AUTHENTICATED
U.S. GOVERNMENT
INFORMATION
GPO

code of federal regulations

Transportation

49

PARTS 200 TO 399

Revised as of October 1, 1997

CONTAINING
A CODIFICATION OF DOCUMENTS
OF GENERAL APPLICABILITY
AND FUTURE EFFECT

AS OF OCTOBER 1, 1997

With Ancillaries

Published by
the Office of the Federal Register
National Archives and Records
Administration

as a Special Edition of
the Federal Register

U.S. GOVERNMENT PRINTING OFFICE
WASHINGTON : 1997

For sale by U.S. Government Printing Office
Superintendent of Documents, Mail Stop: SSOP, Washington, DC 20402–9328

Table of Contents

	Page
Explanation	v
Title 49:	
Subtitle B—Other Regulations Relating to Transportation—(Continued):	
Chapter II—Federal Railroad Administration, Department of Transportation	5
Chapter III—Federal Highway Administration, Department of Transportation	515
Finding Aids:	
Material Approved for Incorporation by Reference	903
Table of CFR Titles and Chapters	905
Alphabetical List of Agencies Appearing in the CFR	921
List of CFR Sections Affected	931

Cite this Code: CFR

To cite the regulations in this volume use title, part and section number. Thus, 49 CFR 200.1 *refers to title 49, part 200, section 1.*

Explanation

The Code of Federal Regulations is a codification of the general and permanent rules published in the Federal Register by the Executive departments and agencies of the Federal Government. The Code is divided into 50 titles which represent broad areas subject to Federal regulation. Each title is divided into chapters which usually bear the name of the issuing agency. Each chapter is further subdivided into parts covering specific regulatory areas.

Each volume of the Code is revised at least once each calendar year and issued on a quarterly basis approximately as follows:

Title 1 through Title 16.....as of January 1
Title 17 through Title 27.....as of April 1
Title 28 through Title 41.....as of July 1
Title 42 through Title 50.....as of October 1

The appropriate revision date is printed on the cover of each volume.

LEGAL STATUS

The contents of the Federal Register are required to be judicially noticed (44 U.S.C. 1507). The Code of Federal Regulations is prima facie evidence of the text of the original documents (44 U.S.C. 1510).

HOW TO USE THE CODE OF FEDERAL REGULATIONS

The Code of Federal Regulations is kept up to date by the individual issues of the Federal Register. These two publications must be used together to determine the latest version of any given rule.

To determine whether a Code volume has been amended since its revision date (in this case, October 1, 1997), consult the ''List of CFR Sections Affected (LSA),'' which is issued monthly, and the ''Cumulative List of Parts Affected,'' which appears in the Reader Aids section of the daily Federal Register. These two lists will identify the Federal Register page number of the latest amendment of any given rule.

EFFECTIVE AND EXPIRATION DATES

Each volume of the Code contains amendments published in the Federal Register since the last revision of that volume of the Code. Source citations for the regulations are referred to by volume number and page number of the Federal Register and date of publication. Publication dates and effective dates are usually not the same and care must be exercised by the user in determining the actual effective date. In instances where the effective date is beyond the cutoff date for the Code a note has been inserted to reflect the future effective date. In those instances where a regulation published in the Federal Register states a date certain for expiration, an appropriate note will be inserted following the text.

OMB CONTROL NUMBERS

The Paperwork Reduction Act of 1980 (Pub. L. 96–511) requires Federal agencies to display an OMB control number with their information collection request.

Many agencies have begun publishing numerous OMB control numbers as amendments to existing regulations in the CFR. These OMB numbers are placed as close as possible to the applicable recordkeeping or reporting requirements.

OBSOLETE PROVISIONS

Provisions that become obsolete before the revision date stated on the cover of each volume are not carried. Code users may find the text of provisions in effect on a given date in the past by using the appropriate numerical list of sections affected. For the period before January 1, 1986, consult either the List of CFR Sections Affected, 1949–1963, 1964–1972, or 1973–1985, published in seven separate volumes. For the period beginning January 1, 1986, a ''List of CFR Sections Affected'' is published at the end of each CFR volume.

INCORPORATION BY REFERENCE

What is incorporation by reference? Incorporation by reference was established by statute and allows Federal agencies to meet the requirement to publish regulations in the Federal Register by referring to materials already published elsewhere. For an incorporation to be valid, the Director of the Federal Register must approve it. The legal effect of incorporation by reference is that the material is treated as if it were published in full in the Federal Register (5 U.S.C. 552(a)). This material, like any other properly issued regulation, has the force of law.

What is a proper incorporation by reference? The Director of the Federal Register will approve an incorporation by reference only when the requirements of 1 CFR part 51 are met. Some of the elements on which approval is based are:

(a) The incorporation will substantially reduce the volume of material published in the Federal Register.

(b) The matter incorporated is in fact available to the extent necessary to afford fairness and uniformity in the administrative process.

(c) The incorporating document is drafted and submitted for publication in accordance with 1 CFR part 51.

Properly approved incorporations by reference in this volume are listed in the Finding Aids at the end of this volume.

What if the material incorporated by reference cannot be found? If you have any problem locating or obtaining a copy of material listed in the Finding Aids of this volume as an approved incorporation by reference, please contact the agency that issued the regulation containing that incorporation. If, after contacting the agency, you find the material is not available, please notify the Director of the Federal Register, National Archives and Records Administration, Washington DC 20408, or call (202) 523–4534.

CFR INDEXES AND TABULAR GUIDES

A subject index to the Code of Federal Regulations is contained in a separate volume, revised annually as of January 1, entitled CFR INDEX AND FINDING AIDS. This volume contains the Parallel Table of Statutory Authorities and Agency Rules (Table I), and Acts Requiring Publication in the Federal Register (Table II). A list of CFR titles, chapters, and parts and an alphabetical list of agencies publishing in the CFR are also included in this volume.

An index to the text of ''Title 3—The President'' is carried within that volume.

The Federal Register Index is issued monthly in cumulative form. This index is based on a consolidation of the ''Contents'' entries in the daily Federal Register.

A List of CFR Sections Affected (LSA) is published monthly, keyed to the revision dates of the 50 CFR titles.

REPUBLICATION OF MATERIAL

There are no restrictions on the republication of material appearing in the Code of Federal Regulations.

INQUIRIES

For a legal interpretation or explanation of any regulation in this volume, contact the issuing agency. The issuing agency's name appears at the top of odd–numbered pages.

For inquiries concerning CFR reference assistance, call 202–523–5227 or write to the Director, Office of the Federal Register, National Archives and Records Administration, Washington, DC 20408.

SALES

The Government Printing Office (GPO) processes all sales and distribution of the CFR. For payment by credit card, call 202–512–1800, M–F, 8 a.m. to 4 p.m. e.s.t. or fax your order to 202–512–2233, 24 hours a day. For payment by check, write to the Superintendent of Documents, Attn: New Orders, P.O. Box 371954, Pittsburgh, PA 15250–7954. For GPO Customer Service call 202–512–1803.

RAYMOND A. MOSLEY,
Director,
Office of the Federal Register.

October 1, 1997.

THIS TITLE

Title 49—TRANSPORTATION is composed of seven volumes. The parts in these volumes are arranged in the following order: Parts 1–99, parts 100–185, parts 186–199, parts 200–399, parts 400–999, parts 1000–1199, part 1200 to End. The first volume (parts 1–99) contains current regulations issued under subtitle A—Office of the Secretary of Transportation; the second volume (parts 100–185) and the third volume (parts 186–199) contain the current regulations issued under chapter I—Research and Special Programs Administration (DOT); the fourth volume (parts 200–399) contains the current regulations issued under chapter II—Federal Railroad Administration (DOT), and chapter III—Federal Highway Administration (DOT); the fifth volume (parts 400–999) contains the current regulations issued under chapter IV—Coast Guard (DOT), chapter V—National Highway Traffic Safety Administration (DOT), chapter VI—Federal Transit Administration (DOT), chapter VII—National Railroad Passenger Corporation (AMTRAK), and chapter VIII—National Transportation Safety Board; the sixth volume (parts 1000–1199) and the seventh volume (part 1200 to End) both contain current regulations issued under chapter X—Surface Transportation Board, Department of Transportation. The contents of these volumes represent all current regulations codified under this title of the CFR as of October 1, 1997.

In the volume containing parts 100–185, see § 172.101 for the Hazardous Materials Table, and § 172.102 for the Optional Hazardous Materials Table. An Identification Number Cross Reference Index to Proper Shipping Names in §§ 172.101 and 172.102 appears at the beginning of part 172. The Federal Motor Vehicle Safety Standards appear in part 571.

Redesignation tables for chapter X—Surface Transportation Board, Department of Transportation appear in the Finding Aids section of the sixth and seventh volumes.

For this volume, Ann Elise Maso was the Chief Editor. The Code of Federal Regulations publication program is under the direction of Frances D. McDonald, assisted by Alomha S. Morris.

Would you like to know. . .

if any changes have been made to the *Code of Federal Regulations* or what documents have been published in the *Federal Register* without reading the *Federal Register* every day? If so, you may wish to subscribe to the *LSA* (List of CFR Sections Affected), the *Federal Register Index,* or both.

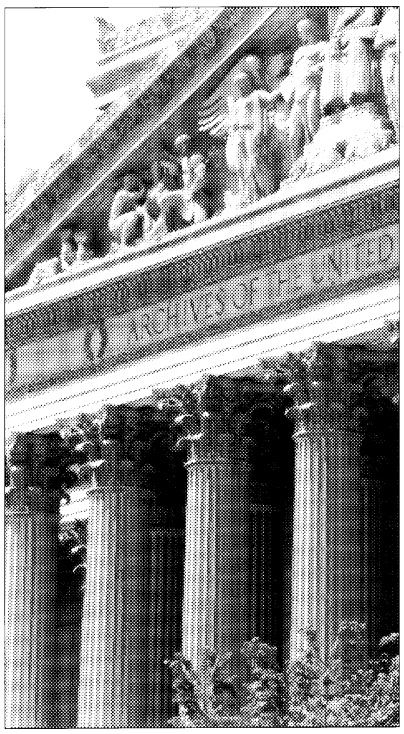

LSA

The *LSA* (List of CFR Sections Affected) is designed to lead users of the *Code of Federal Regulations* to amendatory actions published in the *Federal Register*. The *LSA* is issued monthly in cumulative form. Entries indicate the nature of the changes—such as revised, removed, or corrected.
$27 per year.

Federal Register Index

The index, covering the contents of the daily *Federal Register,* is issued monthly in cumulative form. Entries are carried primarily under the names of the issuing agencies. Significant subjects are carried as cross-references.
$25 per year.

A finding aid is included in each publication which lists *Federal Register* page numbers with the date of publication in the *Federal Register.*

Superintendent of Documents Subscription Order Form

Order Processing Code:
***5421**

❑ **YES,** send me the following indicated subscriptions for one year:

____ **LSA (List of CFR Sections Affected),** (LCS) for $27 per year.

____ **Federal Register Index** (FRSU) $25 per year.

The total cost of my order is $ _____
Price is subject to change. International customers please add 25%.

(Includes regular shipping and handling.)

For privacy check box below:

❑ Do not make my name available to other mailers

Check method of payment:

❑ Check payable to Superintendent of Documents

❑ GPO Deposit Account ☐☐☐☐☐☐☐ — ☐

❑ VISA ❑ MasterCard ☐☐☐☐ (expiration date)

Company or personal name

Street address

City, State, ZIP code

Daytime phone with area code

Purchase order No. (optional)

Credit card No. (must be 20 digits)

Thank you for your order!

Authorizing signature 1/97

Fax your orders (202) 512–2250
Phone your orders (202) 512–1800

Mail To: Superintendent of Documents
PO Box 371954
Pittsburgh PA 15250–7954

Title 49—Transportation

(This book contains parts 200 to 399)

Part

SUBTITLE B—OTHER REGULATIONS RELATING TO TRANSPORTATION—(CONTINUED)

CHAPTER II—Federal Railroad Administration, Department of Transportation 200

CHAPTER III—Federal Highway Administration, Department of Transportation 301

Subtitle B—Other Regulations Relating To Transportation (Continued)

CHAPTER II—FEDERAL RAILROAD ADMINISTRATION, DEPARTMENT OF TRANSPORTATION

Part		*Page*
200	Informal rules of practice for passenger service	7
201	Formal rules of practice for passenger service	9
207	Railroad police officers	15
209	Railroad safety enforcement procedures	16
210	Railroad noise emission compliance regulations	52
211	Rules of practice	58
212	State safety participation regulations	65
213	Track safety standards	76
214	Railroad workplace safety	89
215	Railroad freight car safety standards	111
216	Special notice and emergency order procedures: Railroad track, locomotive and equipment	125
217	Railroad operating rules	128
218	Railroad operating practices	132
219	Control of alcohol and drug use	145
220	Radio standards and procedures	223
221	Rear end marking device—passenger, commuter and freight trains	229
223	Safety glazing standards—locomotives, passenger cars and cabooses	234
225	Railroad accidents/incidents: Reports classification, and investigations	239
228	Hours of service of railroad employees	256
229	Railroad locomotive safety standards	269
230	Locomotive inspection	292
231	Railroad safety appliance standards	293
232	Railroad power brakes and drawbars	334
233	Signal systems reporting requirements	349
234	Grade crossing signal system safety	350
235	Instructions governing applications for approval of a discontinuance or material modification of a signal system or relief from the requirements of part 236	361

Part		*Page*
236	Rules, standards, and instructions governing the installation, inspection, maintenance, and repair of signal and train control systems, devices, and appliances	365
240	Qualification and certification of locomotive engineers	401
245	Railroad user fees	442
250	Guarantee of certificates of trustees of railroads in reorganization	447
256	Financial assistance for railroad passenger terminals	452
260	Regulations governing section 511 of the Railroad Revitalization and Regulatory Reform Act of 1976, as amended	462
265	Nondiscrimination in federally assisted railroad programs	487
266	Assistance to States for local rail service under section 5 of the Department of Transportation Act	498

PART 200—INFORMAL RULES OF PRACTICE FOR PASSENGER SERVICE

Sec.
200.1 General.
200.3 Definitions.
200.5 Applications.
200.7 Objections.
200.9 Hearings.
200.11 Orders, approvals, and determinations.
200.13 Publication.

AUTHORITY: Secs. 402(e) and 406 of Pub. L. 91–518, 84 Stat. 1327, as amended by sec. 10(2) of Pub. L. 93–146, 87 Stat. 548 and sec. 121 of Pub. L. 96–73, 93 Stat. 537 (45 U.S.C. 562(e), 566); 49 CFR 1.49.

SOURCE: 45 FR 64192, Sept. 29, 1980, unless otherwise noted.

§ 200.1 General.

This part prescribes procedures under which applications will be received and heard and by which rules and orders will be issued under subsection 402(e) and section 406 of the Rail Passenger Service Act (45 U.S.C. 562(e) and 566).

§ 200.3 Definitions.

(a) *Act* means the Rail Passenger Service Act (45 U.S.C. 500 *et seq.*).

(b) *Administrator* means the Federal Railroad Administrator, the Deputy Administrator of FRA, or the delegate of either.

(c) *Amtrak* means the National Railroad Passenger Corporation.

(d) *Amtrak trains* means trains operated by or on behalf of Amtrak.

(e) *Chief Counsel* means the Chief Counsel or Acting Chief Counsel of the FRA.

(f) *Downgrading of a facility* means a reduction in track classification as specified in FRA track safety standards (49 CFR part 213), or any other change in facilities which may increase the time required for a passenger train to operate over the route on which such facility is located.

(g) *Facility* means railroad tracks, right-of-way, fixed equipment and facilities, real-property appurtenant thereto, and includes signal systems, passenger station and repair tracks, station buildings, platforms, and adjunct facilities such as water, fuel, steam, electric, and air lines.

(h) *FRA* means the Federal Railroad Administration.

(i) *Railroad* means a person providing railroad transportation for compensation.

(j) *Shipper* means a person contracting with one or more railroads for freight transportation.

§ 200.5 Applications.

(a) Each application and objection under this part shall be submitted in writing to: Docket Clerk, Office of the Chief Counsel, Federal Railroad Administration, 400 7th Street, SW., Washington, DC 20590.

(b) Any procedural issues arising from the submission or consideration of applications under this part, such as timeliness and adequacy, shall be heard and decided by the Administration's panel established under § 200.9.

(c) Any railroad adversely affected by the preference requirement of subsection 402(e) of the Act may apply to the Administrator for an order altering that requirement. Each application shall:

(1) List by endpoints the routes that are so affected; and

(2) Explain for every route listed how the preference requirement of subsection 402(e) will materially lessen the quality of freight service afforded by the applicant to its shippers, including information, data or documents sufficient to support that explanation; and

(3) Include an analysis of whether and by how much Amtrak's compensation to the railroad should be reduced if the preference requirement is altered.

(d) In accordance with section 406 of the Act, any railroad may apply to the Administrator for approval to downgrade or dispose of its facilities. Each application shall:

(1) List the facilities for proposed downgrading or disposal;

(2) Describe and give the location of each such facility and identify the most recent passenger service that made use of such facilities; and

(3) Contain for each facility an analysis of the costs the railroad could avoid if it were not required to maintain or

retain the facility in the condition requested by Amtrak, including information, data and documents sufficient to support the analysis.

(e) In addition to the data provided with their applications, applicants shall furnish the Administrator with any other information that the Administrator finds necessary in order to make the determinations required by the Act.

(f) Each applicant shall promptly notify, by registered or certified mail, any party affected by any application, whether Amtrak or a railroad, of the submission of such application under this part, and shall provide a copy of the application with such notice. An official United States Postal Service receipt from the registered or certified mailing constitutes prima facie evidence of notice.

§ 200.7 Objections.

(a) Amtrak or any other party shall have 30 days from the date an application is received by FRA pursuant to section 402(e) of the Act to object to the proposed alteration of the preference requirement. Such objections shall be in writing and shall reference, by date, railroad, and former passenger routes, the application to which it pertains.

(b) Amtrak shall have 30 days from the date an application is received by FRA pursuant to section 406 of the Act to object to any or all of the facility downgradings or disposals proposed in such application. Such objections shall be in writing and shall reference, by date, railroad, and former passenger routes, the application to which it pertains and shall list, by facility description and location, the specific downgradings or disposals to which Amtrak objects.

§ 200.9 Hearings.

(a) Pursuant to any application under this part, a prehearing conference will be held if found necessary or desirable by the Administrator.

(b) Pursuant to any application under this part, an oral hearing will be held if required by statute or if found necessary or desirable by the Administrator.

(c) Hearings shall be conducted by a panel designated by the Administrator, consisting of three FRA employees, including the Chief Counsel or a member of his or her staff who shall serve as chairman of the panel and the Associate Administrator for Intercity Programs or his or her delegate.

(d) Hearings shall be informal fact-finding proceedings, limited to the issues identified by the panel. Sections 556 and 557 of title 5, U.S.C., shall not apply.

(e) All direct evidence shall be reduced to writing and submitted to the Docket Clerk thirty days in advance of the hearing unless this requirement is expressly waived by the panel. Copies shall be furnished to all parties concurrently with the submission to the Docket Clerk.

(f) The panel may provide for oral presentations and cross-examination, and shall apply rules of evidence as it finds necessary.

(g) To the extent deemed appropriate by the panel, interested persons, including members of the public, may participate in the hearings through the submission of written data, oral presentations, or arguments.

§ 200.11 Orders, approvals, and determinations.

(a) The Administrator shall promptly approve the downgrading or disposal of any facility to which Amtrak does not submit a timely objection under this part.

(b) Orders, approvals, and determinations issued by the Administrator's panel under this part constitute the Administrator's action and shall be final.

(c) Determinations under this part are not required to be based exclusively on the record of a hearing.

§ 200.13 Publication.

(a) General notice of any hearing under this subpart shall be published in the FEDERAL REGISTER not less than 10 days before the hearing, and shall include (1) a statement of the time, place, and nature of the hearing, (2) a reference to the legal authority under which the hearing is being held and (3) a description of the subject and issues involved.

(b) Any order, approval, or determination resulting from any hearing held under this part shall be published in the FEDERAL REGISTER.

PART 201—FORMAL RULES OF PRACTICE FOR PASSENGER SERVICE

Sec.
201.1 General.
201.3 Definitions.
201.4 Scope of regulations.
201.5 Applications.
201.6 Notice of hearing.
201.7 Notification by interested persons.
201.8 Presiding officer.
201.9 Direct testimony submitted as written documents.
201.10 Mailing address.
201.11 Inspection and copying of documents.
201.12 Ex parte communications.
201.13 Prehearing conference.
201.14 Final agenda of the hearing.
201.15 Determination to cancel the hearing.
201.16 Rebuttal testimony and new issues of fact in final agenda.
201.17 Waiver of right to participate.
201.18 Conduct of the hearing.
201.19 Direct testimony.
201.20 Cross-examination.
201.21 Oral and written arguments.
201.22 Recommended decision, certification of the transcript, and submission of comments on the recommended decision.
201.23 Administrator's decision.

AUTHORITY: Secs. 402(f) and (h) of Pub. L. 91–518, 84 Stat. 1327, as amended by sec. 10(2) of Pub. L. 93–146, 87 Stat. 548 and sec. 216 of Pub. L 96–254, 94 Stat. 418 (45 U.S.C. 562 (f) and (h)); sec. 1.49 of Title 49, Code of Federal Regulations.

SOURCE: 46 FR 2614, Jan. 12, 1981, unless otherwise noted.

§201.1 General.

This part prescribes procedures under which applications will be received and heard and by which rules and orders will be issued under subsections 402(f) and (h) of the Rail Passenger Service Act (45 U.S.C. 562 (f) and (h)).

§201.3 Definitions.

(a) The definitions set forth in §200.3 shall apply to this part.

(b) The following definitions shall also apply to this part:

(1) *Party* means—

(i) The Administrator or his representative; or

(ii) A person who has notified the Administrator by specified dates of his or her intent to participate in the hearing pursuant to §§201.7 and 201.16(b).

(2) *Witness* means any person who submits written direct testimony on an application to the Secretary under this part. A person may be both a party and a witness.

§201.4 Scope of regulations.

The procedural regulations in this part govern the practice and procedure in hearings held under subsections 402(f) and (h) of the Act. These hearings will be governed by the provisions of 5 U.S.C. 556 and 557 of the Administrative Procedure Act. The regulations shall be construed to secure the just, speedy, and inexpensive determination of all issues raised with respect to any proposal to increase speeds or to add trains pursuant to subsections 402(f) and (h) of the Act with full protection for the rights of all persons affected thereby.

§201.5 Applications.

(a) Each application and objection under this part shall be submitted in writing to: Docket Clerk, Office of the Chief Counsel, Federal Railroad Administration, 400 7th Street, SW., Washington, DC 20590.

(b) Any procedural issues arising from the submission or consideration of applications under this part, such as timeliness and adequacy, shall be heard and decided by the presiding officer appointed under §201.8.

(c) In accordance with subsection 402(f) of the Act, Amtrak may apply to the Administrator for an order requiring a railroad to permit accelerated speeds by Amtrak trains. Each application shall:

(1) List by endpoints the routes for which Amtrak desires such acceleration;

(2) Not list routes of more than one railroad;

(3) Indicate by route and train the maximum speeds for Amtrak trains permitted by the railroad and the maximum speeds desired by Amtrak;

(4) Indicate for each route listed the track classification as specified in FRA track safety standards (49 CFR part 213); and

(5) Explain why the maximum speeds Amtrak desires are safe and practicable, or what track, signal system, or other facility improvements would make such speeds safe and practicable.

(d) In accordance with subsection 402(h) of the Act, Amtrak may apply to the Administrator for an order to require a railroad to permit or provide the operation of additional passenger trains on its rail lines. Each application shall:

(1) List the railroad, the endpoints of the proposed additional train or trains, and the proposed schedule for such additional train or trains, and

(2) Describe and give the background of all prior efforts and negotiations to obtain a satisfactory voluntary agreement with the railroad for the operation of the proposed additional train or trains.

(e) In addition to the data provided with their applications, applicants shall furnish the Administrator with any other information that the Administrator finds necessary in order to make the determinations required by the Act.

(f) Each applicant shall promptly notify, by registered or certified mail, any party affected by any application, whether Amtrak or a railroad, of the submission of each application under this part, and shall provide a copy of the application with such notice. An official U. S. Postal Service return receipt from the registered or certified mailing constitutes prima facie evidence of notice.

§ 201.6 Notice of hearing.

(a) A notice of hearing on an application shall be published in the FEDERAL REGISTER.

(b) The notice shall state:

(1) The nature of the hearing;

(2) The place and date of the hearing. The date shall not be less than 60 days after publication of notice of the hearing;

(3) The legal authority under which the hearing is to be held;

(4) Issues of fact which may be involved in the hearing;

(5) If a draft Environmental Impact Statement is required, the date of publication of the draft and the place(s) where the draft and comments thereon may be viewed and copied;

(6) The place(s) where records and submitted direct testimony will be kept for public inspection;

(7) The final date for filing a notice of intent to participate in the hearing;

(8) The final date for submission of direct testimony on the application, and the number of copies required;

(9) The docket number assigned to the case, which shall be used in all subsequent proceedings; and

(10) The place and date of the prehearing conference.

§ 201.7 Notification by interested persons.

Any person desiring to participate as a party shall notify the Administrator, by registered or certified mail, on or before the date specified in the notice.

§ 201.8 Presiding officer.

(a) Upon publication of the notice of hearing pursuant to § 201.6, the Administrator shall appoint a presiding officer pursuant to 5 U.S.C. 3105. No individual who has any conflict of interest, financial or otherwise, shall serve as presiding officer in such proceeding.

(b) The presiding officer, in any proceeding under this part, shall have power to:

(1) Change the time and place of the hearing and adjourn the hearing;

(2) Evaluate direct testimony submitted pursuant to these regulations, make a preliminary determination of the issues, conduct a prehearing conference to determine the issues for the hearing agenda, and cause to be published in the FEDERAL REGISTER a final hearing agenda;

(3) Rule upon motions, requests, and admissibility of direct testimony;

(4) Administer oaths and affirmations, question witnesses, and direct witnesses to testify;

(5) Modify or waive any rule (after notice) upon determining that no party will be prejudiced;

(6) Receive written comments and hear oral agruments;

(7) Render a recommended decision; and

(8) Do all acts and take all measures, including regulation of media coverage, for the maintenance of order at

and the efficient conduct of the proceeding.

(c) In case of the absence of the original presiding officer or his inability to act, the Administrator may assign to a successor the powers and duties of the original presiding officer without abatement of the proceeding unless otherwise ordered by the Administrator.

(d) The presiding officer may upon his own motion withdraw as presiding officer in a proceeding if he deems himself to be disqualified.

(e) A presiding officer may be requested to withdraw at any time prior to the recommended decision. Upon the filing by an interested person in good faith of a timely and sufficient affidavit alleging the presiding officer's personal bias, malice, conflict of interest, or other basis which might result in prejudice to a party, the hearing shall recess. The Administrator shall immediately act upon such allegation as a part of the record and decision in the proceeding, after making such investigation or holding such hearings, or both, as he may deem appropriate in the circumstances.

§201.9 Direct testimony submitted as written documents.

(a) Unless otherwise specified, all direct testimony, including accompanying exhibits, shall be submitted to the presiding officer in writing no later than the dates specified in the notice of the hearing, the final hearing agenda, or within 15 days after the conclusion of the prehearing conference, as the case may be. All direct testimony shall be in affidavit form, and exhibits constituting part of such testimony, referred to in the affidavit and made a part thereof, shall be attached to the affidavit. Direct testimony submitted with exhibits shall state the issue to which the exhibit relates; if no such statement is made, the presiding officer shall determine the relevance of the exhibit to the issues published in the FEDERAL REGISTER.

(b) The direct testimony submitted shall contain:

(1) A concise statement of the witness' interest in the proceeding and his position regarding the issues presented. If the direct testimony is presented by a witness who is not a party, the witness shall state his relationship to the party;

(2) Facts that are relevant and material; and

(3) Any proposed issues of fact not stated in the notice of the hearing and the reason(s) why such issues should be considered at the hearing.

(c) Ten copies of all direct testimony shall be submitted unless the notice of the hearing specifies otherwise.

(d) Upon receipt, direct testimony shall be assigned a number and stamped with that number and the docket number.

(e) Contemporaneous with the publication of the notice of hearing, Amtrak's direct testimony in support of its application shall be available for public inspection as specified in the notice of hearing. Amtrak may submit additional direct testimony during the time periods allowed for submission of such testimony by witnesses.

§201.10 Mailing address.

Unless otherwise specified in the notice of hearing, all direct testimony shall be addressed to the Docket Clerk, Office of the Chief Counsel, Federal Railroad Administration, 400 7th Street, SW., Washington, DC 20590. All affidavits and exhibits shall be clearly marked with the docket number of the proceeding.

§201.11 Inspection and copying of documents.

(a) If confidential financial information is not involved, any document in a file pertaining to any hearing authorized by this part or any document forming part of the record of such a hearing may be inspected or copied in the Office of the Chief Counsel, Federal Railroad Administration, 400 7th Street, SW., Washington, DC 20590, unless the file is in the care and custody of the presiding officer in which case he shall notify the parties as to where and when the record may be inspected.

(b) If confidential financial information is involved, the presiding officer, at his discretion, upon the request of any party, may deny the public inspection and copying of such information.

§ 201.12 Ex parte communications.

(a) After notice of a hearing is published in the FEDERAL REGISTER, all communications, whether oral or written, involving any substantive or procedural issue and directed either to the presiding officer or to the Administrator, without reference to these rules of procedure, shall be deemed ex parte communications and shall not be considered part of the record for decision. A record of oral ex parte communications shall be made by the persons contacted. All written ex parte communications shall be available for public viewing at the places(s) specified in the notice of hearing.

(b) The presiding officer shall not consult any person or party on any fact in issue or on the merits of the matter unless notice and opportunity is given for all parties to participate.

§ 201.13 Prehearing conference.

(a) After an examination of all the direct testimony submitted, the presiding officer shall make a preliminary determination of issues of fact to be addressed at the hearing.

(b) The presiding officer's preliminary determination shall be made available at the place or places provided in the notice of the hearing at least five days before the prehearing conference is held.

(c) The purpose of the prehearing conference shall be to enable the presiding officer to determine, on the basis of the direct testimony submitted and prehearing discussions:

(1) Whether the presiding officer's preliminary determination of issues of fact for the hearing has omitted or misconstrued any significant issues, and

(2) The nature of the interest of each party and which parties' interests are adverse.

(d) Only parties may participate in the prehearing conference. A party may appear in person or be represented by counsel.

(e) Parties who do not appear at the prehearing conference shall be bound by the conference's determinations.

§ 201.14 Final agenda of the hearing.

(a) After the prehearing conference, the presiding officer shall prepare a final agenda which shall be published in the FEDERAL REGISTER within ten days after the conclusion of the conference. A copy of the final agenda shall be mailed to all parties.

(b) The final agenda shall list:

(1) All the issues the hearing shall address, the order in which those issues shall be presented, and the direct testimony submitted on those issues; and

(2) A final date for submission of direct testimony on issues of fact not included in the notice of hearing if such issues are presented.

The final agenda may also specify a final date for submission of direct testimony to rebut testimony previously submitted during the time specified in the notice of the hearing.

(c) The presiding officer shall publish with the final agenda a list of witnesses who may appear at the hearing, a list of parties, the nature of the interest of each party, and which parties' interests are adverse on the issues presented.

§ 201.15 Determination to cancel the hearing.

(a) If the presiding officer concludes that no issues of fact are presented by the direct testimony submitted, he shall publish such conclusion in the FEDERAL REGISTER with a notice that a hearing shall not be held. The notice shall set forth a date for filing written comments on the proposed recommended decision. Written comments may include proposed findings and conclusions, arguments, or briefs.

(b) A person need not be a party to submit written comments.

(c) Promptly after expiration of the period for receiving written comments, the presiding officer shall make a recommended decision based on the record, which in this case shall consist of the testimony, exhibits, and written comments submitted. He shall transfer to the Administrator his recommended decision, the record, and a certificate stating that the record contains all the written direct testimony and comments submitted. The Administrator shall then make a final decision in accordance with these regulations.

§201.16 Rebuttal testimony and new issues of fact in final agenda.

(a) Direct testimony to rebut testimony offered during the time period specified in the notice of hearing may be submitted pursuant to these regulations within fifteen days after the conclusion of the prehearing conference unless the presiding officer otherwise specifies in the final agenda.

(b) If the final agenda presents issues not included in the notice of the hearing published pursuant to §201.6,

(1) Any person interested in participating at the hearing on such issues presented shall notify the Administrator by certified mail of an intent to participate not later than ten days after publication of the final agenda. Such person may present direct testimony or cross-examine witnesses only on such issues presented unless he previously notified the Administrator pursuant to §201.7, and

(2) Additional written direct testimony concerning such issues may be submitted within the time provided in the final agenda. Such direct testimony will comply with the requirements of §201.9.

§201.17 Waiver of right to participate.

Persons who fail to notify the Administrator pursuant to §§201.7 and 201.16 shall be deemed to have waived their right to participate as parties in any part of the hearing.

§201.18 Conduct of the hearing.

(a) The hearing shall be held at the time and place fixed in the notice of hearing, unless the presiding officer changes the time or place. If a change occurs, the presiding officer shall publish the change in the FEDERAL REGISTER and shall expeditiously notify all parties by telephone or by mail; *provided,* that if the change in time or place of hearing is made less than five days before the date previously fixed for the hearing, the presiding officer shall also announce, or cause to be announced, the change at the time and place previously fixed for the hearing.

(b) The presiding officer shall, at the commencement of the hearing, introduce into the record. The notice of hearing as published in the FEDERAL REGISTER; all subsequent notices published in the FEDERAL REGISTER; the draft Environmental Impact Statement if it is required, and the comments thereon and agency responses to the comments; and a list of all parties. Direct testimony shall then be received with respect to the matters specified in the final agenda in such order as the presiding officer shall announce. With respect to direct testimony submitted as rebuttal testimony or in response to new issues presented by the prehearing conference, the presiding officer shall determine the relevance of such testimony.

(c) The hearing shall be publicly conducted and reported verbatim by an offical reporter.

(d) If a party objects to the admission or rejection of any direct testimony or to any other ruling of the presiding officer during the hearing, he shall state briefly the grounds of such objection, whereupon an automatic exception will follow if the objection is overruled by the presiding officer. The transcript shall not include argument or debate thereon except as ordered by the presiding officer. The ruling of the presiding officer on any objection shall be a part of the transcript and shall be subject to review at the same time and in the same manner as the Administrator's final decision. Only objections made before the presiding officer may subsequently be relied upon in the proceedings.

(e) All motions and requests shall be addressed to, and ruled on by, the presiding officer if made prior to his certification of the transcript, or by the Administrator if made thereafter.

§201.19 Direct testimony.

(a) Direct testimony shall be submitted by affidavit as provided in these regulations and introduced at the hearing by a witness in order to be considered part of the record. Such direct testimony shall not be read into evidence but shall become a part of the record subject to exclusion of irrelevant and immaterial parts thereof.

(b) The witness introducing direct testimony shall:

(1) State his name, address, and occupation;

(2) State his qualifications for introducing the direct testimony. If an expert, the witness shall briefly state the scientific or technical training that qualifies him as an expert;

(3) Identify the direct testimony previously submitted in accordance with these regulations; and

(4) Submit to appropriate direct and cross examination. Cross-examination shall be by a party whose interests are adverse to those of the witness on the issue presented if the witness is a party, or adverse to the interests of the party who presented the witness if the witness is not a party.

(c) A party shall be deemed to have waived the right to introduce direct testimony if such party fails to present a witness to introduce the direct testimony.

(d) Offical notice may be taken of such matters as are judicially noticed by the courts of the United States, *provided*, that parties shall be given adequate notice by the presiding officer at the hearing of matters so noticed and shall be given adequate opportunity to show that such facts are inaccurate or are erroneously noticed.

§ 201.20 Cross-examination.

(a) The presiding officer may:

(1) Require the cross-examiner to outline the intended scope of the cross-examination;

(2) Prohibit parties from cross-examining witnesses unless the presiding officer has determined that the cross-examiner has an adverse interest on the facts at issue to the party-witness. For the purposes of this subsection, the Administrator's or his representative's interest shall be considered adverse to all parties;

(3) Limit the number of times any party or parties having a common interest may cross-examine an ''adverse'' witness on the same matter; and

(4) Exclude cross-examination questions that are immaterial, irrelevant, or unduly repetitious.

(b) Any party shall be given an opportunity to appear, either in person or through an authorized counsel or representative, to cross-examine witnesses. Before cross-examining a witness, the party or counsel shall state his name, address, and occupation. If counsel cross-examines the witness, counsel shall state for the record the authority to act as counsel. Cross-examiners shall be assumed to be familiar with the direct testimony.

(c) Any party or party's counsel who fails to appear at the hearing to cross-examine an ''adverse'' witness shall be deemed to have waived the right to cross-examine that witness.

(d) Scientific, technical, or commercial publications may be used only for the limited purpose of impeaching witnesses under cross-examination unless previously submitted and introduced in accordance with these regulations.

§ 201.21 Oral and written arguments.

(a) The presiding officer may, in his discretion, provide for oral argument at the end of the hearing. Such argument, when permitted, may be limited by the presiding officer to the extent necessary for the expeditious disposition of the proceeding.

(b) The presiding officer shall announce at the hearing a reasonable period of time within which any interested person may file with the presiding officer any written comments on the application, including proposed findings and conclusions or written arguments or brief based upon the record, citing where practicable the relevant page or pages of the transcript. If a party filing a brief desires the presiding officer to reconsider any objection made by such party to a ruling of the presiding officer, he shall specifically identify such rulings by reference to the pertinent pages of the transcript and shall state his arguments thereon as a part of the brief.

(c) Oral or written arguments shall be limited to issues arising from direct testimony on the record.

§ 201.22 Recommended decision, certification of the transcript, and submission of comments on the recommended decision.

(a) Promptly after expiration of the period for receiving written briefs, the presiding officer shall make a recommended decision based on the record and transmit the decision to the Administrator. The recommended decision shall include:

(1) A statement containing a description of the history of the proceedings;

(2) Findings on issues of fact with the reasons therefor; and

(3) Rulings on issues of law.

(b) The presiding officer shall also transmit to the Administrator the transcript of the hearing, the original and all copies of the direct testimony, and written comments. The presiding officer shall attach to the original transcript of the hearing a certificate stating that, to the best of his knowledge and belief, the transcript is a true transcript of the testimony given at the hearing except in such particulars as are specified.

(c) Immediately after receipt of the recommended decision, the Administrator shall give notice thereof in the FEDERAL REGISTER, send copies of the recommended decision to all parties, and provide opportunity for the submission of comments. The recommended decision may be reviewed and/or copied in the Office of the Chief Counsel, Federal Railroad Administration, 400 7th Street, SW., Washington, DC 20590.

(d) Within twenty days after the notice of receipt of the recommended decision has been published in the FEDERAL REGISTER, any interested person may file with the Administrator any written comments on the recommended decision. All comments shall be submitted during the twenty-day period to the Administrator at the above address.

§201.23 Administrator's decision.

(a) Upon receipt of the recommended decision and transcript and after the twenty-day period for receiving written comments on the recommended decision has passed, the Administrator's decision may affirm, modify, or set aside, in whole or in part, the recommended findings, conclusions, and decision of the presiding officer. The Administrator may also remand the hearing record to the presiding officer for a fuller development of the record.

(b) The Administrator's decision shall include:

(1) A statement containing a description of the history of the proceeding;

(2) Findings on issues of fact with the reasons therefor; and

(3) Rulings on issues of law.

(c) The Administrator's decision shall be published in the FEDERAL REGISTER. If the Amtrak application is approved in whole or in part, the final order shall be promulgated with the decision.

PART 207—RAILROAD POLICE OFFICERS

Sec.
207.1 Application.
207.2 Definitions.
207.3 Designation and commissioning.
207.4 Notice to State officials.
207.5 Authority in States where officer not commissioned.

AUTHORITY: 45 U.S.C. 446; 49 CFR 1.49(ff).

SOURCE: 59 FR 6587, Feb. 11, 1994, unless otherwise noted.

§207.1 Application.

This part applies to all railroads, as such term is defined in section 202(e) of the Federal Railroad Safety Act of 1970, as amended, Public Law 91–458 (45 U.S.C. 431(e)).

§207.2 Definitions.

As used in this part:

(a) *Railroad police officer* means a peace officer who is commissioned in his or her state of legal residence or state of primary employment and employed by a railroad to enforce state laws for the protection of railroad property, personnel, passengers, and/or cargo.

(b) *Commissioned* means that a state official has certified or otherwise designated a railroad employee as qualified under the licensing requirements of that state to act as a railroad police officer in that state.

(c) *Property* means rights-of-way, easements, appurtenant property, equipment, cargo, facilities, and buildings and other structures owned, leased, operated, maintained, or transported by a railroad.

§207.3 Designation and commissioning.

(a) A railroad may designate employees to be commissioned by a state authority as railroad police officers to serve in the states in which the railroad owns property.

(b) The designated railroad police officer shall be commissioned by the railroad police officer's state of legal residence or the railroad police officer's state of primary employment.

§ 207.4 Notice to State officials.

(a) After the designated railroad police officer is commissioned by a state or states, the railroad shall send, by certified mail, written notice to appropriate officials of every other state in which the railroad police officer shall protect the railroad's property, personnel, passengers, and cargo. The notice of commission shall contain the following information:

(1) The name of the railroad police officer;

(2) The badge number, identification number, rank, code, or other identifying information assigned to the railroad police officer;

(3) The date of commission;

(4) The state or states where the railroad police officer is commissioned;

(5) The date the railroad police officer received training or retraining regarding the laws of such state or states;

(6) The name of the railroad official who designated the employee as a railroad police officer; and

(7) Color photographs of the types of badges, identification cards, and other identifying materials the railroad uses to identify its railroad police officers.

(b) The railroad shall keep copies of all such notices at a central location.

(c) The authority set forth in § 207.5 shall be effective upon receipt by such state(s) of written notice conforming to the requirements of this section.

§ 207.5 Authority in States where officer not commissioned.

(a) A railroad police officer who is designated by a railroad and commissioned under the laws of any state is authorized to enforce the laws (as specified in paragraph (b) of this section) of any state in which the railroad owns property and to which the railroad has provided notice in accordance with § 207.4.

(b) Under the authority of paragraph (a) of this section, a railroad police officer may enforce only relevant laws for the protection of—

(1) The railroad's employees, passengers, or patrons;

(2) The railroad's property or property entrusted to the railroad for transportation purposes;

(3) The intrastate, interstate, or foreign movement of cargo in the railroad's possession or in possession of another railroad or non-rail carrier while on the railroad property; and

(4) The railroad movement of personnel, equipment, and materials vital to the national defense.

(c) The authority exercised under this part by an officer for whom the railroad has provided notice in accordance with § 207.4 shall be the same as that of a railroad police officer commissioned under the laws of that state.

(d) The railroad police officer's law enforcement powers shall apply only on railroad property, except that an officer may pursue off railroad property a person suspected of violating the law on railroad property, and an officer may engage off railroad property in law enforcement activities, including, without limitation, investigation and arrest, if permissible under state law.

PART 209—RAILROAD SAFETY ENFORCEMENT PROCEDURES

Subpart A—General

Sec.
209.1 Purpose.
209.3 Definitions.
209.5 Service.
209.6 Requests for admission.
209.7 Subpoenas; witness fees.
209.8 Depositions in formal proceedings.
209.9 Filing.
209.11 Request for confidential treatment.
209.13 Consolidation.
209.15 Rules of evidence.
209.17 Motions.

Subpart B—Hazardous Materials Penalties

CIVIL PENALTIES

209.101 Civil penalties generally.
209.103 Minimum and maximum penalties.
209.105 Notice of probable violation.
209.107 Reply.
209.109 Payment of penalty; compromise.
209.111 Informal response and assessment.
209.113 Request for hearing.
209.115 Hearing.
209.117 Presiding officer's decision.
209.119 Assessment considerations.
209.121 Appeal.

CRIMINAL PENALTIES

209.131 Criminal penalties generally.
209.133 Referral for prosecution.

Subpart C—Compliance Orders

209.201 Compliance orders generally.
209.203 Notice of investigation.
209.205 Reply.
209.207 Consent order.
209.209 Hearing.
209.211 Presiding officer's decision.
209.213 Appeal.
209.215 Time limitation.

Subpart D—Disqualification Procedures

209.301 Purpose and scope.
209.303 Coverage.
209.305 Notice of proposed disqualification.
209.307 Reply.
209.309 Informal response.
209.311 Request for hearing.
209.313 Discovery.
209.315 Subpoenas.
209.317 Official record.
209.319 Prehearing conference.
209.321 Hearing.
209.323 Initial decision.
209.325 Finality of decision.
209.327 Appeal.
209.329 Assessment considerations.
209.331 Enforcement of disqualification order.
209.333 Prohibitions.
209.335 Penalties.
209.337 Information collection.

Subpart E—Reporting of Remedial Actions

209.401 Purpose and scope.
209.403 Applicability.
209.405 Reporting of remedial actions.
209.407 Delayed reports.
209.409 Penalties.

APPENDIX A TO PART 209—INTERIM STATEMENT OF AGENCY POLICY CONCERNING ENFORCEMENT OF THE FEDERAL RAILROAD SAFETY LAWS

APPENDIX B TO PART 209—FEDERAL RAILROAD ADMINISTRATION GUIDELINES FOR INITIAL HAZARDOUS MATERIALS ASSESSMENTS

AUTHORITY: 49 U.S.C. Chs. 51, 57, and 201–213; 49 CFR 1.49.

SOURCE: 42 FR 56742, Oct. 28, 1977, unless otherwise noted.

Subpart A—General

§209.1 Purpose.

Appendix A to this part contains a statement of agency policy concerning enforcement of those laws. This part describes certain procedures employed by the Federal Railroad Administration in its enforcement of statutes and regulations related to railroad safety. By delegation from the Secretary of Transportation, the Administrator has responsibility for:

(a) Enforcement of subchapters B and C of chapter I, subtitle B, title 49, CFR, with respect to the transportation or shipment of hazardous materials by railroad (49 CFR 1.49(s));

(b) Exercise of the authority vested in the Secretary by the Federal Railroad Safety Act of 1970, 45 U.S.C. 421, 431–441, as amended by the Rail Safety Improvement Act of 1988, Public Law 100–342 (June 22, 1988) (49 CFR 1.49(m)); and

(c) Exercise of the authority vested in the Secretary pertaining to railroad safety as set forth in the statutes transferred to the Secretary by section 6(e) of the Department of Transportation Act, 49 App. U.S.C. 1655(e) (49 CFR 1.49 (c), (d), (f), and (g)).

[42 FR 56742, Oct. 28, 1977, as amended at 53 FR 52920, Dec. 29, 1988; 54 FR 42905, Oct. 18, 1989]

§209.3 Definitions.

As used in this part—

Administrator means the Administrator of FRA, the Deputy Administrator of FRA, or the delegate of either.

Chief Counsel means the Chief Counsel of FRA or his or her delegate.

Day means calendar day.

Federal railroad safety laws means the provisions of law generally at 49 U.S.C. subtitle V, part A or 49 U.S.C. chap. 51 or 57 and the rules, regulations, orders, and standards issued under any of those provisions. See Pub. L. 103–272 (1994). Before recodification, these statutory provisions were contained in the following statutes: (i) the Federal Railroad Safety Act of 1970 (Safety Act) (49 U.S.C. 20101–20117, 20131, 20133–20141, 20143, 21301, 21302, 21304, 21311, 24902, and 24905, and sections 4(b)(1), (i), and (t) of Pub. L. 103–272, formerly codified at 45 U.S.C. 421, 431 *et seq.*); (ii) the Hazardous Materials Transportation Act (Hazmat Act) (49 U.S.C. 5101 *et seq.*, formerly codified at 49 App. U.S.C. 1801 *et seq.*); (iii) the Sanitary Food Transportation Act of 1990 (SFTA) (49 U.S.C. 5713, formerly codified at 49 App. U.S.C.

2801 (note)); and those laws transferred to the jurisdiction of the Secretary of Transportation by subsection (e)(1), (2), and (6)(A) of section 6 of the Department of Transportation Act (DOT Act), as in effect on June 1, 1994 (49 U.S.C. 20302, 21302, 20701–20703, 20305, 20502–20505, 20901, 20902, and 80504, formerly codified at 49 App. U.S.C. 1655(e)(1), (2), and (6)(A)). 49 U.S.C. 20111 and 20109, formerly codified at 45 U.S.C. 437 (note) and 441(e). Those laws transferred by the DOT Act include, but are not limited to, the following statutes: (i) the Safety Appliance Acts (49 U.S.C. 20102, 20301, 20302, 20304, 21302, and 21304, formerly codified at 45 U.S.C. 1–14, 16); (ii) the Locomotive Inspection Act (49 U.S.C. 20102, 20701–20703, 21302, and 21304, formerly codified at 45 U.S.C. 22–34); (iii) the Accident Reports Act (49 U.S.C. 20102, 20701, 20702, 20901–20903, 21302, 21304, and 21311, formerly codified at 45 U.S.C. 38–43); (iv) the Hours of Service Act (49 U.S.C. 20102, 21101–21107, 21303, and 21304, formerly codified at 45 U.S.C. 61–64b); and (v) the Signal Inspection Act (49 U.S.C. 20102, 20502–20505, 20902, 21302, and 21304, formerly codified at 49 App. U.S.C. 26).

FRA means the Federal Railroad Administration, U.S. Department of Transportation.

FRA Safety Inspector means an FRA safety inspector, a state inspector participating in railroad safety investigative and surveillance activities under part 212 of this chapter, or any other official duly authorized by FRA.

Motion means a request to a presiding officer to take a particular action.

Person generally includes all categories of entities covered under 1 U.S.C. 1, including but not limited to the following: a railroad; any manager, supervisor, official, or other employee or agent of a railroad; any owner, manufacturer, lessor, or lessee of railroad equipment, track, or facilities; any independent contractor providing goods or services to a railroad; and any employee of such owner, manufacturer, lessor, lessee, or independent contractor; however, *person*, when used to describe an entity that FRA alleges to have committed a violation of the provisions of law formerly contained in the Hazardous Materials Transportation Act or contained in the Hazardous Materials Regulations, has the same meaning as in 49 U.S.C. 5102(9) (formerly codified at 49 App. U.S.C. 1802(11)), *i.e.*, an individual, firm, copartnership, corporation, company, association, joint-stock association, including any trustee, receiver, assignee, or similar representative thereof, or government, Indian tribe, or authority of a government or tribe when offering hazardous material for transportation in commerce or transporting hazardous material to further a commercial enterprise, but such term does not include the United States Postal Service or, for the purposes of 49 U.S.C. 5123–5124 (formerly contained in sections 110 and 111 of the Hazardous Materials Transportation Act and formerly codified at 49 App. U.S.C. 1809–1810), a department, agency, or instrumentality of the Federal Government.

Pleading means any written submission setting forth claims, allegations, arguments, or evidence.

Presiding Officer means any person authorized to preside over any hearing or to make a decision on the record, including an administrative law judge.

Railroad means any form of nonhighway ground transportation that runs on rails or electro-magnetic guideways, including (i) commuter or other short-haul railroad passenger service in a metropolitan or suburban area and commuter railroad service that was operated by the Consolidated Rail Corporation on January 1, 1979; and (ii) high speed ground transportation systems that connect metropolitan areas, without regard to whether those systems use new technologies not associated with traditional railroads; but does not include rapid transit operations in an urban area that are not connected to the general railroad system of transportation.

Respondent means a person upon whom FRA has served a notice of probable violation, notice of investigation, or notice of proposed disqualification.

[59 FR 43676, Aug. 24, 1994]

§ 209.5 Service.

(a) Each order, notice, or other document required to be served under this part shall be served personally or by registered or certified mail, except as otherwise provided herein.

(b) Service upon a person's duly authorized representative constitutes service upon that person.

(c) Service by registered or certified mail is complete upon mailing. An official United States Postal Service receipt from the registered or certified mailing constitutes prima facie evidence of service.

(d) Service of requests for admission and motions may be made by first-class mail, postage prepaid.

(e) Each pleading must be accompanied by a certificate of service specifying how and when service was made.

[42 FR 56742, Oct. 28, 1977, as amended at 54 FR 42906, Oct. 18, 1989]

§209.6 Requests for admission.

(a) A party to any proceeding under subpart B, C, or D of this part may serve upon any other party written requests for the admission of the genuineness of any relevant documents identified within the request, the truth of any relevant matters of fact, and the application of law to the facts as set forth in the request.

(b) Each matter of which an admission is requested shall be deemed to be admitted unless, within 30 days after receipt of the request, the party to whom the request is directed serves upon the party requesting the admission a written answer under oath or objection addressed to the matter, signed by the party.

(c) The sworn answer shall specifically admit or deny the matter or set forth in detail the reasons why the answering party cannot truthfully admit or deny the matter. If an objection is made, the reasons therefor shall be stated.

(d) Any matter admitted under this section is conclusively established unless the presiding official permits withdrawal or amendment of the admission for good cause shown.

(e) Upon motion, the presiding officer may order any party to respond to a request for admission.

[54 FR 42906, Oct. 18, 1989]

§209.7 Subpoenas; witness fees.

(a) The Chief Counsel may issue a subpoena on his or her own initiative in any matter related to enforcement of the railroad safety laws. However, where a proceeding under subpart B, C, or D of this part has been initiated, only the presiding officer may issue subpoenas, and only upon the written request of any party to the proceeding who makes an adequate showing that the information sought will materially advance the proceeding.

(b) A subpoena may require attendance of a witness at a deposition or hearing or the production of documentary or other tangible evidence in the possession or control of the person served, or both.

(c) A subpoena may be served personally by any person who is not an interested person and is not less than eighteen (18) years of age, or by certified or registered mail.

(d) Service of a subpoena shall be made by delivering a copy of the subpoena in the appropriate manner, as set forth below. Service of a subpoena requiring attendance of a person is not complete unless delivery is accompanied by tender of fees for one day's attendance and mileage as specified by paragraph (f) of this section. However, when a subpoena is issued upon the request of any officer or agency of the United States, fees and mileage need not be tendered at the time of service but will be paid by FRA at the place and time specified in the subpoena for attendance.

Delivery of a copy of the subpoena may be made:

(1) To a natural person by:

(i) Handing it to the person;

(ii) Leaving it at his or her office with the person in charge thereof;

(iii) Leaving it at his or her dwelling place or usual place of abode with some person of suitable age and discretion then residing therein;

(iv) Mailing it by registered or certified mail to him or her at his or her last known address; or

(v) Any method whereby actual notice of the issuance and content is given (and the fees are made available) prior to the return date.

(2) To an entity other than a natural person by:

(i) Handing a copy of the subpoena to a registered agent for service or to any officer, director, or agent in charge of any office of the person;

(ii) Mailing it by registered or certified mail to any representative listed in paragraph (d)(2)(i) of this section at his or her last known address; or

(iii) Any method whereby actual notice is given to such representative (and the fees are made available) prior to the return date.

(e) The original subpoena bearing a certificate of service shall be filed in accordance with § 209.9.

(f) A witness subpoenaed by the FRA shall be entitled to the same fees and mileage as would be paid to a witness in a proceeding in the district courts of the United States. See 28 U.S.C. 1821. The witness fees and mileage shall be paid by the person requesting that the subpoena be issued. In an appropriate case, the Chief Counsel or the hearing officer may direct the person requesting issuance of a subpoena for the production of documentary or other tangible evidence to reimburse the responding person for actual costs of producing and/or transporting such evidence.

(g) Notwithstanding the provisions of paragraph (f) of this section, and upon request, witness fees and mileage or the costs of producing other evidence may be paid by the FRA if the official who issued the subpoena determines on the basis of good cause shown that:

(1) The presence of the subpoenaed witness or evidence will materially advance the proceedings; and

(2) The party at whose instance the subpoena was issued would suffer a serious financial hardship if required to pay the witness fees and mileage.

(h) Any person to whom a subpoena is directed may, prior to the time specified therein for compliance, but in no event more than ten (10) days after the date of service of such subpoena, apply in writing to the official who issued the subpoena, or if that person is unavailable, to the Chief Counsel, to quash or modify the subpoena. The application shall contain a brief statement of the reasons relied upon in support of the action sought therein. The issuing official or the Chief Counsel, as the case may be, may:

(1) Deny the application;

(2) Quash or modify the subpoena; or

(3) In the case of subpoena to produce documentary or other tangible evidence, condition denial of the application upon the advancement by the party in whose behalf the subpoena is issued of the reasonable cost of producing the evidence.

(i) If there is a refusal to obey a subpoena served upon any person under the provisions of this section, the FRA may request the Attorney General to seek the aid of the United States District Court for any district in which the person is found to compel that person, after notice, to appear and give testimony, or to appear and produce the subpoenaed documents before the FRA, or both.

(j) Attendance of any FRA employee engaged in an investigation which gave rise to a proceeding under subpart B or C of this part for the purpose of eliciting factual testimony may be assured by filing a request with the Chief Counsel at least fifteen (15) days before the date of the hearing. The request must indicate the present intent of the requesting person to call the employee as a witness and state generally why the witness will be required.

[42 FR 56742, Oct. 28, 1977, as amended at 54 FR 42906, Oct. 18, 1989]

§ 209.8 Depositions in formal proceedings.

(a) Any party to a proceeding under subpart B, C, or D of this part may take the testimony of any person, including a party, by deposition upon oral examination on order of the presiding officer following the granting of a motion under paragraph (b) of this section. Depositions may be taken before any disinterested person who is authorized by law to administer oaths. The attendance of witnesses may be compelled by subpoena as provided in § 209.7 and, for proceedings under subpart D of this part, § 209.315.

(b) Any party desiring to take the deposition of a witness shall file and serve a written motion setting forth the name of the witness; the date, time, and place of the deposition; the subject matter of the witness' expected testimony; whether any party objects to the taking of the deposition; and the reasons for taking such deposition. Such motion shall be granted only upon a showing of good cause. Good

cause exists to take a person's deposition when the information sought is relevant to the subject matter involved in the proceeding and:

(1) The information is not obtainable from some other source that is more convenient, less burdensome, and less expensive; or

(2) The request is not unreasonably cumulative, unduly burdensome, or unduly expensive, taking into account the needs of the case, limitations on the parties' resources, and the importance of the issues in the case.

(c) Such notice as the presiding officer shall order will be given for the taking of a deposition, but this shall not be less than 10 days' written notice unless the parties agree to a shorter period.

(d) Each witness testifying upon deposition shall be sworn and the adverse party shall have the right to cross-examine. The questions propounded and the answers thereto, together with all objections made, shall be reduced to writing, subscribed by the witness, and certified by the reporter.

(e) Depositions taken under this section may be used for discovery, to contradict or impeach the testimony of the deponent as a witness, or as evidence in the proceeding as permitted by paragraph (f) of this section and in accordance with the limitations of Fed. R. Civ. Pro. 32 as though it were applicable to these proceedings.

(f) Subject to such objections to the questions and answers as were noted at the time of taking the deposition and as would be valid were the witness personally present and testifying, such deposition may be offered in evidence by any party to the proceeding.

[54 FR 42906, Oct. 18, 1989]

§209.9 Filing.

All materials filed with FRA or any FRA officer in connection with a proceeding under subpart B, C, or D of this part shall be submitted in duplicate to the Assistant Chief Counsel for Safety, (RCC–30), Office of Chief Counsel, Federal Railroad Administration, 400 Seventh Street, SW., Washington, DC 20590, except that documents produced in accordance with a subpoena shall be presented at the place and time specified by the subpoena.

[54 FR 42906, Oct. 18, 1989]

§209.11 Request for confidential treatment.

(a) This section governs the procedures for requesting confidential treatment of any document filed with or otherwise provided to FRA in connecton with its enforcement of statutes related to railroad safety. For purposes of this section, ''enforcement'' shall include all investigative and compliance activities, in addition to the development of violation reports and recommendations for prosecution.

(b) A request for confidential treatment with respect to a document or portion thereof may be made on the basis that the information is—

(1) Exempt from the mandatory disclosure requirements of the Freedom of Information Act (5 U.S.C. 552);

(2) Required to be held in confidence by 18 U.S.C. 1905; or

(3) Otherwise exempt by law from public disclosure.

(c) Any document containing information for which confidential treatment is requested shall be accompanied at the time of filing by a statement justifying nondisclosure and referring to the specific legal authority claimed.

(d) Any document containing any information for which confidential treatment is requested shall be marked ''CONFIDENTIAL'' or ''CONTAINS CONFIDENTIAL INFORMATION'' in bold letters. If confidentiality is requested as to the entire document, or if it is claimed that nonconfidential information in the document is not reasonably segregable from confidential information, the accompanying statement of justification shall so indicate. If confidentiality is requested as to a portion of the document, then the person filing the document shall file together with the document a second copy of the document from which the information for which confidential treatment is requested has been deleted. If the person filing a document of which only a portion is requested to be held in confidence does not submit a second copy of the document with the confidential information deleted. FRA may assume that there is no objection

to public disclosure of the document in its entirety.

(e) FRA retains the right to make its own determination with regard to any claim of confidentiality. Notice of a decision by the FRA to deny a claim, in whole or in part, and an opportunity to respond shall be given to a person claiming confidentiality of information no less than five days prior to its public disclosure.

§ 209.13 Consolidation.

At the time a matter is set for hearing under subpart B, C, or D of this part, the Chief Counsel may consolidate the matter with any similar matter(s) pending against the same respondent or with any related matter(s) pending against other respondent(s) under the same subpart. However, on certification by the presiding officer that a consolidated proceeding is unmanageable or otherwise undesirable, the Chief Counsel will rescind or modify the consolidation.

[54 FR 42906, Oct. 18, 1989]

§ 209.15 Rules of evidence.

The Federal Rules of Evidence for United States Courts and Magistrates shall be employed as general guidelines for proceedings under subparts B, C, and D of this part. However, all relevant and material evidence shall be received into the record.

[54 FR 42907, Oct. 18, 1989]

§ 209.17 Motions.

Motions shall be in writing, filed with the presiding officer, and copies served upon the parties in accordance with § 209.5, except that oral motions may be made during the course of any hearing or appearance before the presiding officer. Each motion shall state the particular order, ruling, or action desired and the grounds therefor. Unless otherwise specified by the presiding officer, any objection to a written motion must be filed within 10 days after receipt of the motion.

[54 FR 42907, Oct. 18, 1989]

Subpart B—Hazardous Materials Penalties

CIVIL PENALTIES

§ 209.101 Civil penalties generally.

(a) Sections 209.101 through 209.121 prescribe rules of procedure for the assessment of civil penalties pursuant to the Federal hazardous materials transportation safety law, 49 U.S.C. Chapter 51.

(b) When the FRA has reason to believe that a person has knowingly committed an act which is a violation of any provision of subchapter B or C of chapter I, subtitle B of this title for which the FRA exercises enforcement responsibility or any waiver or order issued thereunder, it may conduct a proceeding to assess a civil penalty.

[42 FR 56742, Oct. 28, 1977, as amended at 61 FR 38646, July 25, 1996]

§ 209.103 Minimum and maximum penalties.

A person who knowingly violates a requirement of subchapter A or C of chapter I, Subtitle B of this title is liable for a civil penalty of at least $250 but not more than $25,000 for each violation. When the violation is a continuing one, each day of the violation constitutes a separate offense. 49 U.S.C. 5123.

[61 FR 38646, July 25, 1996]

§ 209.105 Notice of probable violation.

(a) FRA, through the Chief Counsel, begins a civil penalty proceeding by serving a notice of probable violation on a person charging him or her with having violated one or more provisions of subchapter A or C of chapter I, subtitle B of this title. Appendix B to this part contains guidelines used by the chief counsel in making initial penalty assessments.

(b) A notice of probable violation issued under this section includes:

(1) A statement of the provision(s) which the respondent is believed to have violated;

(2) A statement of the factual allegations upon which the proposed civil penalty is being sought;

(3) Notice of the maximum amount of civil penalty for which the respondent may be liable;

(4) Notice of the amount of the civil penalty proposed to be assessed;

(5) A description of the manner in which the respondent should make payment of any money to the United States;

(6) A statement of the respondent's right to present written explanations, information or any materials in answer to the charges or in mitigation of the penalty; and

(7) A statement of the respondent's right to request a hearing and the procedures for requesting a hearing.

(c) The FRA may amend the notice of probable violation at any time prior to the entry of an order assessing a civil penalty. If the amendment contains any new material allegation of fact, the respondent is given an opportunity to respond. In an amended notice, FRA may change the penalty amount proposed to be assessed up to and including the maximum penalty amount of $25,000 for each violation.

[42 FR 56742, Oct. 28, 1977, as amended at 61 FR 38646, July 25, 1996]

§ 209.107 Reply.

(a) Within thirty (30) days of the service of a notice of probable violation issued under § 209.105, the respondent may—

(1) Pay as provided in § 209.109(a) and thereby close the case;

(2) Make an informal response as provided in § 209.111; or

(3) Request a hearing as provided in § 209.113.

(b) The Chief Counsel may extend the thirty (30) days period for good cause shown.

(c) Failure of the respondent to reply by taking one of the three actions described in paragraph (a) of this section within the period provided constitutes a waiver of his or her right to appear and contest the allegations and authorizes the Chief Counsel, without further notice to the respondent, to find the facts to be as alleged in the notice of probable violation and to assess an appropriate civil penalty.

§ 209.109 Payment of penalty; compromise.

(a) Payment of a civil penalty should be made by certified check or money order payable to the Federal Railroad Administration and sent to the Accounting Division, Federal Railroad Administration, Department of Transportation, Washington, DC 20590.

(b) At any time before an order assessing a penalty is referred to the Attorney General for collection, the respondent may offer to compromise for a specific amount by contracting the Chief Counsel.

§ 209.111 Informal response and assessment.

(a) If a respondent elects to make an informal response to a notice of probable violation, respondent shall submit to the Chief Counsel such written explanations, information or other materials as respondent may desire in answer to the charges or in mitigation of the proposed penalty.

(b) The respondent may include in his or her informal written response a request for a conference. Upon receipt of such a request, the Chief Counsel arranges for a conference as soon as practicable at a time and place of mutual convenience.

(c) Written explanations, information or materials, submitted by the respondent and relevant information presented during any conference held under this section are considered by the Chief Counsel in reviewing the notice of proposed violation and determining the fact of violation and the amount of any penalty to be assessed.

(d) After consideration of an informal response, including any relevant information presented at a conference, the Chief Counsel may dismiss the notice of probable violation in whole or in part. If he or she does not dismiss it in whole, he or she may issue an order assessing a civil penalty.

§ 209.113 Request for hearing.

(a) If a respondent elects to request a hearing, he or she must submit a written request to the Chief Counsel referring to the case number which appeared on the notice of the probable violation. The request must—

(1) State the name and address of the respondent and of the person signing the request if different from the respondent;

(2) State with respect to each allegation whether it is admitted or denied; and

(3) State with particularity the issues to be raised by the respondent at the hearing.

(b) After a request for hearing which complies with the requirements of paragraph (a) of this section, the Chief Counsel schedules a hearing for the earliest practicable date.

(c) The Chief Counsel or the hearing officer appointed under § 209.115 may grant extensions of the time of the commencement of the hearing for good cause shown.

§ 209.115 Hearing.

(a) When a hearing is requested and scheduled under § 209.113, a hearing officer designated by the Chief Counsel convenes and presides over the hearing. If requested by respondent and if practicable, the hearing is held in the general vicinity of the place where the alleged violation occurred, or at a place convenient to the respondent. Testimony by witnesses shall be given under oath and the hearing shall be recorded verbatim.

(b) The presiding official may:

(1) Administer oaths and affirmations;

(2) Issue subpoenas as provided by § 209.7;

(3) Adopt procedures for the submission of evidence in written form;

(4) Take or cause depositions to be taken;

(5) Rule on offers of proof and receive relevant evidence;

(6) Examine witnesses at the hearing;

(7) Convene, recess, reconvene, and adjourn and otherwise regulate the course of the hearing;

(8) Hold conferences for settlement, simplification of the issues or any other proper purpose; and

(9) Take any other action authorized by or consistent with the provisions of this subpart pertaining to civil penalties and permitted by law which may expedite the hearing or aid in the disposition of an issue raised, therein.

(c) The Chief Counsel has the burden of providing the facts alleged in the notice of proposed violation and may offer such relevant information as may be necessary fully to inform the presiding officer as to the matter concerned.

(d) The respondent may appear and be heard on his or her own behalf or through counsel of his or her choice. The respondent or his or her counsel may offer relevant information including testimony which he or she believes should be considered in defense of the allegations or which may bear on the penalty proposed to be assessed and conduct such cross-examination as may be required for a full disclosure of the material facts.

(e) At the conclusion of the hearing or as soon thereafter as the hearing officer shall provide, the parties may file proposed findings and conclusions, together with supporting reasons.

[42 FR 56742, Oct. 28, 1977; 42 FR 59755, Nov. 21, 1977]

§ 209.117 Presiding officer's decision.

(a) After consideration of the evidence of record, the presiding officer may dismiss the notice of probable violation in whole or in part. If the presiding officer does not dismiss it in whole, he or she will issue and serve on the respondent an order assessing a civil penalty. The decision of the presiding officer will include a statement of findings and conclusions as well as the reasons therefor on all material issues of fact, law, and discretion.

(b) If, within twenty (20) days after service of an order assessing a civil penalty, the respondent does not pay the civil penalty or file an appeal as provided in § 209.121, the case may be referred to the Attorney General with a request that an action to collect the penalty be brought in the appropriate United States District Court.

§ 209.119 Assessment considerations.

The assessment of a civil penalty under § 209.117 is made only after considering:

(a) The nature and circumstances of the violation;

(b) The extent and gravity of the violation;

(c) The degree of the respondent's culpabilty;

(d) The respondent's history of prior offenses;

(e) The respondent's ability to pay;

(f) The effect on the respondent's ability to continue in business; and

(g) Such other matters as justice may require.

§ 209.121 Appeal.

(a) Any party aggrieved by a presiding officer's decision or order issued under § 209.117 assessing a civil penalty may file an appeal with the Administrator. The appeal must be filed within twenty (20) days of service of the presiding officer's order.

(b) Prior to rendering a final determination on an appeal, the Administrator may remand the case for further proceedings before the hearing officer.

(c) In the case of an appeal by a respondent, if the Administrator affirms the assessment and the respondent does not pay the civil penalty within twenty (20) days after service of the Administrator's decision on appeal, the matter may be referred to the Attorney General with a request that an action to collect the penalty be brought in the appropriate United States District Court.

CRIMINAL PENALTIES

§ 209.131 Criminal penalties generally.

The Federal hazardous materials transportation safety laws (49 U.S.C. 5124) provide a criminal penalty of a fine under title 18, United States Code, and imprisonment for not more than 5 years, or both, for any person who knowingly violates 49 U.S.C. 5104(b) or who willfully violates chapter 51 of title 49, United States Code, or a regulation prescribed or order issued under that chapter.

[61 FR 38647, July 25, 1996]

§ 209.133 Referral for prosecution.

If an inspector, including a certified state inspector under Part 212 of this chapter, or other employee of FRA becomes aware of a possible willful violation of the Federal hazardous materials transportation safety laws (49 U.S.C. Chapter 51) or a regulation issued under those laws for which FRA exercises enforcement responsibility, he or she reports it to the Chief Counsel. If evidence exists tending to establish a prima facie case, and if it appears that assessment of a civil penalty would not be an adequate deterrent to future violations, the Chief Counsel refers the report to the Department of Justice for criminal prosecution of the offender.

[61 FR 38647, July 25, 1996]

Subpart C—Compliance Orders

§ 209.201 Compliance orders generally.

(a) This subpart prescribes rules of procedure leading to the issuance of compliance orders pursuant to the Federal railroad safety laws at 49 U.S.C. 5121(a) and/or 20111(b).

(b) The FRA may commence a proceeding under this subpart when FRA has reason to believe that a person is engaging in conduct or a pattern of conduct that involves one or more violations of the Federal railroad safety laws or any regulation or order issued under those laws for which FRA exercises enforcement authority.

[61 FR 38647, July 25, 1996]

§ 209.203 Notice of investigation.

(a) FRA begins a compliance order proceeding by serving a notice of investigation on the respondent.

(b) The notice of investigation contains:

(1) A statement of the legal authority for the proceeding;

(2) A statement of the factual allegations upon which the remedial action is being sought; and

(3) A statement of the remedial action being sought in the form of a proposed compliance order.

(c) The FRA may amend the notice of investigation at any time prior to the entry of a final compliance order. If an amendment includes any new material allegation of fact or seeks new or additional remedial action, the respondent is given an opportunity to respond.

§ 209.205 Reply.

(a) Within thirty (30) days of service of a notice of investigation, the respondent may file a reply with the FRA. The Chief Counsel may extend the time for filing for good cause shown.

(b) The reply must be in writing, signed by the person filing it, and state with respect to each factual allegation whether it is admitted or denied. Even though formally denied, a factual allegation set forth in a notice of investigation is considered to be admitted for purposes of the proceeding unless:

(1) Opposed by the affidavit of an individual having personal knowledge of the subject matter;

(2) Challenged as defective on its face together with a supporting explanation as to why it is believed to be defective; or

(3) Otherwise actively put at issue through the submission of relevant evidence.

(c) The reply must set forth any affirmative defenses and include a statement of the form and nature of proof by which those defenses are to be established.

(d) If it is necessary to respond to an amendment to the notice of investigation, the respondent may amend the reply concerning the substance of matters contained in the amendment to the notice at any time before the issuance of an order under § 209.211.

(e) If the respondent elects not to contest one or more factual allegations, he or she should so state in the reply. An election not to contest a factual allegation is an admission of that allegation solely for the purpose of issuing a compliance order. That election constitutes a waiver of hearing as to that allegation but does not, by itself, constitute a waiver of the right to be heard on other issues. In connection with a statement of election not to contest a factual allegation, the respondent may propose an appropriate order for issuance by the Administrator or propose the negotiation of a consent order.

(f) Failure of the respondent to file a reply within the period provided constitutes a waiver of his or her right to appear and contest the allegation and authorizes the Administrator, without further notice to the respondent, to find the facts to be as alleged in the notice of proposed violation and to issue an appropriate order directing compliance.

§ 209.207 Consent order.

(a) At any time before the issuance of an order under § 209.211, the Chief Counsel and the respondent may execute an agreement proposing the entry by consent of an order directing compliance. The Administrator may accept the proposed order by signing it. If the Administrator rejects the proposed order, he or she directs that the proceeding continue.

(b) An agreement submitted to the Administrator under this section must include:

(1) A proposed compliance order suitable for the Administrator's signature;

(2) An admission of all jurisdictional facts;

(3) An express waiver of further procedural steps and of all right to seek judicial review or otherwise challenge or contest the validity of the order; and

(4) An acknowledgment that the notice of investigation may be used to construe the terms of the order.

§ 209.209 Hearing.

(a) When a respondent files a reply contesting allegations in a notice of investigation issued under § 209.203 or when the FRA and the respondent fail to agree upon an acceptable consent order, the hearing officer designated by the Chief Counsel convenes and presides over a hearing on the proposed compliance order.

(b) The presiding official may:

(1) Administer oaths and affirmations;

(2) Issue subpoenas as provided by § 209.7;

(3) Adopt procedures for the submission of evidence;

(4) Take or cause depositions to be taken;

(5) Rule on offers of proof and receive relevant evidence;

(6) Examine witnesses at the hearing;

(7) Convene, recess, reconvene, adjourn and otherwise regulate the course of the hearing;

(8) Hold conferences for settlement, simplification of the issues or any other proper purpose; and

(9) Take any other action authorized by or consistent with the provisions of this subpart pertaining to compliance orders and permitted by law which may

expedite the hearing or aid in the disposition of an issue raised therein.

(c) The Chief Counsel has the burden of providing the facts alleged in the notice of investigation and may offer such relevant information as may be necessary fully to inform the presiding officer as to the matter concerned.

(d) The respondent may appear and be heard on his or her own behalf or through counsel of his or her choice. The respondent or his or her counsel may offer relevant information, including testimony which he or she believes should be considered in defense of the allegations or which may bear on the remedial action being sought, and conduct such cross-examination as may be required for a full disclosure of the material facts.

(e) At the conclusion of the hearing or as soon thereafter as the hearing officer shall provide, the parties may file proposed findings and conclusions, together with supporting reasons therefor.

§ 209.211 Presiding officer's decision.

(a) After consideration of evidence, the presiding officer may dismiss the notice of investigation or issue a compliance order. The decision of the presiding officer will include a statement of findings and conclusions as well as the reasons therefor on all material issues of fact, law, and discretion.

(b) A compliance order issued under this section is effective twenty (20) days from service on the respondent unless otherwise provided therein.

§ 209.213 Appeal.

(a) Any party aggrieved by a presiding officer's decision may file an appeal with the Administrator. The appeal must be filed within twenty (20) days after service of the presiding officer's decision.

(b) Prior to rendering a final determination on an appeal, the Administrator may remand the case for further proceedings before the hearing officer.

(c) The filing of an appeal does not stay the effectiveness of a compliance order unless the Administrator expressly so provides.

§ 209.215 Time limitation.

A proceeding for the issuance of a compliance order under the Federal Railroad Safety Act of 1970, as amended, shall be completed within twelve (12) months after issuance of the notice of investigation.

Subpart D—Disqualification Procedures

SOURCE: 54 FR 42907, Oct. 18, 1989, unless otherwise noted.

§ 209.301 Purpose and scope.

(a) This subpart prescribes the rules of practice for administrative proceedings relating to the determination of an individual's fitness for performing safety-sensitive functions under section 209(f) of the Federal Railroad Safety Act of 1970 (45 U.S.C. 438(f)).

(b) The purpose of this subpart is to prevent accidents and casualties in railroad operations that result from the presence in the work force of railroad employees, including managers and supervisors, and agents of railroads who have demonstrated their unfitness to perform the safety-sensitive functions described in § 209.303 by violating any rule, regulation, order or standard prescribed by FRA. Employees and agents who evidence such unfitness may be disqualified, under specified terms and conditions, temporarily or permanently, from performing such safety-sensitive functions.

(c) This subpart does not preempt a railroad from initiating disciplinary proceedings and imposing disciplinary sanctions against its employees, including managers and supervisors, under its collective bargaining agreements or in the normal and customary manner. Disqualification determinations made under this subpart shall have no effect on prior or subsequent disciplinary actions taken against such employees by railroads.

§ 209.303 Coverage.

This subpart applies to the following individuals:

(a) Railroad employees who are assigned to perform service subject to the Hours of Service Act (45 U.S.C. 61–64b) during a duty tour, whether or not the

person has performed or is currently performing such service, and any person who performs such service.

(b) Railroad employees or agents who:

(1) Inspect, install, repair, or maintain track and roadbed;

(2) Inspect, repair or maintain, locomotives, passenger cars, and freight cars;

(3) Conduct training and testing of employees when the training or testing is required by the FRA's safety regulations; or

(c) Railroad managers, supervisors, or agents when they:

(1) Perform the safety-sensitive functions listed in paragraphs (a) and (b) of this section;

(2) Supervise and otherwise direct the performance of the safety-sensitive functions listed in paragraphs (a) and (b) of this section; or

(3) Are in a position to direct the commission of violations of any of the requirements of parts 213 through 236 of this title.

§ 209.305 Notice of proposed disqualification.

(a) FRA, through the Chief Counsel, begins a disqualification proceeding by serving a notice of proposed disqualification on the respondent charging him or her with having violated one or more rules, regulations, orders, or standards promulgated by FRA, which render the respondent unfit to perform safety-sensitive functions described in § 209.303.

(b) The notice of proposed disqualification issued under this section shall contain:

(1) A statement of the rule(s), regulation(s), order(s), or standard(s) that the respondent is alleged to have violated;

(2) A statement of the factual allegations that form the basis of the initial determination that the respondent is not fit to perform safety-sensitive functions;

(3) A statement of the effective date, duration, and other conditions, if any, of the disqualification order;

(4) A statement of the respondent's right to answer the charges in writing and furnish affidavits and any other documentary evidence in support of the answer;

(5) A statement of the respondent's right to make an informal response to the Chief Counsel;

(6) A statement of the respondent's right to request a hearing and the procedures for requesting a hearing;

(7) A statement of the respondent's right to counsel or other designated representative; and

(8) Notice of the consequences of the respondent's failure to take any of the actions described in § 209.307(a).

(c) The Chief Counsel shall enclose with the notice of proposed disqualification a copy of the material that is relied on in support of the charges. Nothing in this section precludes the Chief Counsel from presenting at a subsequent hearing under § 209.321 any evidence of the charges set forth in the notice that the Chief Counsel acquires after service thereof on the respondent. The Chief Counsel, however, shall serve a copy of any such evidence on the respondent at or before the prehearing conference required under § 209.319. Failure to furnish such evidence to respondent at or before the prehearing conference bars its introduction at the hearing.

(d) The Chief Counsel shall provide a copy of the notice of proposed disqualification to the railroad that employs the respondent.

§ 209.307 Reply.

(a) Within 30 days after receipt of the notice of proposed disqualification issued under § 209.305, the respondent shall reply in writing to the charges. The respondent may furnish affidavits and any other documentary evidence in support of the reply. Further, the respondent may elect to—

(1) Stipulate to the charges and consent to the imposition of the disqualification order under the conditions set forth in the notice;

(2) Make an informal response as provided in § 209.309; or

(3) Request a hearing as provided in § 209.311.

(b) The Chief Counsel may extend the reply period for good cause shown, provided the request for extension is served before the expiration of the period provided in paragraph (a) of this section.

(c) Failure of the respondent to reply to the notice of proposed disqualification within the period provided in paragraph (a) of this section or an extension thereto provided under paragraph (b) of this section constitutes a waiver of the respondent's right to appear and contest the charges or the proposed disqualification. Respondent's failure to reply authorizes the Chief Counsel, without further notice to the respondent, to find the respondent unfit for the performance of the safety-sensitive functions described in § 209.303 and to order the respondent disqualified from performing them for the period and under the other conditions described in the notice of proposed disqualification. The Chief Counsel shall serve respondent with the disqualification order and provide a copy of the order to the railroad by which the respondent is employed.

§ 209.309 Informal response.

(a) If the respondent elects to make an informal response to a notice of proposed disqualification, he or she shall submit to the Chief Counsel such written explanations, information, or other materials as respondent may desire in answer to the charges or in mitigation of the proposed disqualification.

(b) The respondent may include in an informal written response a request for a conference. Upon receipt of such a request, the Chief Counsel shall arrange for a conference at a time and place designated by the Chief Counsel.

(c) Written explanations, information, or materials submitted by the respondent and relevant information presented during any conference held under this section shall be considered by the Chief Counsel in reviewing the notice of proposed disqualification, including the question of the respondent's fitness and the conditions of any disqualification that may be imposed.

(d) After consideration of an informal response, including any relevant information presented at a conference, the Chief Counsel shall take one of the following actions:

(1) Dismiss all the charges and terminate the notice of proposed disqualification;

(2) Dismiss some of the charges and mitigate the proposed disqualification;

(3) Mitigate the proposed disqualification; or

(4) Sustain the charges and proposed disqualification.

(e) Should the Chief Counsel sustain, in whole or in part, the charges and proposed disqualification and reach settlement with the respondent, the Chief Counsel shall issue an appropriate disqualification order reflecting the settlement and shall provide a copy of that order to the railroad by which the respondent is employed. The duration of the disqualification period may be less than, but shall be no greater than, the period set forth in the notice. Any settlement reached shall be evidenced by a written agreement, which shall include declarations from the respondent stipulating to the charges contained in the disqualification order, consenting to the imposition of the disqualification under the conditions set forth in the disqualification order, and waiving his or her right to a hearing.

(f) If settlement of the charges against the respondent is not achieved, the Chief Counsel shall terminate settlement discussions no later than 30 days from service of the informal response upon the Chief Counsel by serving respondent written notice of termination of settlement negotiations.

(g) By electing to make an informal response to a notice of proposed disqualification, the respondent does not waive the right to a hearing. However, the respondent must submit the hearing request required by § 209.311(a) within l0 days after receipt of the notice of termination of settlement negotiations from the Chief Counsel. Failure to submit such a request constitutes a waiver of the respondent's right to appear and contest the charges or the proposed disqualification.

(h) The Chief Counsel may extend the period for requesting a hearing for good cause shown, provided the request for extension is served before the expiration of the period provided in paragraph (g) of this section.

§ 209.311 Request for hearing.

(a) If the respondent elects to request a hearing, he or she must submit a written request within the time periods specified in § 209.307(a) or § 209.309(g) to the Chief Counsel referring to the case

number that appears on the notice of proposed disqualification. The request must contain the following:

(1) The name, address, and telephone number of the respondent and of the respondent's designated representative, if any;

(2) A specific response admitting, denying, or explaining each allegation of the notice of disqualification order.

(3) A description of the claims and defenses to be raised by the respondent at the hearing; and

(4) The signature of the respondent or the representative, if any.

(b) Upon receipt of a request for a hearing complying with the requirements of paragraph (a) of this section, the Chief Counsel shall arrange for the appointment of a presiding officer and transmit the disqualification file to the presiding officer, who shall schedule the hearing for the earliest practicable date within the time period set by § 209.321(a) of this subpart.

(c) Upon assignment of a presiding officer, further matters in the proceeding generally are conducted by and through the presiding officer, except that the Chief Counsel and respondent may settle or voluntarily dismiss the case without order of the presiding officer. The Chief Counsel shall promptly notify the presiding officer of any settlement or dismissal of the case.

§ 209.313 Discovery.

(a) Disqualification proceedings shall be conducted as expeditiously as possible with due regard to the rights of the parties. Discovery is designed to enable a party to obtain relevant information needed for preparation of the party's case. These regulations are intended to provide a simple, timely, and relatively economical system for discovery. They shall be interpreted and applied so as to avoid delay and facilitate adjudication of the case.

(b) Discovery may be obtained by requests for admission under § 209.6, requests for production of documentary or other tangible evidence under § 209.7, and depositions under § 209.8.

(c) A party may initiate the methods of discovery permitted under paragraph (b) of this section at any time after respondent requests a hearing under § 209.311.

(d) Discovery shall be completed within 90 days after receipt of respondent's request for a hearing under § 209.311. Upon motion for good cause shown, the presiding officer may extend this time period for an additional 30 days. The presiding officer may grant an additional 30 day extension only when the party requesting the extension shows by clear and convincing evidence that the party was unable to complete discovery within the prescribed time period through no fault or lack of due diligence of such party, and that denial of the request would result in irreparable prejudice.

(e) If a party fails to comply with a discovery order or an order to compel, the presiding officer may:

(1) Strike any appropriate part of the pleadings or other submissions of the party failing to comply with such order;

(2) Prohibit the party failing to comply with such order from introducing evidence relating to the information sought;

(3) Draw an inference in favor of the requesting party with regard to the information sought; and

(4) Permit the requesting party to introduce secondary evidence concerning the information sought.

§ 209.315 Subpoenas.

Once a notice of proposed disqualification has been issued in a particular matter, only the presiding officer may issue, deny, quash, or modify subpoenas under this subpart in accordance with § 209.7.

§ 209.317 Official record.

The notice of proposed disqualification, respondent's reply, exhibits, and verbatim record of testimony, if a hearing is held, and all pleadings, stipulations, and admissions filed and rulings and orders entered in the course of the proceeding shall constitute the exclusive and official record.

§ 209.319 Prehearing conference.

(a) The parties shall confer with the presiding officer, either in person or by telephone, for a conference at least 10 days before the hearing to consider:

(1) Formulation and simplification of the issues;

(2) Stipulations, admissions of fact, and admissions of the contents and authenticity of documents;

(3) Advance rulings from the presiding officer on the admissibility of evidence;

(4) Identification of witnesses, including the scope of their testimony, and of hearing exhibits;

(5) Possibility of settlement; and

(6) Such other matters as the presiding officer deems necessary to expedite the disposition of the proceeding.

(b) The record shall show the matters disposed of by order and by agreement in such a prehearing conference. The subsequent course of the hearing shall be controlled by such action.

(c) The prehearing conference shall be held within 150 days after receipt of respondent's request for a hearing under § 209.311.

§ 209.321 Hearing.

(a) Upon receipt of a hearing request complying with § 209.311, an administrative hearing for review of a notice of proposed disqualification shall be conducted by a presiding officer, who can be any person authorized by the FRA Administrator, including an administrative law judge. The hearing shall begin within 180 days from receipt of respondent's hearing request. Notice of the time and place of the hearing shall be given to the parties at least 20 days before the hearing. Testimony by witnesses shall be given under oath and the hearing shall be recorded verbatim. The hearing shall be open to the public, unless the presiding official determines that it would be in the best interests of the respondent, a witness, or other affected persons, to close all or any part of it. If the presiding official makes such a determination, an appropriate order, which sets forth the reasons therefor, shall be entered.

(b) The presiding officer may:

(1) Administer oaths and affirmations;

(2) Issue subpoenas as provided by § 209.7;

(3) Adopt procedures for the submission of evidence in written form;

(4) Take or cause depositions to be taken as provided in § 209.8;

(5) Rule on offers of proof and receive relevant evidence;

(6) Examine witnesses at the hearing;

(7) Convene, recess, reconvene, adjourn, and otherwise regulate the course of the hearing;

(8) Hold conferences for settlement, simplification of the issues, or any other proper purpose; and

(9) Take any other action authorized by or consistent with the provisions of this subpart and permitted by law that may expedite the hearing or aid in the disposition of an issue raised therein.

(c) FRA has the burden of proof, by a preponderance of the evidence, as to the facts alleged in the notice of proposed disqualification, the reasonableness of the conditions of the qualification proposed, and, except as provided in § 209.329(a), the respondent's lack of fitness to perform safety-sensitive functions. The Chief Counsel may offer relevant evidence, including testimony, in support of the allegations contained in the notice of proposed disqualification and conduct such cross-examination as may be required for a full disclosure of the material facts.

(d) The respondent may appear and be heard on respondent's own behalf or through respondent's designated representative. The respondent may offer relevant evidence, including testimony, in defense of the allegations or in mitigation of the proposed disqualification and conduct such cross-examination as may be required for a full disclosure of the material facts. Respondent has the burden of proof, by a preponderance of the evidence, as to any affirmative defense, including that respondent's actions were in obedience to the direct order of a railroad supervisor or higher level official.

(e) The record shall be closed at the conclusion of the hearing, unless the parties request the opportunity to submit proposed findings and conclusions. When the presiding officer allows the parties to submit proposed findings and conclusions, documents previously identified for introduction into evidence, briefs, or other posthearing submissions the record shall be left open for such time as the presiding officer grants for that purpose.

[54 FR 42907, Oct. 18, 1989, as amended at 60 FR 53136, Oct. 12, 1995]

§ 209.323 Initial decision.

(a) The presiding officer shall prepare an initial decision after the closing of the record. The initial decision may dismiss the notice of proposed disqualification, in whole or in part, sustain the charges and proposed disqualification, or sustain the charges and mitigate the proposed disqualification.

(b) If the presiding officer sustains the charges and the proposed disqualification, dismisses some of the charges, or mitigates the proposed disqualification, the presiding officer shall issue and serve an appropriate order disqualifying respondent from engaging in the safety-sensitive functions described in § 209.303. If the presiding officer dismisses all of the charges set forth in notice of proposed disqualification, a dismissal order shall be issued and served.

(c) Each initial decision shall contain:

(1) Findings of fact and conclusions of law, as well as the reasons or bases therefor, upon all the material issues of fact and law presented on the record;

(2) An order, as described in paragraph (b) of this section;

(3) The dates any disqualification is to begin and end and other conditions, if any, that the respondent must satisfy before the disqualification order is discharged;

(4) The date upon which the decision will become final, as prescribed in § 209.325; and

(5) Notice of the parties' appeal rights, as prescribed in § 209.327.

(d) The decision shall be served upon the FRA Chief Counsel and the respondent. The Chief Counsel shall provide a copy of the disqualification order to the railroad by which the respondent is employed.

§ 209.325 Finality of decision.

(a) The initial decision of the presiding officer shall become final 35 days after issuance. Such decisions are not precedent.

(b) *Exception*. The initial decision shall not become final if, within 35 days after issuance of the decision, any party files an appeal under § 209.327. The timely filing of such an appeal shall stay the order in the initial decision.

§ 209.327 Appeal.

(a) Any party aggrieved by an initial decision issued under § 209.323 may file an appeal. The appeal must be filed within 35 days of issuance of the initial decision with the Federal Railroad Administrator, 400 Seventh Street, SW., Washington, DC 20590. A copy of the appeal shall be served on each party. The appeal shall set forth objections to the initial decision, supported by reference to applicable laws and regulations, and with specific reference to the record. If the Administrator has played any role in investigating, prosecuting, or deciding to prosecute the particular case, the Administrator shall recuse him or herself and delegate his or her authority under this section to a person not so involved.

(b) A party may file a reply to an appeal within 25 days of service of the appeal. If the party relies on evidence contained in the record for the reply, the party shall specifically refer to the pertinent evidence in the record.

(c) The Administrator may extend the period for filing an appeal or a response for good cause shown, provided the written request for extension is served before the expiration of the applicable period provided in paragraph (c) or (d) of this section.

(d) The Administrator has sole discretion to permit oral argument on the appeal. On the Administrator's own initiative or upon written motion by any party, the Administrator may determine that oral argument will contribute substantially to the development of the issues on appeal and may grant the parties an opportunity for oral argument.

(e) The Administrator may affirm, reverse, alter, or modify the decision of the presiding officer, or may remand the case for further proceedings before the presiding officer. The Administrator shall inform the parties and the presiding officer of his or her decision.

(f) The decision of the Administrator is final, constitutes final agency action, and is not subject to further administrative review.

§ 209.329 Assessment considerations.

(a) Proof of a respondent's willful violation of one of the requirements of parts 213 through 236 (excluding parts

225, 228, and 233) of this title establishes a rebuttable presumption that the respondent is unfit to perform the safety-sensitive functions described in § 209.303. Where such presumption arises, the respondent has the burden of establishing that, taking account of the factors in paragraph (b) of this section, he or she is fit to perform the foregoing safety-sensitive functions for the period and under the other conditions, if any, proposed in the notice of proposed disqualification.

(b) In determining respondent's lack of fitness to perform safety-sensitive functions and the duration and other conditions, if any, of appropriate disqualification orders under §§ 209.309, 209.323, and 209.327, the factors to be considered, to the extent: Each is pertinent to the respondent's case, include but are not limited to the following:

(1) The nature and circumstances of the violation, including whether the violation was intentional, technical, or inadvertent, was committed willfully, or was frequently repeated;

(2) The adverse impact or the potentially adverse impact of the violation on the health and safety of persons and the safety of property;

(3) The railroad's operating rules, safety rules, and repair and maintenance standards;

(4) Repair and maintenance standards adopted by the industry;

(5) The consistency of the conditions of the proposed disqualification with disqualification orders issued against other employees for the same or similar violations;

(6) Whether the respondent was on notice of any safety regulations that were violated or whether the respondent had been warned about the conduct in question;

(7) The respondent's past record of committing violations of safety regulations, including previous FRA warnings issued, disqualifications imposed, civil penalties assessed, railroad disciplinary actions, and criminal convictions therefor;

(8) The civil penalty scheduled for the violation of the safety regulation in question;

(9) Mitigating circumstances surrounding the violation, such as the existence of an emergency situation endangering persons or property and the need for the respondent to take immediate action; and

(10) Such other factors as may be warranted in the public interest.

§ 209.331 Enforcement of disqualification order.

(a) A railroad that employs or formerly employed an individual serving under a disqualification order shall inform prospective or actual employers of the terms and conditions of the order upon receiving notice that the disqualified employee is being considered for employment with or is employed by another railroad to perform any of the safety-sensitive functions described in § 209.303.

(b) A railroad that is considering hiring an individual to perform the safety-sensitive functions described in § 209.303 shall ascertain from the individual's previous employer, if such employer was a railroad, whether the individual is subject to a disqualification order.

(c) An individual subject to a disqualification order shall inform his or her employer of the order and provide a copy thereof within 5 days after receipt of the order. Such an individual shall likewise inform any prospective employer who is considering hiring the individual to perform any of the safety-sensitive functions described in § 209.303 of the order and provide a copy thereof within 5 days after receipt of the order or upon application for the position, whichever first occurs.

§ 209.333 Prohibitions.

(a) An individual subject to a disqualification order shall not work for any railroad in any manner inconsistent with the order.

(b) A railroad shall not employ any individual subject to a disqualification order in any manner inconsistent with the order.

§ 209.335 Penalties.

(a) Any individual who violates § 209.331(c) or § 209.333(a) may be permanently disqualified from performing the safety-sensitive functions described in § 209.303. Any individual who willfully violates § 209.331(c) or § 209.333(a) may also be assessed a civil penalty of

at least $1,000 and not more than $5,000 per violation.

(b) Any railroad that violates § 209.331 (a) or (b) or § 209.333(b) may be assessed a civil penalty of at least $5,000 and not more than $10,000 per violation.

(c) Each day a violation continues shall constitute a separate offense.

§ 209.337 Information collection.

The information collection requirements in § 209.331 of this part have been reviewed by the Office of Management and Budget pursuant to the Paperwork Reduction Act of 1980, (44 U.S.C. 3501 *et seq.*) and have been assigned OMB control number 2130–0529.

[56 FR 66791, Dec. 26, 1991]

Subpart E—Reporting of Remedial Actions

SOURCE: 59 FR 43676, Aug. 24, 1994, unless otherwise noted.

§ 209.401 Purpose and scope.

(a) The purpose of this subpart is to prevent accidents and casualties arising from the operation of a railroad that result from a railroad's failure to remedy certain violations of the Federal railroad safety laws for which assessment of a civil penalty has been recommended.

(b) To achieve this purpose, this subpart requires that if an FRA Safety Inspector notifies a railroad both that assessment of a civil penalty will be recommended for its failure to comply with a provision of the Federal railroad safety laws and that a remedial actions report must be submitted, the railroad shall report to the FRA Safety Inspector, within 30 days after the end of the calendar month in which such notification is received, actions taken to remedy that failure.

(c) This subpart does not relieve the railroad of the underlying responsibility to comply with a provision of the Federal railroad safety laws. The 30-day period after the end of the calendar month in which notification is received is intended merely to provide the railroad with an opportunity to prepare its report to FRA, and does not excuse continued noncompliance.

(d) This subpart requires the submission of remedial actions reports for the general categories of physical defects, recordkeeping and reporting violations, and filing violations, where the railroad can literally and specifically correct a failure to comply with a provision of the Federal railroad safety laws, as reasonably determined by the FRA Safety Inspector. No railroad is required to submit a report for a failure involving either a completed or past transaction or a transaction that it can no longer remedy.

§ 209.403 Applicability.

This subpart applies to any railroad that receives written notification from an FRA Safety Inspector both (i) that assessment of a civil penalty will be recommended for its failure to comply with a provision of the Federal railroad safety laws and (ii) that it must submit a remedial actions report.

§ 209.405 Reporting of remedial actions.

(a) Except as provided in § 209.407, each railroad that has received written notification on Form FRA F 6180.96 from an FRA Safety Inspector both that assessment of a civil penalty will be recommended for the railroad's failure to comply with a provision of the Federal railroad safety laws and that it must submit a remedial actions report, shall report on this form all actions that it takes to remedy that failure. The railroad shall submit the completed form to the FRA Safety Inspector within 30 days after the end of the calendar month in which the notification is received.

(1) *Date of receipt of notification.* If the FRA Safety Inspector provides written notification to the railroad by first class mail, then for purposes of determining the calendar month in which notification is received, the railroad shall be presumed to have received the notification five business days following the date of mailing.

(2) *Completion of Form FRA F 6180.96, including selection of railroad remedial action code.* Each railroad shall complete the remedial actions report in the manner prescribed on the report form. The railroad shall select the one remedial action code on the reporting form

that most accurately reflects the action or actions that it took to remedy the failure, such as, repair or replacement of a defective component without movement, movement of a locomotive or car for repair (where permitted) and its subsequent repair, completion of a required test or inspection, removal of a noncomplying item from service but not for repair (where permitted), reduction of operating speed (where sufficient to achieve compliance), or any combination of actions appropriate to remedy the noncompliance cited. Any railroad selecting the remedial action code ''other remedial actions'' shall also furnish FRA with a brief narrative description of the action or actions taken.

(3) *Submission of Form FRA F 6180.96.* The railroad shall return the form by first class mail to the FRA Safety Inspector whose name and address appear on the form.

(b) Any railroad concluding that the violation alleged on the inspection report may not have occurred may submit the remedial actions report with an appropriate written explanation. Failure to raise all pertinent defenses does not foreclose the railroad from doing so in response to a penalty demand.

§ 209.407 Delayed reports.

(a) If a railroad cannot initiate or complete remedial actions within 30 days after the end of the calendar month in which the notification is received, it shall—

(1) Prepare, in writing, an explanation of the reasons for such delay and a good faith estimate of the date by which it will complete the remedial actions, stating the name and job title of the preparer and including either:

(i) A photocopy of both sides of the Form FRA F 6180.96 on which the railroad received notification; or

(ii) The following information:

(A) The inspection report number;

(B) The inspection date; and

(C) The item number; and

(2) Sign, date, and submit such written explanation and estimate, by first class mail, to the FRA Safety Inspector whose name and address appear on the notification, within 30 days after the end of the calendar month in which the notification is received.

(b) Within 30 days after the end of the calendar month in which all such remedial actions are completed, the railroad shall report in accordance with the remedial action code procedures referenced in § 209.405(a). The additional time provided by this section for a railroad to submit a delayed report shall not excuse it from liability for any continuing violation of a provision of the Federal railroad safety laws.

§ 209.409 Penalties.

Any person who violates any requirement of this subpart or causes the violation of any such requirement is subject to a civil penalty of at least $500 and not more than $10,000 per violation, except that: Penalties may be assessed against individuals only for willful violations, and, where a grossly negligent violation or a pattern of repeated violations has created an imminent hazard of death or injury to persons, or has caused death or injury, a penalty not to exceed $20,000 per violation may be assessed. Each day a violation continues shall constitute a separate offense. A person may also be subject to the criminal penalties provided for in 49 U.S.C. 21311 (formerly codified in 45 U.S.C. 438(e)) for knowingly and willfully falsifying reports required by this subpart.

APPENDIX A TO PART 209—INTERIM STATEMENT OF AGENCY POLICY CONCERNING ENFORCEMENT OF THE FEDERAL RAILROAD SAFETY LAWS

The Federal Railroad Administration (''fra'') enforces the federal railroad safety statutes under delegation from the Secretary of Transportation. See 49 CFR 1.49 (c), (d), (f), (g), and (m). Those statutes include the Federal Railroad Safety Act of 1970 (''Safety Act''), 45 U.S.C. 421 *et seq.*, and a group of statutes enacted prior to 1970 referred to collectively herein as the ''older safety statutes'': The Safety Appliance Acts, 45 U.S.C. 1–16; the Locomotive Inspection Act, 45 U.S.C. 22–34; the Accident Reports Act, 45 U.S.C. 38–43; the Hours of Service Act, 45 U.S.C. 61–64b; and the Signal Inspection Act, 49 App. U.S.C. 26. Regulations implementing those statutes are found at 49 CFR parts 213 through 236. The Rail Safety Improvement Act of 1988 (Pub. L. No. 100–342, enacted June 22, 1988) (''RSIA'') raised the maximum civil penalties available under the railroad safety

laws and made individuals liable for willful violations of those laws. FRA also enforces the Hazardous Materials Transportation Act, 49 App. U.S.C. 1801 *et seq.*, as it pertains to the shipment or transportation of hazardous materials by rail.

THE CIVIL PENALTY PROCESS

The front lines in the civil penalty process are the FRA safety inspectors: FRA employs over 300 inspectors, and their work is supplemented by approximately 100 inspectors from states participating in enforcement of the federal rail safety laws. These inspectors routinely inspect the equipment, track, and signal systems and observe the operations of the nation's railroads. They also investigate hundreds of complaints filed annually by those alleging noncompliance with the laws. When inspection or complaint investigation reveals noncompliance with the laws, each noncomplying condition or action is listed on an inspection report. Where the inspector determines that the best method of promoting compliance is to assess a civil penalty, he or she prepares a violation report, which is essentially a recommendation to the FRA Office of Chief Counsel to assess a penalty based on the evidence provided in or with the report.

In determining which instances of noncompliance merit penalty recommendations, the inspector considers:

(1) The inherent seriousness of the condition or action;

(2) The kind and degree of potential safety hazard the condition or action poses in light of the immediate factual situation;

(3) Any actual harm to persons or property already caused by the condition or action;

(4) The offending person's (*i.e.*, railroad's or individual's) general level of current compliance as revealed by the inspection as a whole;

(5) The person's recent history of compliance with the relevant set of regulations, especially at the specific location or division of the railroad involved;

(6) Whether a remedy other than a civil penalty (ranging from a warning on up to an emergency order) is more appropriate under all of the facts; and

(7) Such other factors as the immediate circumstances make relevant.

The civil penalty recommendation is reviewed at the regional level by a specialist in the subject matter involved, who requires correction of any technical flaws and determines whether the recommendation is consistent with national enforcement policy in similar circumstances. Guidance on that policy in close cases is sometimes sought from Office of Safety headquarters. Violation reports that are technically and legally sufficient and in accord with FRA policy are sent from the regional office to the Office of Chief Counsel.

The exercise of this discretion at the field and regional levels is a vital part of the enforcement process, ensuring that the exacting and time-consuming civil penalty process is used to address those situations most in need of the deterrent effect of penalties. FRA exercises that discretion with regard to individual violators in the same manner it does with respect to railroads.

The Office of Chief Counsel's Safety Division reviews each violation report it receives from the regional offices for legal sufficiency and assesses penalties based on those allegations that survive that review. Historically, the Division has returned to the regional offices less than five percent of the reports submitted in a given year, often with a request for further work and resubmission.

Where the violation was committed by a railroad, penalties are assessed by issuance of a penalty demand letter that summarizes the claims, encloses the violation report with a copy of all evidence on which FRA is relying in making its initial charge, and explains that the railroad may pay in full or submit, orally or in writing, information concerning any defenses or mitigating factors. The railroad safety statutes, in conjunction with the Federal Claims Collection Act, authorize FRA to adjust or compromise the initial penalty claims based on a wide variety of mitigating factors. This system permits the efficient collection of civil penalties in amounts that fit the actual offense without resort to time-consuming and expensive litigation. Over its history, FRA has had to request that the Attorney General bring suit to collect a penalty on only a very few occasions.

Once penalties have been assessed, the railroad is given a reasonable amount of time to investigate the charges. Larger railroads usually make their case before FRA in an informal conference covering a number of case files that have been issued and investigated since the previous conference. Thus, in terms of the negotiating time of both sides, economies of scale are achieved that would be impossible if each case were negotiated separately. The settlement conferences, held either in Washington or another mutually agreed on location, include technical experts from both FRA and the railroad as well as lawyers for both parties. In addition to allowing the two sides to make their cases for the relative merits of the various claims, these conferences also provide a forum for addressing current compliance problems. Smaller railroads usually prefer to handle negotiations through the mail or over the telephone, often on a single case at a time. Once the two sides have agreed to an amount on each case, that agreement is put in writing and a check is submitted to FRA's accounting division covering the full amount agreed on.

Cases brought under the Hazardous Materials Transportation Act, 49 App. U.S.C. 1801 *et seq.*, are, due to certain statutory requirements, handled under more formal administrative procedures. *See* 49 CFR part 209, subpart B.

CIVIL PENALTIES AGAINST INDIVIDUALS

The RSIA amended the penalty provisions of the railroad safety statutes to make them applicable to any ''person (including a railroad and any manager, supervisor, official, or other employee or agent of a railroad)'' who fails to comply with the regulations or statutes. *E.g.*, section 3 of the RSIA, amending section 209 of the Safety Act. However, the RSIA also provided that civil penalties may be assessed against individuals ''only for willful violations.''

Thus, any individual meeting the statutory description of ''person'' is liable for a civil penalty for a willful violation of, or for willfully causing the violation of, the safety statutes or regulations. Of course, as has traditionally been the case with respect to acts of noncompliance by railroads, the FRA field inspector exercises discretion in deciding which situations call for a civil penalty assessment as the best method of ensuring compliance. The inspector has a range of options, including an informal warning, a more formal warning letter issued by the Safety Division of the Office of Chief Counsel, recommendation of a civil penalty assessment, recommendation of disqualification or suspension from safety-sensitive service, or, under the most extreme circumstances, recommendation of emergency action.

The threshold question in any alleged violation by an individual will be whether that violation was ''willful.'' (Note that section 3(a) of the RSIA, which authorizes suspension or disqualification of a person whose violation of the safety laws has shown him or her to be unfit for safety-sensitive service, does not require a showing of willfulness. Regulations implementing that provision are found at 49 CFR part 209, subpart D.) FRA proposed this standard of liability when, in 1987, it originally proposed a statutory revision authorizing civil penalties against individuals. FRA believed then that it would be too harsh a system to collect fines from individuals on a strict liability basis, as the safety statutes permit FRA to do with respect to railroads. FRA also believed that even a reasonable care standard (*e.g.*, the Hazardous Materials Transportation Act's standard for civil penalty liability, 49 U.S.C. 1809(a)) would subject individuals to civil penalties in more situations than the record warranted. Instead, FRA wanted the authority to penalize those who violate the safety laws through a purposeful act of free will.

Thus, FRA considers a ''willful'' violation to be one that is an intentional, voluntary act committed either with knowledge of the relevant law or reckless disregard for whether the act violated the requirements of the law. Accordingly, neither a showing of evil purpose (as is sometimes required in certain criminal cases) nor actual knowledge of the law is necessary to prove a willful violation, but a level of culpability higher than negligence must be demonstrated. *See Trans World Airlines, Inc.* v. *Thurston*, 469 U.S. 111 (1985); *Brock* v. *Morello Bros. Constr., Inc.* 809 F.2d 161 (1st Cir. 1987); and *Donovan* v. *Williams Enterprises, Inc.*, 744 F.2d 170 (D.C. Cir. 1984).

Reckless disregard for the requirements of the law can be demonstrated in many ways. Evidence that a person was trained on or made aware of the specific rule involved—or, as is more likely, its corresponding industry equivalent—would suffice. Moreover, certain requirements are so obviously fundamental to safe railroading (*e.g.*, the prohibition against disabling an automatic train control device) that any violation of them, regardless of whether the person was actually aware of the prohibition, should be seen as reckless disregard of the law. *See Brock, supra*, 809 F.2d 164. Thus, a lack of subjective knowledge of the law is no impediment to a finding of willfulness. If it were, a mere denial of the content of the particular regulation would provide a defense. Having proposed use of the word ''willful,'' FRA believes it was not intended to insulate from liability those who simply claim—contrary to the established facts of the case—they had no reason to believe their conduct was wrongful.

A willful violation entails knowledge of the facts constituting the violation, but actual, subjective knowledge need not be demonstrated. It will suffice to show objectively what the alleged violator must have known of the facts based on reasonable inferences drawn from the circumstances. For example, a person shown to have been responsible for performing an initial terminal air brake test that was not in fact performed would not be able to defend against a charge of a willful violation simply by claiming subjective ignorance of the fact that the test was not performed. If the facts, taken as a whole, demonstrated that the person was responsible for doing the test and had no reason to believe it was performed by others, and if that person was shown to have acted with actual knowledge of or reckless disregard for the law requiring such a test, he or she would be subject to a civil penalty.

This definition of ''willful'' fits squarely within the parameters for willful acts laid out by Congress in the RSIA and its legislative history. Section 3(a) of the RSIA amends the Safety Act to provide:

For purposes of this section, an individual shall be deemed not to have committed a willful violation where such individual has

acted pursuant to the direct order of a railroad official or supervisor, under protest communicated to the supervisor. Such individual shall have the right to document such protest.

As FRA made clear when it recommended legislation granting individual penalty authority, a railroad employee should not have to choose between liability for a civil penalty or insubordination charges by the railroad. Where an employee (or even a supervisor) violates the law under a direct order from a supervisor, he or she does not do so of his or her free will. Thus, the act is not a voluntary one and, therefore, not willful under FRA's definition of the word. Instead, the action of the person who has directly ordered the commission of the violation is itself a willful violation subjecting that person to a civil penalty. As one of the primary sponsors of the RSIA said on the Senate floor:

This amendment also seeks to clarify that the purpose of imposing civil penalties against individuals is to deter those who, of their free will, decide to violate the safety laws. The purpose is not to penalize those who are ordered to commit violations by those above them in the railroad chain of command. Rather, in such cases, the railroad official or supervisor who orders the others to violate the law would be liable for any violations his order caused to occur. One example is the movement of railroad cars or locomotives that are actually known to contain certain defective conditions. A train crew member who was ordered to move such equipment would not be liable for a civil penalty, and his participation in such movements could not be used against him in any disqualification proceeding brought by FRA. 133 Cong. Rec. S.15899 (daily ed. Nov. 5, 1987) (remarks of Senator Exon).

It should be noted that FRA will apply the same definition of ''willful'' to corporate acts as is set out here with regard to individual violations. Although railroads are strictly liable for violations of the railroad safety laws and deemed to have knowledge of those laws, FRA's penalty schedules contain, for each regulation, a separate amount earmarked as the initial assessment for willful violations. Where FRA seeks such an extraordinary penalty from a railroad, it will apply the definition of ''willful'' set forth above. In such cases—as in all civil penalty cases brought by FRA—the aggregate knowledge and actions of the railroad's managers, supervisors, employees, and other agents will be imputed to the railroad. Thus, in situations that FRA decides warrant a civil penalty based on a willful violation, FRA will have the option of citing the railroad and/or one or more of the individuals involved. In cases against railroads other than those in which FRA alleges willfulness or in which a particular regulation imposes a special standard, the principles of strict liability and presumed knowledge of the law will continue to apply.

The RSIA gives individuals the right to protest a direct order to violate the law and to document the protest. FRA will consider such protests and supporting documentation in deciding whether and against whom to cite civil penalties in a particular situation. Where such a direct order has been shown to have been given as alleged, and where such a protest is shown to have been communicated to the supervisor, the person or persons communicating it will have demonstrated their lack of willfulness. Any documentation of the protest will be considered along with all other evidence in determining whether the alleged order to violate was in fact given.

However, the absence of such a protest will not be viewed as warranting a presumption of willfulness on the part of the employee who might have communicated it. The statute says that a person who communicates such a protest shall be deemed not to have acted willfully; it does not say that a person who does not communicate such a protest will be deemed to have acted willfully. FRA would have to prove from all the pertinent facts that the employee willfully violated the law. Moreover, the absence of a protest would not be dispositive with regard to the willfulness of a supervisor who issued a direct order to violate the law. That is, the supervisor who allegedly issued an order to violate will not be able to rely on the employee's failure to protest the order as a complete defense. Rather, the issue will be whether, in view of all pertinent facts, the supervisor intentionally and voluntarily ordered the employee to commit an act that the supervisor knew would violate the law or acted with reckless disregard for whether it violated the law.

FRA exercises the civil penalty authority over individuals through informal procedures very similar to those used with respect to railroad violations. However, FRA varies those procedures somewhat to account for differences that may exist between the railroad's ability to defend itself against a civil penalty charge and an individual's ability to do so. First, when the field inspector decides that an individual's actions warrant a civil penalty recommendation and drafts a violation report, the inspector or the regional director informs the individual in writing of his or her intention to seek assessment of a civil penalty and the fact that a violation report has been transmitted to the Office of Chief Counsel. This ensures that the individual has the opportunity to seek counsel, preserve documents, or take any other necessary steps to aid his or her defense at the earliest possible time.

Second, if the Office of Chief Counsel concludes that the case is meritorious and issues a penalty demand letter, that letter makes clear that FRA encourages discussion, through the mail, over the telephone or in person, of any defenses or mitigating factors the individual may wish to raise. That letter also advises the individual that he or she may wish to obtain representation by an attorney and/or labor representative. During the negotiation stage, FRA considers each case individually on its merits and gives due weight to whatever information the alleged violator provides.

Finally, in the unlikely event that a settlement cannot be reached, FRA sends the individual a letter warning of its intention to request that the Attorney General sue for the initially proposed amount and giving the person a sufficient interval (*e.g.,* 30 days) to decide if that is the only alternative.

FRA believes that the intent of Congress would be violated if individuals who agree to pay a civil penalty or are ordered to do so by a court are indemnified for that penalty by the railroad or another institution (such as a labor organization). Congress intended that the penalties have a deterrent effect on individual behavior that would be lessened, if not eliminated, by such indemnification.

Although informal, face-to-face meetings are encouraged during the negotiation of a civil penalty charge, the RSIA does not require that FRA give individuals or railroads the opportunity for a formal, trial-type administrative hearing as part of the civil penalty process. FRA does not provide that opportunity because such administrative hearings would be likely to add significantly to the costs an individual would have to bear in defense of a safety claim (and also to FRA's enforcement expenses) without shedding any more light on what resolution of the matter is fair than would the informal procedures set forth here. Of course, should an individual or railroad decide not to settle, that person would be entitled to a trial *de novo* when FRA, through the Attorney General, sued to collect the penalty in the appropriate United States district court.

PENALTY SCHEDULES; ASSESSMENT OF MAXIMUM PENALTIES

As recommended by the Department of Transportation in its initial proposal for rail safety legislative revisions in 1987, the RSIA raised the maximum civil penalties for violations of the safety regulations. Under the Hours of Service Act, the penalty was changed from a flat $500 to a penalty of ''up to $1,000, as the Secretary of Transportation deems reasonable.'' Under all the other statutes, the maximum penalty was raised from $2,500 to $10,000 per violation, except that, ''where a grossly negligent violation or pattern of repeated violations has created an imminent hazard of death or injury to persons, or has caused death or injury,'' a penalty of up to $20,000 per violation may be assessed.

FRA's traditional practice has been to issue penalty schedules assigning to each particular regulation specific dollar amounts for initial penalty assessments. The schedule (except where issued after notice and an opportunity for comment) constitutes a statement of agency policy, and is ordinarily issued as an appendix to the relevant part of the Code of Federal Regulations. For each regulation, the schedule shows two amounts within the $250 to $10,000 range in separate columns, the first for ordinary violations, the second for willful violations (whether committed by railroads or individuals). In one instance—part 231—the schedule refers to sections of the relevant FRA defect code rather than to sections of the CFR text. Of course, the defect code, which is simply a reorganized version of the CFR text used by FRA to facilitate computerization of inspection data, is substantively identical to the CFR text.

The schedule amounts are meant to provide guidance as to FRA's policy in predictable situations, not to bind FRA from using the full range of penalty authority where extraordinary circumstances warrant. The Senate report on the bill that became the RSIA stated:

> It is expected that the Secretary would act expeditiously to set penalty levels commensurate with the severity of the violations, with imposition of the maximum penalty reserved for violation of any regulation where warranted by exceptional circumstances.

S. Rep. No. 100–153, 100th Cong., 2d Sess. 8 (1987).

Accordingly, under each of the schedules (ordinarily in a footnote), and regardless of the fact that a lesser amount might be shown in both columns of the schedule, FRA reserves the right to assess the statutory maximum penalty of up to $20,000 per violation where a grossly negligent violation or a pattern of repeated violations has created an imminent hazard of death or injury to persons, or has caused death or injury. This authority to assess a penalty for a single violation above $10,000 and up to $20,000 is used only in very exceptional cases to penalize egregious behavior. Where FRA avails itself of this right to use the higher penalties in place of the schedule amount it so indicates in its penalty demand letter.

THE EXTENT AND EXERCISE OF FRA'S SAFETY JURISDICTION

The Safety Act and, as amended by the RSIA, the older safety statutes apply to ''railroads.'' Section 202(e) of the Safety Act defines railroad as follows:

> The term ''railroad'' as used in this title means all forms of non-highway ground

transportation that run on rails or electromagnetic guideways, including (1) commuter or other short-haul rail passenger service in a metropolitan or suburban area, as well as any commuter rail service which was operated by the Consolidated Rail Corporation as of January 1, 1979, and (2) high speed ground transportation systems that connect metropolitan areas, without regard to whether they use new technologies not associated with traditional railroads. Such term does not include rapid transit operations within an urban area that are not connected to the general railroad system of transportation.

Prior to 1988, the older safety statutes had applied only to common carriers engaged in interstate or foreign commerce by rail. The Safety Act, by contrast, was intended to reach as far as the Commerce Clause of the Constitution (i.e., to all railroads that affect interstate commerce) rather than be limited to common carriers actually engaged in interstate commerce. In reporting out the bill that became the 1970 Safety Act, the House Committee on Interstate and Foreign Commerce stated:

The Secretary's authority to regulate extends to all areas of railroad safety. This legislation is intended to encompass all those means of rail transportation as are commonly included within the term. Thus, ''railroad'' is not limited to the confines of ''common carrier by railroad'' as that language is defined in the Interstate Commerce Act.

H.R. Rep. No. 91–1194, 91st Cong., 2d Sess. at 16 (1970).

FRA's jurisdiction was bifurcated until, in 1988, the RSIA amended the older safety statutes to make them coextensive with the Safety Act by making them applicable to railroads and incorporating the Safety Act's definition of the term (*e.g.*, 45 U.S.C. 16, as amended). The RSIA also made clear that FRA's safety jurisdiction is not confined to entities using traditional railroad technology. The new definition of ''railroad'' emphasized that all non-highway high speed ground transportation systems—regardless of technology used—would be considered railroads.

Thus, with the exception of self-contained urban rapid transit systems, FRA's statutory jurisdiction extends to all entities that can be construed as railroads by virtue of their providing non-highway ground transportation over rails or electromagnetic guideways, and will extend to future railroads using other technologies not yet in use. For policy reasons, however, FRA does not exercise jurisdiction under all of its regulations to the full extent permitted by statute. Based on its knowledge of where the safety problems were occurring at the time of its regulatory action and its assessment of the practical limitations on its role, FRA has, in each regulatory context, decided that the best option was to regulate something less than the total universe of railroads.

For example, all of FRA's regulations exclude from their reach railroads whose entire operations are confined to an industrial installation, *i.e.*, ''plant railroads'' such as those in steel mills that do not go beyond the plant's boundaries. *E.g.*, 49 CFR 225.3 (accident reporting regulations). Other regulations (*e.g.*, 49 CFR 213.3, track safety regulations) exclude not only plant railroads but all other railroads that are not part of, or operated over, the ''general railroad system of transportation,'' *i.e.*, the network of standard gage railroads over which the interchange of goods and passengers throughout the nation is possible—including even certain railroads not physically connected to the continental system, such as a freight railroad in Alaska with which other American railroads interchange cars by means of intermediate modes of transport. (Note that FRA proposed the ''general system'' language now found in section 202(e) of the Safety Act, and its construction of that language is not bound by construction of similar phrases used in other statutes, *e.g.*, 45 U.S.C. 151 First; those similar phrases are generally part of provisions in those laws limiting their reach—unlike that of the amended safety laws—to ''common carriers engaged in interstate commerce.'')

Of course, even where a railroad operates outside the general system, other railroads that are definitely part of that system may have occasion to enter the first railroad's property (*e.g.*, a major railroad goes into a chemical or auto plant to pick up or set out cars). In such cases, the railroad that is part of the general system remains part of that system while inside the installation; thus, all of its activities are covered by FRA's regulations during that period. The plant railroad itself, however, does not get swept into the general system by virtue of the other railroad's activity, except to the extent it is liable, as the track owner, for the condition of its track over which the other railroad operates during its incursion into the plant. Of course, in the opposite situation, where the plant railroad itself operates beyond the plant boundaries on the general system, it becomes a railroad with respect to those particular operations, during which its equipment, crew, and practices would be subject to FRA's regulations.

In some cases, the plant railroad leases track immediately adjacent to its plant from the general system railroad. Assuming such a lease provides for, and actual practice entails, the exclusive use of that trackage by the plant railroad and the general system railroad for purposes of moving only cars shipped to or from the plant, the lease would remove the plant railroad's operations on that trackage from the general system for purposes of FRA's regulations, as it would

make that trackage part and parcel of the industrial installation. (As explained above, however, the track itself would have to meet FRA's standards if a general system railroad operated over it. *See* 49 CFR 213.5 for the rules on how an owner of track may assign responsibility for it.) A lease or practice that permitted other types of movements by general system railroads on that trackage would, of course, bring it back into the general system, as would operations by the plant railroad indicating it was moving cars on such trackage for other than its own purposes (*e.g.*, moving cars to neighboring industries for hire).

It is important to note that FRA's exercise of its regulatory authority on a given matter does not preclude it from subsequently amending its regulations on that subject to bring in railroads originally excluded. More important, the self-imposed restrictions on FRA's exercise of regulatory authority in no way constrain its exercise of emergency order authority under section 203 of the Safety Act. That authority was designed to deal with imminent hazards not dealt with by existing regulations and/or so dangerous as to require immediate, *ex parte* action on the government's part. Thus, a railroad excluded from the reach of any of FRA's regulations is fully within the reach of FRA's emergency order authority, which is coextensive with FRA's statutory jurisdiction over all railroads.

EXTRAORDINARY REMEDIES

While civil penalties are the primary enforcement tool under the federal railroad safety laws, more extreme measures are available under certain circumstances. FRA has authority to issue orders directing compliance with the Federal Railroad Safety Act, the Hazardous Materials Transportation Act, the older safety statutes, or regulations issued under any of those statutes. *See* 45 U.S.C. 437(a) and (d), and 49 App. U.S.C. 1808(a). Such an order may issue only after notice and opportunity for a hearing in accordance with the procedures set forth in 49 CFR part 209, subpart C. FRA inspectors also have the authority to issue a special notice requiring repairs where a locomotive or freight car is unsafe for further service or where a segment of track does not meet the standards for the class at which the track is being operated. Such a special notice may be appealed to the regional director and the FRA Administrator. *See* 49 CFR part 216, subpart B.

FRA may, through the Attorney General, also seek injunctive relief in federal district court to restrain violations or enforce rules issued under the railroad safety laws. *See* 45 U.S.C. 439 and 49 App. U.S.C. 1810.

FRA also has the authority to issue, after notice and an opportunity for a hearing, an order prohibiting an individual from performing safety-sensitive functions in the rail industry for a specified period. This disqualification authority is exercised under procedures found at 49 CFR part 209, subpart D.

Criminal penalties are available for willful violations of the Hazardous Materials Transportation Act or its regulations. *See* 49 App. U.S.C. 1809(b), and 49 CFR 209.131, 133. Criminal penalties are also available under 45 U.S.C. 438(e) for knowingly and willfully falsifying, destroying, or failing to complete records or reports required to be kept under the various railroad safety statutes and regulations. The Accident Reports Act, 45 U.S.C. 39, also contains criminal penalties.

Perhaps FRA's most sweeping enforcement tool is its authority to issue emergency safety orders ''where an unsafe condition or practice, or a combination of unsafe conditions or practices, or both, create an emergency situation involving a hazard of death or injury to persons * * *'' 45 U.S.C. 432(a). After its issuance, such an order may be reviewed in a trial-type hearing. See 49 CFR 211.47 and 216.21 through 216.27. The emergency order authority is unique because it can be used to address unsafe conditions and practices whether or not they contravene an existing regulatory or statutory requirement. Given its extraordinary nature, FRA has used the emergency order authority sparingly.

[53 FR 52920, Dec. 29, 1988]

APPENDIX B TO PART 209—FEDERAL RAILROAD ADMINISTRATION GUIDELINES FOR INITIAL HAZARDOUS MATERIALS ASSESSMENTS

These guidelines establish benchmarks to be used in determining initial civil penalty assessments for violations of the Hazardous Materials Regulations (HMR). The guideline penalty amounts reflect the best judgment of the FRA Office of Safety Assurance and Compliance (RRS) and of the Safety Law Division of the Office of Chief Counsel (RCC) on the relative severity, on a scale of $250 to $25,000, of the various violations routinely encountered by FRA inspectors. (49 U.S.C. 5123) Unless otherwise specified, the guideline amounts refer to average violations, that is, violations involving a hazardous material with a medium level of hazard, and a violator with an average compliance history. In an ''average violation,'' the respondent has committed the acts due to a failure to exercise reasonable care under the circumstances (''knowingly''). For some sections, the guidelines contain a breakdown according to relative severity of the violation, for example, the guidelines for shipping paper violations at 49 CFR §§ 172.200–.203. *All* penalties in these guidelines are subject to change depending upon the circumstances of

the particular case. The general duty sections, for example §§173.1 and 174.7, are not ordinarily cited as separate violations; they are primarily used as explanatory citations to demonstrate applicability of a more specific section where applicability is otherwise unclear.

FRA believes that infractions of the regulations that lead to personal injury are especially serious; this is directly in line with Department of Transportation policy that hazardous materials are only safe for transportation when they are securely sealed in a proper package. (Some few containers, such as tank cars of carbon dioxide, are designed to vent off excess internal pressure. They are exceptions to the ''securely sealed'' rule.) ''Personal injury'' has become somewhat of a term of art, especially in the fields of occupational safety and of accident reporting. To avoid confusion, these penalty guidelines use the notion of ''human contact'' to trigger penalty aggravation. In essence, *any* contact by a hazardous material on a person during transportation is a per se injury and proof will not be required regarding the extent of the physical contact or its consequences. When a violation of the Hazardous Materials Regulations *causes* a death or serious injury, the maximum penalty of $25,000 shall always be assessed initially.

These guidelines are a preliminary assessment tool for FRA's use. They create no rights in any party. FRA is free to vary from them when it deems appropriate and may amend them from time to time without prior notice. Moreover, FRA is not bound by any amount it initially proposes should litigation become necessary. In fact, FRA reserves the express authority to amend the NOPV to seek a penalty of up to $25,000 for each violation at any time prior to issuance of an order.

PENALTY ASSESSMENT GUIDELINES

Emergency orders		Guideline
EO16	Penalties for violations of EO16 vary depending on the circumstances	5,000
EO17	Penalties for violations of EO17 vary depending on the circumstances	(1)
	Failure to file annual report	5,000

[1] Varies.

49 CFR section	Description	Guideline
	PART 107	
107.608	Failure to register or to renew registration. (Note: registration—or renewal—is mitigation.).	1,000
	PART 171	
171.2(c)	Representing (marking, certifying, selling, or offering) a packaging as meeting regulatory specification when it does not.	8,000
171.2(f)(2)	Billing, marking, etc. for the presence of HM when no HM is present. (Mitigation required for shipments smaller than a carload, i.e., single drum penalty is 1,000).	2,000
171.12	Import shipments—Importer not providing shipper and forwarding agent with US requirements. Cannot be based on inference.	4,000
	Import shipments—Failure to certify by shipper or forwarding agent	2,000
171.15	Failure to provide immediate notice of certain hazardous materials incidents.	6,000
171.16	Failure to file incident report (form DOT 5800.1). (Note: Multiple failures will aggravate the penalty; see the expert attorney.).	4,000
	PART 172	
Shipping Papers:		
172.200—.203	Offering hazardous materials for transportation when the material is not properly described on the shipping paper as required by §§172.200—.203. (The ''shipping paper'' is the document tendered by the shipper/offeror to the carrier. The original shipping paper contains the shipper's certification at §172.204.).	
	—Information on the shipping paper is wrong to the extent that it caused or materially contributed to a reaction by emergency responders that aggravated the situation or caused or materially contributed to improper handling by the carrier that led to or materially contributed to a product release.	15,000
	—Total lack of hazardous materials information on shipping paper. (Some shipping names alone contain sufficient information to reduce the guideline to the next lower level, but they may be such dangerous products that aggravation needs to be considered.).	7,500

49 CFR section	Description	Guideline
	—Some information is present but the missing or improper description could cause mishandling by the carrier or a delay or error in emergency response.	5,000
	—When the improper description is not likely to cause serious problem (technical defect).	2,000
	—Shipping paper includes a hazardous materials description and no hazardous materials are present.	7,500
	Note: Failure to include emergency response information is covered at §§172.600–604; while the normal unit of violation for shipping papers is the whole document, failure to provide emergency response information *is* a separate violation.	
172.204	Shipper's failure to certify	2,000
172.205	Hazardous waste manifest. (Applies only to defects in the Hazardous Waste Manifest form [EPA Form 8700–22 and 8700–22A]; shipping paper defects are cited and penalized under §172.200–.203.).	4,000
Marking	The guidelines for ''marking'' violations contemplate a total lack of the prescribed mark. Obviously, where the package (including a whole car) is partially marked, mitigation should be applied.	
172.301	Failure to mark a non-bulk package as required (e.g., no commodity name on a 55-gallon drum). (Shipment is the unit of violation.).	1,000
172.302	Failure to follow standards for marking bulk packaging. (Note: If a more specific section applies, cite it and its penalty guideline.).	2,000
172.302(a)	ID number missing or in improper location. (The guideline is for a portable tank; for smaller bulk packages, the guideline should be mitigated downward.).	2,500
172.302(b)	Failure to use the correct *size* of markings. (Note: If §172.326(a) is also cited, it takes precedence and .302(b) is not cited. Note also: the guideline is for a gross violation of marking size—½″ where 2″ is required—and mitigation should be considered for markings approaching the required size.).	2,000
172.302(c)	Failure to place exemption number markings on bulk package	2,000
172.303	Prohibited marking. (Package is marked for a hazardous material and contains either another hazardous material or no hazardous material.)	
	—The marking is wrong and caused or contributed to a wrong emergency response.	10,000
	—Inconsistent marking; e.g., Shipping name and ID number do not agree	5,000
	—Marked as a hazardous material when package does not contain a hazardous material.	2,000
172.313	''Inhalation Hazard'' not marked	2,500
172.322	Failure to mark for MARINE POLLUTANT where required	1,500
172.325(a)	Improper, or missing, HOT mark for elevated temperature material	1,500
172.326(a)	Failure to mark a portable tank with the commodity name	2,500
172.326(b)	Owner's/lessee's name not displayed	500
172.326(c)	Failure to mark portable tank with ID number	2,500
172.330(a)(1)(i)	Offering/transporting hazardous materials in a tank car that does not have the required shipping name or common name stenciled on the car; include reference to section requiring stenciling, such as §173.314(b) (5) or (6).	2,500
172.330(a)(1)(ii)	Offering/transporting hazardous materials in a tank car that does not have the required ID number displayed on the car.	2,500
172.331(b)	Offering bulk packaging other than a portable tank, cargo tank, or tank car (e.g., a hopper car) not marked with UN/NA number. (I.e., a hopper car carrying a hazardous substance, where a placard is not required).	2,500
172.332	Improper display of identification number markings. Note: Citation of this section and §§172.326 (portable tanks), 172.328 (cargo tanks), or 172.330 (tank cars) does not create two separate violations.	2,000
172.334(a)	Displaying ID numbers on a RADIOACTIVE, EXPLOSIVES 1.1,1.2,1.3,1.4,1.5, or 1.6, or DANGEROUS, or subsidiary hazard placard.	4,000
172.334(b)	—Improper display of ID number that caused or contributed to a wrong emergency response.	15,000
	—Improper display of ID number that could cause carrier mishandling or minor error in emergency response.	5,000
	—Technical error	2,000
172.334(f)	Displaying ID number on orange panel not in proximity to the placard	1,500
Labeling:		
172.400–.450	Failure to label properly. (See also §172.301 regarding the marking of packages.).	2,500
Placarding	The guidelines for ''placarding'' violations contemplate a total lack of the prescribed placard. Obviously, where the package (including a whole car) is partially placarded, mitigation should be applied.	
172.502	—Placarded as hazardous material when car does not contain a hazardous material.	2,000
	—Placard does not represent hazard of the contents	2,000

49 CFR section	Description	Guideline
	—Display of sign or device that could be confused with regulatory placard. Photograph or good, clear description necessary.	2,000
172.503	Improper display of ID number on placards. (Note: Do not cite this section; cite § 172.334.).	(1)
172.504(a)	Failure to placard; affixing or displaying wrong placard. (See also §§ 172.502(a), 172.504(a), 172.505, 172.510(c), 172.516, 174.33, 174.59, 174.69; all applicable sections should be cited, but the penalty should be set at the amount for the violation most directly in point.) (Generally, the car is the unit of violation, and penalties vary with the number of errors, typically at the rate of $1,000 per placard.)	
	—Complete failure to placard	7,500
	—One placard missing (add $1,000 per missing placard up to a total of three; then use the guideline above).	1,000
	— Complete failure to placard, but only 2 placards are required (e.g., intermediate bulk containers [IBCs]).	2,500
172.504(b)	Improper use of DANGEROUS placard for mixed loads	5,000
172.504(c)	Placarded for wrong hazard class when no placard was required due to 1,001 pound exemption.	2,000
172.504(e)	Use of placard other than as specified in the table:	
	—Improper placard caused or contributed to improper reaction by emergency response forces or caused or contributed to improper handling by carrier that led to a product release.	15,000
	—Improper placard that could cause improper emergency response or handling by carrier.	5,000
	—Technical violation	2,500
172.505	Improper application of placards for subsidiary hazards. (Note: This is in addition to any violation on the primary hazard placards.).	5,000
172.508(a)	Offering hazardous material for rail transportation without affixing placards. (Note: The preferred section for a total failure to placard is 172.504(a); only one section should be cited to avoid a dual penalty.) (Note also: Persons offering hazardous materials for rail movement must *affix* placards; if offering for highway movement, the placards must be *tendered* to the carrier. § 172.506.).	7,500
	Placards OK, except they were IMDG labels instead of 10″ placards. (Unit of violation is the packaging, usually a portable tank.).	500
	Placards on TOFC/COFC units not readily visible. (Note: Do not cite this section, cite § 172.516 instead.).	(2)
172.508(b)	Accepting hazardous material for rail transportation without placards affixed.	5,000
172.510(a)	EXPLOSIVES 1.1, EXPLOSIVES 1.2, POISON GAS, POISON GAS-RESIDUE, (Division 2.3, Hazard Zone A), POISON, or POISON-RESIDUE (Division 6.1, Packing Group I, Hazard Zone A) placards displayed without square background.	5,000
172.510(c)	Improper use of RESIDUE placard.	
	—Placarded RESIDUE when loaded	4,000
	—Placarded loaded when car contains only a residue	1,000
	—Placarded EMPTY when RESIDUE is required	500
172.514	Improper placarding of bulk packaging other than a tank car: For the ''exception'' packages in 174.514(c). Note: Use the regular placarding sections for the guideline amounts for larger bulk packages.	2,000
172.516	Placard not readily visible, improperly located or displayed, or deteriorated. Good color photos ''essential'' to prove deterioration, and considerable weathering is permissible. Placard is the unit of violation.	1,000
	—When placards on an intermodal container are not visible, for instance, because the container is in a well car. Container is the unit of violation, and, as a matter of enforcement policy, FRA accepts the lack of visibility of the end placards.	2,000
Emergency Response Information	Violations of §§ 172.600–.604 are in addition to shipping paper violations. In citing a carrier, if the railroad's practice is to carry an emergency response book or to put the E/R information as an attachment to the consist, the unit of violation is generally the train (or the consist). ''Telephone number'' violations are generally best cited against the shipper; if against a railroad, there should be proof that the number was given to the railroad, that is, it was on the original shipping document.	
172.600–.602	Where improper emergency response information has caused an improper reaction from emergency forces and the improper response has aggravated the situation. Note: Proof of this will be rigorous. For instance, if the emergency response forces had chemical information with the correct response and they relied, instead, on shipper/carrier information to their detriment; the $15,000 penalty guideline applies.	15,000
	Bad, missing, or improper emergency response information. (Be careful in transmitting violations of this section against a railroad; there are many sources of E/R information and it does not necessarily ''travel'' with the shipping documents.).	4,000

49 CFR section	Description	Guideline
172.602(c)	Failure to have emergency response information ''immediately accessible''	15,000
172.604	Improper or missing emergency response telephone number	2,500
Training:		
172.702(a)	General failure to train hazmat employees	5,000
172.702(b)	Hazmat employee performing covered function without training. (Unit of violation is the employee; see the expert attorney if more than 10 employees are involved.).	1,000
172.704(a)	Failure to train in the required areas: —General awareness/familiarization —Function-specific —Safety (Unit of violation is the ''area,'' and, for a total failure to train, cite 172.702(a) and use that penalty instead of 172.704.)	2,500
172.704(c)	Initial and recurrent training. (Note: Cite this and the relevant substantive section, e.g., 172.702(a), and use penalty provided there.).	(3)
172.704(d)	Failure to maintain record of training. (Unit of violation is the record.)	2,500
	PART 173	
173.1	General duty section applicable to shippers; also includes subparagraph (b), the requirement to train employees about applicable regulations. (Cite the appropriate section in the 172.700–.704 series for training violations.).	2,000
173.9(a)	Early delivery of transport vehicle that has been fumigated. (48 hours must have elapsed since fumigation.).	5,000
173.9(b)	Failure to display fumigation placard. (Ordinarily cited against shipper only, not against railroad.).	1,000
173.10	Delivery requirements for gases and for flammable liquids. See also 174.204 and 174.304.	3,000
173.22	Shipper responsibility: This general duty section should ordinarily be cited only to support a more specific charge.	(4)
173.22a	Improper use of packagings authorized under exemption	2,500
	Failure to maintain copy of exemption as required.	1,000
173.24(b)(1) & 173.24(b)(2) and 173.24(f)(1) & 173.24(f)(1)(ii).	Securing closures: These subsections are the general ''no leak'' standard for all packagings. §173.24(b) deals primarily with *packaging* as a whole, while §173.24(f) focuses on *closures.* Cite the sections accordingly, using both the leak/non-leak criteria and the package size considerations to reach the appropriate penalty. Any actual leak will aggravate the guideline by, typically, 50%; a leak with contact with a human being will aggravate by at least 100%, up to the maximum of $25,000 if the HMR violation *causes* the injury. With tank cars, §173.31(b) applies, and IM portable tanks [§173.32c], and other tanks of that size range, should use the tank car penalty amounts, stated in reference to that section.	
	—Small bottle or box	1,000
	—55-gallon drum	2,500
	—Larger container, e.g., IBC; not portable tank or tank car	5,000
173.24(c)	Use of package not meeting specifications, including required stencils and markings. The most specific section for the package involved should be cited (see below). The penalty guideline should be adjusted for the size of the container. Any actual leak will aggravate the guideline by, typically, 50%; a leak with contact with a human being will aggravate by at least 100%, up to the maximum of $25,000 if the HMR violation *causes* the injury.	
	—Small bottle or box	1,000
	—55-gallon drum	2,500
	—Larger container, e.g., IBC; not portable tank or tank car	5,000
	For more specific sections: Tank cars—§173.31(a), portable tanks—§173.32, and IM portable tanks—§§173.32a, .32b, and .32c, q.v	
173.24a(a)(3)	Non-bulk packagings: Failure to secure and cushion inner packagings	1,000
	—Causes leak	3,000
	—Leak with any contact between product and any human being	10,000
173.24a(b)&(d)	Non-bulk packagings: Exceeding filling limits	1,000
	—Causes leak	3,000
	—Leak with any contact between product and any human being	10,000
173.24b(a)	Insufficient outage: —<1%	3,000
	—Causes leak	5,000
	—Leak with any contact between product and any human being	10,000
173.24b(a)(3)	Outage <5% on PIH material	5,000
	—Causes leak	7,500
	—Leak with any contact between product and any human being	10,000

49 CFR section	Description	Guideline
173.26	Loaded beyond gross weight or capacity as stated in specification. (Applies only if quantity limitations do not appear in packaging requirements of Part 173.).	5,000
173.28	Improper reuse, reconditioning, or remanufacture of packagings.	1,000
173.29(a)	Offering residue tank car for transportation when openings are not tightly closed (§ 174.67(k) is also usually applicable). The regulation requires offering ''in the same manner as when'' loaded and may be cited when a car not meeting specifications (see § 173.31(a)(1)) is released back into transportation after unloading; same guideline amount. Guidelines vary with the type of commodity involved:	
	—Hazardous material with insignificant vapor pressure and without classification as ''poison'' or ''inhalation hazard''.	2,000
	—With actual leak	5,000
	—With leak allowing the product to contact any human being	15,000
	—Hazardous material with vapor pressure (essentially any gas or compressed gas) and/or with classification as ''poison'' or ''inhalation hazard.''.	5,000
	—With actual leak	7,500
	—With leak allowing the product (or fumes or vapors) to contact any human being. (In the case of fumes, the ''contact'' must be substantial.).	15,000
	—Where only violation is failure to secure a protective housing, e.g., the covering for the gaging device.	1,000
173.30	A general duty section that should be cited with the explicit statement of the duty.	
173.31(a)(1)	Use of a tank car not meeting specifications and the ''Bulk packaging'' authorization in Column 8 of the § 172.101 Hazardous Materials Table reference is:	
	§ 173.240	1,000
	§ 173.241	2,500
	§ 173.242	5,000
	§ 173.243	5,000
	§ 173.244	7,500
	§ 173.245	7,500
	§ 173.247	1,000
	§ 173.314, .315	5,000
	—Minor defect not affecting the ability of the package to contain a hazardous material, e.g., no chain on a bottom outlet closure plug.	500
	Tank meets specification, but specification is not stenciled on car. Note: § 179.1(e) implies that only the builder has the duty here, but it is the presence of the stencil that gives the shipper the right to rely on the builder. (See § 173.22(a)(3).).	1,000
	Tank car not stenciled ''Not for flammable liquids,'' and it should be. (AAR Tank Car Manual, Appendix C, C3.03(a)5.)	
	—Most cars	2,500
	—Molten sulfur car	500
	—If flammable liquid is actually in the car	5,000
173.31(a)(4)	Use of a tank car stenciled for one commodity to transport another	5,000
173.31(a)(5)	Use of DOT-specification tank car without shelf couplers. (Note: prior to November 15, 1992, this did not apply to a car not carrying hazardous materials.).	10,000
	—Against a carrier, cite § 174.3 and this section	6,000
173.31(a)(6)	Use of non-DOT specification car without shelf couplers to carry hazardous materials. (Applies only since November 15, 1990.).	10,000
	—Against a carrier, cite § 174.3 and this section	6,000
173.31(a)(7)	Use of tank car without air brake support attachments welded to pads. (Effective July 1, 1991).	5,000
173.31(a)(15)	Tank car with nonreclosing pressure relief device used to transport Class 2 gases, Class 3 or 4 liquids, or Division 6.1 liquids, PG I or II.	7,500
173.31(a)(17)	Tank car with interior heating coils used to transport Division 2.3 or Division 6.1, PG I, based on inhalation toxicity.	7,500
173.31(b)(1), 173.31(b)(3)	Shipper failure to determine (to the extent practicable) that tank, safety appurtenances, and fittings are in proper condition for transportation; failure to properly secure closures. (Sections 173.31(b)(1) & .31(b)(3), often cited as together for loose closure violations, are taken as one violation.) The unit of violation is the car, aggravated if necessary for truly egregious condition. Sections 173.24(b) & (f) establish a ''no-leak'' design standard, and 173.31 imposes that standard on operations.	5,000
	—With actual leak of product	10,000
	—With actual leak allowing the product (or fumes or vapors) to contact any human being. (With safety *vent,* be careful because carrier might be at fault.).	15,000
	—Minor violation, e.g., bottom outlet cap loose on tank car of molten sulfur (because product is a solid when shipped).	1,000
	—Failure (.31(b)(1)) to have bottom outlet cap off during loading	1,000

49 CFR section	Description	Guideline
173.31(b)(4)	Filling and offering for transportation a tank car overdue for retest of tank, interior heater system, and/or safety relief valve. Note that the car may be filled while in-date, held, and then shipped out-of-date. (Adjust penalty if less than one month or more than one year overdue.).	6,000
173.31(c)(1)	Tank, interior heater system, and/or safety valve overdue for retest. If these conditions exist, the violation is of § 173.31(b)(4). If the violation is for improperly conducting the test(s), see the expert attorney.	
173.31(c)(10)	Failure to properly stencil a retest that was performed	1,000
173.32c	Loose closures on an IM portable tank (§ 173.24 establishes the ''tight closure'' standard; § 172.32c applies it to IM portable tanks.) (The scale of penalties is the same as for tank cars.).	5,000
	—With actual leak of product	10,000
	—With actual leak and human being contact	15,000
	—Minor violation	1,000
173.314(b)(5)	No commodity stencil, compressed gas tank car. (See also § 172.330)	2,500
173.314(c)	Compressed gas loaded in excess of filling density (same basic concept as insufficient outage).	6,000
	—''T'' car with excessive voids in the thermal coating, such that the car no longer complies with the DOT specification. Section 173.31(a)(1) requires tank cars used to transport hazardous materials to meet the requirements of the applicable specification and this section (§ 173..314(c)) lists 112T/114T cars as allowed for compressed gases.	5,000
	PART 174	
General Requirements:		
174.3	Acceptance of improperly prepared shipment. This general duty section must be accompanied by a citation to the specific section violated.	
174.7	Carrier's failure to instruct employees; cannot be based on inference; §§ 172.700-.704 are preferred citations.	(5)
174.8(b)	—Failure to inspect hazardous materials (and adjacent) cars at point where train is required to be inspected. (Unit of violation is the train.) (Note: For all ''failure to inspect'' citations, the mere presence of a nonconforming condition does not *prove* a failure to inspect.).	4,000
	—Allowing unsafe loaded placarded car to continue in transportation beyond point where inspection was required). (Unit of violation is the car.).	8,000
	—Failure to determine whether placards are in place and conform to shipping papers (at a required inspection point). (Unit of violation is the car.).	5,000
174.9(a)	Failure to properly inspect loaded, placarded tank car at origin or interchange.	4,000
174.9(b)	Loose or insecure closures on tank car containing a residue of a hazardous material. (FRA policy is that, against a railroad, this violation must be observable from the ground because, for reasons of safety, railroad inspectors do not climb on cars absent an indication of a leak.).	1,000
174.9(c)	Failure to ''card'' a tank car overdue for tank retest	3,000
174.10(c)	Offering a noncomplying shipment in interchange	3,000
174.10(d)	Offering leaking car of hazardous materials in interchange	10,000
174.12	Improper performance of intermediate shipper/carrier duties; applies to forwarders and highway carriers delivering TOFC/COFC shipments to railroads.	3,000
174.14	Failure to expedite: violation of ''48-hour rule.'' Note: does not apply to cars ''held short'' of destination or constructively placed.	1,000
General Operating Requirements	Note: This subpart (Subpart B) of Part 174 has three sections referring to shipment documentation: § 174.24 relating to *accepting* documents, § 174.25 relating to the *preparation* of movement documents, and § 174.26 relating to movement documents in the *possession* of the train crew. Only the most relevant section should be cited. In most cases, the unit of violation is the shipment, although where a unified consist is used to give notice to the crew, there is some justification for making it the train, especially where the discrepancy was generated using automated data processing and the error is repetitious.	
174.24	Accepting hazardous materials shipment without properly prepared shipping paper. (Note: The carrier's duty extends only to the document received, that is, a shipment of hazardous materials in an unplacarded transport vehicle with a shipping paper showing other than a hazardous material is not a violation against the carrier unless knowledge of the contents of the vehicle is proved. Likewise, receipt of a tank car placarded for Class 3 with a shipping paper indicating a flammable liquid does not create a carrier violation if the car, in fact, contains a corrosive. On the other hand, receipt of a placarded trailer with a shipping paper listing only FAK (''freight-all-kinds''), imposes a duty on the carrier to inquire further and to reject the shipment if it is improperly billed.)	
	—Improper hazardous materials information that could cause delay or error in emergency response.	7,500

49 CFR section	Description	Guideline
	—Total absence of hazardous materials information	5,000
	—Technical errors, not likely to cause problems, especially with emergency response.	1,000
	—Minor errors not relating to hazardous materials emergency response, e.g., not listing an exemption number and the exemption is not one affecting emergency response.	500
174.25	Preparing improper movement documents. (Similar to the requirements in §174.24, here the carrier is held responsible for preparing a movement document that accurately reflects the shipping paper tendered to it. With no hazardous materials information on the shipper's bill of lading, the carrier is not in violation—absent knowledge of hazardous contents—for preparing a nonhazardous movement document. While ''movement documents'' in the rail industry used to be waybills or switch tickets (almost exclusively), carriers are now incorporating the essential information into a consist, expanded from its former role as merely a listing of the cars in the train.)	
	—Information on the movement document is wrong to the extent that it actually caused or materially contributed to a reaction by emergency responders that aggravated the situation or caused or materially contributed to improper handling by the carrier that led to or materially contributed to a product release.	15,000
	—Total lack of hazardous materials information on movement document. (Some shipping names alone contain sufficient information to reduce the guideline to the next lower level, but they may be such dangerous products that aggravation needs to be considered.).	7,500
	—Some information is present, but the missing or improper description could cause mishandling by the carrier or a delay or error in emergency response, including missing RESIDUE description required by §174.25(c).	5,000
	—Missing/improper *endorsement,* unless on a switch ticket as allowed under §174.25(b).	3,500
	—Movement document does not indicate, for a flatcar carrying trailers or containers, which trailers or containers contain hazardous materials. (If all trailers or containers on the flatcar contain hazardous materials, there is no violation.).	2,500
	—When the improper description is not likely to cause serious problem (technical defect).	1,000
	—Minor errors not related to hazardous materials emergency response, e.g., not listing an exemption number and the exemption is not one affecting emergency response.	500
	Note: Failure to include emergency response information is covered at §172.600–604; while the normal unit of violation for movement documents is the whole document, failure to provide emergency response information *is* a separate violation.	
174.26(a)	Failure to execute the required POISON GAS and EXPLOSIVES 1.1/1.2 notices. (The notice is the unit of violation, because one notice can cover several shipments.).	5,000
	Failure to deliver the required POISON GAS and EXPLOSIVES 1.1/1.2 notices to train and engine crew. (Cite this, or the above, as appropriate.).	5,000
	Failure to transfer notice from crew to crew. (Note that this is very likely an individual liability situation; the penalty guideline listed here, however, presumes action against a railroad.).	3,000
	Failure to keep copy of notice on file	1,000
174.26(b)	Train crew does not have a document indicating position in train of each loaded, placarded car. Aggravate by 50% for Poison Gas, 2.3, and Explosives, 1.1 and 1.2. (Train is the unit of violation.).	6,000
	—Technical violation, e.g., car is listed in correct *relative* order, but not in exact numerical order, usually because of addition of car or cars to head *or* tail of train. (Note: Applies only if the *actual* location is off by 10 or fewer cars.).	1,000
174.26(c)	Improper paperwork in possession of train crew. (If the investigation of an accident reveals a violation of this section and §174.25, cite this section.) (Shipment is unit of violation, although there is justification for making it the train if a unified consist is used to carry this information and the violation is a pattern one throughout all, or almost all, of the hazardous materials shipments. For intermodal traffic, ''shipment'' can mean the container or trailer—e.g., a UPS trailer with several non-disclosed hazardous materials packages would be one unit.)	
	—Information on the document possessed by the train crew is wrong to the extent that it caused or materially contributed to a reaction by emergency responders that aggravated the situation or caused or materially contributed to improper handling by the carrier that led to or materially contributed to a product release.	15,000

49 CFR section	Description	Guideline
	—Total lack of hazardous materials information on movement document. (Some shipping names alone contain sufficient information to reduce the guideline to the next lower level, but they may be such dangerous products that aggravation needs to be considered.).	7,500
	—Some information is present but the error(s) could cause mishandling by the carrier or a delay or error in emergency response. Includes missing RESIDUE description required by § 174.25(c).	5,000
	—Improper information, but the hazardous materials are small shipments (e.g., UPS moves) and PG III (e.g., the ''low hazard'' materials allowed in TOFC/COFC service without an exemption since HM–197).	3,500
	—Technical defect not likely to cause delay or error in emergency response or carrier handling.	1,000
	—Minor error not relating to emergency response or carrier handling, e.g., not listing the exemption number on document and the exemption is not one affecting emergency response.	500
174.33	—Failure to maintain ''an adequate supply of placards.'' [The violation is for ''failure to replace''; if missing placards are replaced, the supply is obviously adequate, if not, failure to have a placard is not a separate violation from failure to replace it.]	
	—Failure to replace lost or destroyed placards based on shipping paper information. (This is in addition to the basic placarding mistakes in, for instance, § 172.504.).	1,000
	Note: A railroad's placarding duties are to *not* accept a car without placards [§ 172.508(b)]; to maintain an ''adequate supply'' of placards and to replace them based on shipping paper information [§ 174.33]; and to *not* transport a car without placards [§ 174.59]. At each inspection point, a railroad must determine that all placards are in place. [§ 172.8(b)] The ''next inspection point'' replacement requirement in § 174.59, q.v., refers to placards that disappear *between* inspection points; a car *at* an inspection point must be placarded because it is in transportation, even if held up at that point. [49 U.S.C. 5102(12)]	
174.45	Failure to report hazardous materials accidents or incidents. Cite §§ 171.15 or 171.16 as appropriate.	
174.50	Moving leaking tank car unnecessarily	7,500
	Failure to stencil leaking tank car	3,500
	Loss of product resulted in human being contact *because* of improper carrier handling.	15,000
174.55	Failure to block and brace as prescribed. (See also §§ 174.61, .63, .101, .112, .115; where these more specific sections apply, cite them.) Note: The regulatory requirement is that hazardous materials packages be loaded and securely blocked and braced to prevent the packages from changing position, falling to the floor, or sliding into each other. If the load is tight and secure, pieces of lumber or other materials may not be necessary to achieve the ''tight load'' requirement. Be careful on these and consult freely with the expert attorney and specialists in the Hazardous Materials Division.	
	—General failure to block and brace	5,000
	—Inadequate blocking and bracing (an attempt was made but blocking/bracing was insufficient.).	2,500
	—Inadequate blocking and bracing leading to a leak	7,500
	—Inadequate blocking and bracing leading to a leak and human being contact.	15,000
174.59	Marking and placarding. Note: As stated elsewhere, a railroad's placarding duties are to *not* accept a car without placards [§ 172.508(b)], to maintain an ''adequate supply'' of placards and to replace them based on shipping paper information [§ 174.33], and to *not* transport a car without placards [§ 174.59]. At each inspection point, a railroad must determine that all placards are in place. [§ 172.8(b)] The ''next inspection point'' replacement requirement in this section refers to placards that disappear *between* inspection points. A car *at* an inspection point must be placarded because it is in transportation [49 U.S.C. 5102(12)], even if held up at that point. Because the statute creates civil penalty liability only if a violation is ''knowing,'' that is, ''a reasonable person knew or should have known that an act performed by him was in violation of the HMR,'' and because railroads are not under a duty to inspect hazardous materials cars merely standing in a yard, violations written for unplacarded cars in yards must include proof that the railroad knew about the unplacarded cars and took no corrective action within a reasonable time. (Note also that the real problem with unplacarded cars in a railyard may be a lack of emergency response information, §§ 172.600–.604, and investigation may reveal that those sections should be cited instead of this one.)	
	—Complete failure to placard	7,500

49 CFR section	Description	Guideline
	—One placard missing (add $1,000 per missing placard up to a total of three; then use the guideline above).	1,000
	For other placarding violations, see §§ 172.500–.560 and determine if one of them more correctly states the violation.	
174.61	Improper transportation of transport vehicle or freight container on flat car. (Note: If improper lading restraint is the violation, see § 174.55; if improper restraint of a bulk packaging inside a closed transport vehicle is the violation, see § 174.63(b).).	3,000
174.63(a) & (c)	—Improper transportation of portable tank or other bulk packaging in TOFC/COFC service.	3,000
	—Improper transportation leading to a release of product	7,500
	—Improper transportation leading to a release and human being contact	15,000
174.63(b)	Improper securement of bulk packaging inside enclosed transport vehicle or freight container.	
	—General failure to secure	5,000
	—Inadequate securement (an attempt to secure was made but the means of securement were inadequate).	2,500
	—Inadequate securement leading to a leak	7,500
	—Inadequate securement leading to a leak and human being contact	15,000
174.63(e)	Transportation of cargo tank or multi-unit tank car tank without authorization and in the absence of an emergency.	7,500
174.67(a)(1)	Tank car unloading operations performed by persons not properly instructed (case cannot be based on inference).	2,500
174.67(a)(2)	Unloading without brakes set and/or wheels blocked. (The enforcement standard, as per 1995 Hazardous Materials Technical Resolution Committee, is that sufficient handbrakes must be applied on one or more cars to prevent movement and each car with a handbrake set must be blocked in both directions. The unloading facility must make a determination on how many brakes to set.)	
	—No brakes set, no wheels blocked, or fewer brakes set/wheels blocked than facility's operating plan.	5,000
	—No brakes set, but wheels blocked	3,000
	—Brakes set, but wheels not blocked	4,000
174.67(a)(3)	Unloading without cautions signs properly displayed. (See Part 218, Subpart B).	2,000
174.67(c)(2)	Failure to use non-metallic block to prop manway cover open while unloading through bottom outlet.	
	—Flammable or combustible liquid, or other product with a vapor flash point hazard.	3,000
	—Material with no vapor flammability hazard	500
174.67(h)	Insecure unloading connections, such that product is actually leaking	10,000
174.67(i)	Unattended unloading	5,000
174.67(j)	Discontinued unloading without disconnecting all unloading connections, tightening valves, and applying closures to all other openings. (Note: If the car is attended, this subsection does not apply.).	2,000
174.67(k)	Preparation of car after unloading: Removal of unloading connections is required, as is the closing of *all* openings with a ''suitable tool.'' Note: This subsection requires unloading connections to be ''removed'' when unloading is complete, § 174.67(j) requires them to be ''disconnected'' for a temporary cessation of unloading. The penalties recommended here mirror those in § 173.29, dealing with insecure closures generally.	
	—Hazardous material with insignificant vapor pressure and without classification as ''poison'' or ''inhalation hazard''.	2,000
	—With actual leak	5,000
	—With leak allowing the product to contact any human being	15,000
	—Hazardous material with vapor pressure (essentially any gas or compressed gas) and/or with classification as ''poison'' or ''inhalation hazard''.	5,000
	—With actual leak	7,500
	—With leak allowing the product (or fumes or vapors) to contact any human being). Note: Contact with fumes must be substantial.	15,000
174.69	—Complete failure to remove loaded placards and replace with RESIDUE placard on tank cars.	6,000
	—Partial failure. (Unit of violation is the placard; the guideline is used for each placard up to 3, then the penalty above is applicable.).	1,000
174.81	—Failure to obey segregation requirements for materials forbidden to be stored or transported together. (''X'' in the table).	6,000
	—Failure to obey segregation requirements for materials that must be separated to prevent commingling in the event of a leak. (''O'' in the table).	4,000
174.83(a)	Improper switching of placarded rail cars	5,000
174.83(b)	Improper switching of loaded rail car containing Division 1.1/1.2, 2.3 PG I Zone A, or Division 6.1 PG I Zone A, or DOT 113 tank car placarded for 2.1.	8,000

49 CFR section	Description	Guideline
174.83(c)–(e)	Improper switching of placarded flatcar	5,000
174.83(f)	Switching Division 1.1/1.2 without a buffer car or placement of Division 1.1/1.2 car under a bridge or alongside a passenger train or platform.	8,000
174.84	Improper handling of Division 1.1/1.2, 2.3 PG I Zone A, 6.1 PG I Zone A in relation to guard or escort cars.	4,000
174.85	Improper Train Placement (The unit of violation under this section is the car. Where more than one placarded car is involved, e.g., if 2 placarded cars are too close to the engine, both are violations. Where both have a similar violation, e.g., a Division 1.1 car next to a loaded tank car of a Class 3 material, each car gets the appropriate penalty as listed below.)	
	RESIDUE car without at least 1 buffer from engine or occupied caboose	3,000
	Placard Group 1—Division 1.1/1.2 (Class A explosive) materials	
	—Fewer than 6 cars (where train length permits) from engine or occupied caboose.	8,000
	—As above but with at least 1 buffer	7,000
	—No buffer at all (where train length doesn't permit 5)	8,000
	—Next to open top car with lading beyond car ends or, if shifted, would be beyond car ends.	7,000
	—Next to loaded flat car, except closed TOFC/COFC equipment, auto carriers, specially equipped car with tie-down devices, or car with permanent bulkhead.	6,000
	—Next to operating temperature-control equipment or internal combustion engine in operation.	7,000
	—Next to placarded car, except one from same placard group or COMBUSTIBLE.	7,000
	Placard Group 2—Division 1.3/1.4/1.5 (Class B and C explosives); Class 2 (compressed gas, other than Division 2.3, PG 1 Zone A; Class 3 (flammable liquids); Class 4 (flammable solid); Class 5 (oxidizing materials); Class 6, (poisonous liquids), except 6.1 PG 1 Zone A; Class 8 (corrosive materials).	
	For tank cars:	
	—Fewer than 6 cars (where train length permits) from engine or occupied caboose.	6,000
	—As above but with at least 1 buffer	5,000
	No buffer at all (where train length doesn't permit 5)	6,000
	—Next to open top car with lading beyond car ends or, if shifted, would be beyond car ends.	5,000
	—Next to loaded flat car, except closed TOFC/COFC equipment, auto carriers, specially equipped car with tie-down devices, or car with permanent bulkhead.	4,000
	—Next to operating temperature-control equipment or internal combustion engine in operation.	5,000
	—Next to placarded car, except one from same placard group or COMBUSTIBLE.	5,000
	For other rail cars:	
	—Next to placarded car, except one from same placard group or COMBUSTIBLE.	5,000
	Placard Group 3—Divisions 2.3 (PG 1 Zone A; poisonous gases) and 6.1 (PG 1 Zone A; poisonous materials)	
	For tank cars:	
	—Fewer than 6 cars (where train length permits) from engine or occupied caboose.	8,000
	—As above but with at least 1 buffer	7,000
	No buffer at all (where train length doesn't permit 5)	8,000
	—Next to open top car with lading beyond car ends or, if shifted, would be beyond car ends.	7,000
	—Next to loaded flat car, except closed TOFC/COFC equipment, auto carriers, specially equipped car with tie-down devices, or car with permanent bulkhead.	6,000
	—Next to operating temperature-control equipment or internal combustion engine in operation.	7,000
	—Next to placarded car, except one from same placard group or COMBUSTIBLE.	7,000
	For other rail cars:	
	—Next to placarded car, except one from same placard group or COMBUSTIBLE.	5,000
	Placard Group 4—Class 7 (radioactive) materials.	
	For rail cars:	
	—Next to locomotive or occupied caboose	8,000
	—Next to placarded car, except one from same placard group or COMBUSTIBLE.	5,000
	—Next to carload of undeveloped film	3,000
174.86	Exceeding maximum allowable operating speed (15 mph) while transporting molten metals or molten glass.	3,000

49 CFR section	Description	Guideline
174.101(o)(4)	Failure to have proper explosives placards on flatcar carrying trailers/containers placarded for Class 1. (Except for a complete failure to placard, the unit of violation is the placard.).	
	—Complete failure to placard	7,500
	—One placard missing (add $1,000 per missing placard up to a total of three, then use the guideline above).	1,000
174.104(f)	Failure to retain car certificates at ''forwarding station''	1,000
	Failure to attach car certificates to car. (Unit of violation is the certificate, 2 are required.).	1,000
174.204	Improper tank car delivery of gases (Class 2 materials)	3,000
174.304	Improper tank car delivery of flammable liquids (Class 3 materials)	3,000
174.600	Improper tank car delivery of materials extremely poisonous by inhalation (Division 2.3 Zone A or 6.1 Zone A materials).	5,000
PART 178		
178.2(b)	Package not constructed according to specifications—also cite section not complied with.	
	—Bulk packages, including portable tanks	8,000
	—55-gallon drum	2,500
	—Smaller package	1,000
PART 179		
179.1(e)	Tank car not constructed according to specifications— also cite section not complied with. (Note: Part 179 violations are against the builder or repairer. Sections in this Part are often cited in conjunction with violations of §§172.330 and 173.31 (a)&(b) by shippers. In such cases, the Part 179 sections are cited as references, not as separate alleged violations.).	8,000
179.6	Repair procedures not in compliance with Appendix R of the Tank Car Manual.	5,000

[1] See § 172.334.
[2] See § 172.516.
[3] Varies.
[4] See specific section.
[5] See penalties: 172.700–.704.

[61 FR 38647, July 25, 1996]

PART 210—RAILROAD NOISE EMISSION COMPLIANCE REGULATIONS

Subpart A—General Provisions

Sec.
210.1 Scope of part.
210.3 Applicability.
210.5 Definitions.
210.7 Responsibility for noise defective railroad equipment.
210.9 Movement of a noise defective locomotive, rail car, or consist of a locomotive and rail car.
210.11 Waivers.
210.13 Penalty.

Subpart B—Inspection and Testing

210.21 Scope of subpart.
210.23 Authorization.
210.25 Measurement criteria and procedures.
210.27 New locomotive certification.
210.29 Operation standards (moving locomotives and rail cars).
210.31 Operation standards (stationary locomotives at 30 meters).
210.33 Operation standards (switcher locomotives, load cell test stands, car coupling operations, and retarders).
APPENDIX A TO PART 210—SUMMARY OF NOISE STANDARDS, 40 CFR PART 201
APPENDIX B TO PART 210—SWITCHER LOCOMOTIVE ENFORCEMENT POLICY

AUTHORITY: Sec. 17, Pub. L. 92–574, 86 Stat. 1234 (42 U.S.C. 4916); sec. 1.49(o) of the regulations of the Office of the Secretary of Transportation, 49 CFR 1.49(o).

SOURCE: 48 FR 56758, Dec. 23, 1983, unless otherwise noted.

Subpart A—General Provisions

§ 210.1 Scope of part.

This part prescribes minimum compliance regulations for enforcement of the Railroad Noise Emission Standards established by the Environmental Protection Agency in 40 CFR part 201.

§210.3 Applicability.

(a) Except as provided in paragraph (b) of this section, the provisions of this part apply to the total sound emitted by moving rail cars and locomotives (including the sound produced by refrigeration and air conditioning units that are an integral element of such equipment), active retarders, switcher locomotives, car coupling operations, and load cell test stands, operated by a railroad as defined in 45 U.S.C. 22, under the conditions described in this part and in 40 CFR part 201.

(b) The provisions of this part do not apply to—

(1) Steam locomotives;

(2) Street, suburban, or interurban electric railways unless operated as a part of the general railroad system of transportation;

(3) Sound emitted by warning devices, such as horns, whistles, or bells when operated for the purpose of safety;

(4) Special purpose equipment that may be located on or operated from rail cars;

(5) As prescribed in 40 CFR 201.10, the provisions of 40 CFR 201.11 (a) and (b) and (c) do not apply to gas turbinepowered locomotives or any locomotive type that cannot be connected by any standard method to a load cell; or

(6) Inert retarders.

[48 FR 56758, Dec. 23, 1983, as amended at 54 FR 33228, Aug. 14, 1989]

§210.5 Definitions.

(a) *Statutory definitions.* All terms used in this part and defined in the Noise Control Act of 1972 (42 U.S.C. 4901 *et seq.*) have the definition set forth in that Act.

(b) *Definitions in standards.* All terms used in this part and defined in §201.1 of the Railroad Noise Emission Standards, 40 CFR 201.1, have the definition set forth in that section.

(c) *Additional definitions.* As used in this part—

Administrator means the Federal Railroad Administrator, the Deputy Administrator, or any official of FRA to whom the Administrator has delegated authority to act in the Administrator's stead.

Consist of a locomotive and rail cars means one or more locomotives coupled to a rail car or rail cars.

FRA means the Federal Railroad Administration.

Inert retarder means a device or system for holding a classified cut of cars and preventing it from rolling out the bottom of a railyard.

Inspector means FRA inspectors or FRA specialists.

Noise defective means the condition in which railroad equipment is found to exceed the Railroad Noise Emission Standards, 40 CFR part 201.

Railroad equipment means rail cars, locomotives, active retarders, and load cell test stands.

Standards means the Railroad Noise Emission Standards, 40 CFR part 201. (See appendix A in this part for a listing.)

§210.7 Responsibility for noise defective railroad equipment.

Any railroad that uses railroad equipment that is noise defective or engages in a car coupling operating that results in excessive noise according to the criteria established in this part and in the Standards is responsible for compliance with this part. Subject to §210.9, such railroad shall—

(a) Correct the noise defect;

(b) Remove the noise defective railroad equipment from service; or

(c) Modify the car coupling procedure to bring it within the prescribed noise limits.

§210.9 Movement of a noise defective locomotive, rail car, or consist of a locomotive and rail cars.

A locomotive, rail car, or consist of a locomotive and rail cars that is noise defective may be moved no farther than the nearest forward facility where the noise defective conditions can be eliminated only after the locomotive, rail car, or consist of a locomotive and rail cars has been inspected and been determined to be safe to move.

§210.11 Waivers.

(a) Any person may petition the Administrator for a waiver of compliance with any requirement in this part. A

waiver of compliance with any requirement prescribed in the Standards may not be granted under this provision.

(b) Each petition for a waiver under this section must be filed in the manner and contain information required by 49 CFR part 211.

(c) If the Administrator finds that a waiver of compliance applied for under paragraph (a) of this section is in the public interest and is consistent with railroad noise abatement and safety, the Administrator may grant a waiver subject to any condition he deems necessary. Notice of each waiver granted, including a statement of the reasons therefor, will be published in the FEDERAL REGISTER.

§ 210.13 Penalty.

Any person who operates railroad equipment subject to the Standards in violation of any requirement of this part or of the Standards is liable to penalty as prescribed in section 11 of the Noise Control Act of 1972 (42 U.S.C. 4910), as amended.

Subpart B—Inspection and Testing

§ 210.21 Scope of subpart.

This subpart prescribes the compliance criteria concerning the requirements for inspection and testing of railroad equipment or operations covered by the Standards.

§ 210.23 Authorization.

(a) An inspector is authorized to perform any noise test prescribed in the Standards and in the procedures of this part at any time, at any appropriate location, and without prior notice to the railroad, for the purpose of determining whether railroad equipment is in compliance with the Standards.

(b)(1) An inspector is authorized to request that railroad equipment and appropriate railroad personnel be made available for a passby or stationary noise emission test, as prescribed in the Standards and in the procedures of this part, and to conduct such test, at a reasonable time and location, for the purpose of determining whether the railroad equipment is in compliance with the Standards.

(2) If the railroad has the capability to perform an appropriate noise emission test, as prescribed in the Standards and in the procedures of this part, an inspector is authorized to request that the railroad test railroad equipment. The railroad shall perform the appropriate test as soon as practicable.

(3) The request referred to in this paragraph will be in writing, will state the grounds upon which the inspector has reason to believe that the railroad equipment does not conform to the Standards, and will be presented to an appropriate operating official of the railroad.

(4) Testing or submission for testing is not required if the cause of the noise defect is readily apparent and the inspector verifies that it is corrected by the replacement of defective components or by instituting a normal maintenance or repair procedure.

(c)(1) An inspector is authorized to inspect or examine a locomotive, rail car, or consist of a locomotive and rail cars operated by a railroad, or to request that the railroad inspect or examine the locomotive, rail car, or consist of a locomotive and rail cars, whenever the inspector has reason to believe that it does not conform to the requirements of the Standards.

(2) An inspector may request that a railroad conduct an inspection or examination of a locomotive, rail car, or consist of a locomotive and rail cars on the basis of an excessive noise emission level measured by a passby test. If, after such inspection or examination, no mechanical condition that would result in a noise defect can be found and the inspector verifies that no such mechanical condition exists, the locomotive, rail car, or consist of a locomotive and rail cars may be continued in service.

(3) The requests referred to in this paragraph will be in writing, will state the grounds upon which the inspector has reason to believe that the locomotive, rail car, or consist of a locomotive and rail cars does not conform to the Standards, and will be presented to an appropriate operating official of the railroad.

(4) The inspection or examination referred to in this paragraph may be conducted only at recognized inspection points or scheduled stopping points.

§210.25 Measurement criteria and procedures.

The parameters and procedures for the measurement of the noise emission levels are prescribed in the Standards.

(a) Quantities measured are defined in §201.21 of the Standards.

(b) Requirements for measurement instrumentation are prescribed in §201.22 of the Standards. In addition, the following calibration procedures shall be used:

(1)(i) The sound level measurement system including the microphone shall be calibrated and appropriately adjusted at one or more nominal frequencies in the range from 250 through 1000 Hz at the beginning of each series of measurements, at intervals not exceeding 1 (one) hour during continual use, and immediately following a measurement indicating a violation.

(ii) The sound level measurement system shall be checked not less than once each year by its manufacturer, a representative of its manufacturer, or a person of equivalent special competence to verify that its accuracy meets the manufacturer's design criteria.

(2) An acoustical calibrator of the microphone coupler type designed for the sound level measurement system in use shall be used to calibrate the sound level measurement system in accordance with paragraph (b)(1)(i) of this section. The calibration must meet or exceed the accuracy requirements specified in section 5.4.1 of the American National Standard Institute Standards, ''Method for Measurement of Sound Pressure Levels,'' (ANSI S1.13–1971) for field method measurements.

(c) Acoustical environment, weather conditions, and background noise requirements are prescribed in §201.23 of the Standards. In addition, a measurement tolerance of 2 dB(A) for a given measurement will be allowed to take into account the effects of the factors listed below and the interpretations of these effects by enforcement personnel:

(1) The common practice of reporting field sound level measurements to the nearest whole decibel;

(2) Variations resulting from commercial instrument tolerances;

(3) Variations resulting from the topography of the noise measurement site;

(4) Variations resulting from atmospheric conditions such as wind, ambient temperature, and atmospheric pressure; and

(5) Variations resulting from reflected sound from small objects allowed within the test site.

§210.27 New locomotive certification.

(a) A railroad shall not operate a locomotive built after December 31, 1979, unless the locomotive has been certified to be in compliance with the Standards.

(b) The certification prescribed in this section shall be determined for each locomotive model, by either—

(1) Load cell testing in accordance with the criteria prescribed in the Standards; or

(2) Passby testing in accordance with the criteria prescribed in the Standards.

(c) If passby testing is used under paragraph (b)(2) of this section, it shall be conducted with the locomotive operating at maximum rated horsepower output.

(d) Each new locomotive certified under this section shall be identified by a permanent badge or tag attached in the cab of the locomotive near the location of the inspection Form F 6180.49. The badge or tag shall state:

(1) Whether a load cell or passby test was used;

(2) The date and location of the test; and

(3) The A-weighted sound level reading in decibels obtained during the passby test, or the readings obtained at idle throttle setting and maximum throttle setting during a load cell test.

§210.29 Operation standards (moving locomotives and rail cars).

The operation standards for the noise emission levels of moving locomotives, rail cars, or consists of locomotives and rail cars are prescribed in the Standards and duplicated in appendix A of this part.

(a) Measurements for compliance shall be made in compliance with the provisions of subpart C of the Standards and the following:

(1) Consists of locomotives containing at least one locomotive unit manufactured prior to December 31, 1979, shall be evaluated for compliance in accordance with §201.12(a) of the Standards, unless a locomotive within the consist is separated by at least 10 rail car lengths or 500 feet from other locomotives in the consist, in which case such separated locomotives may be evaluated for compliance according to their respective built dates.

(2) Consists of locomotives composed entirely of locomotive units manufactured after December 31, 1979, shall be evaluated for compliance in accordance with §201.12(b) of the Standards.

(3) If the inspector cannot establish the built dates of all locomotives in a consist of locomotives measured under moving conditions, evaluation for compliance shall be made in accordance with §201.12(a) of the Standards.

(b) Noise emission standards for rail cars operating under moving conditions are contained in §201.13 of the Standards and are stated in appendix A of this part. If speed measurement equipment used by the inspector at the time of the measurement is not operating within an accuracy of 5 miles per hour, evaluation for compliance shall be made in accordance with §201.13(2) of the Standards.

(c) Locomotives and rail cars tested pursuant to the procedures prescribed in this part and in the Standards shall be considered in noncompliance whenever the test measurement, minus the appropriate tolerance (§210.25), exceeds the noise emission levels prescribed in appendix A of this part.

§210.31 Operation standards (stationary locomotives at 30 meters).

(a) For stationary locomotives at load cells:

(1) Each noise emission test shall begin after the engine of the locomotive has attained the normal cooling water operating temperature as prescribed by the locomotive manufacturer.

(2) Noise emission testing in idle or maximum throttle setting shall start after a 40 second stabilization period in the throttle setting selected for the test.

(3) After the stabilization period as prescribed in paragraph (a)(2) of this section, the A-weighted sound level reading in decibels shall be observed for an additional 30-second period in the throttle setting selected for the test.

(4) The maximum A-weighted sound level reading in decibels that is observed during the 30-second period of time prescribed in paragraph (a)(3) of this section shall be used for test measurement purposes.

(b) The following data determined by any locomotive noise emission test conducted after December 31, 1976, shall be recorded in the ''Remarks'' section on the reverse side of Form F 6180.49:

(1) Location of test;

(2) Type of test;

(3) Date of test; and

(4) The A-weighted sound level reading in decibels obtained during the passby test, or the readings obtained at idle throttle setting and maximum throttle setting during a load cell test.

(c) Any locomotive subject to this part that is found not to be in compliance with the Standards as a result of a passby test shall be subjected to a load cell test or another passby test prior to return to service, except that no such retest shall be required if the cause of the noise defect is readily apparent and is corrected by the replacement of defective components or by a normal maintenance or repair procedure.

(d) The last entry recorded on Form F 6180.49 as required in paragraph (b) of this section shall be transcribed to a new Form FRA F 6180.49 when it is posted in the locomotive cab.

(e) Locomotives tested pursuant to the procedures prescribed in this part and in the Standards shall be considered in noncompliance wherever the test measurement, minus the appropriate tolerance (§210.25), exceeds the noise emission levels precribed in appendix A of this part.

§210.33 Operation standards (switcher locomotives, load cell test stands, car coupling operations, and retarders).

(a) Measurement on receiving property of the noise emission levels from

switcher locomotives, load cell test stands, car coupling operations, and retarders shall be performed in accordance with the requirements of 40 CFR part 201 and §210.25 of this part.

(b) These sources shall be considered in noncompliance whenever the test measurement, minus the appropriate tolerance (§210.25), exceeds the noise emission levels prescribed in appendix A of this part.

APPENDIX A TO PART 210—SUMMARY OF NOISE STANDARDS, 40 CFR PART 201

Paragraph and section	Noise source	Noise standard—A weighted sound level in dB	Noise measure [1]	Measurement location
	All Locomotives Manufactured on or Before 31 December 1979			
201.11(a)	Stationary, Idle Throttle Setting	73	L_{max} (slow)	30 m (100 ft)
201.11(a)	Stationary, All Other Throttle Settings	93	.....do	Do.
201.12(a)	Moving	96	L_{max} (fast)	Do.
	All Locomotives Manufactured After 31 December 1979			
201.11(b)	Stationary, Idle Throttle Setting	70	L_{max} (slow)	Do.
201.11(b)	Stationary, All Other Throttle Settings	87	.....do	Do.
201.12(b)	Moving	90	L_{max} (fast)	Do.
201.11(c) and 201.12(c).	*Additional Requirement for Switcher Locomotives Manufactured on or Before 31 December 1979 Operating in Yards Where Stationary Switcher and other Locomotive Noise Exceeds the Receiving Property Limit of.*	65	L_{90} (fast) [2]	Receiving property
201.11(c)	Stationary, Idle Throttle Setting	70	L_{max} (slow)	30 m (100 ft)
201.11(c)	Stationary, All Other Throttle Settings	87	.....do	Do.
201.12(c)	Moving	90	L_{max} (fast)	Do.
	Rail Cars			
201.13(1)	Moving at Speeds of 45 mph or Less	88	.....do	Do.
201.13(2)	Moving at Speeds Greater than 45 mph	93	.....do	Do.
	Other Yard Equipment and Facilities			
201.14	Retarders	83	$L_{adjavemax}$ (fast)	Receiving property
201.15	Car-Coupling Operations	92	.....do	Do.
201.16	*Locomotive Load Cell Test Stands, Where the Noise from Locomotive Load Cell Operations Exceeds the Receiving Property Limits of.*	65	L_{90} (fast) [2]	Do.
201.16(a)	Primary Standard	78	L_{max} (slow)	30 m (100 ft).
201.16(b)	Secondary Standard if 30-m Measurement Not Feasible.	65	L_{90} (fast)	Receiving property located more than 120 m from Load Cell.

[1] L_{max}=Maximum sound level; L_{90}=Statistical sound level exceeded 90% of the time; $L_{adjavemax}$=Adjusted average maximum sound level.
[2] L_{90} must be validated by determining that L_{10}–L_{99} is less than or equal to 4dB (A).

[48 FR 56758, Dec. 23, 1983; 49 FR 1521, Jan. 12, 1984]

APPENDIX B TO PART 210—SWITCHER LOCOMOTIVE ENFORCEMENT POLICY

The EPA standards require that the noise emissions from all switcher locomotives in a particular facility be less than prescribed levels measured at 30 meters, under all operating modes. This requirement is deemed to be met unless ''receiving property'' noise due to switcher locomotives exceeds 65 dB(A), when measured in accordance with subpart C of 40 CFR part 201. The 65 dB(A) receiving property standard is the ''trigger'' for requiring the 30-meter test of switcher locomotives.

The purpose underlying FRA's enforcement of the noise standards is to reduce the impact of rail operations noise on receiving properties. In some instances, measures other than the 30-meter test approach may more effectively reduce the noise levels at receiving properties; therefore, FRA enforcement efforts will focus on abatement procedures that will achieve a reduction of receiving property noise levels to less than 65 dB(A).

For example, a parked, idling locomotive, even if equipped with exhaust silencing that

meets the stationary locomotive standard (30-meter test), may cause the receiving property standard to be exceeded if located on trackage adjacent to the receiving property. In that case, application of the 30-meter test to other switcher locomotives at the facility may not serve to reduce the receiving property noise level. On the other hand, operational changes by the railroad could significantly reduce receiving property noise levels. In such case, FRA would consider retesting after abatement measures have been taken. If the receiving property noise level is below the trigger and the abatement action is adopted, FRA would not make a 30-meter test of the switcher locomotives at the facility.

PART 211—RULES OF PRACTICE

Subpart A—General

Sec.
211.1 General.
211.3 Participation by interested persons.
211.5 Regulatory docket.
211.7 Filing requirements.
211.9 Content of rulemaking and waiver petitions.

Subpart B—Rulemaking Procedures

211.11 Processing of petitions for rulemaking.
211.13 Initiation and completion of rulemaking proceedings.
211.15 Notice and participation.
211.17 Publication and contents of notices.
211.19 Petitions for extensions of time to comment.
211.21 Consideration of comments received.
211.23 Additional public proceedings.
211.25 Hearings.
211.27 Publication of adopted rules and withdrawal of notices.
211.29 Petitions for reconsideration of a final rule.
211.31 Proceedings on petitions for reconsideration of a final rule.

Subpart C—Waivers

211.41 Processing of petitions for waiver of safety rules.
211.43 Processing of other waiver petitions.

Subpart D—Emergency Orders

211.47 Review procedures.

Subpart E—Miscellaneous Safety-Related Proceedings and Inquiries

211.51 Tests.
211.53 Signal applications.
211.55 Special approvals.
211.57 Petitions for reconsideration.
211.59 Proceedings on petitions for reconsideration.
211.61 Informal safety inquiries.

Subpart F—Interim Procedures for the Review of Emergency Orders

211.71 General.
211.73 Presiding officer; powers.
211.75 Evidence.
211.77 Appeal to the Administrator.

AUTHORITY: Secs. 6, 9, Pub. L. 89–670, 80 Stat. 937, 944 (49 U.S.C. 1655, 1657); the statutes referred to in sec. 6(e) (1), (2), (3), (6) (A) of Pub. L. 89–670, 80 Stat. 939 (49 U.S.C. 1655); sec. 202 of Pub. L. 91–458, 84 Stat. 971 as amended by sec. 5(a) of Pub. L. 94–348 (45 U.S.C. 431); and 49 CFR 1.49, unless otherwise noted.

SOURCE: 41 FR 54181, Dec. 13, 1976, unless otherwise noted.

Subpart A—General

§ 211.1 General.

(a) This part prescribes rules of practice that apply to rulemaking and waiver proceedings, review of emergency orders issued under 45 U.S.C. 432, and miscellaneous safety-related proceedings and informal safety inquiries. The specific time limits for disposition of proceedings apply only to proceedings initiated after December 31, 1976, under the Federal Railroad Safety Act of 1970 (45 U.S.C. 421 *et seq.*). When warranted, FRA will extend these time limits in individual proceedings. However, each proceeding under the Federal Railroad Safety Act shall be disposed of within 12 months after the date it is initiated. A proceeding shall be deemed to be initiated and the time period for its disposition shall begin on the date a petition or application that complies with the requirements of this chapter is received by the person designated in § 211.7.

(b) As used in this part—

(1) *Administrator* means the Federal Railroad Administrator or the Deputy Administrator or the delegate of either of them.

(2) *Waiver* includes exemption.

(3) *Safety Act* means the Federal Railroad Safety Act of 1970, as amended (45 U.S.C. 421 *et seq.*).

(4) *Docket Clerk* means the Docket Clerk, Office of Chief Counsel, Federal Railroad Administration, Washington, DC 20590.

(5) *Railroad Safety Board* means the Railroad Safety Board, Office of Safety, Federal Railroad Administration, Washington, DC 20590.

(c) Records relating to proceedings and inquiries subject to this part are available for inspection as provided in part 7 of this title.

§211.3 Participation by interested persons.

Any person may participate in proceedings and inquiries subject to this part by submitting written information or views. The Administrator may also permit any person to participate in additional proceedings, such as informal appearances, conferences, or hearings at which a transcript or minutes are kept, to assure informed administrative action and protect the public interest.

§211.5 Regulatory docket.

(a) Except as provided in paragraph (b) of this section, records of the Federal Railroad Administration concerning each proceeding subject to this part are maintained in current docket form by the Docket Clerk. These records include rulemaking and waiver petitions, emergency orders, notices, comments received in response to notices, hearing transcripts, final rules, denials of rulemaking petitions, grants and denials of waiver and other petitions.

(b) Records pertaining to applications for special approval under §211.55, signal applications under parts 235 and 236 of this chapter and informal safety inquiries under §211.61, are maintained in a current docket form by the Secretary of the Railroad Safety Board.

(c) Any person may examine docketed material in the office where it is maintained. Copies of docketed material other than commercially prepared transcripts may be obtained upon payment of the fees prescribed in part 7 of this title.

§211.7 Filing requirements.

(a) Any person may petition the Administrator for issuance, amendment repeal or permanent or temporary waiver of any rule or regulation. In the case of a petition for waiver, it must be submitted at least 3 months before the proposed effective date, unless good cause is shown for not doing so.

(b) Except as provided in paragraph (c) of this section, all petitions, applications, comments submitted in response to a notice, and other material pertaining to proceedings subject to this part, shall be submitted in triplicate to the Docket Clerk. Each petition received shall be acknowledged in writing. The acknowledgement shall contain the FRA docket number assigned to the petition and state the date the petition was received. Within 60 days following receipt, FRA will advise the petitioner or applicant of any deficiencies in its petition or application.

(c) Applications for special approval under §211.55 and signal applications under parts 235 and 236 of this chapter, and protests or comments and all other material pertaining to them shall be submitted in triplicate to the Secretary of the Railroad Safety Board.

§211.9 Content of rulemaking and waiver petitions.

Each petition for rulemaking or waiver must:

(a) Set forth the text or substance of the rule, regulation, standard or amendment proposed, or specify the rule, regulation or standard that the petitioner seeks to have repealed or waived, as the case may be;

(b) Explain the interest of the petitioner, and the need for the action requested; in the case of a petition for waiver, explain the nature and extent of the relief sought, and identify and describe the persons, equipment, installations and locations to be covered by the waiver;

(c) Contain sufficient information to support the action sought including an evaluation of anticipated impacts of the action sought; each evaluation shall include an estimate of resulting costs to the private sector, to consumers, and to Federal, State and local governments as well as an evaluation of resulting benefits, quantified to the extent practicable. Each petition pertaining to safety regulations must also contain relevant safety data.

Subpart B—Rulemaking Procedures

§ 211.11 Processing of petitions for rulemaking.

(a) *General.* Each petition for rulemaking filed as prescribed in §§ 211.7 and 211.9 is referred to the head of the office responsible for the subject matter of the petition to review and recommend appropriate action to the Administrator. No public hearing or oral argument is held before the Administrator decides whether the petition should be granted. However, a notice may be published in the FEDERAL REGISTER inviting written comments concerning the petition. Each petition shall be granted or denied not later than six months after its receipt by the Docket Clerk.

(b) *Grants.* If the Administrator determines that a rulemaking petition complies with the requirements of § 211.9 and that rulemaking is justified, he initiates a rulemaking proceeding by publishing an advance notice or notice of proposed rulemaking in the FEDERAL REGISTER.

(c) *Denials.* If the Administrator determines that a rulemaking petition does not comply with the requirements of § 211.9 or that rulemaking is not justified, he denies the petition. If the petition pertains to railroad safety, the Administrator may also initiate an informal safety inquiry under § 211.61.

(d) *Notification; closing of docket.* Whenever the Administrator grants or denies a rulemaking petition, a notice of the grant or denial is mailed to the petitioner. If the petition is denied, the proceeding is terminated and the docket for that petition is closed.

§ 211.13 Initiation and completion of rulemaking proceedings.

The Administrator initiates all rulemaking proceedings on his own motion by publishing an advance notice of proposed rulemaking or a notice of proposed rulemaking in the FEDERAL REGISTER. However, he may consider the recommendations of interested persons or other agencies of the United States. A separate docket is established and maintained for each rulemaking proceeding. Each rulemaking proceeding shall be completed not later than 12 months after the initial notice in that proceeding is published in the FEDERAL REGISTER. However, if it was initiated as the result of the granting of a rulemaking petition, the rulemaking proceeding shall be completed not later than 12 months after the petition was filed as prescribed in §§ 211.7 and 211.9.

§ 211.15 Notice and participation.

(a) Except as provided in paragraph (c) of this section, or when the Administrator finds for good cause that notice is impractical, unnecessary, or contrary to the public interest (and incorporates the findings and a brief statement of the reasons therefore in the rules issued), an advance notice or notice of proposed rulemaking is published in the FEDERAL REGISTER and interested persons are invited to participate in the rulemaking proceedings with respect to each substantive rule.

(b) Unless the Administrator determines that notice and public rulemaking proceedings are necessary or desirable, interpretive rules, general statements of policy, and rules relating to organization, procedure, or practice, including those relating to agency management or personnel, are prescribed as final without notice or other public rulemaking proceedings.

(c) An advance notice or notice of proposed rulemaking is issued and interested persons are invited to participate in rulemaking proceedings with respect only to those procedural and substantive rules of general applicability relating to public property, loans, grants, benefits, or contracts which the Administrator has determined to be of substantial public interest.

§ 211.17 Publication and contents of notices.

Each advance notice or notice of proposed rulemaking is published in the FEDERAL REGISTER and includes—

(a) A statement of the time, place and nature of the proposed rulemaking proceeding;

(b) A reference to the authority under which it is issued;

(c) A description of the subjects or issues involved or the substance or terms of the proposed rule;

(d) A statement of the time within which written comments must be submitted and the required number of copies; and

(e) A statement of how and to what extent interested persons may participate in the proceeding.

§211.19 Petitions for extensions of time to comment.

(a) Any person may petition the Administrator for an extension of time to submit comments in response to an advance notice or notice of proposed rulemaking. The petition must be received by the Docket Clerk not later than 10 days before expiration of the time stated in the notice and must contain reference to the FRA docket number for the proceeding involved. The filing of the petition does not automatically extend the time for petitioner's comments.

(b) The Administrator grants the petition only if the petitioner shows a substantive interest in the proposed rule and good cause for the extension, and if time permits and the extension is in the public interest. Extensions will not be granted unless time permits and will not exceed one month. If an extension is granted, it is granted as to all persons and a notice of the extension is published in the FEDERAL REGISTER.

§211.21 Consideration of comments received.

All timely comments are considered before final action is taken on a rulemaking proposal. Late-filed comments will be considered so far as possible without incurring additional expense or delay.

§211.23 Additional public proceedings.

The Administrator may conduct other public proceedings that he finds necessary or desirable. For example, he may invite interested persons to present oral arguments, participate in conferences, or appear at informal hearings.

§211.25 Hearings.

(a) A hearing will be held if required by statute or the Administrator finds it necessary or desirable.

(b) Except for statutory hearings required to be on the record—

(1) Hearings are fact-finding proceedings, and there are no formal pleadings or adverse parties;

(2) Any rule issued in a proceeding in which a hearing is held is not based exclusively on the record of the hearing; and

(3) Hearings are conducted in accordance with section 553 of title 5, U.S.C.; section 556 and 557 of title 5 do not apply to hearings held under this part.

(c) The Administrator conducts or designates a representative to conduct any hearing held under this part. The Chief Counsel serves or designates a member of his staff to serve as legal officer at the hearing.

§211.27 Publication of adopted rules and withdrawal of notices.

Whenever the Administrator adopts a final rule or withdraws an advance notice or notice of proposed rulemaking, the final rule or a notice of withdrawal is published in the FEDERAL REGISTER.

§211.29 Petitions for reconsideration of a final rule.

(a) Any person may petition the Administrator for reconsideration of any rule issued under this part. Except for good cause shown, such a petition must be submitted not later than 60 days after publication of the rule in the FEDERAL REGISTER, or 10 days prior to the effective date of the rule, whichever is the earlier. The petition must contain a brief statement of the complaint and an explanation as to why compliance with the rule is not possible, is not practicable, is unreasonable, or is not in the public interest.

(b) If the petitioner requests consideration of additional facts, he must state the reason they were not presented to the Administrator within the allotted time.

(c) The Administrator does not consider repetitious petitions.

(d) Unless the Administrator specifically provides otherwise, and publishes notice thereof in the FEDERAL REGISTER, the filing of a petition under this section does not stay the effectiveness of a rule.

[41 FR 54181, Dec. 13, 1976, as amended at 42 FR 27593, May 31, 1977]

§ 211.31 Proceedings on petitions for reconsideration of a final rule.

(a) The Administrator may grant or deny, in whole or in part, any petition for reconsideration of a final rule without further proceedings. Each petition shall be decided not later than 4 months after its receipt by the Docket Clerk. In the event he determines to reconsider a rule, the Administrator may amend the rule or initiate a new rulemaking proceeding. An appropriate notice is published in the FEDERAL REGISTER.

(b) Whenever the Administrator determines that a petition should be granted or denied, a notice of the grant or denial of a petition for reconsideration is sent to the petitioner. When a petition is granted, a notice is published in the FEDERAL REGISTER.

(c) The Administrator may consolidate petitions relating to the same rule.

Subpart C—Waivers

§ 211.41 Processing of petitions for waiver of safety rules.

(a) *General.* Each petition for a permanent or temporary waiver of a safety rule, regulation or standard filed as prescribed in §§211.7 and 211.9, is referred to the Railroad Safety Board for decision and decided not later than 9 months after receipt.

(b) *Notice and hearing.* If required by statute or the Administrator or the Railroad Safety Board deems it desirable, a notice is published in the FEDERAL REGISTER, an opportunity for public comment is provided, and a hearing is held in accordance with §211.25, before the petition is granted or denied.

(c) *Grants.* If the Railroad Safety Board determines that the petition complies with the requirements of §211.9 and that a waiver is justified, it grants the petition. Conditions may be imposed on the grant of waiver if the Board concludes they are necessary to assure safety or are in the public interest.

(d) *Denials.* If the Railroad Safety Board determines that the petition does not comply with the requirements of §211.9 or that a waiver is not justified, it denies the petition.

(e) *Notification.* Whenever the Railroad Safety Board grants or denies a petition, a notice of that grant or denial is sent to the petitioner. When a petition has been decided, interested persons are also notified or a notice is published in the FEDERAL REGISTER.

(f) *Petition for reconsideration.* Any person may petition for reconsideration of the grant or denial of a waiver under procedures set forth in §211.57. Each petition shall be processed in accordance with §211.59.

§ 211.43 Processing of other waiver petitions.

(a) *General.* Except as provided in §211.41, each petition for a permanent or temporary waiver of a rule, regulation or standard shall be filed and processed as prescribed in §§211.7 and 211.9.

(b) *Notice and hearing.* If required by statute or the Administrator deems it desirable, a notice is published in the FEDERAL REGISTER, an opportunity for public comment is provided, and a hearing is held in accordance with §211.25, before the petition is granted or denied.

(c) *Grants.* If the Administrator determines that the petition complies with the requirements of §211.9 and that a waiver is justified, he grants the waiver. Conditions may be imposed on the grant of waiver if the Administrator concludes they are necessary to achieve the purposes of programs affected by the grant of waiver or are otherwise in the public interest.

(d) *Denials.* If the Administrator determines that the petition does not comply with the requirements of §211.9 or that a waiver is not justified, he denies the waiver.

(e) *Notification.* Whenever the Administrator grants or denies a petition, a notice of the grant or denial is sent to the petitioner. When a petition has been decided, interested persons are also notified or a notice is published in the FEDERAL REGISTER.

(f) *Petitions for reconsideration.* Any person may petition for reconsideration of the grant or denial of a waiver under procedures set forth in §211.57. Each petition shall be processed in accordance with §211.59.

Subpart D—Emergency Orders

§211.47 Review procedures.

(a) As specified in section 203, Public Law 91–458, 84 Stat. 972 (45 U.S.C. 432), opportunity for review of Emergency orders issued under that section will be provided in accordance with section 554 of title 5 of the U.S.C.. Petitions for such review must be submitted in writing to the Office of Chief Counsel, Federal Railroad Administration, Washington, DC 20590. Upon receipt of a petition, FRA will immediately contact the petitioner and make the necessary arrangements for a conference to be held at the earliest date acceptable to the petitioner. At this conference, the petitioner will be afforded an opportunity to submit facts, arguments and proposals for modification or withdrawal of the Emergency order. If the controversy is not resolved at the conference and a hearing is desired, the petitioner must submit a written request for a hearing within 15 days after the conference. The hearing will commence within 14 calendar days of receipt of the request and will be conducted in accordance with sections 556 and 575, title 5, U.S.C. Each petition for review shall be decided not later than 3 months after receipt.

(b) Unless stayed or modified by the Administrator, the requirements of each Emergency order shall remain in effect and be observed pending decision on a petition for review.

Subpart E—Miscellaneous Safety-Related Proceedings and Inquiries

§211.51 Tests.

(a) Pursuant to the Department of Transportation Act (80 Stat. 931, 49 U.S.C. 1651 *et seq.*), the Federal Railroad Safety Act of 1970 (84 Stat. 971, 45 U.S.C. 421, 431–441), or both, the Administrator may temporarily suspend compliance with a substantive rule of the Federal Railroad Administration, if:

(1) The suspension is necessary to the conduct of a Federal Railroad Administration approved test program designed to evaluate the effectiveness of new technology or operational approaches or instituted in furtherance of a present or proposed rulemaking proceeding;

(2) The suspension is limited in scope and application to such relief as may be necessary to facilitate the conduct of the test program; and

(3) The suspension is conditioned on the observance of standards sufficient to assure safety.

(b) When required by statute, a notice is published in the FEDERAL REGISTER, an opportunity is provided for public comment, and a hearing is held in accordance with §211.25, before the FRA approved test program is implemented.

(c) When the Administrator approves suspension of compliance with any rule in connection with a test program, a description of the test program containing an explanatory statement responsive to paragraph (a) of this section is published in the FEDERAL REGISTER.

§211.53 Signal applications.

Applications for approval of discontinuance or material modification of a signal system authorized by part 235 or waiver of a requirement of part 236 of this chapter must be submitted in triplicate to the Secretary, Railroad Safety Board, handled in accordance with procedures set forth in part 235 or 236, respectively, and decided not later than 9 months after receipt. When a decision is issued, the applicant and other interested parties are notified or a notice is published in the FEDERAL REGISTER.

§211.55 Special approvals.

Requests for special approval pertaining to safety not otherwise provided for in this chapter, must be submitted in triplicate to the Secretary, Railroad Safety Board; specifying the action requested. These requests shall be considered by the Board and appropriate action shall be taken not later than 9 months after receipt. When a decision is issued, the requestor and other interested parties are notified or a notice is published in the FEDERAL REGISTER.

§211.57 Petitions for reconsideration.

(a) Any person may petition the Administrator for reconsideration of final

action taken in proceedings subject to subpart C or E of this part.

(b) The petition must specify with particularity the grounds for modification or revocation of the action in question.

(c) The Administrator does not consider repetitious petitions.

(d) Unless the Administrator specifically provides otherwise, and gives notice to interested parties or publishes notice in the FEDERAL REGISTER, the filing of a petition under this section does not stay the effectiveness of the action sought to be reconsidered.

§ 211.59 Proceedings on petitions for reconsideration.

(a) The Administrator may invite public comment or seek a response from the party at whose request the final action was taken before deciding a petition for reconsideration submitted under § 211.57.

(b) The Administrator may reaffirm, modify, or revoke the final action without further proceedings and shall issue notification of his decision to the petitioner and other interested parties or publish a notice in the FEDERAL REGISTER. Each petition for reconsideration shall be decided not later than 4 months after receipt. Petitions for reconsideration relating to the same rule may be consolidated for decision. In the event the Administrator determines to reconsider a final action, and appropriate notice is published in the FEDERAL REGISTER.

§ 211.61 Informal safety inquiries.

The Administrator may conduct informal safety inquiries to collect information on selected topics relating to railroad safety. A notice of each such inquiry will be published in the FEDERAL REGISTER outlining the area of inquiry and inviting interested persons to assist by submitting written material or participating in informal public conferences and discussions. Upon completion of the inquiry, the Administrator will review the information obtained and may, on his own motion, initiate a rulemaking proceeding under § 211.13 or take whatever other action he deems appropriate.

Subpart F—Interim Procedures for the Review of Emergency Orders

AUTHORITY: Secs. 203 and 208(a), 84 Stat. 972, 974–975 (45 U.S.C. 432, 437(a)) and 5 U.S.C. 554–559.

SOURCE: 44 FR 13029, Mar. 9, 1979, unless otherwise noted.

§ 211.71 General.

(a) This subpart consists of interim procedures for the review of emergency orders issued under section 203 of the Federal Railroad Safety Act of 1970, supplementing § 211.47 of this part.

(b) Proceedings under this subpart are subject to the requirements of 5 U.S.C. 554–559.

(c) Notwithstanding § 211.1 of this part, as used in this subpart *Administrator* means the Federal Railroad Administrator or Deputy Administrator.

§ 211.73 Presiding officer; powers.

(a) An administrative hearing for the review of an emergency order is presided over by the Administrator or by an administrative law judge designated at the request of FRA pursuant to 5 CFR 930.213.

(b) The presiding officer may exercise the powers of the FRA to regulate the conduct of the hearing and associated proceedings for the purpose of achieving a prompt and fair determination of all material issues in controversy.

(c) The final decision of the presiding officer shall set forth findings and conclusions based on the administrative record. That decision may set aside, modify or affirm the requirements of the emergency order under review.

(d) Except as provided in § 211.77, the decision of the presiding officer is administratively final.

§ 211.75 Evidence.

(a) The Federal Rules of Evidence for United States Courts and Magistrates shall be employed as general guidelines for the introduction of evidence in proceedings under this subpart. However, except as provided in paragraph (b) of this section, all relevant and probative evidence offered by a party shall be received in evidence.

(b) The presiding officer may deny the admission of evidence which is determined to be—

(1) Unduly repetitive; or

(2) So extensive and lacking in relevance or probative effect that its admission would impair the prompt, orderly, and fair resolution of the proceeding.

§211.77 Appeal to the Administrator.

(a) Any party aggrieved by the final decision of a presiding officer (other than the Administrator) may appeal to the Administrator. The appeal must be filed within twenty (20) days from issuance of the presiding officer's decision and must set forth the specific exceptions of the party to the decision, making reference to the portions of the administrative record which are believed to support the exceptions. The notice of appeal and any supporting papers shall be accompanied by a certificate stating that they have been served on all parties to the proceeding.

(b) [Reserved]

PART 212—STATE SAFETY PARTICIPATION REGULATIONS

Subpart A—General

Sec.
212.1 Purpose and scope.
212.3 Definitions.
212.5 Filing.

Subpart B—State/Federal Roles

212.101 Program principles.
212.103 Investigative and surveillance authority.
212.105 Agreements.
212.107 Certification.
212.109 Joint planning of inspections.
212.111 Monitoring and other inspections.
212.113 Program termination.
212.115 Enforcement actions.

Subpart C—State Inspection Personnel

212.201 General qualifications of State inspection personnel.
212.203 Track inspector.
212.205 Apprentice track inspector.
212.207 Signal and train control inspector.
212.209 Train control inspector.
212.211 Apprentice signal and train control inspector.
212.213 Motive power and equipment (MP&E) inspector.
212.215 Locomotive inspector.
212.217 Car inspector.
212.219 Apprentice MP&E inspector.
212.221 Operating practices inspector.
212.223 Operating practices compliance inspector.
212.225 Apprentice operating practices inspector.
212.227 Hazardous materials inspector.
212.229 Apprentice hazardous materials inspector.
212.231 Highway-rail grade crossing inspector.
212.233 Apprentice highway-rail grade crossing inspector.
212.235 Inapplicable qualification requirements.

AUTHORITY: 49 U.S.C. 20103, 20106, 20105, and 20113 (formerly secs. 202, 205, 206, and 208, of the Federal Railroad Safety Act of 1970, as amended (45 U.S.C. 431, 434, 435, and 436)); and 49 CFR 1.49.

SOURCE: 47 FR 41051, Sept. 16, 1982, unless otherwise noted.

Subpart A—General

§212.1 Purpose and scope.

This part establishes standards and procedures for State participation in investigative and surveillance activities under the Federal railroad safety laws and regulations.

§212.3 Definitions.

As used in this part:

(a) *Administrator* means the Federal Railroad Administrator or the Deputy Administrator or the delegate of either of them.

(b) *Associate Administrator* means the Associate Administrator for Safety, Federal Railroad Administration (FRA), or the Deputy Associate Administrator for Safety, FRA.

(c) *FRA* means the Federal Railroad Administration.

(d) *Federal railroad safety laws* means the following enactments, together with regulations and orders issued under their authority:

(1) The Federal Railroad Safety Act of 1970, as amended (45 U.S.C. 421, 431–441);

(2) The Safety Appliance Acts, as amended (45 U.S.C. 1–16);

(3) The Locomotive Inspection Act, as amended (45 U.S.C. 22–34);

(4) The Signal Inspection Act, as amended (49 U.S.C. 26);

(5) The Accident Reports Act, as amended (45 U.S.C. 38–42);

(6) The Hours of Service Act, as amended (45 U.S.C. 61–64(b); and

(7) The Hazardous Materials Transportation Act (49 app. U.S.C. 1801 *et seq.*), as it pertains to shipment or transportation by railroad.

(e) *Manufacturer* means a person that manufactures, fabricates, marks, maintains, reconditions, repairs, or tests containers which are represented, marked, certified, or sold for use in the bulk transportation of hazardous materials by railroad.

(f) *Shipper* means a person that offers a hazardous material for transportation or otherwise causes it to be transported.

(g) *Planned compliance inspections* means investigative and surveillance activities described in the annual work plan required by § 212.109 of this part that provide basic surveillance of railroad facilities, equipment and/or operations for the purpose of determining the level of compliance with relevant Federal safety requirements.

[47 FR 41051, Sept. 16, 1982, as amended at 57 FR 28115, June 24, 1992]

§ 212.5 Filing.

Each State agency desiring to conduct investigative and surveillance activities must submit to the Associate Administrator for Safety, Federal Railroad Administration, 400 Seventh Street, SW., Washington, DC 20590, the documentation which contains the information prescribed by §§ 212.105 and 212.107.

Subpart B—State/Federal Roles

§ 212.101 Program principles.

(a) The purpose of the national railroad safety program is to promote safety in all areas of railroad operations in order to reduce deaths, injuries and damage to property resulting from railroad accidents.

(b)(1) The national railroad safety program is carried out in part through the issuance of mandatory Federal safety requirements and through inspection efforts designed to monitor compliance with those requirements. FRA and State inspections determine the extent to which the railroads, shippers, and manufacturers have fulfilled their obligations with respect to inspection, maintenance, training, and supervision. The FRA and participating States do not conduct inspections of track, equipment, signal systems, operating practices, and hazardous materials handling for the railroads, shippers, and manufacturers.

(2) The national railroad safety program is also carried out through routine inspections, accident investigations, formal and informal educational efforts, complaint investigations, safety assessments, special inquiries, regulatory development, research and similar initiatives.

(c) It is the policy of the FRA to maintain direct oversight of railroad, shipper, and manufacturer conditions and practices relevant to safety by conducting inspections and investigations in concert with participating State agencies.

(d) The principal role of the State Safety Participation Program in the national railroad safety effort is to provide an enhanced investigative and surveillance capability through assumption, by participating State agencies, of responsibility for planned routine compliance inspections. The FRA encourages further State contributions to the national railroad safety program consistent with overall program needs, individual State capabilities, and the willingness of the States to undertake additional investigative and surveillance activities.

(e) It is the policy of the FRA to promote the growth and vitality of the State Safety Participation Program through liaison with State government, coordination of Federal and State investigative and surveillance activities, and training of inspection personnel.

[47 FR 41051, Sept. 16, 1982, as amended at 57 FR 28115, June 24, 1992]

§ 212.103 Investigative and surveillance authority.

(a) Subject to the requirements of this part, a State agency with jurisdiction under State law may participate in investigative and surveillance activities concerning Federal railroad safety laws and regulations by entering into an agreement under § 212.105 for the exercise of specified authority.

(b) Subject to requirements of this part, a State agency with jurisdiction under State law may participate in investigative and surveillance activities with respect to particular rules, regulations, orders or standards issued under the regulatory authority of the Federal Railroad Safety Act of 1970 by filing an annual certification under § 212.107.

§ 212.105 Agreements.

(a) *Scope.* The principal method by which States may participate in investigative and surveillance activities is by agreement with FRA. An agreement may delegate investigative and surveillance authority with respect to all or any part of the Federal railroad safety laws.

(b) *Duration.* An agreement may be for a fixed term or for an indefinite duration.

(c) *Amendments.* An agreement may be amended to expand or contract its scope by consent of FRA and the State.

(d) *Common terms.* Each agreement entered into under this section provides that:

(1) The State agency is delegated certain specified authority with respect to investigative and surveillance activities;

(2) The delgation is effective only to the extent it is carried out through personnel recognized by the State and the FRA (pursuant to subpart C of this part) to be qualified to perform the particular investigative and surveillance activities to which the personnel are assigned; and

(3) The State agency agrees to provide the capability necessary to assure coverage of facilities, equipment, and operating practices through planned routine compliance inspections for all, or a specified part of, the territory of the State.

(e) *Request for agreement.* A request for agreement shall contain the following information:

(1) An opinion of the counsel for the State agency stating that:

(i) The agency has jurisdiction over the safety practices of the facilities, equipment, rolling stock, and operations of railroads in that State and whether the agency has jurisdiction over shippers and manufacturers;

(ii) The agency has the authority and capability to conduct investigative and surveillance activities in connection with the rules, regulations, orders, and standards issued by the Administrator under the Federal railroad safety laws; and

(iii) State funds may be used for this purpose.

(2) A statement that the State agency has been furnished a copy of each Federal safety statute, rule, regulation, order, or standard pertinent to the State's participation;

(3) The names of the railroads operating in the State together with the number of miles of main and branch lines operated by each railroad in the State;

(4) The name, title and telephone number of the person designated by the agency to coordinate the program; and

(5) A description of the organization, programs, and functions of the agency with respect to railroad safety.

(f) *Developmental agreement.* Consistent with national program requirements, the Associate Administrator may enter into an agreement under this section prior to the qualification of inspection personnel of the State under subpart C of this part. In such a case, the agreement shall (1) specify the date at which the State will assume investigative and surveillance duties, and (2) refer to any undertaking by the FRA to provide training for State inspection personnel, including a schedule for the training courses that will be made available.

(g) *Action on request.* The Associate Administrator responds to a request for agreement by entering into an agreement based on the request, by declining the request, or by suggesting modifications.

(Approved by the Office of Management and Budget under control number 2130–0509)

[47 FR 41051, Sept. 16, 1982, as amended at 57 FR 28115, June 24, 1992]

§ 212.107 Certification.

(a) *Scope.* In the event the FRA and the State agency do not agree on terms for the participation of the State under § 212.105 of this part and the State wishes to engage in investigative and surveillance activities with respect to any

rule, regulation, order, or standard issued under the authority of the Federal Railroad Safety Act of 1970, the State shall file an annual certification with respect to such activities.

(b) *Content.* The annual certification shall be filed not less than 60 days before the beginning of the Federal fiscal year to which it applies, shall contain the information required by § 212.105(e) of this part and, in addition, shall certify that:

(1) The State agency has the authority and capability to conduct investigative and surveillance activities under the requirements of this part with respect to each rule, regulation, order or standard for which certification is submitted; and

(2) The State agency will, at a minimum, conduct planned compliance inspections meeting the level of effort prescribed in the applicable appendix to this part.

(c) *Action on certification.* The Associate Administrator responds to the filing of an annual certification within 60 days of its receipt by accepting it or by rejecting it for cause stated.

(d) *Delegation of authority.* Acceptance of an annual certification constitutes a delegation of authority to conduct investigative and surveillance activities only to the extent that the delegation is carried out through personnel recognized by the State and the FRA (pursuant to subpart C of this part) to be qualified to perform the particular investigative and surveillance activities to which the personnel are assigned.

(Approved by the Office of Management and Budget under control number 2130–0509)

§ 212.109 Joint planning of inspections.

Prior to the beginning of each calendar year, each participating State applying for grant assistance under subpart D of this part shall develop, in conjunction with the FRA Regional Director of the region in which the State is located, an annual work plan for the conduct of investigative and surveillance activities by the State agency. The plan shall include a program of inspections designed to monitor the compliance of the railroads, shippers, and manufacturers operating within the State (or portion thereof) with applicable Federal railroad safety laws and regulations. In the event the participating State and the FRA Regional Director cannot agree on an annual work plan, the Associate Administrator for Safety shall review the matter.

(Approved by the Office of Management and Budget under control number 2130–0509)

[57 FR 28115, June 24, 1992]

§ 212.111 Monitoring and other inspections.

(a) It is the policy of the FRA to monitor State investigative and surveillance practices at the program level.

(b) It is the policy of the FRA to coordinate its direct inspection and investigative functions in participating States with the responsible State agency, providing prior advice to the States whenever practicable.

(c) The FRA may conduct such monitoring of State investigative and surveillance practices and such other inspection and investigation as may be necessary to aid in the enforcement of the Federal railroad safety laws.

§ 212.113 Program termination.

(a) A State agency participating in investigative and surveillance activities by agreement or certification shall provide thirty (30) days notice of its intent to terminate its participation.

(b) The Administrator may, on his own initiative, terminate the participation of a State agency if, after at least thirty (30) days notice an opportunity for oral hearing under section 553 of title 5 U.S.C., the State agency does not establish that it has complied and is complying with:

(1) The requirements of this part;

(2) Relevant directives, enforcement manuals, and written interpretations of law and regulations provided by the FRA for guidance of the program; and

(3) The rule of national uniformity of laws, rules, regulations, orders, and standards relating to railroad safety as expressed in section 205 of the Federal Railroad Safety Act of 1970 (45 U.S.C. 434).

§ 212.115 Enforcement actions.

(a) Except as provided in paragraph (b) of this section, the FRA reserves exclusive authority to assess and compromise penalties, to issue emergency orders and compliance orders, institute or cause to be instituted actions for collection of civil penalties or for injunctive relief, and to commence any and all other enforcement actions under the Federal railroad safety laws.

(b)(1) Section 207(a) of the Federal Railroad Safety Act of 1970, as amended (45 U.S.C. 436(a)), authorizes a participating State to bring an action for assessment and collection of a civil penalty in a Federal district court of proper venue, if the FRA has not acted on a request for civil penalty assessment originated by the State, within sixty (60) days of receipt, by assessing the penalty or by determining in writing that no violation occurred.

(2) Section 207(b) of the Federal Railroad Safety Act of 1970, as amended (45 U.S.C. 436(b)), authorizes a participating State to bring an action for injunctive relief in a Federal district court of proper venue, if the FRA has not acted on a request to initiate such an action within fifteen (15) days of receipt, by referring the matter to the Attorney General for litigation, by undertaking other enforcement action, or by determining in writing that no violation has occurred.

(3) For purposes of this paragraph, a request for legal action is deemed to be received when a legally sufficient investigative report specifying the action requested is received by the designated FRA offices.

(c)(1) Requests for civil penalty assessments and other administrative actions shall be submitted to the FRA Regional Director for Railroad Safety for the FRA region in which the State is located.

(2) Requests for the institution of injunctive actions shall be submitted simultaneously to (i) the FRA Regional Director for Railroad Safety for the FRA region in which the State is located and (ii) the Enforcement Division, Office of Chief Counsel, FRA, Washington, DC 20590.

Subpart C—State Inspection Personnel

§ 212.201 General qualifications of State inspection personnel.

(a) This subpart prescribes the minimum qualification requirements for State railroad safety inspectors, compliance inspectors and inspector apprentices. A State agency may establish more stringent or additional requirements for its employees.

(b) An inspector, compliance inspector, or apprentice inspector shall be recognized as qualified under this part by the State agency and the Associate Administrator prior to assuming the responsibilities of the position.

(c) Each inspector, compliance inspectors and apprentice inspector shall be a bona fide employee of the State agency.

(d) Each inspector, compliance inspector, and apprentice inspector shall demonstrate:

(1) The ability to read and comprehend written materials such as training and enforcement manuals, regulations, operating and safety rules of the railroad, and similar materials;

(2) The ability to compose narrative reports of investigative findings that are clear, complete, and grammatically acceptable;

(3) The ability to record data on standard report forms with a high degree of accuracy;

(4) The ability to communicate orally; and

(5) Basic knowledge of rail transportation functions, the organization of railroad, shipper, and manufacturer companies, and standard industry rules for personal safety.

(e) Each inspector shall demonstrate a thorough knowledge of:

(1) Railroad rules, practices, record systems, and terminology common to operating and maintenance functions; and

(2) The scope and major requirements of all of the Federal railroad safety laws and regulations.

(f) In addition to meeting the requirements of this section, each inspector and apprentice inspector shall meet

the applicable requirements of §§ 212.203 through 212.229 of this subpart.

[47 FR 41051, Sept. 16, 1982, as amended at 57 FR 28115, June 24, 1992]

§ 212.203 Track inspector.

(a) The track inspector is required, at a minimum, to be able to conduct independent inspections of track structures for the purpose of determining compliance with the Track Safety Standards (49 CFR part 213), to make reports of those inspections, and to recommend the institution of enforcement actions when appropriate to promote compliance.

(b) The track inspector is required, at a minimum to have at least four years of recent experience in track construction or maintenance. A bachelor's degree in engineering or a related technical specialization may be substituted for two of the four years of this experience requirement and successful completion of the apprentice training program may be substituted for the four years of this experience requirement.

(c) The track inspector shall demonstrate the following specific qualifications:

(1) A comprehensive knowledge of track nomenclature, track inspection techniques, track maintenance methods, and track equipment;

(2) The ability to understand and detect deviations from:

(i) Track maintenance standards accepted in the industry; and

(ii) The Track Safety Standards (49 CFR part 213).

(3) Knowledge of operating practices and vehicle/track interaction sufficient to understand the safety significance of deviations and combinations of deviations; and

(4) Specialized knowledge of the requirements of the Track Safety Standards, including the remedial action required to bring defective track into compliance with the standards.

§ 212.205 Apprentice track inspector.

(a) The apprentice track inspector must be enrolled in a program of training prescribed by the Associate Administrator leading to qualification as a track inspector. The apprentice track inspector may not participate in investigative and surveillance activities, except as an assistant to a qualified State or FRA inspector while accompanying that qualified inspector.

(b) An apprentice track inspector shall demonstrate basic knowledge of track inspection techniques, track maintenance methods, and track equipment prior to being enrolled in the program.

§ 212.207 Signal and train control inspector.

(a) The signal and train control inspector is required, at a minimum, to be able to conduct independent inspections of all types of signal and train control systems for the purpose of determining compliance with the Rules, Standards and Instructions for Railroad Signal Systems (49 CFR part 236), to make reports of those inspections, and to recommend the institution of enforcement actions when appropriate to promote compliance.

(b) The signal and train inspector is required, at a minimum, to have at least four years of recent experience in signal construction or maintenance. A bachelor's degree in electrical engineering or a related technical specialization may be substituted for two of the four years of this experience requirement and successful completion of the apprentice training program may be substituted for the four years of this requirement.

(c) The signal and train control inspector shall demonstrate the following specific qualifications:

(1) A comprehensive knowledge of signal and train control systems, maintenance practices, test and inspection techniques;

(2) The ability to understand and detect deviations from:

(i) Signal and train control maintenance standards accepted in the industry; and

(ii) The Rules, Standards and Instructions for Railroad Signal Systems (49 CFR part 236).

(3) The ability to examine plans and records, to make inspections of signal train control systems and to determine adequacy of stopping distances from prescribed speeds;

(4) Knowledge of operating practices and signal systems sufficient to understand the safety significance of deviations and combination of deviations; and

(5) Specialized knowledge of the requirements of the Rules, Standards and Instructions for Railroad Signal Systems, including the remedial action required to bring signal and train control systems into compliance with the standards.

§ 212.209 Train control inspector.

(a) The train control inspector is required, at a minimum, to be able to conduct independent inspections of automatic cab signal, automatic train stop, and automatic train control devices on board locomotives for the purpose of determining compliance with subpart E of the Rules, Standards and Instructions for Railroad Signal Systems (49 CFR part 236) and to recommend the institution of enforcement action when appropriate to promote compliance.

(b) The train control inspector is required, at a minimum, to have at least four years of recent experience in locomotive construction or maintenance. A bachelor's degree in electrical engineering or a related technical specialization may be substituted for two of the four years of this experience requirement and successful completion of the apprentice training program may be substituted for the four year experience requirement.

(c) The train control inspector shall demonstrate the following specific qualifications:

(1) A comprehensive knowledge of the various train control systems used on board locomotives, locomotive air brake systems and test and inspection procedures;

(2) The ability to understand and detect deviations from:

(i) Train control maintenance standards accepted in the industry; and

(ii) Subpart E of the Rules, Standards and Instructions for Railroad Signal Systems (49 CFR part 236);

(3) Knowledge of operating practices and train control systems sufficient to understand the safety significance of deviations and combinations of deviations; and

(4) Specialized knowledge of the requirements of subpart E of the Rules, Standards and Instructions for Railroad Signal Systems, including the remedial action required to bring train control systems used on board locomotives into compliance with the standards.

§ 212.211 Apprentice signal and train control inspector.

(a) The apprentice signal and train control inspector must be enrolled in a program of training prescribed by the Associate Administrator leading to qualification as a signal and train control inspector. The apprentice inspector may not participate in the investigative and surveillance activities, except as an assistant to a qualified State or FRA inspector while accompanying that qualified inspector.

(b) Prior to being enrolled in the program the apprentice inspector shall demonstrate:

(1) Working knowledge of basic electricity and the ability to use electrical test equipment in direct current and alternating current circuits; and

(2) A basic knowledge of signal and train control inspection and maintenance methods and procedures.

§ 212.213 Motive power and equipment (MP&E) inspector.

(a) The MP&E inspector is required, at a minimum, to be able to conduct independent inspections of railroad equipment for the purpose of determining compliance with all sections of the Freight Car Safety Standards (49 CFR part 215), Safety Glazing Standards (49 CFR part 223), Locomotive Safety Standards (49 CFR part 229), Safety Appliance Standards (49 CFR part 231), and Power Brake Standards (49 CFR part 232), to make reports of those inspections and to recommend the institution of enforcement actions when appropriate to promote compliance.

(b) The MP&E inspector is required, at a minimum, to have at least four years of recent experience in the construction or maintenance of railroad rolling equipment. A bachelor's degree in engineering or a related technical specialization may be substituted for two of the four years of this experience requirement and successful completion

of the apprentice training program may be substituted for the four year experience requirement.

(c) The MP&E inspector shall demonstrate the following qualifications:

(1) A comprehensive knowledge of construction, testing, inspecting and repair of railroad freight cars, passenger cars, locomotives and air brakes;

(2) The ability to understand and detect deviations from:

(i) Railroad equipment maintenance standards accepted in the industry; and

(ii) The Freight Car Safety Standards, Safety Glazing Standards, Locomotive Safety Standards, Safety Appliance Standards and Power Brake Standards.

(3) The knowledge of railroad operating procedures associated with the operation of freight cars, passenger cars, locomotives and air brakes sufficient to understand the safety significance of deviations and combinations of deviations; and

(4) Specialized knowledge of proper remedial action to be taken in order to bring defective freight cars, passenger cars, locomotives, and air brakes into compliance with applicable Federal standards.

§ 212.215 Locomotive inspector.

(a) The locomotive inspector is required, at a minimum, to be able to conduct independent inspections of locomotives and air brake systems for the purpose of determining compliance with applicable sections of the Safety Glazing Standards (49 CFR part 223), Locomotive Safety Standards (49 CFR part 229), Safety Appliance Standards (49 CFR part 231) and Power Brake Standards (49 CFR part 232), to make reports of those inspections and to recommend the institution of enforcement actions when appropriate to promote compliance.

(b) The locomotive inspector is required, at a minimum, to have at least four years of experience in locomotive construction or maintenance. A bachelor's degree in mechanical engineering or a related technical specialization may be substituted for two of the four years of this experience requirement and successful completion of the apprentice training program may be substituted for the four year experience requirement.

(c) The locomotive inspector shall demonstrate the following specific qualifications:

(1) A comprehensive knowledge of construction, testing, inspecting and repair of locomotive and air brakes;

(2) The ability to understand and detect deviations from:

(i) Railroad equipment maintenance standards accepted in the industry; and

(ii) Safety Glazing Standards, Locomotive Safety Standards, Safety Appliance Standards and Power Brake Standards;

(3) The knowledge of railroad operating procedures associated with the operation of locomotives and air brakes sufficient to understand the safety significance of deviations and combinations of deviations; and

(4) Specialized knowledge of proper remedial action to be taken in order to bring defective locomotives, and air brakes into compliance with applicable Federal standards.

§ 212.217 Car inspector.

(a) The car inspector is required, at a minimum, to be able to conduct independent inspections of railroad rolling stock for the purpose of determining compliance with all sections of the Freight Car Safety Standards (49 CFR part 215), Safety Glazing Standards (49 CFR part 223), Safety Appliance Standards (49 CFR part 231) and Power Brake Standards (49 CFR part 232), to make reports of those inspections and to recommend the institution of enforcement actions when appropriate to promote compliance.

(b) The car inspector is required, at a minimum, to have at least two years of recent experience in freight car or passenger car construction, maintenance or inspection. Successful completion of the apprentice training program may be substituted for this two year experience requirement.

(c) The car inspector shall demonstrate the following specific qualifications:

(1) A comprehensive knowledge of the construction and testing of freight and passenger cars and air brakes;

(2) The ability to understand and detect deviations from:

(i) Railroad freight and passenger car maintenance standards accepted in the industry; and

(ii) The Freight Car Safety Standards (49 CFR part 215), Safety Glazing Standards (49 CFR part 223), Safety Appliance Standards (49 CFR part 231) and Power Brake Standards (49 CFR part 232);

(3) The knowledge of railroad operating procedures associated with the operation of freight and passenger cars and air brakes sufficient to understand the safety significance of deviations and combinations of deviations; and

(4) Specialized knowledge of proper remedial action to be taken in order to bring defective freight and passenger car equipment and air brakes into compliance with applicable Federal standards.

§ 212.219 Apprentice MP&E inspector.

(a) The apprentice MP&E inspector must be enrolled in a program of training prescribed by the Associate Administrator leading to qualification as an MP&E inspector. The apprentice may not participate in investigative and surveillance activities, except as an assistant to a qualified State or FRA inspector while accompanying that qualified inspector.

(b) An apprentice MP&E inspector shall demonstrate basic knowledge of railroad equipment and air brake inspection, testing and maintenance, prior to being enrolled in the program.

§ 212.221 Operating practices inspector.

(a) The operating practices inspector is required, at a minimum, to be able to conduct independent inspections for the purpose of determining compliance with all sections of the Federal operating practice regulations (49 CFR parts 217, 218, 219, 220, 221, 225 and 228) and the Hours of Service Act (45 U.S.C. 61–64b), to make reports of those inspections, and to recommend the institution of enforcement actions when appropriate to promote compliance.

(b) The operating practices inspector is required at a minimum to have at least four years of recent experience in developing or administering railroad operating rules. Successful completion of the apprentice training program may be substituted for this four year experience requirement.

(c) The operating practices inspector shall demonstrate the following specific qualifications:

(1) A comprehensive knowledge of railroad operating practices, railroad operating rules, duties of railroad employees, and general railroad nomenclature;

(2) The ability to understand and detect deviations from:

(i) Railroad operating rules accepted in the industry; and

(ii) Federal operating practice regulations;

(3) Knowledge of operating practices and rules sufficient to understand the safety significance of deviations; and

(4) Specialized knowledge of the requirements of the Federal operating practices regulations listed in paragraph (a) of this section, including the remedial action required to bring railroad operations into compliance with the regulations.

[47 FR 41051, Sept. 16, 1982, as amended at 50 FR 31578, Aug. 2, 1985]

§ 212.223 Operating practices compliance inspector.

(a) The operating practices compliance inspector is required, at a minimum, to be able to conduct independent inspections for the purpose of determining compliance with the requirements of the following:

(1) Operating Rules—blue flag (49 CFR part 218);

(2) Control of Alcohol and Drug Use (49 CFR part 219);

(3) Rear End Marking Device Regulations (49 CFR part 221);

(4) Railroad accidents/incidents: reports classification and investigations (49 CFR part 225); and

(5) Hours of Service Act (45 U.S.C. 61–64b) and implementing regulations (49 CFR part 228); to make reports of those inspections and to recommend the institution of enforcement actions when appropriate to promote compliance.

(b) The operating practices compliance inspector is required, at a minimum, to have at least two years of recent experience in developing or administering railroad operating rules.

Successful completion of the apprentice training program may be substituted for the two year experience requirement.

(c) The compliance inspector shall demonstrate the following specific qualifications.

(1) A basic knowledge of railroad operations, duties of railroad employees and general railroad safety as it relates to the protection of railroad employees;

(2) A basic knowledge of railroad rules and practices;

(3) The ability to understand and detect deviations from the requirements cited in paragraph (a) of this section; and

(4) Specialized knowledge of the requirements of the Federal operating practices regulations listed in paragraph (a) of this section, including the remedial action required to bring defective conditions into compliance with the applicable Federal standards.

[47 FR 41051, Sept. 16, 1982, as amended at 50 FR 31578, Aug. 2, 1985]

§ 212.225 Apprentice operating practices inspector.

(a) The apprentice operating practices inspector must be enrolled in a program of training prescribed by the Associate Administrator leading to qualification as an inspector. The apprentice inspector may not participate in investigative and surveillance activities, except as an assistant to a qualified State or FRA inspector while accompanying that qualified inspector.

(b) An apprentice operating practices inspector shall demonstrate basic knowledge of railroad operating practices, railroad operating rules and general duties of railroad employees prior to being enrolled in the program.

§ 212.227 Hazardous materials inspector.

(a) The hazardous materials inspector is required, at a minimum, to be able to conduct independent inspections to determine compliance with all pertinent sections of the Federal hazardous materials regulations (49 CFR parts 171 through 174, and 179), to make reports of those inspections and findings, and to recommend the institution of enforcement actions when appropriate to promote compliance.

(b) The hazardous materials inspector is required, at a minimum, to have at least two years of recent experience in developing, administering, or performing managerial functions related to compliance with the hazardous materials regulations; four years of recent experience in performing functions related to compliance with the hazardous materials regulations; or a bachelor's degree in a related technical specialization. Successful completion of the apprentice training program may be substituted for this requirement.

(c) The hazardous materials inspector shall demonstrate the following specific qualifications:

(1) A comprehensive knowledge of the transportation and operating procedures employed in the railroad, shipping, or manufacturing industries associated with the transportation of hazardous materials;

(2) Knowledge and ability to understand and detect deviations from the Department of Transportation's Hazardous Materials Regulations, including Federal requirements and industry standards for the manufacturing of bulk packaging used in the transportation of hazardous materials by railroad;

(3) Knowledge of the physical and chemical properties and chemical hazards associated with hazardous materials that are transported by railroad;

(4) Knowledge of the proper remedial actions required to bring railroad, shipper, and/or manufacturing facilities into compliance with the Federal regulations; and

(5) Knowledge of the proper remedial actions required when a hazardous materials transportation accident or incident occurs.

[57 FR 28115, June 24, 1992]

§ 212.229 Apprentice hazardous materials inspector.

(a) The apprentice hazardous materials inspector must be enrolled in a program of training prescribed by the Associate Administrator for Safety leading to qualification as a hazardous materials inspector. The apprentice may not participate in investigative and surveillance activities, except as

an assistant to a qualified State or FRA inspector while accompanying that qualified inspector.

(b) An apprentice hazardous materials inspector shall demonstrate a basic knowledge of the chemical hazards associated with hazardous materials that are transported by railroad, including requirements such as shipping papers, marking, labeling, placarding, and the manufacturing and maintenance of packagings associated with these shipments.

[57 FR 28116, June 24, 1992]

§ 212.231 Highway-rail grade crossing inspector.

(a) The highway-rail grade crossing inspector is required, at a minimum, to be able to conduct independent inspections of all types of highway-rail grade crossing warning systems for the purpose of determining compliance with Grade Crossing Signal System Safety Rules (49 CFR part 234), to make reports of those inspections, and to recommend institution of enforcement actions when appropriate to promote compliance.

(b) The highway-rail grade crossing inspector is required, at a minimum, to have at least four years of recent experience in highway-rail grade crossing construction or maintenance. A bachelor's degree in engineering or a related technical specialization may be substituted for two of the four years of this experience requirement. Successful completion of an apprentice training program under § 212.233 may be substituted for the four years of this experience requirement.

(c) The highway-rail grade crossing inspector shall demonstrate the following specific qualifications:

(1) A comprehensive knowledge of highway-rail grade crossing nomenclature, inspection techniques, maintenance requirements, and methods;

(2) The ability to understand and detect deviations from:

(i) Grade crossing signal system maintenance, inspection and testing standards accepted in the industry; and

(ii) The Grade Crossing Signal System Safety Rules (49 CFR part 234);

(3) Knowledge of operating practices and highway-rail grade crossing systems sufficient to understand the safety significance of deviations and combinations of deviations from § 212.231(c)(2) (i) and (ii);

(4) Specialized knowledge of the requirements of the Grade Crossing Signal System Safety Rules (49 CFR part 234), including the remedial action required to bring highway-rail grade crossing signal systems into compliance with those Rules;

(5) Specialized knowledge of highway-rail grade crossing standards contained in the Manual on Uniform Traffic Control Devices; and

(6) Knowledge of railroad signal systems sufficient to ensure that highway-rail grade crossing warning systems and inspections of those systems do not adversely affect the safety of railroad signal systems.

(d) A State signal and train control inspector qualified under this part and who has demonstrated the ability to understand and detect deviations from the Grade Crossing Signal System Safety Rules (49 CFR part 234) is deemed to meet all requirements of this section and is qualified to conduct independent inspections of all types of highway-rail grade crossing warning systems for the purpose of determining compliance with Grade Crossing Signal System Safety Rules (49 CFR part 234), to make reports of those inspections, and to recommend institution of enforcement actions when appropriate to promote compliance.

[59 FR 50104, Sept. 30, 1994]

§ 212.233 Apprentice highway-rail grade crossing inspector.

(a) An apprentice highway-rail grade crossing inspector shall be enrolled in a program of training prescribed by the Associate Administrator for Safety leading to qualification as a highway-rail grade crossing inspector. The apprentice inspector may not participate in investigative and surveillance activities, except as an assistant to a qualified State or FRA inspector while accompanying that qualified inspector.

(b) Prior to being enrolled in the program the apprentice inspector shall demonstrate:

(1) Working basic knowledge of electricity;

(2) The ability to use electrical test equipment in direct current and alternating current circuits; and

(3) A basic knowledge of highway-rail grade crossing inspection and maintenance methods and procedures.

[59 FR 50104, Sept. 30, 1994]

§ 212.235 Inapplicable qualification requirements.

The Associate Administrator may determine that a specific requirement of this subpart is inapplicable to an identified position created by a State agency if it is not relevant to the actual duties of the position. The determination is made in writing.

[47 FR 41051, Sept. 16, 1982. Redesignated at 57 FR 28115, June 24, 1992. Further redesignated at 59 FR 50104, Sept. 30, 1994]

PART 213—TRACK SAFETY STANDARDS

Subpart A—General

Sec.
213.1 Scope of part.
213.3 Application.
213.4 Excepted track.
213.5 Responsibility of track owners.
213.7 Designation of qualified persons to supervise certain renewals and inspect track.
213.9 Classes of track: Operating speed limits.
213.11 Restoration or renewal of track under traffic conditions.
213.13 Measuring track not under load.
213.15 Civil penalty.
213.17 Exemptions.

Subpart B—Roadbed

213.31 Scope.
213.33 Drainage.
213.37 Vegetation.

Subpart C—Track Geometry

213.51 Scope.
213.53 Gage.
213.55 Alinement.
213.57 Curves; elevation and speed limitations.
213.59 Elevation of curved track; runoff.
213.63 Track surface.

Subpart D—Track Structure

213.101 Scope.
213.103 Ballast; general.
213.109 Crossties.
213.113 Defective rails.
213.115 Rail end mismatch.
213.121 Rail joints.
213.123 Tie plates.
213.127 Rail fastenings.
213.133 Turnouts and track crossings generally.
213.135 Switches.
213.137 Frogs.
213.139 Spring rail frogs.
213.141 Self-guarded frogs.
213.143 Frog guard rails and guard faces; gage.

Subpart E—Track Appliances and Track-Related Devices

213.201 Scope.
213.205 Derails.

Subpart F—Inspection

213.231 Scope.
213.233 Track inspections.
213.235 Switch and track crossing inspections.
213.237 Inspection of rail.
213.239 Special inspections.
213.241 Inspection records.

APPENDIX A TO PART 213—MAXIMUM ALLOWABLE OPERATING SPEEDS FOR CURVED TRACK

APPENDIX B TO PART 213—SCHEDULE OF CIVIL PENALTIES

AUTHORITY: 45 U.S.C. 431 and 438, as amended; Pub. L. 100–342; and 49 CFR 1.49(m).

SOURCE: 36 FR 20336, Oct. 20, 1971, unless otherwise noted.

Subpart A—General

§ 213.1 Scope of part.

This part prescribes initial minimum safety requirements for railroad track that is part of the general railroad system of transportation. The requirements prescribed in this part apply to specific track conditions existing in isolation. Therefore, a combination of track conditions, none of which individually amounts to a deviation from the requirements in this part, may require remedial action to provide for safe operations over that track.

§ 213.3 Application.

(a) Except as provided in paragraph (b) of this section, this part applies to all standard gage track in the general railroad system of transportation.

(b) This part does not apply to track—

(1) Located inside an installation which is not part of the general railroad system of transportation; or

(2) Used exclusively for rapid transit service in a metropolitan or suburban area.

(Sec. 202, 84 Stat. 971 (45 U.S.C. 431); sec. 1.49(m) of the regulations of the Secretary of Transportation, 49 CFR 1.49(m))

[49 FR 1988, Jan. 18, 1984]

§213.4 Excepted track.

A track owner may designate a segment of track as excepted track provided that:

(a) The segment is identified in the timetable, special instructions, general order, or other appropriate records which are available for inspection during regular business hours;

(b) The identified segment is not located within 30 feet of an adjacent track which can be subjected to simultaneous use at speeds in excess of 10 miles per hour;

(c) The identified segment is inspected in accordance with §213.233(c) at the frequency specified for Class 1 track;

(d) The identified segment of track is not located on a bridge including the track approaching the bridge for 100 feet on either side, or located on a public street or highway, if railroad cars containing commodities required to be placarded by the Hazardous Materials Regulations (49 CFR part 172), are moved over the track; and

(e) The railroad conducts operations on the identified segment under the following conditions:

(1) No train shall be operated at speeds in excess of 10 miles per hour;

(2) No revenue passenger train shall be operated; and

(3) No freight train shall be operated that contains more than five cars required to be placarded by the Hazardous Materials Regulations (49 CFR part 172).

[47 FR 39401, Sept. 7, 1982]

§213.5 Responsibility of track owners.

(a) Except as provided in paragraph (b) of this section, any owner of track to which this part applies who knows or has notice that the track does not comply with the requirements of this part, shall—

(1) Bring the track into compliance;

(2) Halt operations over that track; or

(3) Operate under authority of a person designated under §213.7(a), who has at least one year of supervisory experience in railroad track maintenance, subject to conditions set forth in this part.

(b) If an owner of track to which this part applies designates a segment of track as ''excepted track'' under the provisions of §213.4, operations may continue over that track without complying with the provisions of subparts B, C, D, and E.

(c) If an owner of track to which this part applies assigns responsibility for the track to another person (by lease or otherwise), any party to that assignment may petition the Federal Railroad Administrator to recognize the person to whom that responsibility is assigned for purposes of compliance with this part. Each petition must be in writing and include the following:

(1) The name and address of the track owner;

(2) The name and address of the person to whom responsibility is assigned (assignee);

(3) A statement of the exact relationship between the track owner and the assignee;

(4) A precise identification of the track;

(5) A statement as to the competence and ability of the assignee to carry out the duties of the track owner under this part; and

(6) A statement signed by the assignee acknowledging the assignment to him of responsibility for purposes of compliance with this part.

(d) If the Administrator is satisfied that the assignee is competent and able to carry out the duties and responsibilities of the track owner under this part, he may grant the petition subject to any conditions he deems necessary. If the Administrator grants a petition under this section, he shall so notify the owner and the assignee. After the Administrator grants a petition, he

may hold the track owner or the assignee or both responsible for compliance with this part and subject to penalties under § 213.15.

(e) A common carrier by railroad which is directed by the Interstate Commerce Commission to provide service over the track of another railroad under 49 U.S.C. 11125 is considered the owner of that track for the purposes of the application of this part during the period the directed service order remains in effect.

[47 FR 39402, Sept. 7, 1982]

§ 213.7 Designation of qualified persons to supervise certain renewals and inspect track.

(a) Each track owner to which this part applies shall designate qualified persons to supervise restorations and renewals of track under traffic conditions. Each person designated must have—

(1) At least—

(i) One year of supervisory experience in railroad track maintenance; or

(ii) A combination of supervisory experience in track maintenance and training from a course in track maintenance or from a college level educational program related to track maintenance;

(2) Demonstrated to the owner that he—

(i) Knows and understands the requirements of this part;

(ii) Can detect deviations from those requirements; and

(iii) Can prescribe appropriate remedial action to correct or safely compensate for those deviations; and

(3) Written authorization from the track owner to prescribe remedial actions to correct or safely compensate for deviations from the requirements in this part.

(b) Each track owner to which this part applies shall designate qualified persons to inspect track for defects. Each person designated must have—

(1) At least—

(i) One year of experience in railroad track inspection; or

(ii) A combination of experience in track inspection and training from a course in track inspection or from a college level educational program related to track inspection;

(2) Demonstrated to the owner that he—

(i) Knows and understands the requirements of this part;

(ii) Can detect deviations from those requirements; and

(iii) Can prescribe appropriate remedial action to correct or safely compensate for those deviations; and

(3) Written authorization from the track owner to prescribe remedial actions to correct or safely compensate for deviations from the requirements of this part, pending review by a qualified person designated under paragraph (a) of this section.

(c) With respect to designations under paragraphs (a) and (b) of this section, each track owner must maintain written records of—

(1) Each designation in effect;

(2) The basis for each designation; and

(3) Track inspections made by each designated qualified person as required by § 213.241.

These records must be kept available for inspection or copying by the Federal Railroad Administrator during regular business hours.

[36 FR 20336, Oct. 20, 1971, as amended at 38 FR 875, Jan. 5, 1973]

§ 213.9 Classes of track: Operating speed limits.

(a) Except as provided in paragraphs (b) and (c) of this section and §§ 213.57(b), 213.59(a), 213.113(a), and 213.137 (b) and (c), the following maximum allowable operating speeds apply:

[In miles per hour]

Over track that meets all of the requirements prescribed in this part for—	The maximum allowable operating speed for freight trains is—	The maximum allowable operating speed for passenger trains is—
Class 1 track	10	15
Class 2 track	25	30
Class 3 track	40	60
Class 4 track	60	80
Class 5 track	80	90
Class 6 track	110	110

(b) If a segment of track does not meet all of the requirements for its intended class, it is reclassified to the next lowest class of track for which it does meet all of the requirements of this part. However, if the segment of

track does not at least meet the requirements for Class 1 track, operations may continue at Class 1 speeds for a period of not more than 30 days without bringing the track into compliance, under the authority of a person designated under §213.7(a), who has at least one year of supervisory experience in railroad track maintenance, after that person determines that operations may safely continue and subject to any limiting conditions specified by such person.

(c) Maximum operating speed may not exceed 110 m.p.h. without prior approval of the Federal Railroad Administrator. Petitions for approval must be filed in the manner and contain the information required by §211.11 of this chapter. Each petition must provide sufficient information concerning the performance characteristics of the track, signaling, grade crossing protection, trespasser control where appropriate, and equipment involved and also concerning maintenance and inspection practices and procedures to be followed, to establish that the proposed speed can be sustained in safety.

[36 FR 20336, Oct. 20, 1971, as amended at 38 FR 875, Jan. 5, 1973; 38 FR 23405, Aug. 30, 1973; 47 FR 39402, Sept. 7, 1982; 48 FR 35883, Aug. 8, 1983]

§213.11 Restoration or renewal of track under traffic conditions.

If during a period of restoration or renewal, track is under traffic conditions and does not meet all of the requirements prescribed in this part, the work on the track must be under the continuous supervision of a person designated under §213.7(a) who has at least one year of supervisory experience in railroad track maintenance. The term ''continuous supervision'' as used in this section means the physical presence of that person at a job site. However, since the work may be performed over a large area, it is not necessary that each phase of the work be done under the visual supervision of that person.

[47 FR 39402, Sept. 7, 1982]

§213.13 Measuring track not under load.

When unloaded track is measured to determine compliance with requirements of this part, the amount of rail movement, if any, that occurs while the track is loaded must be added to the measurement of the unloaded track.

[38 FR 875, Jan. 5, 1973]

§213.15 Civil penalty.

Any person (including a railroad, any manager, supervisor, official, or other employee or agent of a railroad, any owner of track on which a railroad operates, or any person held by the Federal Railroad Administrator to be responsible under §213.5(d)) who violates any requirement of this part or causes the violation of any such requirement is subject to a civil penalty of at least $250 and not more than $10,000 per violation, except that: Penalties may be assessed against individuals only for willful violations, and, where a grossly negligent violation or a pattern of repeated violations has created an imminent hazard of death or injury to persons, or has caused death or injury, a penalty not to exceed $20,000 per violation may be assessed. Each day a violation continues shall constitute a separate offense. See appendix B to this part for a statement of agency civil penalty policy.

[36 FR 20336, Oct. 20, 1971, as amended at 53 FR 28598, July 28, 1988; 53 FR 52924, Dec. 29, 1988]

§213.17 Exemptions.

(a) Any owner of track to which this part applies may petition the Federal Railroad Administrator for exemption from any or all requirements prescribed in this part.

(b) Each petition for exemption under this section must be filed in the manner and contain the information required by §§211.7 and 211.9 of this chapter.

(c) If the Administrator finds that an exemption is in the public interest and is consistent with railroad safety, he may grant the exemption subject to any conditions he deems necessary. Notice of each exemption granted is published in the FEDERAL REGISTER together with a statement of the reasons therefor.

[36 FR 20336, Oct. 20, 1971, as amended at 48 FR 35883, Aug. 8, 1983]

Subpart B—Roadbed

§ 213.31 Scope.

This subpart prescribes minimum requirements for roadbed and areas immediately adjacent to roadbed.

§ 213.33 Drainage.

Each drainage or other water carrying facility under or immediately adjacent to the roadbed must be maintained and kept free of obstruction, to accommodate expected water flow for the area concerned.

§ 213.37 Vegetation.

Vegetation on railroad property which is on or immediately adjacent to roadbed must be controlled so that it does not—

(a) Become a fire hazard to track-carrying structures;

(b) Obstruct visibility of railroad signs and signals;

(c) Interfere with railroad employees performing normal trackside duties;

(d) Prevent proper functioning of signal and communication lines; or

(e) Prevent railroad employees from visually inspecting moving equipment from their normal duty stations.

Subpart C—Track Geometry

§ 213.51 Scope.

This subpart prescribes requirements for the gage, alinement, and surface of track, and the elevation of outer rails and speed limitations for curved track.

§ 213.53 Gage.

(a) Gage is measured between the heads of the rails at right-angles to the rails in a plane five-eighths of an inch below the top of the rail head.

(b) Gage must be within the limits prescribed in the following table:

Class of track	The gage must be at least—	But not more than
1	4′8″	4′10″
2 and 3	4′8″	4′9¾″
4 and 5	4′8″	4′9½″
6	4′8″	4′9¼″

[36 FR 20336, Oct. 20, 1971, as amended at 47 FR 39402, Sept. 7, 1982]

§ 213.55 Alinement.

Alinement may not deviate from uniformity more than the amount prescribed in the following table:

Class of track	Tangent track—The deviation of the mid-offset from 62-foot line[1] may not be more than—	Curved track—The deviation of the mid-ordinate from 62-foot chord[2] may not be more than—
1	5″	5″
2	3″	3″
3	1¾″	1¾″
4	1½″	1½″
5	¾″	⅝″
6	½″	⅜″

[1] The ends of the line must be at points on the gage side of the line rail, five-eights of an inch below the top of the railhead. Either rail may be used as the line rail, however, the same rail must be used for the full length of that tangential segment of track.

[2] The ends of the chord must be at points on the gage side of the outer rail, five-eighths of an inch below the top of the railhead.

§ 213.57 Curves; elevation and speed limitations.

(a) Except as provided in § 213.63, the outside rail of a curve may not be lower than the inside rail or have more than 6 inches of elevation.

(b) The maximum allowable operating speed for each curve is determined by the following formula:

$$V_{max}=\sqrt{(E_a+3)/0.0007d}$$

where

V_{max}=Maximum allowable operating speed (miles per hour).

E_a=Actual elevation of the outside rail (inches).

d=Degree of curvature (degrees).

Appendix A is a table of maximum allowable operating speed computed in accordance with this formula for various elevations and degrees of curvature.

§ 213.59 Elevation of curved track; runoff.

(a) If a curve is elevated, the full elevation must be provided throughout the curve, unless physical conditions do not permit. If elevation runoff occurs in a curve, the actual minimum elevation must be used in computing the maximum allowable operating speed for that curve under § 213.57(b).

(b) Elevation runoff must be at a uniform rate, within the limits of track surface deviation prescribed in § 213.63,

and it must extend at least the full length of the spirals. If physical conditions do not permit a spiral long enough to accommodate the minimum length of runoff, part of the runoff may be on tangent track.

§213.63 Track surface.

Each owner of the track to which this part applies shall maintain the surface of its track within the limits prescribed in the following table:

Track surface	Class of track					
	1	2	3	4	5	6
The runoff in any 31 feet of rail at the end of a raise may not be more than	3½″	3″	2″	1½″	1″	½″
The deviation from uniform profile on either rail at the midordinate of a 62-foot chord may not be more than	3″	2¾″	2¼″	2″	1¼″	½″
Deviation from designated elevation on spirals may not be more than	1¾″	1½″	1¼″	1″	¾″	½″
Variation in cross level on spirals in any 31 feet may not be more than	2″	1¾″	1¼″	1″	¾″	½″
Deviation from zero cross level at any point on tangent or from designated elevation on curves between spirals may not be more than	3″	2″	1¾″	1¼″	1″	½″
The difference in cross level between any two points less than 62 feet apart on tangents and curves between spirals may not be more than	3″	2″	1¾″	1¼″	1″	⅝″

Subpart D—Track Structure

§213.101 Scope.

This subpart prescribes minimum requirements for ballast, crossties, track assembly fittings, and the physical condition of rails.

§213.103 Ballast; general.

Unless it is otherwise structurally supported, all track must be supported by material which will—

(a) Transmit and distribute the load of the track and railroad rolling equipment to the subgrade;

(b) Restrain the track laterally, longitudinally, and vertically under dynamic loads imposed by railroad rolling equipment and thermal stress exerted by the rails;

(c) Provide adequate drainage for the track; and

(d) Maintain proper track cross-level, surface, and alinement.

§213.109 Crossties.

(a) Crossties shall be made of a material to which rail can be securely fastened.

(b) Each 39 foot segment of track shall have:

(1) A sufficient number of crossties which in combination provide effective support that will:

(i) Hold gage within the limits prescribed in §213.53(b);

(ii) Maintain surface within the limits prescribed in §213.63; and

(iii) Maintain alinement within the limits prescribed in §213.55.

(2) The minimum number and type of crossties specified in paragraph (c) of this section effectively distributed to support the entire segment; and

(3) At least one crosstie of the type specified in paragraph (c) of this section that is located at a joint location as specified in paragraph (d) of this section.

(c) Each 39 foot segment of: Class 1 track shall have five crossties; Classes 2 and 3 track shall have eight crossties; Classes 4 and 5 track shall have 12 crossties; and Class 6 track shall have 14 crossties, which are not:

(1) Broken through;

(2) Split or otherwise impaired to the extent the crossties will allow the ballast to work through, or will not hold spikes or rail fasteners;

(3) So deteriorated that the tie plate or base of rail can move laterally more than ½ inch relative to the crossties; or

(4) Cut by the tie plate through more than 40 percent of a tie's thickness.

(d) Class 1 and Class 2 track shall have one crosstie whose centerline is within 24 inches of the rail joint location, and Classes 3 through 6 track shall have one crosstie whose centerline is within 18 inches of the rail joint location. The relative position of these ties is described in the following table.

Classes 1 and 2

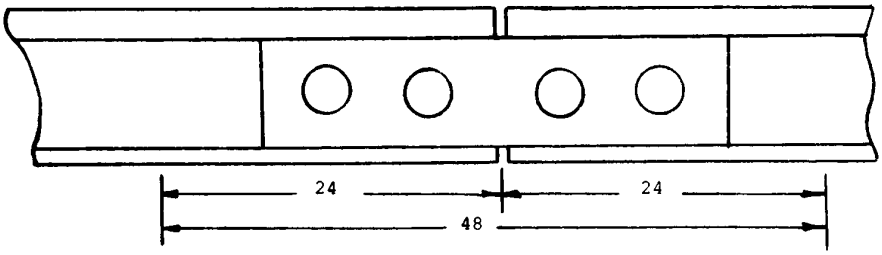

Each rail joint in Classes 1 and 2 track shall be supported by at least one crosstie specified in paragraph (c) of this section whose centerline is within the 48″ shown above.

Classes 3 through 6

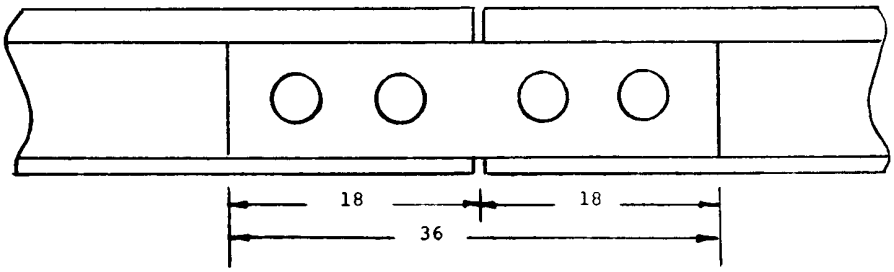

Each rail joint in Classes 3 through 6 track shall be supported by at least one crosstie specified in paragraph (c) of this section whose centerline is within the 36″ shown above.

[47 FR 39402, Sept. 7, 1982]

§ 213.113 Defective rails.

(a) When an owner of track to which this part applies learns, through inspection or otherwise, that a rail in that track contains any of the defects listed in the following table, a person designated under § 213.7 shall determine whether or not the track may continue in use. If he determines that the track may continue in use, operation over the defective rail is not permitted until—

(1) The rail is replaced; or

(2) The remedial action prescribed in the table is initiated:

REMEDIAL ACTION

Defect	Length of defect (inch)		Percent of rail head cross-sectional area weakened by defect		If defective rail is not replaced, take the remedial action prescribed in note
	More than	But not more than	Less than	But not less than	
Transverse fissure			20		B.
			100	20	B.
				100	A.
Compound fissure			20		B.
			100	20	B.
				100	A.
Detail fracture			20		C.
Engine burn fracture			100	20	D.
Defective weld				100	A or E and H.
Horizontal split head	0	2			H and F.

REMEDIAL ACTION—Continued

Defect	Length of defect (inch)		Percent of rail head cross-sectional area weakened by defect		If defective rail is not replaced, take the remedial action prescribed in note
	More than	But not more than	Less than	But not less than	
	2	4	.....	.....	I and G.
Vertical split head	4	.....	.....	.....	B.
	(1)	(1)	(1)	.....	A.
Split web	0	½	.....	.....	H and F.
Piped rail	½	3	.....	.....	I and G.
Head web separation	3	.....	.....	.....	B.
	(1)	(1)	(1)	.....	A.
	0	½	.....	.....	H and F.
Bolt hole crack	½	1½	.....	.....	G.
	1½	.....	.....	.....	B.
	(1)	(1)	(1)	.....	A.
Broken base	0	6	.....	.....	E.
	6	.....	.....	.....	A, or E and I.
Ordinary break	.....	.....	.....	.....	A or E.
Damaged rail	.....	.....	.....	.....	C.

[1] Break out in rail head.

AAAAANotes:

A. Assigned person designated under § 213.7 to visually supervise each operation over defective rail.

B. Limit operating speed over defective rail to that as authorized by a person designated under § 213.7(a), who has at least one year of supervisory experience in railroad track maintenance.

C. Apply joint bars bolted only through the outermost holes to defect within 20 days after it is determined to continue the track in use. In the case of Classes 3 through 6 track, limit operating speed over defective rail to 30 mph until angle bars are applied; thereafter limit speed to 60 mph or the maximum allowable speed under § 213.9 for the class of track concerned, whichever is lower.

D. Apply joint bars bolted only through the outermost holes to defect within 10 days after it is determined to continue the track in use. In the case of Classes 3 through 6 track, limit operating speed over the defective rail to 30 mph or less as authorized by a person designated under § 213.7(a), who has at least one year of supervisory experience in railroad track maintenance, until angle bars are applied; thereafter, limit speed to 60 mph or the maximum allowable speed under § 213.9 for the class of track concerned, whichever is lower.

E. Apply joint bars to defect and bolt in accordance with § 213.121 (d) and (e).

F. Inspect rail 90 days after it is determined to continue the track in use.

G. Inspect rail 30 days after it is determined to continue the track in use.

H. Limit operating speed over defective rail to 60 mph or the maximum allowable speed under § 213.9 for the class of track concerned, whichever is lower.

I. Limit operating speed over defective rail to 30 mph or the maximum allowable speed under § 213.9 for the class of track concerned, whichever is lower.

(b) As used in this section—

(1) *Transverse Fissure* means a progressive crosswise fracture starting from a crystalline center or nucleus inside the head from which it spreads outward as a smooth, bright, or dark, round or oval surface substantially at a right angle to the length of the rail. The distinguishing features of a transverse fissure from other types of fractures or defects are the crystalline center or nucleus and the nearly smooth surface of the development which surrounds it.

(2) *Compound Fissure* means a progressive fracture originating in a horizontal split head which turns up or down in the head of the rail as a smooth, bright, or dark surface progressing until substantially at a right angle to the length of the rail. Compound fissures require examination of both faces of the fracture to locate the horizontal split head from which they originate.

(3) *Horizontal Split Head* means a horizontal progressive defect originating inside of the rail head, usually one-quarter inch or more below the running surface and progressing horizontally in all directions, and generally accompanied by a flat spot on the running surface. The defect appears as a crack lengthwise of the rail when it reaches the side of the rail head.

(4) *Vertical Split Head* means a vertical split through or near the middle of the head, and extending into or through it. A crack or rust streak may show under the head close to the web or pieces may be split off the side of the head.

(5) *Split Web* means a lengthwise crack along the side of the web and extending into or through it.

(6) *Piped Rail* means a vertical split in a rail, usually in the web, due to

failure of the shrinkage cavity in the ingot to unite in rolling.

(7) *Broken Base* means any break in the base of a rail.

(8) *Detail Fracture* means a progressive fracture originating at or near the surface of the rail head. These fractures should not be confused with transverse fissures, compound fissures, or other defects which have internal origins. Detail fractures may arise from shelly spots, head checks, or flaking.

(9) *Engine Burn Fracture* means a progressive fracture originating in spots where driving wheels have slipped on top of the rail head. In developing downward they frequently resemble the compound or even transverse fissures with which they should not be confused or classified.

(10) *Ordinary Break* means a partial or complete break in which there is no sign of a fissure, and in which none of the other defects described in this paragraph are found.

(11) *Damaged Rail* means any rail broken or injured by wrecks, broken, flat, or unbalanced wheels, slipping, or similar causes.

[47 FR 39403, Sept. 7, 1982]

§ 213.115 Rail end mismatch.

Any mismatch of rails at joints may not be more than that prescribed by the following table:

Class of track	Any mismatch of rails at joints may not be more than the following—	
	On the trend of the rail ends (inch)	On the gage side of the rail ends (inch)
1	¼	¼
2	¼	3/16
3	3/16	3/16
4, 5	⅛	⅛
6	⅛	⅛

§ 213.121 Rail joints.

(a) Each rail joint, insulated joint, and compromise joint must be of the proper design and dimensions for the rail on which it is applied.

(b) If a joint bar on classes 3 through 6 track is cracked, broken, or because of wear allows vertical movement of either rail when all bolts are tight, it must be replaced.

(c) If a joint bar is cracked or broken between the middle two bolt holes it must be replaced.

(d) In the case of conventional jointed track, each rail must be bolted with at least two bolts at each joint in classes 2 through 6 track, and with at least one bolt in class 1 track.

(e) In the case of continuous welded rail track, each rail must be bolted with at least two bolts at each joint.

(f) Each joint bar must be held in position by track bolts tightened to allow the joint bar to firmly support the abutting rail ends and to allow longitudinal movement of the rail in the joint to accommodate expansion and contraction due to temperature variations. When out-of-face, no-slip, joint-to-rail contact exists by design, the requirements of this paragraph do not apply. Those locations are considered to be continuous welded rail track and must meet all the requirements for continuous welded rail track prescribed in this part.

(g) No rail or angle bar having a torch cut or burned bolt hole may be used in classes 3 through 6 track.

§ 213.123 Tie plates.

(a) In classes 3 through 6 track where timber crossties are in use there must be tie plates under the running rails on at least eight of any 10 consecutive ties.

(b) [Reserved]

[36 FR 20336, Oct. 20, 1971, as amended at 47 FR 39404, Sept. 7, 1982]

§ 213.127 Rail fastenings.

Each 39 foot segment of rail shall have a sufficient number of fastenings which, in the determination of a qualified Federal or State track inspector, effectively maintain gage within the limits prescribed in § 213.53(b). The term *qualified State track inspector* as used in this section means a track inspector who meets the qualification requirements of 49 CFR 212.203. (Formerly § 212.75).

[47 FR 39404, Sept. 7, 1982]

§ 213.133 Turnouts and track crossings generally.

(a) In turnouts and track crossings, the fastenings must be intact and

maintained so as to keep the components securely in place. Also, each switch, frog, and guard rail must be kept free of obstructions that may interfere with the passage of wheels.

(b) Classes 4 through 6 track must be equipped with rail anchors through and on each side of track crossings and turnouts, to restrain rail movement affecting the position of switch points and frogs.

(c) Each flangeway at turnouts and track crossings must be at least 1½ inches wide.

[36 FR 20336, Oct. 20, 1971, as amended at 38 FR 876, Jan. 5, 1973]

§ 213.135 Switches.

(a) Each stock rail must be securely seated in switch plates, but care must be used to avoid canting the rail by overtightening the rail braces.

(b) Each switch point must fit its stock rail properly, with the switch stand in either of its closed positions to allow wheels to pass the switch point. Lateral and vertical movement of a stock rail in the switch plates or of a switch plate on a tie must not adversely affect the fit of the switch point to the stock rail.

(c) Each switch must be maintained so that the outer edge of the wheel tread cannot contact the gage side of the stock rail.

(d) The heel of each switch rail must be secure and the bolts in each heel must be kept tight.

(e) Each switch stand and connecting rod must be securely fastened and operable without excessive lost motion.

(f) Each throw lever must be maintained so that it cannot be operated with the lock or keeper in place.

(g) Each switch position indicator must be clearly visible at all times.

(h) Unusually chipped or worn switch points must be repaired or replaced. Metal flow must be removed to insure proper closure.

§ 213.137 Frogs.

(a) The flangeway depth measured from a plane across the wheel-bearing area of a frog on class 1 track may not be less than 1⅜ inches, or less than 1½ inches on classes 2 through 6 track.

(b) If a frog point is chipped, broken, or worn more than five-eighths inch down and 6 inches back, operating speed over the frog may not be more than 10 miles per hour.

(c) If the tread portion of a frog casting is worn down more than three-eighths inch below the original contour, operating speed over that frog may not be more than 10 miles per hour.

§ 213.139 Spring rail frogs.

(a) The outer edge of a wheel tread may not contact the gage side of a spring wing rail.

(b) The toe of each wing rail must be solidly tamped and fully and tightly bolted.

(c) Each frog with a bolt hole defect or head-web separation must be replaced.

(d) Each spring must have a tension sufficient to hold the wing rail against the point rail.

(e) The clearance between the hold-down housing and the horn may not be more than one-fourth of an inch.

§ 213.141 Self-guarded frogs.

(a) The raised guard on a self-guarded frog may not be worn more than three-eighths of an inch.

(b) If repairs are made to a self-guarded frog without removing it from service, the guarding face must be restored before rebuilding the point.

§ 213.143 Frog guard rails and guard faces; gage.

The guard check and guard face gages in frogs must be within the limits prescribed in the following table:

Class of track	Guard check gage—The distance between the gage line of a frog to the guard line[1] of its guard rail or guarding face, measured across the track at right angles to the gage line,[2] may not be less than—	Guard face gage—The distance between guard lines,[1] measured across the track at right angles to the gage line,[2] may not be more than—
1	4′6⅛″	4′5¼″
2	4′6¼″	4′5⅛″
3, 4	4′6⅜″	4′5⅛″

Class of track	Guard check gage—The distance between the gage line of a frog to the guard line[1] of its guard rail or guarding face, measured across the track at right angles to the gage line,[2] may not be less than—	Guard face gage—The distance between guard lines,[1] measured across the track at right angles to the gage line,[2] may not be more than—
5, 6	4′6½″	4′5″

[1] Aline along that side of the flangeway which is nearer to the center of the track and at the same elevation as the gage line.

[2] Aline ⅝ inch below the top of the center line of the head of the running rail, or corresponding location of the tread portion of the track structure.

Subpart E—Track Appliances and Track-Related Devices

§ 213.201 Scope.

This subpart prescribes minimum requirements for certain track appliances and track-related devices.

§ 213.205 Derails.

(a) Each derail must be clearly visible. When in a locked position a derail must be free of any lost motion which would allow it to be operated without removing the lock.

[36 FR 20336, Oct. 20, 1971, as amended at 47 FR 39404, Sept. 7, 1982]

Subpart F—Inspection

§ 213.231 Scope.

This subpart prescribes requirements for the frequency and manner of inspecting track to detect deviations from the standards prescribed in this part.

§ 213.233 Track inspections.

(a) All track must be inspected in accordance with the schedule prescribed in paragraph (c) of this section by a person designated under § 213.7.

(b) Each inspection must be made on foot or by riding over the track in a vehicle at a speed that allows the person making the inspection to visually inspect the track structure for compliance with this part. However, mechanical, electrical and other track inspection devices may be used to supplement visual inspection. If a vehicle is used for visual inspection, the speed of the vehicle may not be more than 5 miles per hour when passing over track crossings, highway crossings, or switches.

(c) Each track inspection must be made in accordance with the following schedule:

Class of track	Type of track	Required frequency
1, 2, 3	Main track and sidings.	*Twice weekly* with at least 1 calendar day interval between inspections, if the track carries passenger trains or more than 10 million gross tons of traffic during the preceding calendar year.
1, 2, 3	Other than main track and sidings.	*Monthly* with at least 20 calendar days interval between inspections.
4, 5, 6	.....	*Twice weekly* with at least 1 calendar day interval between inspections.

(d) If the person making the inspection finds a deviation from the requirements of this part, he shall immediately initiate remedial action.

[36 FR 20336, Oct. 20, 1971, as amended at 40 FR 8558, Feb. 28, 1975]

§ 213.235 Switch and track crossing inspections.

(a) Except as provided in paragraph (b) of this section, each switch and track crossing must be inspected on foot at least monthly.

(b) In the case of track that is used less than once a month, each switch and track crossing must be inspected on foot before it is used.

§ 213.237 Inspection of rail.

(a) In addition to the track inspections required by § 213.233, at least once a year a continuous search for internal defects must be made of all jointed and welded rails in Classes 4 through 6 track, and Class 3 track over which passenger trains operate. However, in the case of a new rail, if before installation or within 6 months thereafter, it is inductively or ultrasonically inspected over its entire length and all

defects are removed, the next continuous search for internal defects need not be made until 3 years after that inspection.

(b) Inspection equipment must be capable of detecting defects between joint bars, in the area enclosed by joint bars.

(c) Each defective rail must be marked with a highly visible marking on both sides of the web and base.

[36 FR 20336, Oct. 20, 1971, as amended at 38 FR 876, Jan. 5, 1973]

§ 213.239 Special inspections.

In the event of fire, flood, severe storm, or other occurrence which might have damaged track structure, a special inspection must be made of the track involved as soon as possible after the occurrence.

§ 213.241 Inspection records.

(a) Each owner of track to which this part applies shall keep a record of each inspection required to be performed on that track under this subpart.

(b) Each record of an inspection under §§ 213.4, 213.233 and 213.235 shall be prepared on the day the inspection is made and signed by the person making the inspection. Records must specify the track inspected, date of inspection, location and nature of any deviation from the requirements of this part, and the remedial action taken by the person making the inspection. The owner shall retain each record at its division headquarters for at least 1 year after the inspection covered by the record.

(c) Rail inspection records must specify the date of inspection, the location, and nature of any internal rail defects found, and the remedial action taken and the date thereof. The owner shall retain a rail inspection record for at least 2 years after the inspection and for 1 year after remedial action is taken.

(d) Each owner required to keep inspection records under this section shall make those records available for inspection and copying by the Federal Railroad Administrator.

[36 FR 20336, Oct. 20, 1971, as amended at 48 FR 35883, Aug. 8, 1983]

APPENDIX A TO PART 213—MAXIMUM ALLOWABLE OPERATING SPEEDS FOR CURVED TRACK

Elevation of outer rail (inches)

Degree of curvature	0	½	1	1½	2	2½	3	3½	4	4½	5	5½	6
Maximum allowable operating speed (mph)													
0°30′	93	100	107	.....	.....	.....	.....	.....	.....	.....	.....	.....	.....
0°40′	80	87	93	98	103	109	.....	.....	.....	.....	.....	.....	.....
0°50′	72	78	83	88	93	97	101	106	110	.....	.....	.....	.....
1°00′	66	71	76	80	85	89	93	96	100	104	107	110	.....
1°15′	59	63	68	72	76	79	83	86	89	93	96	99	101
1°30′	54	58	62	66	69	72	76	79	82	85	87	90	93
1°45′	50	54	57	61	64	67	70	73	76	78	81	83	86
2°00′	46	50	54	57	60	63	66	68	71	73	76	78	80
2°15′	44	47	50	54	56	59	62	64	67	69	71	74	76
2°30′	41	45	48	51	54	56	59	61	63	66	68	70	72
2°45′	40	43	46	48	51	54	56	58	60	62	65	66	68
3°00′	38	41	44	46	49	51	54	56	58	60	62	64	66
3°15′	36	39	42	45	47	49	51	54	56	57	59	61	63
3°30′	35	38	40	43	45	47	50	52	54	55	57	59	61
3°45′	34	37	39	41	44	46	48	50	52	54	55	57	59
4°00′	33	35	38	40	42	44	46	48	50	52	54	55	57
4°30′	31	33	36	38	40	42	44	45	47	49	50	52	54
5°00′	29	32	34	36	38	40	41	43	45	46	48	49	51
5°30′	28	30	32	34	36	38	40	41	43	44	46	47	48
6°00′	27	29	31	33	35	36	38	39	41	42	44	45	46
6°30′	26	28	30	31	33	35	36	38	39	41	42	43	45
7°00′	25	27	29	30	32	34	35	36	38	39	40	42	43
8°00′	23	25	27	28	30	31	33	34	35	37	38	39	40
9°00′	22	24	25	27	28	30	31	32	33	35	36	37	38
10°00′	21	22	24	25	27	28	29	31	32	33	34	35	36
11°00′	20	21	23	24	26	27	28	29	30	31	32	33	34
12°00′	19	20	22	23	24	26	27	28	29	30	31	32	33

[36 FR 20336, Oct. 20, 1971, as amended at 38 FR 876, Jan. 5, 1973]

APPENDIX B TO PART 213—SCHEDULE OF CIVIL PENALTIES[1]

Section	Violation	Willful violation
Subpart A—General:		
213.4(a) Excepted track[2]	$2,500	$5,000
213.4(b) Excepted track[2]	2,500	5,000
213.4(c) Excepted track[2]	2,500	5,000
213.4(d) Excepted track[2]	2,500	5,000
213.4(e):		
1 Excepted track	5,000	7,500
2 Excepted track	7,000	10,000
32 Excepted track	7,000	10,000
213.7 Designation of qualified persons to supervise certain renewals and inspect track	1,000	2,000
213.9 Classes of track: Operating speed limits	2,500	5,000
213.11 Restoration or renewal of track under traffic conditions	2,500	5,000
213.13 Measuring track not under load	1,000	2,000
Subpart B—Roadbed:		
213.33 Drainage	2,500	5,000
213.37 Vegetation	1,000	2,000
Subpart C—Track geometry:		
213.53 Gage	5,000	7,500
213.55 Alinement	5,000	7,500
213.57 Curves; elevation and speed limitations	2,500	5,000
213.59 Elevation of curved track; runoff	2,500	5,000
213.63 Track surface	5,000	7,500
Subpart D—Track surface:		
213.103 Ballast; general	2,500	5,000
213.109 Crossties		
(a) Material used	1,000	2,000
(b) Distribution of ties	2,500	5,000
(c) Sufficient number of nondefective ties	1,000	2,000
(d) Joint ties	2,500	5,000
213.113 Defective rails	5,000	7,500
213.115 Rail end mismatch	2,500	5,000
213.121 (a) Rail joints	2,500	5,000
213.121 (b) Rail joints	2,500	5,000
213.121 (c) Rail joints	5,000	7,500
213.121 (d) Rail joints	2,500	5,000
213.121 (e) Rail joints	2,500	5,000
213.121 (f) Rail joints	2,500	5,000
213.121 (g) Rail joints	5,000	7,500
213.123 Tie plates	1,000	2,000
213.127 Track spikes	2,500	5,000
213.133 Turnouts and track crossings generally	1,000	2,000
213.135 Switches:		
(a) through (g)	2,500	5,000
(h) chipped or worn points	5,000	7,500
213.137 Frogs	2,500	5,000
213.139 Spring rail frogs	5,000	7,500
213.141 Self-guarded frogs	2,500	5,000
213.143 Frog guard rails and guard faces; gage	2,500	5,000
Subpart E—Track appliances and track-related devices:		
213.205 Derails	2,500	5,000
Subpart F—Inspection:		
213.233 Track inspections	2,000	4,000
213.235 Switch and track crossings inspections	2,000	4,000
213.237 Inspection of rail	2,500	5,000

APPENDIX B TO PART 213—SCHEDULE OF CIVIL PENALTIES[1]—Continued

Section	Violation	Willful violation
213.239 Special inspections	2,500	5,000
213.241 Inspection records	1,000	2,000

[1] A penalty may be assessed against an individual only for a willful violation. The Administrator reserves the right to assess a penalty of up to $20,000 for any violation where circumstances warrant. See 49 CFR part 209, appendix A.

[2] In addition to assessment of penalties for each instance of noncompliance with the requirements identified by this footnote, track segments designated as excepted track that are or become ineligible for such designation by virtue of noncompliance with any of the requirements to which this footnote applies are subject to all other requirements of part 213 until such noncompliance is remedied.

[53 FR 52924, Dec. 29, 1988]

PART 214—RAILROAD WORKPLACE SAFETY

Subpart A—General

Sec.
214.1 Purpose and scope.
214.3 Application.
214.4 Preemptive effect.
214.5 Responsibility for compliance.
214.7 Definitions.

Subpart B—Bridge Worker Safety Standards

214.101 Purpose and scope.
214.103 Fall protection, generally.
214.105 Fall protection systems standards and practices.
214.107 Working over or adjacent to water.
214.109 Scaffolding.
214.111 Personal protective equipment, generally.
214.113 Head protection.
214.115 Foot protection.
214.117 Eye and face protection.

Subpart C—Roadway Worker Protection

214.301 Purpose and scope.
214.302 Information and collection requirements.
214.303 Railroad on-track safety programs, generally.
214.305 Compliance dates.
214.307 Review and approval of individual on-track safety programs by FRA.
214.309 On-track safety program documents.
214.311 Responsibility of employers.
214.313 Responsibility of individual roadway workers.
214.315 Supervision and communication.
214.317 On-track safety procedures, generally.
214.319 Working limits, generally.
214.321 Exclusive track occupancy.
214.323 Foul time.

214.325 Train coordination.
214.327 Inaccessible track.
214.329 Train approach warning provided by watchmen/lookouts.
214.331 Definite train location.
214.333 Information line-ups of trains.
214.335 On-track safety procedures for roadway work groups.
214.337 On-track safety procedures for lone workers.
214.339 Audible warning from trains.
214.341 Roadway maintenance machines.
214.343 Training and qualification, general.
214.345 Training for all roadway workers.
214.347 Training and qualification for lone workers.
214.349 Training and qualification of watchmen/lookouts.
214.351 Training and qualification of flagmen.
214.353 Training and qualification of roadway workers who provide on-track safety for roadway work groups.
214.355 Training and qualification in on-track safety for operators of roadway maintenance machines.
APPENDIX A TO PART 214—SCHEDULE OF CIVIL PENALTIES

AUTHORITY: 49 U.S.C. Chs. 210–213; 49 CFR 1.49.

SOURCE: 57 FR 28127, June 24, 1992, unless otherwise noted.

Subpart A—General

§ 214.1 Purpose and scope.

(a) The purpose of this part is to prevent accidents and casualties to employees involved in certain railroad inspection, maintenance and construction activities.

(b) This part prescribes minimum Federal safety standards for the railroad workplace safety subjects addressed herein. This part does not restrict a railroad or railroad contractor from adopting and enforcing additional or more stringent requirements not inconsistent with this part.

§ 214.3 Application.

This part applies to railroads that operate rolling equipment on track that is part of the general railroad system of transportation.

§ 214.4 Preemptive effect.

Under 49 U.S.C. 20106 (formerly section 205 of the Federal Railroad Safety Act of 1970 (45 U.S.C. 434)), issuance of the regulations in this part preempts any State law, rule, regulation, order, or standard covering the same subject matter, except a provision directed at an essentially local safety hazard that is not incompatible with this part and that does not unreasonably burden on interstate commerce.

[61 FR 65975, Dec. 16, 1996]

§ 214.5 Responsibility for compliance.

Any person (including a railroad and any manager, supervisor, official, or other employee or agent of a railroad or railroad contractor) who violates any requirement of this part or causes the violation of any such requirement is subject to a civil penalty of at least $250 and not more than $10,000 per violation, except that penalties may be assessed against individuals only for willful violations, and where a grossly negligent violation or a pattern of repeated violations has created an imminent hazard of death or injury, or has caused death or injury, a penalty not to exceed $20,000 per violation may be assessed. See appendix A to this part for a statement of agency civil penalty policy.

§ 214.7 Definitions.

Adjacent tracks mean two or more tracks with track centers spaced less than 25 feet apart.

Anchorage means a secure point of attachment for lifelines, lanyards or deceleration devices that is independent of the means of supporting or suspending the employee.

Body belt means a strap that can be secured around the waist or body and attached to a lanyard, lifeline, or deceleration device.

Body harness means a device with straps that is secured about the employee in a manner so as to distribute the fall arrest forces over (at least) the thighs, shoulders, pelvis, waist, and chest and that can be attached to a lanyard, lifeline, or deceleration device.

Class I, Class II, and Class III have the meaning assigned by, Title 49 Code of Federal Regulations part 1201, General Instructions 1–1.

Competent person means one who is capable of identifying existing and predictable hazards in the workplace and

who is authorized to take prompt corrective measures to eliminate them.

Control operator means the railroad employee in charge of a remotely controlled switch or derail, an interlocking, or a controlled point, or a segment of controlled track.

Controlled track means track upon which the railroad's operating rules require that all movements of trains must be authorized by a train dispatcher or a control operator.

Deceleration device means any mechanism, including, but not limited to, rope grabs, ripstitch lanyards, specially woven lanyards, tearing or deforming lanyards, and automatic self-retracting lifelines/lanyards that serve to dissipate a substantial amount of energy during a fall arrest, or otherwise limit the energy on an employee during fall arrest.

Definite train location means a system for establishing on-track safety by providing roadway workers with information about the earliest possible time that approaching trains may pass specific locations as prescribed in § 214.331 of this part.

Effective securing device when used in relation to a manually operated switch or derail means one which is:

(a) Vandal resistant;

(b) Tamper resistant; and

(c) Designed to be applied, secured, uniquely tagged and removed only by the class, craft or group of employees for whom the protection is being provided.

Employee means an individual who is engaged or compensated by a railroad or by a contractor to a railroad to perform any of the duties defined in this part.

Employer means a railroad, or a contractor to a railroad, that directly engages or compensates individuals to perform any of the duties defined in this part.

Equivalent means alternative designs, materials, or methods that the railroad or railroad contractor can demonstrate will provide equal or greater safety for employees than the means specified in this part.

Exclusive track occupancy means a method of establishing working limits on controlled track in which movement authority of trains and other equipment is withheld by the train dispatcher or control operator, or restricted by flagmen, as prescribed in § 214.321 of this part.

Flagman when used in relation to roadway worker safety means an employee designated by the railroad to direct or restrict the movement of trains past a point on a track to provide on-track safety for roadway workers, while engaged solely in performing that function.

Foul time is a method of establishing working limits on controlled track in which a roadway worker is notified by the train dispatcher or control operator that no trains will operate within a specific segment of controlled track until the roadway worker reports clear of the track, as prescribed in § 214.323 of this part.

Fouling a track means the placement of an individual or an item of equipment in such proximity to a track that the individual or equipment could be struck by a moving train or on-track equipment, or in any case is within four feet of the field side of the near running rail.

Free fall means the act of falling before the personal fall arrest system begins to apply force to arrest the fall.

Free fall distance means the vertical displacement of the fall arrest attachment point on the employee's body belt or body harness between onset of the fall and the point at which the system begins to apply force to arrest the fall. This distance excludes deceleration distance and lifeline and lanyard elongation, but includes any deceleration device slide distance or self-retracting lifeline/lanyard extension before they operate and fall arrest forces occur.

Inaccessible track means a method of establishing working limits on non-controlled track by physically preventing entry and movement of trains and equipment.

Individual train detection means a procedure by which a lone worker acquires on-track safety by seeing approaching trains and leaving the track before they arrive and which may be used only under circumstances strictly defined in this part.

Informational line-up of trains means information provided in a prescribed format to a roadway worker by the

train dispatcher regarding movements of trains authorized or expected on a specific segment of track during a specific period of time.

Lanyard means a flexible line of rope, wire rope, or strap that is used to secure a body belt or body harness to a deceleration device, lifeline, or anchorage.

Lifeline means a component of a fall arrest system consisting of a flexible line that connects to an anchorage at one end to hang vertically (vertical lifeline) or to an anchorage at both ends to stretch horizontally (horizontal lifeline), and that serves as a means for connecting other components of a personal fall arrest system to the anchorage.

Lone worker means an individual roadway worker who is not being afforded on-track safety by another roadway worker, who is not a member of a roadway work group, and who is not engaged in a common task with another roadway worker.

Non-controlled track means track upon which trains are permitted by railroad rule or special instruction to move without receiving authorization from a train dispatcher or control operator.

On-track safety means a state of freedom from the danger of being struck by a moving railroad train or other railroad equipment, provided by operating and safety rules that govern track occupancy by personnel, trains and on-track equipment.

Personal fall arrrest system means a system used to arrest the fall of an employee from a working level. It consists of an anchorage, connectors, body harness or body belt, lanyard, deceleration device, lifeline, or combination of these.

Qualified means a status attained by an employee who has successfully completed any required training for, has demonstrated proficiency in, and has been authorized by the employer to perform the duties of a particular position or function.

Railroad means all forms of non-highway ground transportation that run on rails or electro-magnetic guideways, including (1) commuter or other short-haul rail passenger service in a metropolitan or suburban area, and (2) high-speed ground transportation systems that connect metropolitan areas, without regard to whether they use new technologies not associated with traditional railroads. Such term does not include rapid transit operations within an urban area that are not connected to the general railroad system of transportation.

Railroad bridge means a structure supporting one or more railroad tracks above land or water with a span length of 12 feet or more measured along the track centerline. This term applies to the entire structure between the faces of the backwalls of abutments or equivalent components, regardless of the number of spans, and includes all such structures, whether of timber, stone, concrete, metal, or any combination thereof.

Railroad bridge worker or bridge worker means any employee of, or employee of a contractor of, a railroad owning or responsible for the construction, inspection, testing, or maintenance of a bridge whose assigned duties, if performed on the bridge, include inspection, testing, maintenance, repair, construction, or reconstruction of the track, bridge structural members, operating mechanisms and water traffic control systems, or signal, communication, or train control systems integral to that bridge.

Restricted speed means a speed that will permit a train or other equipment to stop within one-half the range of vision of the person operating the train or other equipment, but not exceeding 20 miles per hour, unless further restricted by the operating rules of the railroad.

Roadway maintenance machine means a device powered by any means of energy other than hand power which is being used on or near railroad track for maintenance, repair, construction or inspection of track, bridges, roadway, signal, communications, or electric traction systems. Roadway maintenance machines may have road or rail wheels or may be stationary.

Roadway work group means two or more roadway workers organized to work together on a common task.

Roadway worker means any employee of a railroad, or of a contractor to a

railroad, whose duties include inspection, construction, maintenance or repair of railroad track, bridges, roadway, signal and communication systems, electric traction systems, roadway facilities or roadway maintenance machinery on or near track or with the potential of fouling a track, and flagmen and watchmen/lookouts as defined in this section.

Self-retracting lifeline/lanyard means a deceleration device that contains a drum-wound line that may be slowly extracted from, or retracted onto, the drum under slight tension during normal employee movement, and which, after onset of a fall, automatically locks the drum and arrests the fall.

Snap-hook means a connector comprised of a hook-shaped member with a normally closed keeper, that may be opened to permit the hook to receive an object and, when released, automatically closes to retain the object.

Train approach warning means a method of establishing on-track safety by warning roadway workers of the approach of trains in ample time for them to move to or remain in a place of safety in accordance with the requirements of this part.

Train coordination means a method of establishing working limits on track upon which a train holds exclusive authority to move whereby the crew of that train yields that authority to a roadway worker.

Train dispatcher means the railroad employee assigned to control and issue orders governing the movement of trains on a specific segment of railroad track in accordance with the operating rules of the railroad that apply to that segment of track.

Watchman/lookout means an employee who has been annually trained and qualified to provide warning to roadway workers of approaching trains or on-track equipment. Watchmen/lookouts shall be properly equipped to provide visual and auditory warning such as whistle, air horn, white disk, red flag, lantern, fusee. A watchman/lookout's sole duty is to look out for approaching trains/on-track equipment and provide at least fifteen seconds advanced warning to employees before arrival of trains/on-track equipment.

Working limits means a segment of track with definite boundaries established in accordance with this part upon which trains and engines may move only as authorized by the roadway worker having control over that defined segment of track. Working limits may be established through ''exclusive track occupancy,'' ''inaccessible track,'' ''foul time'' or ''train coordination'' as defined herein.

[57 FR 28127, June 24, 1992, as amended at 61 FR 65975, Dec. 16, 1996]

Subpart B—Bridge Worker Safety Standards

§ 214.101 Purpose and scope.

(a) The purpose of this subpart is to prevent accidents and casualties arising from the performance of work on railroad bridges.

(b) This subpart prescribes minimum railroad safety rules for railroad employees performing work on bridges. Each railroad and railroad contractor may prescribe additional or more stringent operating rules, safety rules, and other special instructions not inconsistent with this subpart.

(c) These provisions apply to all railroad employees, railroads, and railroad contractors performing work on railroad bridges.

(d) Any working conditions involving the protection of railroad employees working on railroad bridges not within the subject matter addressed by this chapter, including respiratory protection, hazard communication, hearing protection, welding and lead exposure standards, shall be governed by the regulations of the U.S. Department of Labor, Occupational Safety and Health Administration.

§ 214.103 Fall protection, generally.

(a) Except as provided in paragraphs (b) through (d) of this section, when employees work twelve feet or more above the ground or water surface, they shall be provided and shall use a personal fall arrest system or safety net system. All fall protection systems required by this section shall conform to the standards set forth in § 214.105 of this subpart.

(b)(1) This section shall not apply if the installation of the fall arrest system poses a greater exposure to risk than the work to be performed. In any action brought by FRA to enforce the fall protection requirements, the railroad or railroad contractor shall have the burden of proving that the installation of such device poses greater exposure to risk than performance of the work itself.

(2) This section shall not apply to employees engaged in inspection of railroad bridges conducted in full compliance with the following conditions:

(i) The railroad or railroad contractor has a written program in place that requires training in, adherence to, and use of safe procedures associated with climbing techniques and procedures to be used;

(ii) The employee to whom this exception applies has been trained and qualified according to that program to perform bridge inspections, has been previously and voluntarily designated to perform inspections under the provisions of that program, and has accepted the designation;

(iii) The employee to whom this exception applies is familiar with the appropriate climbing techniques associated with all bridge structures the employee is responsible for inspecting;

(iv) The employee to whom this exception applies is engaged solely in moving on or about the bridge or observing, measuring, and recording the dimensions and condition of the bridge and its components; and

(v) The employee to whom this exception applies is provided all equipment necessary to meet the needs of safety, including any specialized or alternative systems required.

(c) This section shall not apply where employees are working on a railroad bridge equipped with walkways and railings of sufficient height, width, and strength to prevent a fall, provided that the employee does not work beyond the railings, over the side of the bridge, on ladders or other elevation devices, or where gaps or holes exist through which a body could fall. Where used in place of fall protection as provided for in § 214.105, this paragraph (c) is satisfied by:

(1) Walkways and railings meeting the standards set forth in the American Railway Engineering Association's Manual for Railway Engineering; and

(2) Roadways attached to railroad bridges, provided that employees on the roadway deck work or move at a distance of six feet or more from the edge of the roadway deck, or from an opening through which a person could fall.

(d) This section shall not apply where employees are performing repairs or inspections of a minor nature that are completed by working exclusively between the outside rails, including, but not limited to, routine welding, spiking, anchoring, spot surfacing, and joint bolt replacement.

[57 FR 28127, June 24, 1992, as amended at 59 FR 30883, June 16, 1994]

§ 214.105 Fall protection systems standards and practices.

(a) *General requirements.* All fall protection systems required by this subpart shall conform to the following:

(1) Fall protection systems shall be used only for employee fall protection.

(2) Any fall protection system subjected to impact loading shall be immediately and permanently removed from service unless fully inspected and determined by a competent person to be undamaged and suitable for reuse.

(3) All fall protection system components shall be protected from abrasions, corrosion, or any other form of deterioration.

(4) All fall protection system components shall be inspected prior to each use for wear, damage, corrosion, mildew, and other deterioration. Defective components shall be permanently removed from service.

(5) Prior to use and after any component or system is changed, employees shall be trained in the application limits of the equipment, proper hook-up, anchoring and tie-off techniques, methods of use, and proper methods of equipment inspection and storage.

(6) The railroad or railroad contractor shall provide for prompt rescue of employees in the event of a fall.

(7) Connectors shall have a corrosion-resistant finish, and all surfaces and

edges shall be smooth to prevent damage to interfacing parts of the system.

(8) Connectors shall be drop forged, pressed or formed steel, or made of equivalent-strength materials.

(9) Anchorages, including single- and double-head anchors, shall be capable of supporting at least 5,000 pounds per employee attached, or shall be designed, installed, and used under the supervision of a qualified person as part of a complete personal fall protection system that maintains a safety factor of at least two.

(b) *Personal fall arrest systems.* All components of a personal fall arrest system shall conform to the following standards:

(1) Lanyards and vertical lifelines that tie off one employee shall have a minimum breaking strength of 5,000 pounds.

(2) Self-retracting lifelines and lanyards that automatically limit free fall distance to two feet or less shall have components capable of sustaining a minimum static tensile load of 3,000 pounds applied to the device with the lifeline or lanyard in the fully extended position.

(3) Self-retracting lifelines and lanyards that do not limit free fall distance to two feet or less, ripstitch, and tearing and deformed lanyards shall be capable of withstanding 5,000 pounds applied to the device with the lifeline or lanyard in the fully extended position.

(4) Horizontal lifelines shall be designed, installed, and used under the supervision of a competent person, as part of a complete personal fall arrest system that maintains a safety factor of at least two.

(5) Lifelines shall not be made of natural fiber rope.

(6) The personal fall arrest system shall limit the maximum arresting force on an employee to 900 pounds when used with a body belt.

(7) The personal fall arrest system shall limit the maximum arresting force on an employee to 1,800 pounds when used with a body harness.

(8) The personal fall arrest system shall bring an employee to a complete stop and limit maximum deceleration distance an employee travels to 3.5 feet.

(9) The personal fall arrest system shall have sufficient strength to withstand twice the potential impact energy of an employee free falling a distance of six feet, or the free fall distance permitted by the system, whichever is less.

(10) The personal fall arrest system shall be arranged so that an employee cannot free fall more than six feet and cannot contact the ground or any lower horizontal surface of the bridge.

(11) Personal fall arrest systems shall be worn with the attachment point of the body belt located in the center of the wearer's back, and the attachment point of the body harness located in the center of the wearer's back near shoulder level, or above the wearer's head.

(12) When vertical lifelines are used, each employee shall be provided with a separate lifeline.

(13) Devices used to connect to a horizontal lifeline that may become a vertical lifeline shall be capable of locking in either direction.

(14) Dee-rings and snap-hooks shall be capable of sustaining a minimum tensile load of 3,600 pounds without cracking, breaking, or taking permanent deformation.

(15) Dee-rings and snap-hooks shall be capable of sustaining a minimum tensile load of 5,000 pounds.

(16) Snap-hooks shall not be connected to each other.

(17) Snap-hooks shall be dimensionally compatible with the member to which they are connected to prevent unintentional disengagement, or shall be a locking snap-hook designed to prevent unintentional disengagement.

(18) Unless of a locking type, snap-hooks shall not be engaged:

(i) Directly next to webbing, rope, or wire rope;

(ii) To each other;

(iii) To a dee-ring to which another snap-hook or other connector is attached;

(iv) To a horizontal lifeline; or

(v) To any object that is incompatibly shaped or dimensioned in relation to the snap-hook so that unintentional disengagement could occur.

(c) *Safety net systems.* Use of safety net systems shall conform to the following standards and practices:

(1) Safety nets shall be installed as close as practicable under the walking/working surface on which employees are working, but shall not be installed more than 30 feet below such surface.

(2) If the distance from the working surface to the net exceeds 30 feet, employees shall be protected by personal fall arrest systems.

(3) The safety net shall be installed such that any fall from the working surface to the net is unobstructed.

(4) Except as provided in this subsection, safety nets and net installations shall be drop-tested at the jobsite after initial installation and before being used as a fall protection system, whenever relocated, after major repair, and at six-month intervals if left in one place. The drop-test shall consist of a 400-pound bag of sand 30 inches, plus or minus two inches, in diameter dropped into the net from the highest (but not less than 3½ feet) working surface on which employees are to be protected.

(i) When the railroad or railroad contractor demonstrates that a drop-test is not feasible and, as a result, the test is not performed, the railroad or railroad contractor, or designated competent person, shall certify that the net and its installation are in compliance with the provisions of this section by preparing a certification record prior to use of the net.

(ii) The certification shall include an identification of the net, the date it was determined that the net was in compliance with this section, and the signature of the person making this determination. Such person's signature shall certify that the net and its installation are in compliance with this section. The most recent certification for each net installation shall be available at the jobsite where the subject net is located.

(5) Safety nets and their installations shall be capable of absorbing an impact force equal to that produced by the drop test specified in this section.

(6) The safety net shall be installed such that there is no contact with surfaces or structures below the net when subjected to an impact force equal to the drop test specified in this section.

(7) Safety nets shall extend outward from the outermost projection of the work surface as follows:

(i) When the vertical distance from the working level to the horizontal plane of the net is 5 feet or less, the minimum required horizontal distance of the outer edge of the net beyond the edge of the working surface is 8 feet.

(ii) When the vertical distance from the working level to the horizontal plane of the net is more than 5 feet, but less than 10 feet, the minimum required horizontal distance of the outer edge of the net beyond the edge of the working surface is 10 feet.

(iii) When the vertical distance from the working level to the horizontal plane of the net is more than 10 feet, the minimum required horizontal distance of the outer edge of the net beyond the edge of the working surface is 13 feet.

(8) Defective nets shall not be used. Safety nets shall be inspected at least once a week for mildew, wear, damage, and other deterioration. Defective components shall be removed permanently from service.

(9) Safety nets shall be inspected after any occurrence that could affect the integrity of the safety net system.

(10) Tools, scraps, or other materials that have fallen into the safety net shall be removed as soon as possible, and at least before the next work shift.

(11) Each safety net shall have a border rope for webbing with a minimum breaking strength of 5,000 pounds.

(12) The maximum size of each safety net mesh opening shall not exceed 36 square inches and shall not be longer than 6 inches on any side measured center-to-center of mesh ropes or webbing. All mesh crossing shall be secured to prevent enlargement of the mesh opening.

(13) Connections between safety net panels shall be as strong as integral net components and shall be spaced not more than 6 inches apart.

§ 214.107 Working over or adjacent to water.

(a) Employees working over or adjacent to water with a depth of four feet or more, or where the danger of drowning exists, shall be provided and shall use life vests or buoyant work vests in compliance with U.S. Coast Guard requirements in 46 CFR 160.047, 160.052,

and 160.053. Life preservers in compliance with U.S. Coast Guard requirements in 46 CFR 160.055 shall also be within ready access. This section shall not apply to employees using personal fall arrest systems or safety nets that comply with this subpart.

(b) Life vests or bouyant work vests shall not be required when employees are conducting inspections that involve climbing structures above or below the bridge deck.

(c) Prior to each use, all flotation devices shall be inspected for defects that reduce their strength or bouyancy by designated individuals trained by the railroad or railroad contractor. Defective units shall not be used.

(d) Where life vests are required by paragraph (a) of this section, ring buoys with at least 90 feet of line shall be provided and readily available for emergency rescue operations. Distance between ring buoys shall not exceed 200 feet.

(e) Where life vests are required, at least one lifesaving skiff, inflatable boat, or equivalent device shall be immediately available. If it is determined by a competent person that environmental conditions, including weather, water speed, and terrain, merit additional protection, the skiff or boat shall be manned.

§ 214.109 Scaffolding.

(a) Scaffolding used in connection with railroad bridge maintenance, inspection, testing, and construction shall be constructed and maintained in a safe condition and meet the following minimum requirements:

(1) Each scaffold and scaffold component, except suspension ropes and guardrail systems, but including footings and anchorage, shall be capable of supporting, without failure, its own weight and at least four times the maximum intended load applied or transmitted to that scaffold or scaffold component.

(2) Guardrail systems shall be capable of withstanding, without failure, a force of at least 200 pounds applied within two inches of the top edge, in any outward or downward direction, at any point along the top edge.

(3) Top edge height of toprails, or equivalent guardrail system member, shall be 42 inches, plus or minus three inches. Supports shall be at intervals not to exceed eight feet. Toeboards shall be a minimum of four inches in height.

(4) Midrails, screens, mesh, intermediate vertical members, solid panels, and equivalent structural members shall be capable of withstanding, without failure, a force of at least 150 pounds applied in any downward or outward direction at any point along the midrail or other member.

(5) Midrails shall be installed at a height midway between the top edge of the guardrail system and the walking/working level.

(b) Scaffolds shall not be altered or moved while they are occupied. This paragraph does not apply to vertical movements of mobile scaffolds that are designed to move vertically while occupied.

(c) An access ladder or equivalent safe access shall be provided.

(d) All exposed surfaces shall be prepared and cleared to prevent injury due to laceration, puncture, tripping, or falling hazard.

(e) All scaffold design, construction, and repair shall be completed by competent individuals trained and knowledgeable about design criteria, intended use, structural limitations, and procedures for proper repair.

(f) Manually propelled mobile ladder stands and scaffolds shall conform to the following:

(1) All manually propelled mobile ladder stands and scaffolds shall be capable of carrying the design load.

(2) All ladder stands, scaffolds, and scaffold components shall be capable of supporting, without failure, displacement, or settlement, its own weight and at least four times the maximum intended load applied or transmitted to that ladder stand, scaffold, or scaffold component.

(3) All exposed surfaces shall be free from sharp edges or burrs.

(4) The maximum work level height shall not exceed four times the minimum or least base dimensions of any mobile ladder stand or scaffold. Where the basic mobile unit does not meet this requirement, suitable outrigger frames shall be employed to achieve

this least base dimension, or equivalent provisions shall be made to guy or brace the unit against tipping.

(5) The minimum platform width for any work level shall not be less than 20 inches for mobile scaffolds (towers). Ladder stands shall have a minimum step width of 16 inches. The steps of ladder stands shall be fabricated from slip resistant treads.

(6) Guardrails and midrails shall conform to the requirements listed in paragraph (a) of this section.

(7) A climbing ladder or stairway shall be provided for proper access and egress, and shall be affixed or built into the scaffold and so located that in its use it will not have a tendency to tip the scaffold.

(8) Wheels or casters shall be capable of supporting, without failure, at least four times the maximum intended load applied or transmitted to that component. All scaffold casters shall be provided with a positive wheel and/or swivel lock to prevent movement. Ladder stands shall have at least two of the four casters and shall be of the swivel type.

§ 214.111 Personal protective equipment, generally.

With the exception of foot protection, the railroad or railroad contractor shall provide and the employee shall use all appropriate personal protective equipment described in this subpart in all operations where there is exposure to hazardous conditions, or where this subpart indicates the need for using such equipment to reduce hazards to railroad employees. The railroad or railroad contractor shall require the use of foot protection when the potential for foot injury exists.

[59 FR 30883, June 16, 1994]

§ 214.113 Head protection.

(a) Railroad employees working in areas where there is a possible danger of head injury from impact, or from falling or flying objects, or from electrical shock and burns, shall be provided and shall wear protective helmets.

(b) Helmets for the protection of railroad employees against impact and penetration of falling and flying objects, or from high voltage electrical shock and burns shall conform to the national consensus standards for industrial head protection (American National Standards Institute, American National Standard Z89.1–1986, Protective Headwear for Industrial Workers). This incorporation by reference was approved by the Director of the Federal Register in accordance with 5 U.S.C. 552(a) and 1 CFR part 51. Copies may be obtained from the American National Standards Institute, 11 West 42nd Street, New York, NY 10036. Copies may be inspected at the Federal Railroad Administration, Docket Clerk, 400 7th Street, SW., Washington, DC, or at the Office of the Federal Register, 800 North Capitol Street, NW., suite 700, Washington, DC.

[57 FR 28127, June 24, 1992, as amended at 59 FR 30883, June 16, 1994]

§ 214.115 Foot protection.

(a) The railroad or railroad contractor shall require railroad employees to wear foot protection equipment when potential foot injury may result from impact, falling or flying objects, electrical shock or burns, or other hazardous condition.

(b) Safety-toe footwear for railroad employees shall conform to the national consensus standards for safety-toe footwear (American National Standards Institute, American National Standard Z41–1991, Standard for Personal Protection—Protective Footwear). This incorporation by reference was approved by the Director of the Federal Register in accordance with 5 U.S.C. 552(a) and 1 CFR part 51. Copies may be obtained from the American National Standards Institute, 11 West 42nd Street, New York, NY 10036. Copies may be inspected at the Federal Railroad Administration, Docket Clerk, 400 7th Street, SW., Washington, DC, or at the Office of the Federal Register, 800 North Capitol Street, NW., suite 700, Washington, DC.

[57 FR 28127, June 24, 1992, as amended at 59 FR 30883, June 16, 1994]

§ 214.117 Eye and face protection.

(a) Railroad employees shall be provided and shall wear eye and face protection equipment when potential eye

or face injury may result from physical, chemical, or radiant agents.

(b) Eye and face protection equipment required by this section shall conform to the national consensus standards for occupational and educational eye and face protection (American National Standards Institute, American National Standard Z87.1–1989, Practice for Occupational and Educational Eye and Face Protection). This incorporation by reference was approved by the Director of the Federal Register in accordance with 5 U.S.C. 552(a) and 1 CFR part 51. Copies may be obtained from the American National Standards Institute, 11 West 42nd Street, New York, NY 10036. Copies may be inspected at the Federal Railroad Administration, Docket Clerk, 400 7th Street, SW., Washington, DC, or at the Office of the Federal Register, 800 North Capitol Street, NW., suite 700, Washington, DC.

(c) Face and eye protection equipment required by this section shall be kept clean and in good repair. Use of equipment with structural or optical defects is prohibited.

(d) Railroad employees whose vision requires the use of corrective lenses, when required by this regulation to wear eye protection, shall be protected by goggles or spectacles of one of the following types:

(i) Spectacles whose protective lenses provide optical correction the frame of which includes shielding against objects reaching the wearer's eyes around the lenses;

(ii) Goggles that can be worn over corrective lenses without disturbing the adjustment of the lenses; or

(iii) Goggles that incorporate corrective lenses mounted behind the protective lenses.

[57 FR 28127, June 24, 1992, as amended at 59 FR 30884, June 16, 1994]

Subpart C—Roadway Worker Protection

SOURCE: 61 FR 65976, Dec. 16, 1996, unless otherwise noted.

§ 214.301 Purpose and scope.

(a) The purpose of this subpart is to prevent accidents and casualties caused by moving railroad cars, locomotives or roadway maintenance machines striking roadway workers or roadway maintenance machines.

(b) This subpart prescribes minimum safety standards for roadway workers. Each railroad and railroad contractor may prescribe additional or more stringent operating rules, safety rules, and other special instructions that are consistent with this subpart.

(c) This subpart prescribes safety standards related to the movement of roadway maintenance machines where such movements affect the safety of roadway workers. This subpart does not otherwise affect movements of roadway maintenance machines that are conducted under the authority of a train dispatcher, a control operator, or the operating rules of the railroad.

§ 214.302 Information and collection requirements.

(a) The information collection requirements of this part were reviewed by the Office of Management and Budget pursuant to the Paperwork Reduction Act of 1995, Public Law 104–13, § 2, 109 Stat.163 (1995) (codified as revised at 44 U.S.C. §§ 3501–3520), and are assigned OMB control number 2130–0539. FRA may not conduct or sponsor and a respondent is not required to respond to, a collection of information unless it displays a currently valid OMB control number.

(b) The information collection requirements are found in the following sections: §§ 214.303, 214.307, 214.309, 214.311, 214.313, 214.315, 214.319, 214.321, 214.323, 214.325, 214.327, 214.329, 214.331, 214.335, 214.341.

§ 214.303 Railroad on-track safety programs, generally.

(a) Each railroad to which this part applies shall adopt and implement a program that will afford on-track safety to all roadway workers whose duties are performed on that railroad. Each such program shall provide for the levels of protection specified in this subpart.

(b) Each on-track safety program adopted to comply with this part shall include procedures to be used by each railroad for monitoring effectiveness of and compliance with the program.

§ 214.305 Compliance dates.

Each program adopted by a railroad shall comply not later than the date specified in the following schedule:

(a) For each Class I railroad (including National Railroad Passenger Corporation) and each railroad providing commuter service in a metropolitan or suburban area, March 15, 1997.

(b) For each Class II railroad, April 15, 1997.

(c) For each Class III railroad, switching and terminal railroad, and any railroad not otherwise classified, May 15, 1997.

(d) For each railroad commencing operations after the pertinent date specified in this section, the date on which operations commence.

§ 214.307 Review and approval of individual on-track safety programs by FRA.

(a) Each railroad shall notify, in writing, the Associate Administrator for Safety, Federal Railroad Administration, RRS–15, 400 Seventh Street SW, Washington, DC 20590, not less than one month before its on-track safety program becomes effective. The notification shall include the effective date of the program, the address of the office at which the program documents are available for review and photocopying by representatives of the Federal Railroad Administrator, and the name, title, address and telephone number of the primary person to be contacted with regard to review of the program. This notification procedure shall also apply to subsequent changes to a railroad's on-track safety program.

(b) After receipt of the notification from the railroad, the Federal Railroad Administration will conduct a formal review of the on-track safety program. The Federal Railroad Administration will notify the primary railroad contact person of the results of the review, in writing, whether the on-track safety program or changes to the program have been approved by the Administrator, and if not approved, the specific points in which the program or changes are deficient.

(c) A railroad's on-track safety program will take effect by the established compliance dates in § 214.305, without regard to the date of review or approval by the Federal Railroad Administration. Changes to a railroad's program will take effect on dates established by each railroad without regard to the date of review and approval by the Federal Railroad Administration.

§ 214.309 On-track safety program documents.

Rules and operating procedures governing track occupancy and protection shall be maintained together in one manual and be readily available to all roadway workers. Each roadway worker responsible for the on-track safety of others, and each lone worker, shall be provided with and shall maintain a copy of the program document.

§ 214.311 Responsibility of employers.

(a) Each employer is responsible for the understanding and compliance by its employees with its rules and the requirements of this part.

(b) Each employer shall guarantee each employee the absolute right to challenge in good faith whether the on-track safety procedures to be applied at the job location comply with the rules of the operating railroad, and to remain clear of the track until the challenge is resolved.

(c) Each employer shall have in place a written procedure to achieve prompt and equitable resolution of challenges made in accordance with §§ 214.311(b) and 214.313(d).

§ 214.313 Responsibility of individual roadway workers.

(a) Each roadway worker is responsible for following the on-track safety rules of the railroad upon which the roadway worker is located.

(b) A roadway worker shall not foul a track except when necessary for the performance of duty.

(c) Each roadway worker is responsible to ascertain that on-track safety is being provided before fouling a track.

(d) Each roadway worker may refuse any directive to violate an on-track safety rule, and shall inform the employer in accordance with § 214.311 whenever the roadway worker makes a good faith determination that on-track

safety provisions to be applied at the job location do not comply with the rules of the operating railroad.

§ 214.315 Supervision and communication.

(a) When an employer assigns duties to a roadway worker that call for that employee to foul a track, the employer shall provide the employee with a job briefing that includes information on the means by which on-track safety is to be provided, and instruction on the on-track safety procedures to be followed.

(b) A job briefing for on-track safety shall be deemed complete only after the roadway worker has acknowledged understanding of the on-track safety procedures and instructions presented.

(c) Every roadway work group whose duties require fouling a track shall have one roadway worker designated by the employer to provide on-track safety for all members of the group. The designated person shall be qualified under the rules of the railroad that conducts train operations on those tracks to provide the protection necessary for on-track safety of each individual in the group. The responsible person may be designated generally, or specifically for a particular work situation.

(d) Before any member of a roadway work group fouls a track, the designated person providing on-track safety for the group under paragraph (c) of this section shall inform each roadway worker of the on- track safety procedures to be used and followed during the performance of the work at that time and location. Each roadway worker shall again be so informed at any time the on-track safety procedures change during the work period. Such information shall be given to all roadway workers affected before the change is effective, except in cases of emergency. Any roadway workers who, because of an emergency, cannot be notified in advance shall be immediately warned to leave the fouling space and shall not return to the fouling space until on-track safety is re-established.

(e) Each lone worker shall communicate at the beginning of each duty period with a supervisor or another designated employee to receive a job briefing and to advise of his or her planned itinerary and the procedures that he or she intends to use for on-track safety. When communication channels are disabled, the job briefing shall be conducted as soon as possible after the beginning of the work period when communications are restored.

§ 214.317 On-track safety procedures, generally.

Each employer subject to the provisions of this part shall provide on-track safety for roadway workers by adopting a program that contains specific rules for protecting roadway workers that comply with the provisions of §§ 214.319 through 214.337 of this part.

§ 214.319 Working limits, generally.

Working limits established on controlled track shall conform to the provisions of § 214.321 Exclusive track occupancy, or § 214.323 Foul time, or § 214.325 Train coordination. Working limits established on non-controlled track shall conform to the provision of § 214.327 Inaccessible track. Working limits established under any procedure shall, in addition, conform to the following provisions:

(a) Only a roadway worker who is qualified in accordance with § 214.353 of this part shall establish or have control over working limits for the purpose of establishing on-track safety.

(b) Only one roadway worker shall have control over working limits on any one segment of track.

(c) All affected roadway workers shall be notified before working limits are released for the operation of trains. Working limits shall not be released until all affected roadway workers have either left the track or have been afforded on-track safety through train approach warning in accordance with § 214.329 of this subpart.

§ 214.321 Exclusive track occupancy.

Working limits established on controlled track through the use of exclusive track occupancy procedures shall comply with the following requirements:

(a) The track within working limits shall be placed under the control of one roadway worker by either:

(1) Authority issued to the roadway worker in charge by the train dispatcher or control operator who controls train movements on that track,

(2) Flagmen stationed at each entrance to the track within working limits and instructed by the roadway worker in charge to permit the movement of trains and equipment into the working limits only as permitted by the roadway worker in charge, or

(3) The roadway worker in charge causing fixed signals at each entrance to the working limits to display an aspect indicating ''Stop.''

(b) An authority for exclusive track occupancy given to the roadway worker in charge of the working limits shall be transmitted on a written or printed document directly, by relay through a designated employee, in a data transmission, or by oral communication, to the roadway worker by the train dispatcher or control operator in charge of the track.

(1) Where authority for exclusive track occupancy is transmitted orally, the authority shall be written as received by the roadway worker in charge and repeated to the issuing employee for verification.

(2) The roadway worker in charge of the working limits shall maintain possession of the written or printed authority for exclusive track occupancy while the authority for the working limits is in effect.

(3) The train dispatcher or control operator in charge of the track shall make a written or electronic record of all authorities issued to establish exclusive track occupancy.

(c) The extent of working limits established through exclusive track occupancy shall be defined by one of the following physical features clearly identifiable to a locomotive engineer or other person operating a train or railroad equipment:

(1) A flagman with instructions and capability to hold all trains and equipment clear of the working limits;

(2) A fixed signal that displays an aspect indicating ''Stop'';

(3) A station shown in the time-table, and identified by name with a sign, beyond which train movement is prohibited by train movement authority or the provisions of a direct train control system.

(4) A clearly identifiable milepost sign beyond which train movement is prohibited by train movement authority or the provisions of a direct train control system; or

(5) A clearly identifiable physical location prescribed by the operating rules of the railroad that trains may not pass without proper authority.

(d) Movements of trains and roadway maintenance machines within working limits established through exclusive track occupancy shall be made only under the direction of the roadway worker having control over the working limits. Such movements shall be restricted speed unless a higher speed has been specifically authorized by the roadway worker in charge of the working limits.

§ 214.323 Foul time.

Working limits established on controlled track through the use of foul time procedures shall comply with the following requirements:

(a) Foul time may be given orally or in writing by the train dispatcher or control operator only after that employee has withheld the authority of all trains to move into or within the working limits during the foul time period.

(b) Each roadway worker to whom foul time is transmitted orally shall repeat the track number, track limits and time limits of the foul time to the issuing employee for verification before the foul time becomes effective.

(c) The train dispatcher or control operator shall not permit the movement of trains or other on-track equipment onto the working limits protected by foul time until the roadway worker who obtained the foul time has reported clear of the track.

§ 214.325 Train coordination.

Working limits established by a roadway worker through the use of train coordination shall comply with the following requirements:

(a) Working limits established by train coordination shall be within the segments of track or tracks upon which only one train holds exclusive authority to move.

(b) The roadway worker who establishes working limits by train coordination shall communicate with a member of the crew of the train holding the exclusive authority to move, and shall determine that:

(1) The train is visible to the roadway worker who is establishing the working limits,

(2) The train is stopped,

(3) Further movements of the train will be made only as permitted by the roadway worker in charge of the working limits while the working limits remain in effect, and

(4) The crew of the train will not give up its exclusive authority to move until the working limits have been released to the train crew by the roadway worker in charge of the working limits.

§ 214.327 Inaccessible track.

(a) Working limits on non-controlled track shall be established by rendering the track within working limits physically inaccessible to trains at each possible point of entry by one of the following features:

(1) A flagman with instructions and capability to hold all trains and equipment clear of the working limits;

(2) A switch or derail aligned to prevent access to the working limits and secured with an effective securing device by the roadway worker in charge of the working limits;

(3) A discontinuity in the rail that precludes passage of trains or engines into the working limits;

(4) Working limits on controlled track that connects directly with the inaccessible track, established by the roadway worker in charge of the working limits on the inaccessible track; or

(5) A remotely controlled switch aligned to prevent access to the working limits and secured by the control operator of such remotely controlled switch by application of a locking or blocking device to the control of that switch, when:

(i) The control operator has secured the remotely controlled switch by applying a locking or blocking device to the control of the switch, and

(ii) The control operator has notified the roadway worker who has established the working limits that the requested protection has been provided, and

(iii) The control operator is not permitted to remove the locking or blocking device from the control of the switch until receiving permission to do so from the roadway worker who established the working limits.

(b) Trains and roadway maintenance machines within working limits established by means of inaccessible track shall move only under the direction of the roadway worker in charge of the working limits, and shall move at restricted speed.

(c) No operable locomotives or other items of on-track equipment, except those present or moving under the direction of the roadway worker in charge of the working limits, shall be located within working limits established by means of inaccessible track.

§ 214.329 Train approach warning provided by watchmen/lookouts.

Roadway workers in a roadway work group who foul any track outside of working limits shall be given warning of approaching trains by one or more watchmen/lookouts in accordance with the following provisions:

(a) Train approach warning shall be given in sufficient time to enable each roadway worker to move to and occupy a previously arranged place of safety not less than 15 seconds before a train moving at the maximum speed authorized on that track can pass the location of the roadway worker.

(b) Watchmen/lookouts assigned to provide train approach warning shall devote full attention to detecting the approach of trains and communicating a warning thereof, and shall not be assigned any other duties while functioning as watchmen/lookouts.

(c) The means used by a watchman/lookout to communicate a train approach warning shall be distinctive and shall clearly signify to all recipients of the warning that a train or other on-track equipment is approaching.

(d) Every roadway worker who depends upon train approach warning for on-track safety shall maintain a position that will enable him or her to receive a train approach warning communicated by a watchman/lookout at any

time while on-track safety is provided by train approach warning.

(e) Watchmen/lookouts shall communicate train approach warnings by a means that does not require a warned employee to be looking in any particular direction at the time of the warning, and that can be detected by the warned employee regardless of noise or distraction of work.

(f) Every roadway worker who is assigned the duties of a watchman/lookout shall first be trained, qualified and designated in writing by the employer to do so in accordance with the provisions of § 214.349.

(g) Every watchman/lookout shall be provided by the employer with the equipment necessary for compliance with the on-track safety duties which the watchman/lookout will perform.

§ 214.331 Definite train location.

A roadway worker may establish on-track safety by using definite train location only where permitted by and in accordance with the following provisions:

(a) A Class I railroad or a commuter railroad may only use definite train location to establish on-track safety at points where such procedures were in use on January 15, 1997.

(b) Each Class I or commuter railroad shall include in its on-track safety program for approval by FRA in accordance with § 214.307 of this part a schedule for phase-out of the use of definite train location to establish on-track safety.

(c) A railroad other than a Class I or commuter railroad may use definite train location to establish on-track safety on subdivisions only where:

(1) Such procedures were in use on January 15, 1997, or

(2) The number of trains operated on the subdivision does not exceed:

(i) Three during any nine-hour period in which roadway workers are on duty, and

(ii) Four during any twelve-hour period in which roadway workers are on duty.

(d) Definite train location shall only be used to establish on-track safety according to the following provisions:

(1) Definite train location information shall be issued only by the one train dispatcher who is designated to authorize train movements over the track for which the information is provided.

(2) A definite train location list shall indicate all trains to be operated on the track for which the list is provided, during the time for which the list is effective.

(3) Trains not shown on the definite train location list shall not be operated on the track for which the list is provided, during the time for which the list is effective, until each roadway worker to whom the list has been issued has been notified of the train movement, has acknowledged the notification to the train dispatcher, and has canceled the list. A list thus canceled shall then be invalid for on-track safety.

(4) Definite train location shall not be used to establish on-track safety within the limits of a manual interlocking, or on track over which train movements are governed by a Traffic Control System or by a Manual Block System.

(5) Roadway workers using definite train location for on-track safety shall not foul a track within ten minutes before the earliest time that a train is due to depart the last station at which time is shown in approach to the roadway worker's location nor until that train has passed the location of the roadway worker.

(6) A railroad shall not permit a train to depart a location designated in a definite train location list before the time shown therein.

(7) Each roadway worker who uses definite train location to establish on-track safety must be qualified on the relevant physical characteristics of the territory for which the train location information is provided.

§ 214.333 Informational line-ups of trains.

(a) A railroad is permitted to include informational line-ups of trains in its on-track safety program for use only on subdivisions of that railroad upon which such procedure was in effect on March 14, 1996.

(b) Each procedure for the use of informational line-ups of trains found in

an on-track safety program shall include all provisions necessary to protect roadway workers using the procedure against being struck by trains or other on-track equipment.

(c) Each on-track safety program that provides for the use of informational line-ups shall include a schedule for discontinuance of the procedure by a definite date.

§ 214.335 On-track safety procedures for roadway work groups.

(a) No employer subject to the provisions of this part shall require or permit a roadway worker who is a member of a roadway work group to foul a track unless on-track safety is provided by either working limits, train approach warning, or definite train location in accordance with the applicable provisions of §§ 214.319, 214.321, 213.323, 214.325, 214.327, 214.329 and 214.331 of this part.

(b) No roadway worker who is a member of a roadway work group shall foul a track without having been informed by the roadway worker responsible for the on-track safety of the roadway work group that on-track safety is provided.

(c) Roadway work groups engaged in large-scale maintenance or construction shall be provided with train approach warning in accordance with § 214.327 for movements on adjacent tracks that are not included within working limits.

§ 214.337 On-track safety procedures for lone workers.

(a) A lone worker who fouls a track while performing routine inspection or minor correction may use individual train detection to establish on-track safety only where permitted by this section and the on-track safety program of the railroad.

(b) A lone worker retains an absolute right to use on-track safety procedures other than individual train detection if he or she deems it necessary, and to occupy a place of safety until such other form of on-track safety can be established.

(c) Individual train detection may be used to establish on-track safety only:

(1) By a lone worker who has been trained, qualified, and designated to do so by the employer in accordance with § 214.347 of this subpart;

(2) While performing routine inspection and minor correction work;

(3) On track outside the limits of a manual interlocking, a controlled point, or a remotely controlled hump yard facility;

(4) Where the lone worker is able to visually detect the approach of a train moving at the maximum speed authorized on that track, and move to a previously determined place of safety, not less than 15 seconds before the train would arrive at the location of the lone worker;

(5) Where no power-operated tools or roadway maintenance machines are in use within the hearing of the lone worker; and

(6) Where the ability of the lone worker to hear and see approaching trains and other on-track equipment is not impaired by background noise, lights, precipitation, fog, passing trains, or any other physical conditions.

(d) The place of safety to be occupied by a lone worker upon the approach of a train may not be on a track, unless working limits are established on that track.

(e) A lone worker using individual train detection for on-track safety while fouling a track may not occupy a position or engage in any activity that would interfere with that worker's ability to maintain a vigilant lookout for, and detect the approach of, a train moving in either direction as prescribed in this section.

(f) A lone worker who uses individual train detection to establish on-track safety shall first complete a written Statement of On-track Safety. The Statement shall designate the limits of the track for which it is prepared and the date and time for which it is valid. The statement shall show the maximum authorized speed of trains within the limits for which it is prepared, and the sight distance that provides the required warning of approaching trains. The lone worker using individual train detection to establish on-track safety shall produce the Statement of On-track Safety when requested by a representative of the Federal Railroad Administrator.

§ 214.339 Audible warning from trains.

Each railroad shall require that the locomotive whistle be sounded, and the locomotive bell be rung, by trains approaching roadway workers on or about the track. Such audible warning shall not substitute for on-track safety procedures prescribed in this part.

§ 214.341 Roadway maintenance machines.

(a) Each employer shall include in its on-track safety program specific provisions for the safety of roadway workers who operate or work near roadway maintenance machines. Those provisions shall address:

(1) Training and qualification of operators of roadway maintenance machines.

(2) Establishment and issuance of safety procedures both for general application and for specific types of machines.

(3) Communication between machine operators and roadway workers assigned to work near or on roadway maintenance machines.

(4) Spacing between machines to prevent collisions.

(5) Space between machines and roadway workers to prevent personal injury.

(6) Maximum working and travel speeds for machines dependent upon weather, visibility, and stopping capabilities.

(b) Instructions for the safe operation of each roadway machine shall be provided and maintained with each machine large enough to carry the instruction document.

(1) No roadway worker shall operate a roadway maintenance machine without having been trained in accordance with § 214.355.

(2) No roadway worker shall operate a roadway maintenance machine without having complete knowledge of the safety instructions applicable to that machine.

(3) No employer shall assign roadway workers to work near roadway machines unless the roadway worker has been informed of the safety procedures applicable to persons working near the roadway machines and has acknowledged full understanding.

(c) Components of roadway maintenance machines shall be kept clear of trains passing on adjacent tracks. Where operating conditions permit roadway maintenance machines to be less than four feet from the rail of an adjacent track, the on-track safety program of the railroad shall include the procedural instructions necessary to provide adequate clearance between the machine and passing trains.

§ 214.343 Training and qualification, general.

(a) No employer shall assign an employee to perform the duties of a roadway worker, and no employee shall accept such assignment, unless that employee has received training in the on-track safety procedures associated with the assignment to be performed, and that employee has demonstrated the ability to fulfill the responsibilities for on-track safety that are required of an individual roadway worker performing that assignment.

(b) Each employer shall provide to all roadway workers in its employ initial or recurrent training once every calendar year on the on-track safety rules and procedures that they are required to follow.

(c) Railroad employees other than roadway workers, who are associated with on-track safety procedures, and whose primary duties are concerned with the movement and protection of trains, shall be trained to perform their functions related to on-track safety through the training and qualification procedures prescribed by the operating railroad for the primary position of the employee, including maintenance of records and frequency of training.

(d) Each employer of roadway workers shall maintain written or electronic records of each roadway worker qualification in effect. Each record shall include the name of the employee, the type of qualification made, and the most recent date of qualification. These records shall be kept available for inspection and photocopying by the Federal Railroad Administrator during regular business hours.

§ 214.345 Training for all roadway workers.

The training of all roadway workers shall include, as a minimum, the following:

(a) Recognition of railroad tracks and understanding of the space around them within which on-track safety is required.

(b) The functions and responsibilities of various persons involved with on-track safety procedures.

(c) Proper compliance with on-track safety instructions given by persons performing or responsible for on-track safety functions.

(d) Signals given by watchmen/lookouts, and the proper procedures upon receiving a train approach warning from a lookout.

(e) The hazards associated with working on or near railroad tracks, including review of on-track safety rules and procedures.

§ 214.347 Training and qualification for lone workers.

Each lone worker shall be trained and qualified by the employer to establish on-track safety in accordance with the requirements of this section, and must be authorized to do so by the railroad that conducts train operations on those tracks.

(a) The training and qualification for lone workers shall include, as a minimum, consideration of the following factors:

(1) Detection of approaching trains and prompt movement to a place of safety upon their approach.

(2) Determination of the distance along the track at which trains must be visible in order to provide the prescribed warning time.

(3) Rules and procedures prescribed by the railroad for individual train detection, establishment of working limits, and definite train location.

(4) On-track safety procedures to be used in the territory on which the employee is to be qualified and permitted to work alone.

(b) Initial and periodic qualification of a lone worker shall be evidenced by demonstrated proficiency.

§ 214.349 Training and qualification of watchmen/lookouts.

(a) The training and qualification for roadway workers assigned the duties of watchmen/lookouts shall include, as a minimum, consideration of the following factors:

(1) Detection and recognition of approaching trains.

(2) Effective warning of roadway workers of the approach of trains.

(3) Determination of the distance along the track at which trains must be visible in order to provide the prescribed warning time.

(4) Rules and procedures of the railroad to be used for train approach warning.

(b) Initial and periodic qualification of a watchman/lookout shall be evidenced by demonstrated proficiency.

§ 214.351 Training and qualification of flagmen.

(a) The training and qualification for roadway workers assigned the duties of flagmen shall include, as a minimum, the content and application of the operating rules of the railroad pertaining to giving proper stop signals to trains and holding trains clear of working limits.

(b) Initial and periodic qualification of a flagman shall be evidenced by demonstrated proficiency.

§ 214.353 Training and qualification of roadway workers who provide on-track safety for roadway work groups.

(a) The training and qualification of roadway workers who provide for the on-track safety of groups of roadway workers through establishment of working limits or the assignment and supervision of watchmen/lookouts or flagmen shall include, as a minimum:

(1) All the on-track safety training and qualification required of the roadway workers to be supervised and protected.

(2) The content and application of the operating rules of the railroad pertaining to the establishment of working limits.

(3) The content and application of the rules of the railroad pertaining to the establishment or train approach warning.

(4) The relevant physical characteristics of the territory of the railroad upon which the roadway worker is qualified.

(b) Initial and periodic qualification of a roadway worker to provide on track safety for groups shall be evidenced by a recorded examination.

§ 214.355 Training and qualification in on-track safety for operators of roadway maintenance machines.

(a) The training and qualification of roadway workers who operate roadway maintenance machines shall include, as a minimum:

(1) Procedures to prevent a person from being struck by the machine when the machine is in motion or operation.

(2) Procedures to prevent any part of the machine from being struck by a train or other equipment on another track.

(3) Procedures to provide for stopping the machine short of other machines or obstructions on the track.

(4) Methods to determine safe operating procedures for each machine that the operator is expected to operate.

(b) Initial and periodic qualification of a roadway worker to operate roadway maintenance machines shall be evidenced by demonstrated proficiency.

APPENDIX A TO PART 214—SCHEDULE OF CIVIL PENALTIES [1]

Section	Violation	Willful
Subpart B—Bridge Worker Safety Standards		
214.103 Fall protection:		
(i) Failure to provide fall protection	$5,000	$10,000
(ii) Failure to use fall protection	.....	2,500
214.105 Standards and practices:		
(a) General:		
(1) Fall protection used for other purposes	2,500	5,000
(2) Failure to remove from service	2,500	5,000
(3) Failure to protect from deterioration	2,500	5,000
(4) Failure to inspect and remove	5,000	10,000
(5) Failure to train	5,000	10,000
(6) Failure to provide for prompt rescue	5,000	10,000
(7) Failure to prevent damage	2,500	5,000
(8) Failure to use proper connectors	2,500	5,000
(9) Failure to use proper anchorages	2,500	5,000
(b) Fall arrest system:		
(1)–(17) Failure to provide conforming equipment	2,500	5,000
(c) Safety net systems:		
(1) Failure to install close to workplace	2,500	5,000
(2) Failure to provide fall arrest if over 30 feet	5,000	10,000
(3) Failure to provide for unobstructed fall	5,000	10,000
(4) Failure to test	2,500	5,000
(5) Failure to use proper equipment	2,500	5,000
(6) Failure to prevent contact with surface below	5,000	10,000
(7) Failure to properly install	5,000	10,000
(8) Failure to remove defective nets	5,000	10,000
(9) Failure to inspect	5,000	10,000
(10) Failure to remove objects	1,000	2,500
(11)–(13) Failure to use conforming equipment	2,500	10,000
214.107 Working over water:		
(a)(i) Failure to provide life vest	5,000	10,000
(ii) Failure to use life vest	.....	1,500
(c) Failure to inspect	2,500	5,000
(e)(i) Failure to provide ring bouys	5,000	10,000
(ii) Failure to use ring bouys	.....	1,500
(f)(i) Failure to provide skiff	1,000	2,500
(ii) Failure to use skiff	.....	1,500
214.109 Scaffolding:		
(a)–(f) Failure to provide conforming equipment	2,500	5,000
214.113 Head protection:		
(a)(i) Failure to provide	2,500	5,000
(ii) Failure to use	.....	1,500
(b) or (c) Failure to provide conforming equipment	2,500	5,000
214.115 Foot protection:		
(a)(i) Failure to require use of	2,500	5,000
(ii) Failure to use	.....	1,500
214.117 Eye and face protection:		
(a)(i) Failure to provide	2,500	5,000

APPENDIX A TO PART 214—SCHEDULE OF CIVIL PENALTIES [1]—Continued

Section	Violation	Willful
(ii) Failure to use	.....	1,500
(b) Failure to use conforming equipment	2,500	5,000
(c) Use of defective equipment	2,500	5,000
(d) Failure to provide for corrective lenses	2,500	5,000
Subpart C— Roadway Worker Protection Rule		
214.303 Railroad on-track safety programs, generally:		
(a) Failure of a railroad to implement an On-track Safety Program	10,000	20,000
(b) On-track Safety Program of a railroad includes no internal monitoring procedure	5,000	10,000
214.305 Compliance Dates:		
Failure of a railroad to comply by the specified dates	5,000	10,000
214.307 Review and approval of individual on-track safety programs by FRA:		
(a)(i) Failure to notify FRA of adoption of On-track Safety Program	1,000	5,000
(ii) Failure to designate primary person to contact for program review	1,000	2,000
214.309 On-track safety program documents:		
(1) On-track Safety Manual not provided to prescribed employees	2,000	5,000
(2) On-track Safety Program documents issued in fragments	2,000	5,000
214.311 Responsibility of employers:		
(b) Roadway worker required by employer to foul a track during an unresolved challenge	5,000	10,000
(c) Roadway workers not provided with written procedure to resolve challenges of on-track safety procedures	5,000	10,000
214.313 Responsibility of individual roadway workers:		
(b) Roadway worker fouling a track when not necessary in the performance of duty	.....	1,000
(c) Roadway worker fouling a track without ascertaining that provision is made for on-track safety	.....	1,500
(d) Roadway worker failing to notify employer of determination of improper on-track safety provisions	.....	3,000
214.315 Supervision and communication:		
(a) Failure of employer to provide job briefing	2,000	10,000
(b) Incomplete job briefing	2,000	5,000
(c)(i) Failure to designate roadway worker in charge of roadway work group	2,000	5,000
(ii) Designation of more than one roadway worker in charge of one roadway work group	1,000	2,000
(iii) Designation of non-qualified roadway worker in charge of roadway work group	3,000	6,000
(d)(i) Failure to notify roadway workers of on-track safety procedures in effect	3,000	6,000
(ii) Incorrect information provided to roadway workers regarding on-track safety procedures in effect	3,000	6,000
(iii) Failure to notify roadway workers of change in on-track safety procedures	3,000	6,000
(e)(i) Failure of lone worker to communicate with designated employee for daily job briefing	.....	1,500
(ii) Failure of employer to provide means for lone worker to receive daily job briefing	3,000	6,000
214.317 On-track safety procedures, generally:		
On-track safety rules conflict with this part	5,000	10,000
214.319 Working limits, generally:		
(a) Non-qualified roadway worker in charge of working limits	5,000	10,000
(b) More than one roadway worker in charge of working limits on the same track segment	2,000	5,000
(c)(1) Working limits released without notifying all affected roadway workers	5,000	10,000
(2) Working limits released before all affected roadway workers are otherwise protected	5,000	10,000
214.321 Exclusive track occupancy:		
(b) Improper transmission of authority for exclusive track occupancy	2,000	5,000
(b)(1) Failure to repeat authority for exclusive track occupancy to issuing employee	.....	1,500
(2) Failure to retain possession of written authority for exclusive track occupancy	.....	1,000
(3) Failure to record authority for exclusive track occupancy when issued	.....	2,000
(c) Limits of exclusive track occupancy not identified by proper physical features	2,000	4,000
(d)(1) Movement authorized into limits of exclusive track occupancy without authority of roadway worker in charge	5,000	10,000
(2) Movement authorized within limits of exclusive track occupancy without authority of roadway worker in charge	5,000	10,000
(3) Movement within limits of exclusive track occupancy exceeding restricted speed without authority of roadway worker in charge	5,000	10,000
214.323 Foul time:		
(a) Foul time authority overlapping movement authority of train or equipment	5,000	10,000
(b) Failure to repeat foul time authority to issuing employee	.....	1,500
214.325 Train coordination:		
(a) Train coordination limits established where more than one train is authorized to operate	1,500	4,000
(b)(1) Train coordination established with train not visible to roadway worker at the time	.....	1,500
(2) Train coordination established with moving train	.....	1,500
(3) Coordinated train moving without authority of roadway worker in charge	2,000	5,000
(4) Coordinated train releasing movement authority while working limits are in effect	3,000	6,000
214.327 Inaccessible track:		
(a) Improper control of entry to inaccessible track	3,000	6,000
(5) Remotely controlled switch not properly secured by control operator	3,000	6,000
(b) Train or equipment moving within inaccessible track limits without permission of roadway worker in charge	3,000	6,000
(c) Unauthorized train or equipment located within inaccessible track limits	2,000	5,000
214.329 Train approach warning provided by watchmen/lookouts:		
(a) Failure to give timely warning of approaching train	.....	5,000

APPENDIX A TO PART 214—SCHEDULE OF CIVIL PENALTIES [1]—Continued

Section	Violation	Willful
(b)(1) Failure of watchman/lookout to give full attention to detecting approach of train		3,000
(2) Assignment of other duties to watchman/lookout	3,000	5,000
(c) Failure to provide proper warning signal devices	2,000	5,000
(d) Failure to maintain position to receive train approach warning signal		2,000
(e) Failure to communicate proper warning signal	1,500	3,000
(f)(1) Assignment of non-qualified person as watchman/lookout	3,000	5,000
(2) Non-qualified person accepting assignment as watchman/lookout		1,500
(g) Failure to properly equip a watchman/lookout	2,000	4,000
214.331 Definite train location:		
(a) Definite train location established where prohibited	3,000	5,000
(b) Failure to phase out definite train location by required date	3,000	5,000
(d)(1) Train location information issued by unauthorized person	2,000	5,000
(2) Failure to include all trains operated on train location list	3,000	5,000
(5) Failure to clear a by ten minutes at the last station at which time is shown		2,000
(6) Train passing station before time shown in train location list	3,000	5,000
(7) Non-qualified person using definite train location to establish on- track safety	2,000	3,000
214.333 Informational line-ups of trains:		
(a) Informational line-ups of trains used for on-track safety where prohibited	3,000	5,000
(b) Informational line-up procedures inadequate to protect roadway workers	5,000	10,000
(c) Failure to discontinue informational line-ups by required date	5,000	10,000
214.335 On-track safety procedures for roadway work groups :		
(a) Failure to provide on-track safety for a member of a roadway work group	3,000	5,000
(b) Member of roadway work group fouling a track without authority of employee in charge		2,000
(c) Failure to provide train approach warning or working limits on adjacent track where required	3,000	5,000
214.337 On-track safety procedures for lone workers:		
(b) Failure by employer to permit individual discretion in use of individual train detection	5,000	10,000
(c)(1) Individual train detection used by non-qualified employee	2,000	4,000
(2) Use of individual train detection while engaged in heavy or distracting work		2,000
(3) Use of individual train detection in controlled point or manual interlocking		2,000
(4) Use of individual train detection with insufficient visibility		2,000
(5) Use of individual train detection with interfering noise		2,000
(6) Use of individual train detection while a train is passing		3,000
(d) Failure to maintain access to place of safety clear of live tracks		2,000
(e) Lone worker unable to maintain vigilant lookout		2,000
(f)(1) Failure to prepare written statement of on-track safety		1,500
(2) Incomplete written statement of on-track safety		1,000
(3) Failure to produce written statement of on-track safety to FRA		1,500
214.339 Audible warning from trains:		
(a) Failure to require audible warning from trains	2,000	4,000
(b) Failure of train to give audible warning where required	1,000	3,000
214.341 Roadway maintenance machines:		
(a) Failure of on-track safety program to include provisions for safety near roadway maintenance machines	3,000	5,000
(b) Failure to provide operating instructions	2,000	4,000
(1) Assignment of non-qualified employee to operate machine	2,000	5,000
(2) Operator unfamiliar with safety instructions for machine	2,000	5,000
(3) Roadway worker working with unfamiliar machine	2,000	5,000
(c) Roadway maintenance machine not clear of passing trains	3,000	6,000
214.343 Training and qualification, general:		
(a)(1) Failure of railroad program to include training provisions	5,000	10,000
(2) Failure to provide initial training	3,000	6,000
(b) Failure to provide annual training	2,500	5,000
(c) Assignment of non-qualified railroad employees to provide on-track safety	4,000	8,000
(d)(1) Failure to maintain records of qualifications	2,000	4,000
(2) Incomplete records of qualifications	1,000	3,000
(3) Failure to provide records of qualifications to FRA	2,000	4,000
214.345 Training for all roadway workers		
214.347 Training and qualification for lone workers		
214.349 Training and qualification of watchmen/lookouts		
214.351 Training and qualification of flagmen		
214.353 Training and qualification of roadway workers who provide on-track safety for roadway work groups		
214.355 Training and qualification in on-track safety for operators of roadway maintenance machines		

[1] A penalty may be assessed against an individual only for a willful violation. The Administrator reserves the right to assess a penalty of up to $20,000 for any violation where circumstances warrant. See 49 CFR part 209, appendix A.

[57 FR 28127, June 24, 1992, as amended at 61 FR 65981, Dec. 16, 1996]

PART 215—RAILROAD FREIGHT CAR SAFETY STANDARDS

Subpart A—General

Sec.
215.1 Scope of part.
215.3 Application.
215.5 Definitions.
215.7 Prohibited acts.
215.9 Movement of defective cars for repair.
215.11 Designated inspectors.
215.13 Pre-departure inspection.
215.15 Periodic inspection.

Subpart B—Freight Car Components

215.101 Scope.

SUSPENSION SYSTEM

215.103 Defective wheel.
215.105 Defective axle.
215.107 Defective plain bearing box: General.
215.109 Defective plain bearing box: Journal lubrication system.
215.111 Defective plain bearing.
215.113 Defective plain bearing wedge.
215.115 Defective roller bearing.
215.117 Defective roller bearing adapter.
215.119 Defective freight car truck.

CAR BODIES

215.121 Defective car body.

DRAFT SYSTEM

215.123 Defective couplers.
215.125 Defective uncoupling device.
215.127 Defective draft arrangement.
215.129 Defective cushioning device.

Subpart C—Restricted Equipment

215.201 Scope.
215.203 Restricted cars.

Subpart D—Stenciling

215.301 General.
215.303 Stenciling of restricted cars.
215.305 Stenciling of maintenance-of-way equipment.
APPENDIX A TO PART 215—RAILROAD FREIGHT CAR COMPONENTS
APPENDIX B TO PART 215—SCHEDULE OF CIVIL PENALTIES
APPENDIX C TO PART 215—FRA FREIGHT CAR STANDARDS DEFECT CODE
APPENDIX D TO PART 215—PRE–DEPARTURE INSPECTION PROCEDURE

AUTHORITY: 45 U.S.C. 431 and 438, as amended; Pub. L. 100–342; and 49 CFR 1.49(m).

SOURCE: 44 FR 77340, Dec. 31, 1979, unless otherwise noted.

Subpart A—General

§215.1 Scope of part.

This part prescribes minimum Federal safety standards for railroad freight cars.

§215.3 Application.

(a) Except as provided in paragraphs (b) and (c) of this section, this part applies to each railroad freight car in service on:

(1) Standard gage track of a railroad; or

(2) Any other standard gage track while the car is being operated by, or is otherwise under the control of, a railroad.

(b) Sections 215.15 and 215.303 of this part do not apply to any car:

(1) Owned by a Canadian or Mexican Railroad; and

(2) Having a Canadian or Mexican reporting mark and car number.

(c) This part does not apply to a railroad freight car that is:

(1) Operated solely on track inside an industrial or other non-railroad installation; or

(2) Used exclusively in dedicated service as defined in §215.5(d) of this part; or

(3) Maintenance-of-way equipment (including self-propelled maintenance-of-way equipment) if that equipment is not used in revenue service and is stenciled in accordance with §215.305 of this part.

§215.5 Definitions.

As used in this part:

(a) *Break* means a fracture resulting in complete separation into parts;

(b) *Cracked* means fractured without complete separation into parts, except that castings with shrinkage cracks or hot tears that do not significantly diminish the strength of the member are not considered to be ''cracked'';

(c) *Railroad freight car* means a car designed to carry freight, or railroad personnel, by rail and includes a:

(1) Box car;
(2) Refrigerator car;
(3) Ventilator car;
(4) Stock car;
(5) Gondola car;
(6) Hopper car;
(7) Flat car;

(8) Special car;
(9) Caboose car;
(10) Tank car; and
(11) Yard car.

(d) *Dedicated service* means the exclusive assignment of cars to the transportation of freight between specified points under the following conditions:

(1) The cars are operated—

(i) Primarily on track that is inside an industrial or other non-railroad installation; and

(ii) Only occasionally over track of a railroad;

(2) The cars are not operated—

(i) At speeds of more than 15 miles per hour; and

(ii) Over track of a railroad—

(A) For more than 30 miles in one direction; or

(B) On a round trip of more than 60 miles;

(3) The cars are not freely interchanged among railroads;

(4) The words ''Dedicated Service'' are stenciled, or otherwise displayed, in clearly legible letters on each side of the car body;

(5) The cars have been examined and found safe to operate in dedicated service; and

(6) The railroad must—

(i) Notify the FRA in writing that the cars are to be operated in dedicated service;

(ii) Identify in that notice—

(A) The railroads affected;

(B) The number and type of cars involved;

(C) The commodities being carried; and

(D) The territorial and speed limits within which the cars will be operated; and

(iii) File the notice required by this paragraph not less than 30 days before the cars operate in dedicated service;

(e) *In service* when used in connection with a railroad freight car, means each railroad freight car subject to this part unless the car:

(1) Has a ''bad order'' or ''home shop for repairs'' tag or card containing the prescribed information attached to each side of the car and is being handled in accordance with § 215.9 of this part;

(2) Is in a repair shop or on a repair track;

(3) Is on a storage track and is empty; or

(4) Has been delivered in interchange but has not been accepted by the receiving carrier.

(f) *Railroad* means all forms of non-highway ground transportation that run on rails or electromagnetic guideways, including (1) commuter or other short–haul rail passenger service in a metropolitan or suburban area, and (2) high speed ground transportation systems that connect metropolitan areas, without regard to whether they use new technologies not associated with traditional railroads. Such term does not include rapid transit operations within an urban area that are not connected to the general railroad system of transportation.

(g) *State inspector* means an inspector who is participating in investigative and surveillance activities under section 206 of the Federal Railroad Safety Act of 1970 (45 U.S.C. 435).

[44 FR 77340, Dec. 31, 1979, as amended at 45 FR 26710, Apr. 21, 1980; 54 FR 33228, Aug. 14, 1989]

§ 215.7 Prohibited acts.

Any person (including a railroad and any manager, supervisor, official, or other employee or agent of a railroad) who violates any requirement of this part or causes the violation of any such requirement is subject to a civil penalty of at least $250 and not more than $10,000 per violation, except that: Penalties may be assessed against individuals only for willful violations, and, where a grossly negligent violation or a pattern of repeated violations has created an imminent hazard of death or injury to persons, or has caused death or injury, a penalty not to exceed $20,000 per violation may be assessed. Each day a violation continues shall constitute a separate offense. See appendix B to this part for a statement of agency civil penalty policy.

[53 FR 28599, July 28, 1988, as amended at 53 FR 52925, Dec. 29, 1988]

§ 215.9 Movement of defective cars for repair.

(a) A railroad freight car which has any component described as defective in this part may be moved to another

location for repair only after the railroad has complied with the following:

(1) A person designated under §215.11 shall determine:

(i) That it is safe to move the car; and

(ii) The maximum speed and other restrictions necessary for safely conducting the movement;

(2)(i) The person in charge of the train in which the car is to be moved shall be notified in writing and inform all other crew members of the presence of the defective car and the maximum speed and other restrictions determined under paragraph (a)(1)(ii) of this section.

(ii) A copy of the tag or card described in paragraph (a)(3) of this section may be used to provide the notification required by paragraph (a)(2)(i) of this section.

(3) A tag or card bearing the words ''bad order'' or ''home shop for repairs'' and containing the following information, shall be securely attached to each side of the car—

(i) The reporting mark and car number;

(ii) The name of the inspecting railroad;

(iii) The inspection location and date;

(iv) The nature of each defect;

(v) Movement restrictions;

(vi) The destination for shopping or repair; and

(vii) The signature of a person designated under §215.11.

(b)(1) The tag or card required by paragraph (a)(3) of this section may only be removed from the car by a person designated under §215.11 of this part.

(2) A record or copy of each tag or card attached to or removed from a car shall be retained for 90 days and, upon request, shall be made available within 15 calendar days for inspection by FRA or State inspectors.

(3) Each tag or card removed from a car shall contain a notification stating the date, location, reason for its removal, and the signature of the person who removed it from the car. These recordkeeping requirements have been approved by the Office of Management and Budget in accordance with the Federal Reports Act of 1942.

(c) Movement of a freight car under paragraph (a) of this section may be made only for the purpose of effecting repairs. If the car is empty, it may not be placed for loading. If the car is loaded, it may not be placed for unloading unless unloading is consistent with determinations made and restrictions imposed under paragraph (a)(1) of this section and—

(1) The car is consigned for a destination on the line of haul between the point where the car was found defective and the point where repairs are made; or

(2) Unloading is necessary for the safe repair of the car.

(d) Nothing in this section authorizes the movement of a freight car subject to a Special Notice for Repairs unless the movement is made in accordance with the restrictions contained in the Special Notice.

[44 FR 77340, Dec. 31, 1979; 45 FR 26710, Apr. 21, 1980]

§215.11 Designated inspectors.

(a) Each railroad that operates railroad freight cars to which this part applies shall designate persons qualified to inspect railroad freight cars for compliance with this part and to make the determinations required by §215.9 of this part.

(b) Each person designated under this section shall have demonstrated to the railroad a knowledge and ability to inspect railroad freight cars for compliance with the requirements of this part and to make the determinations required by §215.9 of this part.

(c) With respect to designations under this section, each railroad shall maintain written records of:

(1) Each designation in effect; and

(2) The basis for each designation.

[45 FR 26710, Apr. 21, 1980]

§215.13 Pre-departure inspection.

(a) At each location where a freight car is placed in a train, the freight car shall be inspected before the train departs. This inspection may be made before or after the car is placed in the train.

(b) At a location where an inspector designated under §215.11 is on duty for the purpose of inspecting freight cars,

the inspection required by paragraph (a) of this section shall be made by that inspector to determine whether the car is in compliance with this part.

(c) At a location where a person designated under § 215.11 is not on duty for the purpose of inspecting freight cars, the inspection required by paragraph (a) shall, as a minimum, be made for those conditions set forth in appendix D to this part.

(d) Performance of the inspection prescribed by this section does not relieve a railroad of its liability under § 215.7 for failure to comply with any other provision of this part.

[45 FR 26710, Apr. 21, 1980]

§ 215.15 Periodic inspection.

(a) After June 30, 1980, a railroad may not place or continue in service a freight car that has not received an initial periodic inspection in accordance with 49 CFR 215.25, as in effect on October 6, 1976 (41 FR 44044), unless—

(1) The car is a high utilization car built or reconditioned after December 31, 1977; or

(2) The car is a non-high utilization car built or reconditioned after December 31, 1971.

(b) A freight car that has received an initial periodic inspection under paragraph (a) of this section shall be stenciled to so indicate in accordance with 49 CFR 215.11 and appendix C of this part, as in effect on October 6, 1976 (41 FR 44044). This stenciling need not be retained on the car after June 30, 1981.

(c) As used in this section, ''high utilization car'' means a car—

(1) Specifically equipped to carry trucks, automobiles, containers, trailers, or removable trailer bodies for the transportation of freight; or

(2) Assigned to a train that operates in a continuous round trip cycle between the same two points.

Subpart B—Freight Car Components

§ 215.101 Scope.

This subpart contains safety requirements prohibiting a railroad from placing or continuing in service a freight car that has certain defective components.

SUSPENSION SYSTEM

§ 215.103 Defective wheel.

A railroad may not place or continue in service a car, if—

(a) A wheel flange on the car is worn to a thickness of ⅞ of an inch, or less, at a point ⅜ of an inch above the tread of the wheel;

(b) The height of a wheel flange on the car, from the tread to the top of the flange, is 1½ inches, or more;

(c) The thickness of a rim of a wheel on the car is 11⁄16 of an inch, or less;

(d) A wheel rim, flange, plate, or hub area on the car has a crack or break;

(e) A wheel on the car has a chip or gouge in the flange that is 1½ inches in length and ½ inch in width, or more;

(f) A wheel on the car has—

(1) A slid flat or shelled spot that is more than 2½ inches in length; or

(2) Two adjoining flat or shelled spots each of which is more than two inches in length;

(g) A wheel on the car shows evidence of being loose such as oil seepage on the back hub or back plate;

(h) A wheel on the car shows signs of having been overheated as evidenced by a reddish brown discoloration, to a substantially equal extent on both the front and the back face of the rim, that extends on either face more than four inches into the plate area measured from the inner edge of the front or back face of the rim; or,

(i) A wheel on the car has been welded unless the car is being moved for repair in accordance with § 215.9 of this part.

[44 FR 77340, Dec. 31, 1979, as amended at 50 FR 13382, Apr. 4, 1985]

§ 215.105 Defective axle.

A railroad may not place or continue in service a car, if—

(a) An axle on the car has a crack or is broken;

(b) An axle on the car has a gouge in the surface that is—

(1) Between the wheel seats; and

(2) More than one-eighth inch in depth;

(c) An axle on the car, used in conjunction with a plain bearing, has an end collar that is broken or cracked;

(d) A journal on the car shows evidence of overheating, as evidenced by a

pronounced blue black discoloration; or

(e) The surface of the plain bearing journal on the axle, or the fillet on the axle, has—

(1) A ridge;

(2) A depression;

(3) A circumferential score;

(4) Corrugation;

(5) A scratch;

(6) A continuous streak;

(7) Pitting;

(8) Rust; or

(9) Etching.

§215.107 Defective plain bearing box: General.

A railroad may not place or continue in service a car, if the car has—

(a) A plain bearing box that does not contain visible free oil;

(b) A plain bearing box lid that is missing, broken, or open except to receive servicing; or

(c) A plain bearing box containing foreign matter, such as dirt, sand, or coal dust, that can reasonably be expected to—

(1) Damage the bearing; or

(2) Have a detrimental effect on the lubrication of the journal and the bearings.

§215.109 Defective plain bearing box: Journal lubrication system.

A railroad may not place or continue in service a car, if the car has a plain bearing box with a lubricating pad that—

(a) Has a tear extending half the length or width of the pad, or more;

(b) Shows evidence of having been scorched, burned, or glazed;

(c) Contains decaying or deteriorated fabric that impairs proper lubrication of the pad;

(d) Has—

(1) An exposed center core (except by design); or

(2) Metal parts contacting the journal; or

(e) Is—

(1) Missing; or

(2) Not in contact with the journal.

§215.111 Defective plain bearing.

A railroad may not place or continue in service a car, if the car has a plain bearing—

(a) That is missing, cracked, or broken;

(b) On which the bearing liner—

(1) Is loose; or

(2) Has a broken out piece; or

(c) That shows signs of having been overheated, as evidenced by—

(1) Melted babbitt;

(2) Smoke from hot oil; or

(3) Journal surface damage.

§215.113 Defective plain bearing wedge.

A railroad may not place or continue in service a car, if a plain bearing wedge on that car is—

(a) Missing;

(b) Cracked;

(c) Broken; or

(d) Not located in its design position.

§215.115 Defective roller bearing.

(a) A railroad may not place or continue in service a car, if the car has—

(1) A roller bearing that shows signs of having been overheated as evidenced by—

(i) Discoloration; or

(ii) Other telltale signs of overheating such as damage to the seal or distortion of any bearing component;

(2) A roller bearing with a—

(i) Loose or missing cap screw; or

(ii) Broken, missing, or improperly applied cap screw lock; or

(3) A roller bearing with a seal that is loose or damaged, or permits leakage of lubricant in clearly formed droplets.

(b)(1) A railroad may not continue in service a car that has a roller bearing whose truck was involved in a derailment unless the bearing has been inspected and tested by:

(i) Visual examination to determine whether it shows any sign of damage; and

(ii) Spinning freely its wheel set or manually rotating the bearing to determine whether the bearing makes any unusual noise.

(2) The roller bearing shall be disassembled from the axle and inspected internally if—

(i) It shows any external sign of damage;

(ii) It makes any unusual noise when its wheel set is spun freely or the bearing is manually rotated;

(iii) Its truck was involved in a derailment at a speed of more than 10 miles per hour; or

(iv) Its truck was dragged on the ground for more than 200 feet.

(3) Each defective roller bearing shall be repaired or replaced before the car is placed back in service.

[44 FR 77340, Dec. 31, 1979, as amended at 45 FR 26711, Apr. 21, 1980]

§ 215.117 Defective roller bearing adapter.

A railroad may not place or continue in service a car, if the car has a roller bearing adapter that is—

(a) Cracked or broken;

(b) Not in its design position; or

(c) Worn on the crown of the adapter to the extent that the frame bears on the relief portion of the adapter, as shown in the figure below (see figure 1).

§ 215.119 Defective freight car truck.

A railroad may not place or continue in service a car, if the car has—

(a) A side frame or bolster that—

(1) Is broken; or

(2) Has a crack of ¼ of an inch or more in the transverse direction on a tension member;

(b) A truck equipped with a snubbing device that is ineffective, as evidenced by—

(1) A snubbing friction element that is worn beyond a wear indicator;

(2) A snubber wear plate that is loose, missing (except by design), or worn through;

(3) A broken or missing snubber activating spring; or

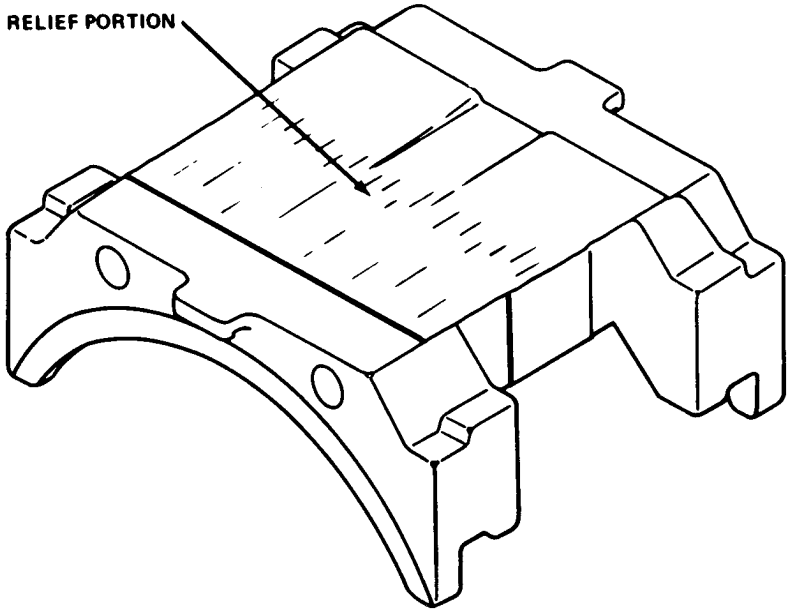

FIGURE 1

(4) Snubber unit that is broken, or in the case of hydraulic units, is broken or leaking clearly formed droplets of oil or other fluid.

(c) A side bearing in any of the following conditions:

(1) Part of the side bearing assembly is missing or broken;

(2) The bearings at one end of the car, on both sides, are in contact with the body bolster (except by design);

(3) The bearings at one end of the car have a total clearance from the body bolster of more than ¾ of an inch; or

(4) At diagonally opposite sides of the car, the bearings have a total clearance from the body bolsters of more than ¾ of an inch;

(d) Truck springs—

(1) That do not maintain travel or load;

(2) That are compressed solid; or

(3) More than one outer spring of which is broken, or missing, in any spring cluster;

(e) Interference between the truck bolster and the center plate that prevents proper truck rotations; or

(f) Brake beam shelf support worn so excessively that it does not support the brake beam.

CAR BODIES

§ 215.121 Defective car body.

A railroad may not place or continue in service a car, if:

(a) Any portion of the car body, truck, or their appurtenances (except wheels) has less than a 2½ inch clearance from the top of rail;

(b) The car center sill is:

(1) Broken;

(2) Cracked more than 6 inches; or

(3) Permanently bent or buckled more than 2½ inches in any six foot length;

(c) The car has a coupler carrier that is:

(1) Broken;

(2) Missing;

(3) Non-resilient and the coupler has a type F head.

(d) After December 1, 1983, the car is a box car and its side doors are not equipped with operative hangers, or the equivalent, to prevent the doors from becoming disengaged.

(e) The car has a center plate:

(1) That is not properly secured;

(2) Any portion of which is missing; or

(3) That is broken; or

(4) That has two or more cracks through its cross section (thickness) at the edge of the plate that extend to the portion of the plate that is obstructed from view while the truck is in place; or

(f) The car has a broken sidesill, crossbearer, or body bolster.

[44 FR 77340, Dec. 31, 1979, as amended at 47 FR 53737, Dec. 29, 1982]

DRAFT SYSTEM

§ 215.123 Defective couplers.

A railroad may not place or continue in service a car, if—

(a) The car is equipped with a coupler shank that is bent out of alignment to the extent that the coupler will not couple automatically with the adjacent car;

(b) The car has a coupler that has a crack in the highly stressed junction area of the shank and head as shown in the figure below (see figure 2).

(c) The car has a coupler knuckle that is broken or cracked on the inside pulling face of the knuckle.

(d) The car has a knuckle pin or knuckle thrower that is:

(1) Missing; or

(2) Inoperative; or

(e) The car has a coupler retainer pin lock that is—

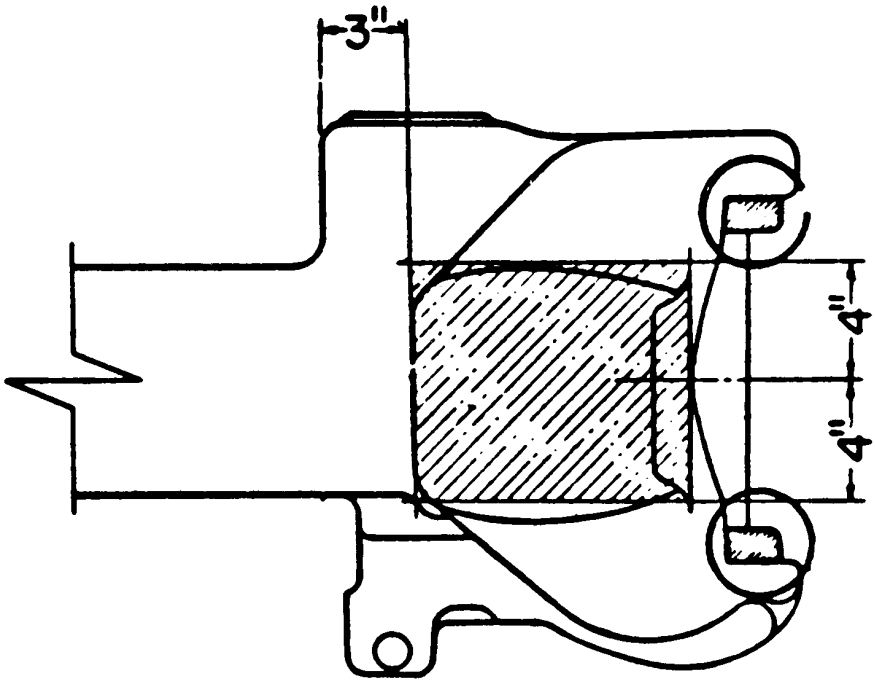

Figure 2

(1) Missing; or
(2) Broken; or
(f) The car has a coupler with any of the following conditions:
(1) The locklift is inoperative;
(2) The coupler assembly does not have anticreep protection to prevent unintentional unlocking of the coupler lock; or
(3) The coupler lock is—
(i) Missing;
(ii) Inoperative;
(iii) Bent;
(iv) Cracked; or
(v) Broken.

§ 215.125 Defective uncoupling device.

A railroad may not place or continue in service a car, if the car has an uncoupling device without sufficient vertical and lateral clearance to prevent—
(a) Fouling on curves; or
(b) Unintentional uncouplings.

§ 215.127 Defective draft arrangement.

A railroad may not place or continue in service a car, if—
(a) The car has a draft gear that is inoperative;
(b) The car has a broken yoke;
(c) An end of car cushioning unit is—
(1) Leaking clearly formed droplets; or
(2) Inoperative;
(d) A vertical coupler pin retainer plate—
(1) Is missing (except by design); or
(2) Has a missing fastener;
(e) The car has a draft key, or draft key retainer, that is—
(1) Inoperative; or
(2) Missing; or

(f) The car has a missing or broken follower plate.

§ 215.129 Defective cushioning device.

A railroad may not place or continue in service a car if it has a cushioning device that is—

(a) Broken;

(b) Inoperative; or

(c) Missing a part—

unless its sliding components have been effectively immobilized.

Subpart C—Restricted Equipment

§ 215.201 Scope.

This subpart contains requirements restricting the use of certain railroad freight cars.

215.203 Restricted cars.

(a) This section restricts the operation of any railroad freight car that is—

(1) More than 50 years old, measured from the date of original construction;

(2) Equipped with any design or type component listed in appendix A to this part; or

(3) Equipped with a Duryea underframe constructed before April 1, 1950, except for a caboose which is operated as the last car in a train.

(b) A railroad may not place or continue in service a railroad freight car described in paragraph (a) of this section, except under conditions approved by the Federal Railroad Administrator.

(c) A railroad may petition the Administrator to continue in service a car described in paragraph (a) of this section. Each petition shall be

(1) Be submitted not less than 90 days before the car is to be operated;

(2) Be submitted in triplicate; and

(3) State or describe the following:

(i) The name and principal business address of the petitioning railroad.

(ii) The name and address of the entity that controls the operation and maintenance of the car involved.

(iii) The number, type, capacity, reporting marks, and car numbers of the cars, their condition, status, and age measured from the date of original construction.

(iv) The design, type component, or other item that causes the car to be restricted.

(v) The maximum load the cars would carry.

(vi) The maximum speed at which the cars would be operated.

(vii) That each car has been examined and found to be safe to operate under the conditions set forth in the petition.

(viii) The territorial limits within which the cars are to be operated and the name of each railroad that will receive the cars in interchange.

Subpart D—Stenciling

§ 215.301 General.

The railroad or private car owner reporting mark, the car number, and built date shall be stenciled, or otherwise displayed, in clearly legible letters and numbers not less than seven inches high, except those of the built date which shall not be less than one inch high:

(a) On each side of each railroad freight car body; and

(b) In the case of a tank car, in any location that is visible to a person walking at track level beside the car.

§ 215.303 Stenciling of restricted cars.

(a) Each restricted railroad freight car that is described in § 215.205(a) of this part shall be stenciled, or marked—

(1) In clearly legible letters; and

(2) In accordance with paragraphs (b) and (c) of this section.

(b) The letter ''R'' shall be—

(1) Placed immediately below or to the right of the car number;

(2) The same color as the reporting mark; and

(3) The same size as the reporting mark.

(c) The following terms, to the extent needed to completely indicate the basis for the restricted operation of the car, shall be placed on the car following the symbol ''R'' in letters not less than one inch high:

(1) Age.

(2) Coupler.

(3) Draft.

(4) Bearings.

(5) Truck.

(6) Underframe.

(7) Wheels.

(8) Yoke.

§ 215.305 Stenciling of maintenance-of-way equipment.

(a) Maintenance-of-way equipment (including self-propelled maintenance-of-way equipment) described in § 215.3(c)(3) shall be stenciled, or marked—

(1) In clearly legible letters; and

(2) In accordance with paragraph (b) of this section.

(b) The letters ''MW'' must be—

(1) At least 2 inches high; and

(2) Placed on each side of the car.

[44 FR 77340, Dec. 31, 1979, as amended at 45 FR 26711, Apr. 21, 1980]

APPENDIX A TO PART 215—RAILROAD FREIGHT CAR COMPONENTS

List of components whose use is restricted by § 215.203 of this part.

A. Air brakes:

The ''K'' type.

B. Axles:

1. Former AAR alternate standard tubular type.

2. Axle with letters ''RJ'' stamped on the end of the journal.

C. Couplers:

1. AAR type ''D'', top or bottom operated.

2. AAR type ''E'' with 5″ by 7″ shank.

D. Draft arrangement:

1. Miner FR–16 and FR–19–F draft gears.

2. Farlow draft attachment.

E. Plain journal bearings:

Cartridge type.

F. Roller bearings:

1. Nippon Sieko Kabushiki Kaish (NSK) size 6½″ by 12″ (marked ''AAR 11'').

2. Hyatt cylindrical bearing, all sizes (marked ''AAR 2'').

3. SKF ''Piggybacker'' spherical roller, size 6″ by 11″ (marked ''AAR 7'').

G. Trucks:

1. Arch bar type.

2. Truck with cast steel pedestal side frame, short wheel base, and no bolster.

H. Truck bolsters:

1. A bolster with one of the following pattern numbers listed according to manufacturer:

A.S.F.	Dresser (Symington)	Birdsboro	Lenoir car works
21183–B	BO 5234	1458 1468	CS–184.
21183–N	BO 5263 BO 7076	1471	CS–611.
21648–C	BO 7076–A		
22056–E	BO 7115		

2. Bolster cast before 1927.

3. Bolster without an identification mark or pattern number.

I. 1. Truck side frames:

A side frame with one of the following pattern numbers listed according to manufacturer:

A.S.F.	National castings	Buckeye	Dominion
7273	33793–1B	3–1776	TF–5100
7323		F–420	
21362 (cast prior to June 1941).			

Pittsburgh steel foundry	Scullin steel	Bettendorf	Canadian steel foundry
31673	42–CS–180	UT 456	26565
4–1862.			
3–1674	4665		
4–2045	4770		
12897	4942		
12921	5220		
21263	5364		
	5364–C		
	5364–E		
	5811–A		
	5869–B		
	6577–A		

2. Side frame cast before 1927.

3. Side frame without an identification mark or pattern number.

4. Side frame with an ''I'', ''T'', or ''L'' section compression or tension member.

J. Wheels:

1. Cast iron wheel.

2. Cast steel wheel marked ''AAR X–2.''

3. Southern cast steel wheel manufactured before May 7, 1958.

4. Griffin, three-riser cast steel wheel, ball rim design, 70-ton capacity.

5. Griffin, three-riser cast steel wheel, two-wear, 70- and 50-ton capacity, 33 inch, (marked X–5 or CS–2).

6. Wrought steel wheel manufactured before 1927, as indicated by marking on wheel.

7. Cast steel wheel marked AAR X–4.

8. Davis cast steel wheel.

9. One-wear, 70-ton Southern (ABEX) U1 cast steel wheels dated May 7, 1958 through December 31, 1969.

A. Wheels dated May 7, 1958, to January 1, 1964, are marked with the symbol ''70T'' cast on the back of the wheel plate; they are not marked ''U–1.''

B. Wheels dated January 1, 1964 through December 31, 1969, are marked with the symbols ''CJ–33'' and ''U–1'' *or* ''70T'' and ''U–1'' cast on the back of the wheel plate.

K. Yokes:

1. Riveted type.

2. Keyless type.

3. Vertical key type.

APPENDIX B TO PART 215—SCHEDULE OF CIVIL PENALTIES [1]

Section	Violation	Willful violation
Subpart A—General:		
215.9 Movement for repair:		
(a), (c)	(1)	(1)
(b)	$2,500	$5,000
215.11 Designation of qualified persons	2,500	5,000
215.13 Pre-departure inspection	2,000	4,000
Subpart B—Freight Car Components:		
215.103 Defective wheel:		
(a) Flange thickness of:		
(1) 7/8″ or less but more than 13/16″	2,500	5,000
(2) 13/16″ or less	5,000	7,500
(b) Flange height of:		
(1) 1½″ or greater but less than 1⅝″	2,500	5,000
(2) 1⅝″ or more	5,000	7,500
(c) Rim thickness of:		
(1) 11/16″ or less but more than ⅝″	2,500	5,000
(2) ⅝″ or less	5,000	7,500
(d) Wheel rim, flange plate hub width:		
(1) Crack of less than 1″	2,500	5,000
(2) Crack of 1″ or more	5,000	7,500
(3) Break	5,000	7,500
(e) Chip or gouge in flange of:		
(1) 1½″ or more but less than 1⅝″ in length; and ½″ or more but less than ⅝″ in width.	2,500	5,000
(2) 1⅝″ or more in length; or ⅝″ or more in width	5,000	7,500
(f) Slid flat or shelled spot(s):		
(1)(i) One spot more than 2½″, but less than 3″, in length	2,500	5,000
(ii) One spot 3″ or more in length	5,000	7,500
(2)(i) Two adjoining spots each of which is more than 2″ but less than 2½″ in length	2,500	5,000
(ii) Two adjoining spots both of which are at least 2″ in length, if either spot is 2½″, or more in length	5,000	7,500

APPENDIX B TO PART 215—SCHEDULE OF CIVIL PENALTIES [1]—Continued

Section	Violation	Willful violation
(g) Loose on axle	6,000	8,500
(h) Overheated; discoloration extending:		
(1) more than 4″ but less than 4½″	2,500	5,000
(2) 4½″ or more	5,000	7,500
(i) Welded	5,000	7,500
215.105 Defective axle:		
(a)(1) Crack of 1″ or less.	2,500	5,000
(2) Crack of more than 1″	5,000	7,500
(3) Break	6,000	8,500
(b) Gouge in surface that is between the wheel seats and is more than ⅛″ in depth	2,500	5,000
(c) End collar with crack or break	2,500	5,000
(d) Journal overheated	5,000	7,500
(e) Journal surface has: a ridge; a depression; a circumferential score; corrugation; a scratch; a continuous streak; pitting; rust; or etching	2,500	5,000
215.107 Defective plain bearing box: general:		
(a)(1) No visible free oil	1,500	3,000
(2) Lubricating pad dry (no expression of oil observed when pad is compressed)	5,000	7,500
(b) Box lid is missing, broken, or open except to receive servicing	1,000	2,000
(c) Contains foreign matter that can be expected to damage the bearing or have a detrimental effect on the lubrication of the journal and bearing	2,500	5,000
215.109 Defective plain bearing box: journal lubrication system:		
(a) Lubricating pad has a tear	1,000	2,000
(b) Lubricating pad scorched, burned, or glazed	2,500	5,000
(c) Lubricating pad contains decaying or deteriorating fabric	2,500	5,000
(d) Lubricating pad has an exposed center core or metal parts contacting the journal	2,500	5,000
(e) Lubricating pad is missing or not in contact with the journal	5,000	7,500

APPENDIX B TO PART 215—SCHEDULE OF CIVIL PENALTIES [1]—Continued

Section	Violation	Willful violation
215.111 Defective plain bearing:		
(a) Missing	5,000	7,500
(b) Bearing liner is loose or has piece broken out	2,500	5,000
(c) Overheated	5,000	7,500
215.113 Defective plain bearing wedge:		
(a) Missing	5,000	7,500
(b) Cracked	2,500	5,000
(c) Broken	5,000	7,500
(d) Not located in its design position	5,000	7,500
215.115 Defective roller bearing:		
(a)(1) Overheated	5,000	7,500
(2) (i) Cap screw(s) loose	2,500	5,000
(ii) Cap screw lock broken, missing or improperly applied	1,000	2,000
(3) Seal is loose or damaged, or permits leakage of lubricant	2,500	5,000
(b)(1) Not inspected and tested after derailment	2,500	5,000
(2) Not disassembled after derailment	2,500	5,000
(3) Not repaired or replaced after derailment	5,000	7,500
215.117 Defective roller bearing adapter:		
(a) Cracked or broken	2,500	5,000
(b) Not in its design position	5,000	7,500
(c) Worn on the crown	2,500	5,000
215.119 Defective freight car truck:		
(a)(1) A side frame or bolster that is broken	5,000	7,500
(2)(i) Side frame or bolster with crack of: ¼″ or more, but less than 1″	2,500	5,000
(ii) 1″ or more	5,000	7,500
(b) A snubbing device that is ineffective or missing	2,500	5,000
(c) Side bearing(s):		
(1) Assembly missing or broken	5,000	7,500
(2) In contact except by design	5,000	7,500
(3), (4) Total clearance at one end or at diagonally opposite sides of:.		
(i) more than ¾″ but not more than 1″	2,500	5,000
(ii) more than 1″	5,000	7,500

APPENDIX B TO PART 215—SCHEDULE OF CIVIL PENALTIES [1]—Continued

Section	Violation	Willful violation
(d) Truck spring(s):		
(1) Do not maintain travel or load	2,500	5,000
(2) Compressed solid	2,500	5,000
(3) Outer truck springs broken or missing:		
(i) Two outer springs	2,500	5,000
(ii) Three or more outer springs	5,000	7,500
(e) Truck bolster-center plate interference	5,000	7,500
(f) Brake beam shelf support worn	2,500	5,000
215.121 Defective car body:		
(a) Has less than 2½″ clearance from the top of rail	2,500	5,000
(b) Car center sill is:		
(1) Broken	6,000	8,500
(2) Cracked more than 6″	2,500	5,000
(3) Bent or buckled more than 2½″ in any 6′ length	2,500	5,000
(c) Coupler carrier that is broken or missing	2,500	5,000
(d) Car door not equipped with operative safety hangers	5,000	7,500
(e)(1) Center plate not properly secured	5,000	7,500
(2) Portion missing	2,500	5,000
(3) Broken	5,000	7,500
(4) Two or more cracks	2,500	5,000
(f) Broken sidesill, crossbearer, or body bolster	2,500	5,000
215.123 Defective couplers:		
(a) Shank bent out of alignment	1,000	2,000
(b) Crack in highly stressed junction area.	2,500	5,000
(c) Coupler knuckle broken or cracked	2,500	5,000
(d) Coupler knuckle pin or thrower that is missing or inoperative.	2,500	5,000
(e) Coupler retainer pin lock that is missing or broken	1,000	2,000
(f) Coupler with following conditions: locklift inoperative; no anticreep protection; or coupler lock is missing, inoperative, bent, cracked, or broken	2,500	5,000

APPENDIX B TO PART 215—SCHEDULE OF CIVIL PENALTIES [1]—Continued

Section	Violation	Willful violation
215.125 Defective uncoupling device	2,500	5,000
215.127 Defective draft arrangement:		
(a) Draft gear that is inoperative	2,500	5,000
(b) Yoke that is broken	2,500	5,000
(c) End of car cushioning unit is leaking or inoperative	2,500	5,000
(d) Vertical coupler pin retainer plate missing or has missing fastner	5,000	7,500
(e) Draft key or draft key retainer that is inoperative or missing	5,000	7,500
(f) Follower plate that is missing or broken	2,500	5,000
215.129 Defective cushioning device	2,500	5,000
Subpart C—Restricted equipment:		
215.203 Restricted cars	2,500	5,000
Subpart D—Stencilling:		
215.301 General	1,000	2,000
215.303 Stencilling of restricted cars	1,000	2,000
215.305 Stencilling of maintenance-of-way	1,000	2,000

[1] A penalty may be assessed against an individual only for a willful violation. Generally, when two or more violations of these regulations are discovered with respect to a single freight car that is placed or continued in service by a railroad, the appropriate penalties set forth above are aggregated up to a maximum of $10,000 per day. However, a failure to perform, with respect to a particular freight car, the predeparture inspection required by § 215.13 of this part will be treated as a violation separate and distinct from, and in addition to, any substantive violative conditions found on the car. The Administrator reserves the right to assess a penalty of up to $20,000 for any violation where circumstances warrant. See 49 CFR part 209, appendix A.

Failure to observe any condition for movement set forth in paragraphs (a) and (c) of § 215.9 will deprive the railroad of the benefit of the movement-for-repair provision and make the railroad and any responsible individuals liable for penalty under the particular regulatory section(s) concerning the substantive defect(s) present on the freight car at the time of movement.

Maintenance-of-way equipment not stenciled in accordance with § 215.305 is subject to all requirements of this part. See § 215.3(c)(3).

[53 FR 52925, Dec. 29, 1988]

APPENDIX C TO PART 215—FRA FREIGHT CAR STANDARDS DEFECT CODE

The following defect code has been established for use by FRA and State inspectors to report defects observed during inspection of freight cars. The purpose of the code is to establish a uniform language among FRA, States, and the railroad industry that will facilitate communication, recordkeeping, and statistical analyses. The code may not be substituted for the description of defects on bad order tags affixed to cars being moved for repair under § 215.9. However, it may be used to supplement that description.

INDEX

General

215.009 Improper Movement of Defective Cars.
215.011 Designation of Qualified Persons.
215.013 Failure to Perform a Pre-departure Inspection.
215.015 Failure to Complete Initial Periodic Inspection as Required.

FREIGHT CAR COMPONENTS

Suspension System

215.103 Defective Wheel.
215.105 Defective Axle.
215.107 Defective Plain Bearing Box: General.
215.109 Defective Plain Bearing Box: Journal Lubrication System.
215.111 Defective Plain Bearing.
215.113 Defective Plain Bearing Wedge.
215.115 Defective Roller Bearing.
215.117 Defective Roller Bearing Adapter.
215.119 Defective Freight Car Truck.

Car Bodies

215.121 Defective Car Body.

Draft System

215.123 Defective Couplers.
215.125 Defective Uncoupling Device.
215.127 Defective Draft Arrangement.
215.129 Defective Cushioning Device.

Restricted Equipment

215.203 Restricted Cars.

Stenciling

215.301 Improper Stenciling.
215.303 Improper Stenciling of Restricted Cars.
215.305 Improper Stenciling of Maintenance-of-Way Equipment.

Description of Defects

215.009 Failure to meet conditions for movement of defective cars for repairs.
215.011 Designation of Qualified Persons.
(A)(1) Railroad fails to designate persons qualified to inspect freight cars;
(2) Persons designated does not have knowledge and ability to inspect freight cars for compliance with the requirements of this part.
(B) Railroad fails to maintain written record of:
(1) Each designation in effect;
(2) The basis for this designation.
215.013 Failure to perform pre-departure inspection.
215.015 Periodic Inspection.

(A) Railroad fails to perform the periodic inspection as required by June 30, 1980 on:
(1) High utilization car built prior to December 31, 1977;
(2) Non-high utilization car built prior to December 31, 1971;
(B) A freight car improperly stenciled for periodic inspection.

215.103 Defective Wheel.
(A)(1) Flanges ⅞″ or less at ⅜″ above the tread;
(2) Flanges 13⁄16″ or less at ⅜″ above the tread;
(3) Flanges ¾″ or less at ⅜″ above the tread;
(B)(1) Flange is 1½″ or more from the tread to top of flange;
(2) Flange is 1⅝″ or more from the tread to top of flange;
(3) Flange is 1¾″.
(C)(1) Rim thickness is 11⁄16″ or less;
(2) Rim thickness is ⅝″ or less;
(3) Rim thickness is 9⁄16″ or less;
(D) Wheel cracked or broken in: (1) rim, (2) flange, (3) plate or (4) hub area.
(E) Wheel chip or gouge in flange:
(1) 1½″ length and ½″ in width or more;
(2) 1⅝″ length and ⅝″ in width or more;
(3) 1¾″ in length and ¾″ in width or more.
(F) Wheel has slid flat spot or shelled spot:
(1) 2½″ in length or more;
(2) Has two adjoining flat spots each of which is 2″ in length or greater;
(3) A single flat spot 3″ in length or more;
(4) Has two adjoining flat spots one of which is at least 2″ in length and the other is 2½″ or greater.
(G) Has a loose wheel.
(H) Overheated with discoloration extending: (1) More than 4″; (2) 4½″ or more.
(I) A welded wheel on car that is not moving for repairs.

215.105 Defective Axle.
(A) Cracked or broken:
(1) Cracked 1′ or less;
(2) Cracked greater than 1″;
(3) Broken or cracked with visible separation of metal.
(B) Gouge between wheel seats more than ⅛″ in depth:
(C) Broken or cracked end collar on plain bearing axle.
(D) Overheated journal.
(E) Surface of plain bearing journal or fillet has (1) ridge, (2) depression, (3) circumferential score, (4) corrugation, (5) scratch, (6) continuous streak, (7) pitting, (8) rust, (9) etching.

215.107 Defective plain bearing box.
(A) (1) Does not contain visible free oil;
(2) A journal box with dry pad.
(B) Lid is missing, broken or open except to receive service.
(C) Box has foreign matter that will damage bearing or prevent lubrication.

215.109 Defective plain bearing box: journal lubrication system.
(A) Pad torn half the length or width.
(B) Scorched, burned or glazed.
(C) Contains decaying or deteriorated fabric.
(D) Has exposed core except by design of metal parts in contact with journal.
(E)(1) Missing;
(2) Not in contact with journal.

215.111 Defective plain bearing.
(A) Missing, cracked or broken.
(B)(1) Bearing lining is loose;
(2) Broken out piece.
(C) Overheated as evidenced by:
(1) Melted babbit;
(2) Smoke from hot oil;
(3) Journal surface damaged.

215.113 Defective plain bearing wedge.
(A) Missing.
(B) Cracked.
(C) Broken.
(D) Not located in design position.

215.115 Defective roller bearing.
(A)(1) Overheated;
(2) Loose or missing cap screw;
(3) Roller bearing seal loose or damaged permitting loss of lubricant;
(4) Two or more missing cap screws.
(B)(1) Failure to inspect if involved in derailment;
(2) Failure to disassemble if required under this part;
(3) Failure to repair or replace defective roller bearings.

215.117 Defective roller bearing adapter.
(A) Cracked or broken.
(B) Not in design position.
(C) Worn excessively as shown on Figure 1 in relief portion.

215.119 Defective freight car trucks.
(A)(1) Side frame or bolster broken;
(2) Cracked ¼″ or more in transverse direction on tension member;
(3) Cracked 1″ or more in transverse direction on tension member.
(B) Has ineffective snubbing devices.
(C)(1) Missing or broken side bearing;
(2) Side bearing in contact except by design;
(3) Excessive side bearing clearance at one end of car;
(4) Excessive side bearing clearance on opposite sides at diagonal ends of car.
(D)(1) Has truck springs that will not maintain travel or load;
(2) Truck springs that are compressed solid;
(3) Has two springs broken in a cluster;
(4) Has three or more springs broken.
(E) Truck bolster and center plate interference preventing rotation.
(F) Has broken beam shelf supports worn so that shelf will not support beam.

215.121 Defective car body.
(A) Improper clearance—less than 2½″ from top of rail.

(B) Center sill is:
(1) Broken;
(2) Cracked more than 6″;
(3) Bent or buckled more than 2½″ in any 6-foot length.
(C) Coupler carrier is:
(1) Broken;
(2) Missing;
(3) Non-resilient when used with coupler with F head.
(D) Car door not equipped with operative safety hangers.
(E) If center plate:
(1) Any portion missing;
(2) Broken or cracked as defined in this part.
(F) Broken side sills, crossbars or body bolster.

215.123 Defective couplers.
(A) Coupler shank bent.
(B) Coupler cracked in highly stressed area of head and shank.
(C) Coupler knuckle broken.
(D) Coupler knuckle pin or knuckle throw:
(1) Missing;
(2) Inoperative.
(E) Coupler retainer pin lock:
(1) Missing;
(2) Broken.
(F)(1) Coupler locklift is inoperative;
(2) No anti-creep protection;
(3) Coupler lock is (i) missing, (ii) inoperative, (iii) bent, (iv) cracked or (v) broken.

215.125 Defective uncoupling device.
(A) Fouling on curve.
(B) Unintentional uncoupling.

215.127 Defective draft arrangement.
(A) Draft gear inoperative.
(B) Broken yoke.
(C) End of car cushioning unit:
(1) Leaking;
(2) Inoperative.
(D) Vertical coupler pin retainer plate:
(1) Missing;
(2) Has missing fastener.
(E) Draft key or key retainer:
(1) Inoperative;
(2) Missing.
(F) Follower plate missing or broken.

215.129 Defective cushioning device unless effectively immobilized.
(A) Broken.
(B) Inoperative.
(C) Missing parts.

215.203 Operating a restricted car, except under conditions approved by FRA.

Stenciling

215.301 Failure to stencil car number and built date on freight car as required.

215.303 Failure to stencil restricted car as required.

215.305 Failure to stencil maintenance-of-way equipment as required.

APPENDIX D TO PART 215—PRE-DEPARTURE INSPECTION PROCEDURE

At each location where a freight car is placed in a train and a person designated under §215.11 is not on duty for the purpose of inspecting freight cars, the freight car shall, as a minimum, be inspected for the imminently hazardous conditions listed below that are likely to cause an accident or casualty before the train arrives at its destination. These conditions are readily discoverable by a train crew member in the course of a customary inspection.

1. Car body:
(a) Leaning or listing to side.
(b) Sagging downward.
(c) Positioned improperly on truck.
(d) Object dragging below.
(e) Object extending from side.
(f) Door insecurely attached.
(g) Broken or missing safety appliance.
(h) Lading leaking from a placarded hazardous material car.
2. Insecure coupling.
3. Overheated wheel or journal.
4. Broken or extensively cracked wheel.
5. Brake that fails to release.
6. Any other apparent safety hazard likely to cause an accident or casualty before the train arrives at its destination.

[45 FR 26711, Apr. 21, 1980]

PART 216—SPECIAL NOTICE AND EMERGENCY ORDER PROCEDURES: RAILROAD TRACK, LOCOMOTIVE AND EQUIPMENT

Subpart A—General

Sec.
216.1 Application.
216.3 Definitions.
216.5 Delegation and general provisions.
216.7 Penalties.

Subpart B—Special Notice for Repairs

216.11 Special notice for repairs—railroad freight car.
216.13 Special notice for repairs—locomotive.
216.15 Special notice for repairs—track class.
216.17 Appeals.

Subpart C—Emergency Order—Track

216.21 Notice of track conditions.
216.23 Consideration of recommendation.
216.25 Issuance and review of emergency order.
216.27 Reservation of authority and discretion.

AUTHORITY: 45 U.S.C. 431, 432, and 438, as amended; 45 U.S.C. 22–34, as amended; Pub. L. 100–342; and 49 CFR 1.49 (c) and (m).

SOURCE: 41 FR 18657, May 6, 1976, unless otherwise noted.

Subpart A—General

§ 216.1 Application.

(a) This part applies, according to its terms, to each railroad which uses or operates a—

(1) Railroad freight car subject to part 215 of this chapter; or

(2) Locomotive subject to the Locomotive Inspection Act, as amended (45 U.S.C. 22–34).

(b) This part applies, according to its terms, to each railroad owning track subject to part 213 of this chapter.

[41 FR 18657, May 6, 1976, as amended at 54 FR 33229, Aug. 14, 1989]

§ 216.3 Definitions.

As used in this part—

(a) *FRA* means the Federal Railroad Administration.

(b) *State* means a State participating in investigative and surveillance activities under section 206 of the Federal Railroad Safety Act of 1970 (45 U.S.C. 435).

(c) *Inspector* includes FRA Regional Supervisors of Inspectors.

§ 216.5 Delegation and general provisions.

(a) The Administrator has delegated to the appropriate FRA and State personnel the authority to implement this part.

(b) Communications to the Administrator relating to the operation of this part should be submitted in triplicate to the Docket Clerk, Office of Chief Counsel, Federal Railroad Administration, Washington, DC 20590.

(c) The notices prescribed in §§ 216.11, 216.13, 216.15, and 216.21 of this part are issued on standard FRA forms indicating the particular subject matter. An inspector issues a notice by delivering it to an appropriate officer or agent immediately responsible for the affected locomotive, car, or track.

[41 FR 18657, May 6, 1976, as amended at 41 FR 43153, Sept. 30, 1976]

§ 216.7 Penalties.

Any person (including a railroad and any manager, supervisor, official, or other employee or agent of a railroad) who violates any requirement of this part or causes the violation of any such requirement is subject to a civil penalty of at least $250 and not more than $10,000 per violation, except that: Penalties may be assessed against individuals only for willful violations, and, where a grossly negligent violation or a pattern of repeated violations has created an imminent hazard of death or injury to persons, or has caused death or injury, a penalty not to exceed $20,000 per violation may be assessed. Each day a violation continues shall constitute a separate offense. See 49 CFR part 209, appendix A.

[53 FR 28599, July 28, 1988]

Subpart B—Special Notice for Repairs

§ 216.11 Special notice for repairs—railroad freight car.

(a) When an FRA Motive Power and Equipment Inspector or a State Equipment Inspector determines that a railroad freight car is not in conformity with the requirements of the FRA Freight Car Safety Standards set forth in part 215 of this chapter and that it is unsafe for further service, he notifies the railroad in writing that the car is not in serviceable condition. The Special Notice sets out and describes the defects that cause the car to be in unserviceable condition. After receipt of the Special Notice, the railroad shall remove the car from service until it is restored to serviceable condition. The car may not be deemed to be in serviceable condition until it complies with all applicable requirements of part 215 of this chapter.

(b) The railroad shall notify the Regional Director in writing when the equipment is returned to service, specifying the repairs completed.

(c) A railroad freight car subject to the notice prescribed in paragraph (a) of this section may be moved from the place where it was found to be unsafe for further service to the nearest available point where the car can be repaired, if such movement is necessary

to make such repairs. However, the movement is subject to the further restrictions of §215.9 of this chapter.

[41 FR 18657, May 6, 1976, as amended at 41 FR 43153, Sept. 30, 1976]

§216.13 Special notice for repairs—locomotive.

(a) When an FRA Motive Power and Equipment Inspector determines a locomotive is not safe to operate in the service to which it is put, whether by reason of nonconformity with the FRA Locomotive Inspection Regulations set forth in part 230 of this chapter or by reason of any other condition rendering the locomotive unsafe, he notifies the railroad in writing that the locomotive is not in serviceable condition. After receipt of the Special Notice, the railroad shall remove the locomotive from service until it is restored to serviceable condition. The locomotive may not be deemed to be in serviceable condition until it complies with all applicable requirements of part 230 of this chapter and until all additional deficiencies identified in the Special Notice have been corrected.

(b) The carrier shall notify the FRA Regional Director of Railroad Safety in writing when the locomotive is returned to service, specifying the repairs completed. The carrier officer or employee directly responsible for the repairs shall subscribe this writing under oath.

§216.15 Special notice for repairs—track class.

(a) When an FRA Track Inspector or State Track Inspector determines that track does not comply with the requirements for the class at which the track is being operated, as defined in the Track Safety Standards (49 CFR part 213), he notifies the railroad in writing that the track is being lowered in class and that operations over that track must comply with the speed limitations prescribed in part 213 of this chapter. The notice describes the conditions requiring the track to be lowered in class, specifies the exact location of the affected track segment, and states the highest class and corresponding maximum speeds at which trains may be operated over that track. After receipt of such notice, the speeds at which trains operate over that track shall not exceed the stated maximum permissible speeds, until such time as the track conforms to applicable standards for a higher class.

(b) The railroad shall notify the Regional Director in writing when the track is restored to a condition permitting operations at speeds authorized for a higher class, specifying the repairs completed.

[41 FR 43153, Sept. 30, 1976]

§216.17 Appeals.

(a) Upon receipt of a Special Notice prescribed in §216.11, 216.13, or 216.15, a railroad may appeal the decision of the Inspector to the FRA Regional Director of Railroad Safety for the region in which the notice was given. The appeal shall be made by letter or telegram. The FRA Regional Director assigns an inspector, other than the inspector from whose decision the appeal is being taken, to reinspect the railroad freight car, locomotive, or track. The reinspection will be made immediately. If upon reinspection, the railroad freight car or locomotive is found to be in serviceable condition, or the track is found to comply with the requirements for the class at which it was previously operated by the railroad, the FRA Regional Director or his agent immediately notifies the railroad, whereupon the restrictions of the Special Notice cease to be effective. If on reinspection the decision of the original inspector is sustained, the FRA Regional Director notifies the railroad that the appeal has been denied.

(b) A railroad whose appeal to the FRA Regional Director for Railroad Safety has been denied may, within thirty (30) days from the denial, appeal to the Administrator. After affording an opportunity for informal oral hearing, the Administrator may affirm, set aside, or modify, in whole or in part, the action of the FRA Regional Director.

(c) The requirements of a Special Notices issued under this subpart shall remain in effect and be observed by railroads pending appeal to a Regional Director for Railroad Safety or to the Administrator.

Subpart C—Emergency Order—Track

§ 216.21 Notice of track conditions.

(a) When an FRA Track Inspector or State Track Inspector finds track conditions which may require the issuance of an Emergency order removing the track from service under section 203, Public Law No. 91–458, 84 Stat. 972 (45 U.S.C. 432), the Inspector may issue a notice to the railroad owning the track. The notice sets out and describes the conditions found by the Inspector and specifies the location of defects on the affected track segment. The Inspector provides a copy to the FRA Regional Track Engineer and the FRA Regional Director for Railroad Safety.

(b) In the event the railroad immediately commences repairs on the affected track and so advises the FRA Regional Track Engineer, the Regional Track Engineer assigns an Inspector to reinspect the track immediately on the completion of repairs. If upon reinspection the Inspector determines that necessary repairs have been completed, he withdraws the Notice of Track Conditions.

§ 216.23 Consideration of recommendation.

Upon receipt of a Notice of Track Conditions issued under § 216.21, the FRA Regional Director for Railroad Safety prepares a recommendation to the Administrator concerning the issuance of an Emergency order removing the affected track from service. In preparing this recommendation, the FRA Regional Director considers all written or other material bearing on the condition of the track received from the railroad within three (3) calendar days of the issuance of the Notice of Track Conditions and also considers the report of the FRA Regional Track Engineer.

§ 216.25 Issuance and review of emergency order.

(a) Upon recommendation of the FRA Regional Director for Railroad Safety, the Administrator may issue an Emergency order removing from service track identified in the notice issued under § 216.21.

(b) As specified in section 203, Public Law No. 91–458, 84 Stat. 972 (45 U.S.C. 432), opportunity for review of the Emergency order is provided in accordance with section 554 of title 5 of the U.S.C. Petitions for such review must be submitted in writing to the Office of Chief Counsel, Federal Railroad Administration, Washington, DC 20590. Upon receipt of a petition, FRA will immediately contact the petitioner and make the necessary arrangements for a conference to be held at the earliest date acceptable to the petitioner. At this conference, the petitioner will be afforded an opportunity to submit facts, arguments and proposals for modification or withdrawal of the Emergency order. If the controversy is not resolved at this conference and a hearing is desired, the petitioner must submit a written request for a hearing within fifteen (15) days after the conference. The hearing will commence within fourteen (14) calendar days of receipt of the request and will be conducted in accordance with sections 556 and 575, title 5, U.S.C.

(c) Unless stayed or modified by the Administrator, the requirements of each Emergency order issued under this subpart shall remain in effect and be observed pending decision on a petition for review.

§ 216.27 Reservation of authority and discretion.

The FRA may issue Emergency orders concerning track without regard to the procedures prescribed in this subpart whenever the Administrator determines that immediate action is required to assure the public safety.

PART 217—RAILROAD OPERATING RULES

Subpart A—General

Sec.

217.1 Purpose.
217.3 Application.
217.4 Definitions.
217.5 Penalty.
217.7 Operating rules; filing and recordkeeping.
217.9 Program of operational tests and inspections; recordkeeping.
217.11 Program of instruction on operating rules; recordkeeping; electronic recordkeeping.

217.13 Information collection.
APPENDIX A TO PART 217—SCHEDULE OF CIVIL PENALTIES

AUTHORITY: 49 U.S.C. 20103, 20107, 20111, 20112, 21301, 21304, 21311 (1994) (formerly codified at 45 U.S.C. 431, 437, 438); Pub. L. 103–272 (1994); and 49 CFR 1.49(m).

SOURCE: 39 FR 41176, Nov. 25, 1974, unless otherwise noted.

Subpart A—General

§217.1 Purpose.

Through the requirements of this part, the Federal Railroad Administration learns the condition of operating rules and practices with respect to trains and other rolling equipment in the railroad industry, and each railroad is required to instruct its employees in operating practices.

§217.3 Application.

(a) Except as provided in paragraph (b) of this section, this part applies to railroads that operate trains or other rolling equipment on standard gage track which is part of the general railroad system of transportation.

(b) This part does not apply to—

(1) A railroad that operates only on track inside an installation which is not part of the general railroad system of transportation; or

(2) Rapid transit operations in an urban area that are not connected with the general railroad system of transportation.

[40 FR 2690, Jan. 15, 1975, as amended at 54 FR 33229, Aug. 14, 1989]

§217.4 Definitions.

As used in this part—

Class I, Class II, and *Class III* have the meaning assigned by regulations of the Interstate Commerce Commission (49 CFR part 1201; General Instructions 1–1), as those regulations may be revised and applied by order of the Commission (including modifications in class thresholds based revenue deflator adjustments).

Division headquarters means the location designated by the railroad where a high-level operating manager (*e.g.*, a superintendent, division manager, or equivalent), who has jurisdiction over a portion of the railroad, has an office.

System headquarters means the location designated by the railroad as the general office for the railroad system.

[59 FR 43070, Aug. 22, 1994]

§217.5 Penalty.

Any person (including a railroad and any manager, supervisor, official, or other employee or agent of a railroad) who violates any requirement of this part or causes the violation of any such requirement is subject to a civil penalty of at least $250 and not more than $10,000 per violation, except that: Penalties may be assessed against individuals only for willful violations, and, where a grossly negligent violation or a pattern of repeated violations has created an imminent hazard of death or injury to persons, or has caused death or injury, a penalty not to exceed $20,000 per violation may be assessed. Each day a violation continues shall constitute a separate offense. See appendix A to this part for a statement of agency civil penalty policy.

[53 FR 28599, July 28, 1988, as amended at 53 FR 52927, Dec. 29, 1988]

§217.7 Operating rules; filing and recordkeeping.

(a) On or before December 21, 1994, each Class I railroad, Class II railroad, the National Railroad Passenger Corporation, and each railroad providing commuter service in a metropolitan or suburban area that is in operation on November 21, 1994, shall file with the Federal Railroad Administrator, Washington, DC 20590, one copy of its code of operating rules, timetables, and timetable special instructions which were in effect on November 21, 1994. Each Class I railroad, each Class II railroad, and each railroad providing commuter service in a metropolitan or suburban area that commences operations after November 21, 1994, shall file with the Administrator one copy of its code of operating rules, timetables, and timetable special instructions before it commences operations.

(b) After November 21, 1994, each Class I railroad, each Class II railroad, the National Railroad Passenger Corporation, and each railroad providing commuter service in a metropolitan or suburban area shall file each new

amendment to its code of operating rules, each new timetable, and each new timetable special instruction with the Federal Railroad Administrator within 30 days after it is issued.

(c) On or after November 21, 1994, each Class III railroad and any other railroad subject to this part but not subject to paragraphs (a) and (b) of this section shall keep one copy of its current code of operating rules, timetables, and timetable special instructions and one copy of each subsequent amendment to its code of operating rules, each new timetable, and each new timetable special instruction, at its system headquarters, and shall make such records available to representatives of the Federal Railroad Administration for inspection and copying during normal business hours.

[59 FR 43070, Aug. 22, 1994]

§ 217.9 Program of operational tests and inspections; recordkeeping.

(a) *Requirement to conduct operational tests and inspections.* Each railroad to which this part applies shall periodically conduct operational tests and inspections to determine the extent of compliance with its code of operating rules, timetables, and timetable special instructions in accordance with a written program retained at its system headquarters and at the division headquarters for each division where the tests are conducted.

(b) *Written program of operational tests and inspections.* On or after November 21, 1994, or 30 days before commencing operations, whichever is later, each railroad to which this part applies shall retain one copy of its current program for periodic performance of the operational tests and inspections required by paragraph (a) of this section and one copy of each subsequent amendment to such program. These records shall be retained at the system headquarters of the railroad and at the division headquarters for each division where the tests are conducted, for three calendar years after the end of the calendar year to which they relate. These records shall be made available to representatives of the Federal Railroad Administration for inspection and copying during normal business hours. The program shall—

(1) Provide for operational testing and inspection under the various operating conditions on the railroad;

(2) Describe each type of operational test and inspection adopted, including the means and procedures used to carry it out;

(3) State the purpose of each type of operational test and inspection;

(4) State, according to operating divisions where applicable, the frequency with which each type of operational test and inspection is conducted;

(5) Begin within 30 days after November 21, 1994, or the date of commencing operations, whichever is later; and

(6) Include a schedule for making the program fully operative within 210 days after it begins.

(c) *Records of individual tests and inspections.* Each railroad to which this part applies shall keep a record of the date, time, place, and result of each operational test and inspection that was performed in accordance with its program. Each record shall specify the officer administering the test and inspection and each employee tested. These records shall be retained at the system headquarters of the railroad and at the division headquarters for each division where the tests are conducted for one calendar year after the end of the calendar year to which they relate. These records shall be made available to representatives of the Federal Railroad Administration for inspection and copying during normal business hours.

(d) *Annual summary on operational tests and inspections.* Before March 1 of each calendar year, each railroad to which this part applies, except for a railroad with less than 400,000 total manhours, shall retain, at each of its division headquarters and at the system headquarters of the railroad, one copy of a written summary of the following with respect to its previous year's activities: The number, type, and result of each operational test and inspection, stated according to operating divisions where applicable, that was conducted as required by paragraphs (a) and (b) of this section. These records shall be retained for three calendar years after the end of the calendar year to which they relate and

shall be made available to representatives of the Federal Railroad Administration for inspection and copying during normal business hours.

(e) *Electronic recordkeeping.* Each railroad to which this part applies is authorized to retain by electronic recordkeeping the information prescribed in paragraphs (b) through (d) of this section, provided that all of the following conditions are met:

(1) The railroad adequately limits and controls accessibility to such information retained in its electronic database system and identifies those individuals who have such access;

(2) The railroad has a terminal at the system headquarters and at each division headquarters;

(3) Each such terminal has a desk-top computer (*i.e.*, monitor, central processing unit, and keyboard) and either a facsimile machine or a printer connected to the computer to retrieve and produce information in a usable format for immediate review by FRA representatives;

(4) The railroad has a designated representative who is authorized to authenticate retrieved information from the electronic system as true and accurate copies of the electronically kept records; and

(5) The railroad provides representatives of the Federal Railroad Administration with immediate access to these records for inspection and copying during normal business hours and provides printouts of such records upon request.

[39 FR 41176, Nov. 25, 1974, as amended at 59 FR 43070, Aug. 22, 1994]

§217.11 Program of instruction on operating rules; recordkeeping; electronic recordkeeping.

(a) To ensure that each railroad employee whose activities are governed by the railroad's operating rules understands those rules, each railroad to which this part applies shall periodically instruct each such employee on the meaning and application of the railroad's operating rules in accordance with a written program retained at its system headquarters and at the division headquarters for each division where the employee is instructed.

(b) On or after November 21, 1994, or 30 days before commencing operations, whichever is later, each railroad to which this part applies shall retain one copy of its current program for the periodic instruction of its employees as required by paragraph (a) of this section and one copy of each subsequent amendment to that program. The system headquarters of the railroad shall retain one copy of all these records; the division headquarters for each division where the employees are instructed shall retain one copy of all portions of these records that the division applies and enforces. These records shall be made available to representatives of the Federal Railroad Administration for inspection and copying during normal business hours. This program shall—

(1) Describe the means and procedures used for instruction of the various classes of affected employees;

(2) State the frequency of instruction and the basis for determining that frequency;

(3) Include a schedule for completing the initial instruction of employees who are already employed when the program begins;

(4) Begin within 30 days after November 21, 1994, or the date of commencing operations, whichever is later; and

(5) Provide for initial instruction of each employee hired after the program begins.

(c) Each railroad to which this part applies is authorized to retain by electronic recordkeeping its program for periodic instruction of its employees on operating rules provided that the requirements stated in §217.9(e)(1) through (5) of this part are satisfied.

[39 FR 41176, Nov. 25, 1974, as amended at 59 FR 43071, Aug. 22, 1994]

§217.13 Information collection.

(a) The information collection requirements in this part have been reviewed by the Office of Management and Budget pursuant to the Paperwork Reduction Act of 1980, Public Law 96–511, and have been assigned OMB control number 2130–0035.

(b) The information collection requirements are found in the following sections:

(1) Section 217.7.

(2) Section 217.9.

(3) Section 217.11.

[50 FR 7919, Feb. 27, 1985. Redesignated and amended at 59 FR 43071, Aug. 22, 1994]

APPENDIX A TO PART 217—SCHEDULE OF CIVIL PENALTIES [1]

Section	Violation	Willful violation
217.7 Operating rules:		
(a)	$2,500	$5,000
(b)	$2,000	$5,000
(c)	$2,500	$5,000
217.9 Operational tests and inspections:		
(a) Program	$5,000	$7,500
(b) Record of program	2,500	$5,000
(c) Record of tests and inspections	$5,000	$7,500
(d) Annual summary	$5,000	$7,500
217.11 Program of instruction on operating rules:		
(a)	$5,000	$7,500
(b)	$2,500	$5,000

[1] A penalty may be assessed against an individual only for a willful violation. The Administrator reserves the right to assess a penalty of up to $20,000 for any violation where circumstances warrant. See 49 CFR part 209, appendix A.

[59 FR 43071, Aug. 22, 1994]

PART 218—RAILROAD OPERATING PRACTICES

Subpart A—General

Sec.
218.1 Purpose.
218.3 Application.
218.5 Definitions.
218.7 Waivers.
218.9 Civil penalty.
218.11 Filing, testing, and instruction.

Subpart B—Blue Signal Protection of Workers

218.21 Scope.
218.22 Utility employee.
218.23 Blue signal display.
218.24 One-person crew.
218.25 Workers on a main track.
218.27 Workers on track other than main track.
218.29 Alternate methods of protection.
218.30 Remotely controlled switches.

Subpart C—Protection of Trains and Locomotives

218.31 Scope.
218.35 Yard limits.
218.37 Flag protection.
218.39 Hump operations.
218.41 Noncompliance with hump operations rule.

Subpart D—Prohibition Against Tampering With Safety Devices

218.51 Purpose.
218.53 Scope and definitions.
218.55 Tampering prohibition.
218.57 Responsibilities of individuals.
218.59 Responsibilities of railroads.
218.61 Authority to deactivate safety devices.

Subpart E—Protection of Occupied Camp Cars

218.71 Purpose and scope.
218.73 Warning signal display.
218.75 Methods of protection for camp cars.
218.77 Remotely controlled switches.
218.79 Alternative methods of protection.
218.80 Movement of occupied camp cars.
APPENDIX A TO PART 218—SCHEDULE OF CIVIL PENALTIES
APPENDIX B TO PART 218—STATEMENT OF AGENCY ENFORCEMENT POLICY ON BLUE SIGNAL PROTECTION FOR UTILITY EMPLOYEES
APPENDIX C TO PART 218—STATEMENT OF AGENCY ENFORCEMENT POLICY ON TAMPERING

AUTHORITY: 49 U.S.C. 20101 *et seq.;* and 49 CFR 1.49(m).

SOURCE: 44 FR 2175, Jan. 10, 1979, unless otherwise noted.

EDITORIAL NOTE: Nomenclature changes to part 218 appear at 58 FR 43292, Aug. 16, 1993.

Subpart A—General

§ 218.1 Purpose.

This part prescribes minimum requirements for railroad operating rules and practices. Each railroad may prescribe additional or more stringent requirements in its operating rules, timetables, timetable special instructions, and other special instructions.

§ 218.3 Application.

(a) Except as provided in paragraph (b) of this section, this part applies to railroads that operate rolling equipment on standard gage track which is part of the general railroad system of transportation.

(b) This part does not apply to—

(1) A railroad that operates only on track inside an installation which is not part of the general railroad system of transportation, or

(2) Rapid transit operations in an urban area that are not connected with

the general railroad system of transportation.

[44 FR 2175, Jan. 10, 1979, as amended at 53 FR 28599, July 28, 1988]

§218.5 Definitions.

Absolute block means a block in which no train is permitted to enter while it is occupied by another train.

Blue signal means a clearly distinguishable blue flag or blue light by day and a blue light at night. When attached to the operating controls of a locomotive, it need not be lighted if the inside of the cab area of the locomotive is sufficiently lighted so as to make the blue signal clearly distinguishable.

Camp car means any on-track vehicle, including outfit, camp, or bunk cars or modular homes mounted on flat cars used to house rail employees. It does not include wreck trains.

Car shop repair track area means one or more tracks within an area in which the testing, servicing, repair, inspection, or rebuilding of railroad rolling equipment is under the exclusive control of mechanical department personnel.

Controlling Locomotive means a locomotive arranged as having the only controls over all electrical, mechanical and pneumatic functions for one or more locomotives, including controls transmitted by radio signals if so equipped. It does not include two or more locomotives coupled in multiple which can be moved from more than one set of locomotive controls.

Designated crew member means an individual designated under the railroad's operating rules as the point of contact between a train or yard crew and a utility employee working with that crew.

Effective locking device when used in relation to a manually operated switch or a derail means one which is:

(1) Vandal resistant;

(2) Tamper resistant; and

(3) Capable of being locked and unlocked only by the class, craft or group of employees for whom the protection is being provided.

Flagman's signals means a red flag by day and a white light at night, and a specified number of torpedoes and fusees as prescribed in the railroad's operating rules.

Group of workers means two or more workers of the same or different crafts assigned to work together as a unit under a common authority and who are in communication with each other while the work is being done.

Interlocking limits means the tracks between the opposing home signals of an interlocking.

Locomotive means a self-propelled unit of equipment designed for moving other railroad rolling equipment in revenue service including a self-propelled unit designed to carry freight or passenger traffic, or both, and may consist of one or more units operated from a single control.

Locomotive servicing track area means one or more tracks, within an area in which the testing, servicing, repair, inspection, or rebuilding of locomotives is under the exclusive control of mechanical department personnel.

Main track means a track, other than an auxiliary track, extending through yards or between stations, upon which trains are operated by timetable or train order or both, or the use of which is governed by a signal system.

Rolling equipment includes locomotives, railroad cars, and one or more locomotives coupled to one or more cars.

Switch providing access means a switch which if traversed by rolling equipment could permit that rolling equipment to couple to the equipment being protected.

Train or yard crew means one or more railroad employees assigned a controlling locomotive, under the charge and control of one crew member; called to perform service covered by Section 2 of the Hours of Service Act; involved with the train or yard movement of railroad rolling equipment they are to work with as an operating crew; reporting and working together as a unit that remains in close contact if more than one employee; and subject to the railroad operating rules and program of operational tests and inspections required in §§217.9 and 217.11 of this chapter.

Utility employee means a railroad employee assigned to and functioning as a temporary member of a train or yard

crew whose primary function is to assist the train or yard crew in the assembly, disassembly or classification of rail cars, or operation of trains (subject to the conditions set forth in § 218.22 of this chapter).

Worker means any railroad employee assigned to inspect, test, repair, or service railroad rolling equipment, or their components, including brake systems. Members of train and yard crews are excluded except when assigned such work on railroad rolling equipment that is not part of the train or yard movement they have been called to operate (or been assigned to as ''utility employees''). Utility employees assigned to and functioning as temporary members of a specific train or yard crew (subject to the conditions set forth in § 218.22 of this chapter), are excluded only when so assigned and functioning.

NOTE: Servicing does not include supplying cabooses, locomotives, or passenger cars with items such as ice, drinking water, tools, sanitary supplies, stationery, or flagging equipment.

Testing does not include (i) visual observations made by an employee positioned on or alongside a caboose, locomotive, or passenger car; or (ii) marker inspections made in accordance with the provisions of § 221.16(b) of this chapter.

[58 FR 43292, Aug. 16, 1993, as amended at 60 FR 11049, Mar. 1, 1995]

§ 218.7 Waivers.

(a) A railroad may petition the Federal Railroad Administration for a waiver of compliance with any requirement prescribed in this part.

(b) Each petition for a waiver under this section must be filed in the manner and contain the information required by part 211 of this chapter.

(c) If the Administrator finds that waiver of compliance is in the public interest and is consistent with railroad safety, he may grant the waiver subject to any conditions he deems necessary. Notice of each waiver granted, including a statement of the reasons, therefore, is published in the FEDERAL REGISTER.

§ 218.9 Civil penalty.

Any person (including a railroad and any manager, supervisor, official, or other employee or agent of a railroad) who violates any requirement of this part or causes the violation of any such requirement is subject to a civil penalty of at least $250 and not more than $10,000 per violation, except that: Penalties may be assessed against individuals only for willful violations, and, where a grossly negligent violation or a pattern of repeated violations has created an imminent hazard of death or injury to persons, or has caused death or injury, a penalty not to exceed $20,000 per violation may be assessed. Each day a violation continues shall constitute a separate offense. See appendix A to this part for a statement of agency civil penalty policy.

[53 FR 28599, July 28, 1988, as amended at 53 FR 52928, Dec. 29, 1988]

§ 218.11 Filing, testing, and instruction.

The operating rules prescribed in this part, and any additional or more stringent requirements issued by a railroad in relation to the operating rules prescribed in this part, shall be subject to the provisions of part 217 of this chapter, Railroad Operating Rules: Filing, Testing, and Instruction.

Subpart B—Blue Signal Protection of Workers

§ 218.21 Scope.

This subpart prescribes minimum requirements for the protection of railroad employees engaged in the inspection, testing, repair, and servicing of rolling equipment whose activities require them to work on, under, or between such equipment and subjects them to the danger of personal injury posed by any movement of such equipment.

§ 218.22 Utility employee.

(a) A utility employee shall be subject to the Hours of Service Act, and the requirements for training and testing, control of alcohol and drug use, and hours of service record keeping provided for in parts 217, 219, and 228 of this chapter.

(b) A utility employee shall perform service as a member of only one train or yard crew at any given time. Service with more than one crew may be sequential, but not concurrent.

(c) A utility employee may be assigned to and serve as a member of a train or yard crew without the protection otherwise required by subpart D of part 218 of this chapter only under the following conditions:

(1) The train or yard crew is assigned a controlling locomotive that is under the actual control of the assigned locomotive engineer of that crew;

(2) The locomotive engineer is in the cab of the controlling locomotive, or, while the locomotive is stationary be replaced in the cab by another member of the same crew;

(3) The utility employee established communication with the crew by contacting the designated crew member on arriving at the train (as defined for the purpose of this section as one or more locomotives coupled, with or without cars) and before commencing any duties with the crew.

(4) Before each utility employee commences duties, the designated crew member shall provide notice to each crew member of the presence and identity of the utility employee. Once all crew members have acknowledged this notice, the designated crew member shall advise the utility employee that he or she is authorized to work as part of the crew. Thereafter, communication shall be maintained in such a manner that each member of the train or yard crew understands the duties to be performed and whether those duties will cause any crew member to go on, under, or between the rolling equipment; and

(5) The utility employee is performing one or more of the following functions: set or release hand brakes; couple or uncouple air hoses and other electrical or mechanical connections; prepare rail cars for coupling; set wheel blocks or wheel chains; conduct air brake tests to include cutting air brake components in or out and position retaining valves; inspect, test, install, remove or replace a rear end marking device or end of train device. Under all other circumstances a utility employee working on, under, or between railroad rolling equipment must be provided with blue signal protection in accordance with §§218.23 through 218.30 of this part.

(d) When the utility employee has ceased all work in connection with that train and is no longer on, under, or between the equipment, the utility employee shall notify the designated crew member. The designated crew member shall then provide notice to each crew member that the utility employee is being released from the crew. Once each crew member has acknowledged the notice, the designated crew member shall then notify the utility employee that he is released from the train or yard crew.

(e) Communications required by §218.22(c)(4) and (d) shall be conducted between the utility employee and the designated crew member. This communications shall be conducted either through direct verbal contact, by radio in compliance with part 220 of this chapter, or by oral telecommunication of equivalent integrity.

(f) No more than three utility employees may be attached to one train or yard crew at any given time.

(g) Any railroad employee who is not assigned to a train or yard crew, or authorized to work with a crew under the conditions set forth by paragraph (b) of this section, is a worker required to be provided blue signal protection in accordance with §§218.23 through 218.30 of this part.

(h) Nothing in this section shall affect the alternative form of protection specified in §221.16 of this chapter with respect to inspection of rear end marking devices.

[58 FR 43293, Aug. 16, 1993, as amended at 60 FR 11050, Mar. 1, 1995]

§218.23 Blue signal display.

(a) Blue signals displayed in accordance with §218.25, 218.27, or 218.29 signify that workers are on, under, or between rolling equipment. When so displayed—

(1) The equipment may not be coupled to;

(2) The equipment may not be moved, except as provided for in §218.29;

(3) Other rolling equipment may not be placed on the same track so as to reduce or block the view of a blue signal,

except as provided for in § 218.29 (a), (b) and (c); and

(4) Rolling equipment may not pass a displayed blue signal.

(b) Blue signals must be displayed in accordance with § 218.25, 218.27, or 218.29 by each craft or group of workers prior to their going on, under, or between rolling equipment and may only be removed by the same craft or group that displayed them.

§ 218.24 One-person crew.

(a) An engineer working alone as a one-person crew shall not perform duties on, under, or between rolling equipment, without blue signal protection that complies with § 218.27 or § 218.29, unless the duties to be performed are listed in § 218.22(c)(5) and the following protections are provided:

(1) Each locomotive in the locomotive engineer's charge is either:

(i) Coupled to the train or other railroad rolling equipment to be assisted; or

(ii) Stopped a sufficient distance from the train or rolling equipment to ensure a separation of at least 50 feet; and

(2) Before a controlling locomotive is left unattended, the one-member crew shall secure the locomotive as follows:

(i) The throttle is in the IDLE position;

(ii) The generator field switch is in the OFF position;

(iii) The reverser handle is removed (if so equipped);

(iv) The isolation switch is in the ISOLATE position;

(v) The locomotive independent (engine) brake valve is fully applied;

(vi) The hand brake on the controlling locomotive is fully applied (if so equipped); and

(vii) A bright orange engineer's tag (a tag that is a minimum of three by eight inches with the words ASSIGNED LOCOMOTIVE—DO NOT OPERATE) is displayed on the control stand of the controlling locomotive.

(b) When assisting another train or yard crew with the equipment the other crew was assigned to operate, a single engineer must communicate directly, either by radio in compliance with part 220 of this chapter or by oral telecommunication of equivalent integrity, with the crew of the train to be assisted. The crews of both trains must notify each other in advance of all moves to be made by their respective equipment. Prior to attachment or detachment of the assisting locomotive(s), the crew of the train to be assisted must inform the single engineer that the train is secured against movement. The crew of the train to be assisted must not move the train or permit the train to move until authorized by the single engineer.

[60 FR 11050, Mar. 1, 1995]

EFFECTIVE DATE NOTE: Section 218.24 was added at 60 FR 11050, Mar. 1, 1995, effective May 15, 1995. At 60 FR 30469, June 9, 1995, § 218.24 was suspended effective May 15, 1995.

§ 218.25 Workers on a main track.

When workers are on, under, or between rolling equipment on a main track:

(a) A blue signal must be displayed at each end of the rolling equipment; and

(b) If the rolling equipment to be protected includes one or more locomotives, a blue signal must be attached to the controlling locomotive at a location where it is readily visible to the engineman or operator at the controls of that locomotive.

(c) When emergency repair work is to be done on, under, or between a locomotive or one or more cars coupled to a locomotive, and blue signals are not available, the engineman or operator must be notified and effective measures must be taken to protect the workers making the repairs.

[44 FR 2175, Jan. 10, 1979, as amended at 48 FR 6123, Feb. 10, 1983]

§ 218.27 Workers on track other than main track.

When workers are on, under, or between rolling equipment on track other than main track—

(a) A blue signal must be displayed at or near each manually operated switch providing access to that track;

(b) Each manually operated switch providing access to the track on which the equipment is located must be lined against movement to that track and locked with an effective locking device; and

(c) The person in charge of the workers must have notified the operator of any remotely controlled switch that work is to be performed and have been informed by the operator that each remotely controlled switch providing access to the track on which the equipment is located has been lined against movement to that track and locked as prescribed in §218.30.

(d) If rolling equipment requiring blue signal protection as provided for in this section is on a track equipped with one or more crossovers, both switches of each crossover must be lined against movement through the crossover toward that rolling equipment, and the switch of each crossover that provides access to the rolling equipment must be protected in accordance with the provisions of paragraphs (a) and (b), or (c) of this section.

(e) If the rolling equipment to be protected includes one or more locomotives, a blue signal must be attached to the controlling locomotive at a location where it is readily visible to the engineman or operator at the controls of that locomotive.

§218.29 Alternate methods of protection.

Instead of providing blue signal protection for workers in accordance with §218.27, the following methods for blue signal protection may be used:

(a) When workers are on, under, or between rolling equipment in a locomotive servicing track area:

(1) A blue signal must be displayed at or near each switch providing entrance to or departure from the area;

(2) Each switch providing entrance to or departure from the area must be lined against movement to the area and locked with an effective locking device; and

(3) A blue signal must be attached to each controlling locomotive at a location where it is readily visible to the engineman or operator at the controls of that locomotive;

(4) If the speed within this area is resticted to not more than 5 miles per hour a derail, capable of restricting access to that portion of a track within the area on which the rolling equipment is located, will fulfill the requirements of a manually operated switch in compliance with paragraph (a)(2) of this section when positioned at least 50 feet from the end of the equipment to be protected by the blue signal, when locked in a derailing position with an effective locking device, and when a blue signal is displayed at the derail;

(5) A locomotive may be moved onto a locomotive servicing area track after the blue signal has been removed from the entrance switch to the area. However, the locomotive must be stopped short of coupling to another locomotive;

(6) A locomotive may be moved off of a locomotive servicing area track after the blue signal has been removed from the controlling locomotive to be moved and from the area departure switch;

(7) If operated by an authorized employee under the direction of the person in charge of the workers, a locomotive protected by blue signals may be repositioned within this area after the blue signal has been removed from the locomotive to be repositioned and the workers on the affected track have been notified of the movement; and

(8) Blue signal protection removed for the movement of locomotives as provided in paragraphs (a) (5) and (6) of this section must be restored immediately after the locomotive has cleared the switch.

(b) When workers are on, under, or between rolling equipment in a car shop repair track area:

(1) A blue signal must be displayed at or near each switch providing entrance to or departure from the area; and

(2) Each switch providing entrance to or departure from the area must be lined against movement to the area and locked with an effective locking device;

(3) If the speed within this area is restricted to not more than 5 miles per hour, a derail capable of restricting access to that portion of a track within the area on which the rolling equipment is located will fulfill the requirements of a manually operated switch in compliance with paragraph (a)(2) of this section when positioned at least 50 feet from the end of the equipment to be protected by the blue signal, when locked in a derailing position with an effective locking device and when a blue signal is displayed at the derail;

(4) If operated by an authorized employee under the direction of the person in charge of the workemen, a car mover may be used to reposition rolling equipment within this area after workers on the affected track have been notified of the movement.

(c) Except as provided in paragraphs (a) and (b) of this section, when workers are on, under, or between rolling equipment on any track, other than a main track:

(1) A derail capable of restricting access to that portion of the track on which such equipment is located, will fulfill the requirements of a manually operated switch when positioned no less than 150 feet from the end so such equipment; and

(2) Each derail must be locked in a derailing position with an effective locking device and a blue signal must be displayed at each derail.

(d) When emergency repair work is to be done on, under, or between a locomotive or one or more cars coupled to a locomotive, and blue signals are not available, the engineman or operator at the controls of that locomotive must be notified and effective measures must be taken to protect the workers making the repairs.

[44 FR 2175, Jan. 10, 1979, as amended at 48 FR 6123, Feb. 10, 1983]

§ 218.30 Remotely controlled switches.

(a) After the operator of the remotely controlled switches has received the notification required by § 218.27(c), he must line each remotely controlled switch against movement to that track and apply an effective locking device to the lever, button, or other device controlling the switch before he may inform the employee in charge of the workers that protection has been provided.

(b) The operator may not remove the locking device unless he has been informed by the person in charge of the workers that it is safe to do so.

(c) The operator must maintain for 15 days a written record of each notification which contains the following information:

(1) The name and craft of the employee in charge who provided the notification;

(2) The number or other designation of the track involved;

(3) The date and time the operator notified the employee in charge that protection had been provided in accordance with paragraph (a) of this section; and

(4) The date and time the operator was informed that the work had been completed, and the name and craft of the employee in charge who provided this information.

[44 FR 2175, Jan. 10, 1979, as amended at 48 FR 6123, Feb. 10, 1983]

Subpart C—Protection of Trains and Locomotives

§ 218.31 Scope.

This subpart prescribes minimum operating rule requirements for the protection of railroad employees engaged in the operation of trains, locomotives and other rolling equipment.

[42 FR 5065, Jan. 27, 1977]

§ 218.35 Yard limits.

(a) After August 1, 1977, yard limits must be designated by—

(1) Yard limit signs, and

(2) Timetable, train orders, or special instructions.

(b) After August 1, 1977, each railroad must have in effect an operating rule which complies with the requirements set forth below:

(1) The main tracks within yard limits may be used, clearing the time an approaching designated class train is due to leave the nearest station where time is shown. In case of failure to clear the time of designated class trains, protection must be provided as § 218.37. In yard limits where main tracks are governed by block signal system rules, protection as prescribed by § 218.37 is not required.

(2) Trains and engines, except designated class trains, within yard limits must move prepared to stop within onehalf the range of vision but not exceeding 20 m.p.h. unless the main track is known to be clear by block signal indications.

(3) Within yard limits, movements against the current of traffic on the main tracks must not be made unless authorized and protected by train

order, yardmaster, or other designated official and only under the operating restrictions prescribed in §218.35(b)(2).

(c) Each railroad shall designate in the operating rule prescribed under paragraph (b) of this section the class or classes of trains which shall have superiority on the main track within yard limits.

[42 FR 5065, Jan. 27, 1977]

§218.37 Flag protection.

(a) After August 1, 1977, each railroad must have in effect an operating rule which complies with the requirements set forth below:

(1) Except as provided in paragraph (a)(2) of this section, flag protection shall be provided—

(i) When a train is moving on the main track at less than one-half the maximum authorized speed (including slow order limits) in that territory, flag protection against following trains on the same track must be provided by a crew member by dropping off single lighted fusees at intervals that do not exceed the burning time of the fusee.

(ii) When a train is moving on the main track at more than one-half the maximum authorized speed (including slow order limits) in that territory under circumstances in which it may be overtaken, crew members responsible for providing protection will take into consideration the grade, curvature of track, weather conditions, sight distance and relative speed of his train to following trains and will be governed accordingly in the use of fusees.

(iii) When a train stops on main track, flag protection against following trains on the same track must be provided as follows: A crew member with flagman's signals must immediately go back at least the distance prescribed by timetable or other instructions for the territory, place at least two torpedoes on the rail at least 100 feet apart and display one lighted fusee. He may then return one-half of the distance to his train where he must remain until he has stopped the approaching train or is recalled. When recalled, he must leave one lighted fusee and while returning to his train, he must also place single lighted fusees at intervals that do not exceed the burning time of the fusee. When the train departs, a crew member must leave one lighted fusee and until the train resumes speed not less than one-half the maximum authorized speed (including slow order limits) in that territory, he must drop off single lighted fusees at intervals that do not exceed the burning time of the fusee.

(iv) When required by the railroad's operating rules, a forward crew member with flagman's signals must protect the front of his train against opposing movements by immediately going forward at least the distance prescribed by timetable or other instructions for the territory placing at least two torpedoes on the rail at least 100 feet apart, displaying one lighted fusee, and remaining at that location until recalled.

(v) Whenever a crew member is providing flag protection, he must not permit other duties to interfere with the protection of his train.

(2) Flag protection against following trains on the same track is not required if—

(i) The rear of the train is protected by at least two block signals;

(ii) The rear of the train is protected by an absolute block;

(iii) The rear of the train is within interlocking limits; or

(iv) A train order specifies that flag protection is not required.

(v) A railroad operates only one train at any given time.

(b) Each railroad shall designate by timetable or other instruction for each territory the specific distance which a crew member providing flag protection must go out in order to provide adequate protection for his train.

(c) Whenever the use of fusees is prohibited by a Federal, State or local fire regulation, each railroad operating within that jurisdiction shall provide alternate operating procedures to assure full protection of trains in lieu of flag protection required by this section.

[42 FR 5065, Jan. 27, 1977, as amended at 42 FR 38362, July 28, 1977]

§218.39 Hump operations.

After June 30, 1984, each railroad that operates a remote control hump yard

facility must have in effect an operating rule that adopts the following provisions in substance:

(a) When a train or engine service employee is required to couple an air hose or to adjust a coupling device and that activity will require that the employee place himself between pieces of rolling equipment located on a bowl track, the operator of any remotely controlled switch that provides access from the apex of the hump to the track on which the rolling equipment is located shall be notified;

(b) Upon such notification, the operator of such remotely controlled switch shall line it against movement to the affected bowl track and shall apply a locking or blocking device to the control for that switch; and

(c) The operator shall then notify the employee that the requested protection has been provided and shall remove the locking or blocking device only after being notified by the employee that protection is no longer required on that track.

(Sec. 202, 84 Stat. 971 (45 U.S.C. 431); sec. 1.49(m) of the regulations of the Secretary of Transportation (49 CFR 1.49(m))

[49 FR 6497, Feb. 22, 1984]

§ 218.41 Noncompliance with hump operations rule.

A person (including a railroad and any manager, supervisor, official, or other employee or agent of a railroad) who fails to comply with a railroad's operating rule issued pursuant to § 218.39 of this part is subject to a penalty, as provided in appendix A of this part.

[53 FR 52928, Dec. 29, 1988]

Subpart D—Prohibition Against Tampering With Safety Devices

SOURCE: 54 FR 5492, Feb. 3, 1989, unless otherwise noted.

§ 218.51 Purpose.

(a) The purpose of this subpart is to prevent accidents and casualties that can result from the operation of trains when safety devices intended to improve the safety of their movement have been disabled.

(b) This subpart does not prohibit intervention with safety devices that is permitted:

(1) Under the provisions of § 236.566 or § 236.567 of this chapter;

(2) Under the provisions of § 218.61 of this part; or

(3) Under the provisions of § 229.9 of this chapter, provided that when a locomotive is being operated under the provision of § 229.9(b) a designated officer has been notified of the defective alerter or deadman pedal at the first available point of communication.

[54 FR 5492, Feb. 3, 1989, as amended at 58 FR 36613, July 8, 1993]

§ 218.53 Scope and definitions.

(a) This subpart establishes standards of conduct for railroads and individuals who operate or permit to be operated locomotives equipped with one or more of the safety devices identified in paragraph (c) of this section.

(b) *Disable* means to unlawfully render a device incapable of proper and effective action or to materially impair the functioning of that device.

(c) *Safety device* means any locomotive-mounted equipment that is used either to assure that the locomotive operator is alert, not physically incapacitated, aware of and complying with the indications of a signal system or other operational control system or to record data concerning the operation of that locomotive or the train it is powering. See appendix B to this part for a statement of agency policy on this subject.

§ 218.55 Tampering prohibited.

Any individual who willfully disables a safety device is subject to a civil penalty as provided in appendix A of this part and to disqualification from performing safety-sensitive functions on a railroad if found unfit for such duties under the procedures provided for in 49 CFR part 209.

§ 218.57 Responsibilities of individuals.

Any individual who knowingly operates a train, or permits it to be operated, when the controlling locomotive of that train is equipped with a disabled safety device, is subject to a civil penalty as provided for in appendix A of this part and to disqualification

from performing safety-sensitive functions on a railroad if found to be unfit for such duties. See appendix B to this part for a statement of agency enforcement policy concerning violations of this section.

§218.59 Responsibilities of railroads.

Any railroad that operates a train when the controlling locomotive of a train is equipped with a disabled safety device is subject to a civil penalty as provided for in appendix A of this part.

§218.61 Authority to deactivate safety devices.

(a) For the purpose of this chapter, it is lawful to temporarily render a safety device incapable of proper or effective action or to materially impair its function if this action is taken as provided for in paragraph (b) or (c) of this section.

(b) If a locomotive is equipped with a device to assure that the operator is alert or not physically incapacitated, that device may be deactivated when:

(1) The locomotive is not the controlling locomotive;

(2) The locomotive is performing switching operations and not hauling cars in a manner that constitutes a train movement under part 232 of this chapter:

(3) The locomotive is dead-in-tow; or

(4) The locomotive is a mid-train slave unit being controlled by radio from a remote location.

(c) If a locomotive is equipped with a device to record data concerning the operation of that locomotive and/or of the train it is powering, that device may be deactivated only in accordance with the provisions of §229.135.

[54 FR 5492, Feb. 3, 1989, as amended at 58 FR 36613, July 8, 1993]

Subpart E—Protection of Occupied Camp Cars

SOURCE: 54 FR 39545, Sept. 27, 1989, unless otherwise noted.

§218.71 Purpose and scope.

This subpart prescribes minimum requirements governing protection of camp cars that house railroad employees. The rule does not apply to such cars while they are in a train.

§218.73 Warning signal display.

(a) Warning signals, *i.e.*, a white disk with the words ''Occupied Camp Car'' in black lettering during daylight hours and an illuminated white signal at night, displayed in accordance with §218.75, §218.77, or §218.79 signify that employees are in, around, or in the vicinity of camp cars. Once the signals have been displayed—

(1) The camp cars may not be moved for coupling to other rolling equipment or moved to another location;

(2) Rolling equipment may not be placed on the same track so as to reduce or block the view of a warning signal; and

(3) Rolling equipment may not pass a warning signal.

(b) Warning signals indicating the presence of occupied camp cars, displayed in accordance with §§218.75 and 218.79, shall be displayed by a designated occupant of the camp cars or that person's immediate supervisor. The signal(s) shall be displayed as soon as such cars are placed on the track, and such signals may only be removed by those same individuals prior to the time the cars are moved to another location.

§218.75 Methods of protection for camp cars.

When camp cars requiring protection are on either main track or track other than main track:

(a) A warning signal shall be displayed at or near each switch providing access to that track;

(b) The person in charge of the camp car occupants shall immediately notify the person responsible for directing train movements on that portion of the railroad where the camp cars are being parked;

(c) Once notified of the presence of camp cars and their location on main track or other than main track, the person responsible for directing train movements on that portion of the railroad where the camp cars are being parked shall take appropriate action to alert affected personnel to the presence of the cars;

(d) Each manually operating switch providing access to track on which the camp cars are located shall be lined against movement to that track and secured with an effective locking device and spiked; and

(e) Each remotely controlled switch providing access to the track on which the camp cars are located shall be protected in accordance with § 218.77.

§ 218.77 Remotely controlled switches.

(a) After the operator of the remotely controlled switch is notified that a camp car is to be placed on a particular track, he shall line such switch against movement to that track and apply an effective locking device applied to the lever, button, or other device controlling the switch before informing the person in charge of the camp car occupants that protection has been provided.

(b) The operator may not remove the locking device until informed by the person in charge of the camp car occupants that protection is no longer required.

(c) The operator shall maintain for 15 days a written record of each notification that contains the following information:

(1) The name and craft of the employee in charge who provided the notification;

(2) The number or other designation of the track involved;

(3) The date and time the operator notified the employee in charge that protection had been provided in accordance with paragraph (a) of this section; and

(4) The date and time the operator was informed that the work had been completed, and the name and craft of the employee in charge who provided this information.

(d) When occupied camp cars are parked on main track, a derail, capable of restricting access to that portion of the track on which such equipment is located, shall be positioned no less than 150 feet from the end of such equipment and locked in a derailing position with an effective locking device, and a warning signal must be displayed at the derail.

§ 218.79 Alternative methods of protection.

Instead of providing protection for occupied camp cars in accordance with § 218.75 or § 218.77, the following methods of protection may be used:

(a) When occupied camp cars are on track other than main track:

(1) A warning signal must be displayed at or near each switch providing access to or from the track;

(2) Each switch providing entrance to or departure from the area must be lined against movement to the track and locked with an effective locking device; and

(3) If the speed within this area is restricted to not more than five miles per hour, a derail, capable of restricting access to that portion of track on which the camp cars are located, will fulfill the requirements of a manually operated switch in compliance with paragraph (a)(2) of this section when positioned at least 50 feet from the end of the camp cars to be protected by the warning signal, when locked in a derailing position with an effective locking device, and when a warning signal is displayed at the derail.

(b) Except as provided in paragraph (a) of this section, when occupied camp cars are on track other than main track:

(1) A derail, capable of restricting access to that portion of the track on which such equipment is located, will fulfill the requirements of a manually operated switch when positioned no less than 150 feet from the end of such equipment; and

(2) Each derail must be locked in a derailing position with an effective locking device and a warning signal must be displayed at each derail.

§ 218.80 Movement of occupied camp cars.

Occupied cars may not be humped or flat switched unless coupled to a locomotive.

APPENDIX A TO PART 218—SCHEDULE OF CIVIL PENALTIES [1]

Section	Violation	Willful violation
Subpart B—Blue signal protection of workmen:		
218.22 Utility employees:		
(a) Employee qualifications	$5,000	$7,500
(b) Concurrent service	5,000	7,500
(c) Assignment conditions.		
(1) No controlling locomotive	5,000	7,500
(2) Empty cab	5,000	7,500
(3)(4) Improper communication	5,000	7,500
(5) Performing functions not listed	2,000	4,000
(d) Improper release of utility employee	2,000	4,000
(f) More than three utility employees with one crew	2,000	4,000
218.23 Blue signal display	5,000	7,500
218.24 One-person crew:		
(a)(1) Equipment not coupled or insufficiently separated	2,000	4,000
(a)(2) Unoccupied locomotive cab not secured	5,000	7,500
(b) Helper service	2,000	4,000
218.25 Workmen on a main track	5,000	7,500
218.27 Workmen on track other than main track:		
(a) Protection provided except that signal not displayed at switch	2,000	4,000
(b) through (e)	5,000	7,500
218.29 Alternate methods of protection:		
(a)(1) protection provided except that signal not displayed at switch	2,000	4,000
(a)(2) through (a)(8)	5,000	7,500
(b)(1) Protection provided except that signal not displayed at switch	2,000	4,000
(b)(2) through (b)(4)	5,000	7,500
(c) Use of derails	5,000	7,500
(d) Emergency repairs	5,000	7,500
218.30 Remotely controlled switches:		
(a) and (b)	5,000	7,500
(c)	1,000	2,000
Subpart C—Protection of trains and locomotives:		
218.35 Yard limits:		
(a) and (b)	5,000	7,500
(c)	1,000	2,000
218.37 Flag protection:		
(a)	5,000	7,500
(b) and (c)	5,000	7,500
218.39 Hump operations	5,000	7,500
218.41 Noncompliance with hump operations rule	5,000	7,500

APPENDIX A TO PART 218—SCHEDULE OF CIVIL PENALTIES [1]—Continued

Section	Violation	Willful violation
Subpart D—Prohibition against tampering with safety devices:		
218.55 Tampering		7,500
218.57 (i) Knowingly operating or permitting operation of disabled equipment	2,500	
(ii) Willfully operating or permitting operation of disabled equipment		5,000
218.59 Operation of disabled equipment	2,500	5,000

[1] Except as provided for in § 218.57, a penalty may be assessed against an individual only for a willful violation. The Administrator reserves the right to assess a penalty of up to $20,000 for any violation where the circumstances warrant. See 49 CFR part 209, appendix A.

[53 FR 52928, Dec. 29, 1988, as amended at 54 FR 5492, Feb. 3, 1989; 58 FR 43293, Aug. 16, 1993; 60 FR 11050, Mar. 1, 1995]

APPENDIX B TO PART 218—STATEMENT OF AGENCY ENFORCEMENT POLICY ON BLUE SIGNAL PROTECTION FOR UTILITY EMPLOYEES

The following examples of the application of the train or yard crew exclusion from required blue signal protection for utility employees are provided to clarify FRA's enforcement policy. In the first four examples, the utility employee is properly attached to and functioning as member of a train or yard crew and is excluded from blue signal protection, provided all the conditions specified in § 218.22 are met:

Example 1: A utility employee assists a train crew by adding or reducing railroad cars to or from the train. The utility employee may perform any duties which would normally be conducted by members of the train crew, i.e., setting or releasing handbrakes, coupling air hoses and other connections, prepare rail cars for coupling, and perform air brake tests.

Example 2: A utility employee is assigned to assist a yard crew for the purpose of classifying and assembling railroad cars. The yard crew onboard their locomotive arrives at the location in the yard where the work is to be performed. At that time, the utility employee may attach himself to the yard crew and commence duties as a member of that yard crew.

Example 3: A utility employee is assigned to inspect, test, remove and replace if necessary, a combination rear end marking device/end of train device on a through freight train. The utility employee attaches himself to the train crew after the arrival of the train and its crew at the location where this

work is to be conducted. He may then perform duties as a member of that crew.

Example 4: A railroad manager who properly attaches himself as a utility employee to a train or yard crew, in accordance with §218.22, may then function as a member of the train or yard crew under the exclusion provided for train and yard crews.

NOTE: In the last four examples, any railroad employee, including regularly assigned crew members, would need blue signal protection to perform the described function.

Example 5: Prior to the arrival of a through freight train, a utility employee installs an end-of-train device on one end of a block of railroad cars that are scheduled to be picked up by the freight train.

Example 6: A railroad employee attaches himself to a train or yard crew while the crew is in the ready room preparing to take charge of their train. Prior to the train crew leaving the ready room and taking charge of the equipment, the employee couples air hoses and other connections between the locomotives.

Example 7: A railroad employee is attached to a train crew after the train crew has taken charge of the train. It is necessary for the employee to perform a repair on a rail car, such as replacing a brake shoe, in addition to those duties normally performed by train or yard crew members.

Example 8: A train or yard crew, supplemented by three utility employees, has an assigned locomotive and train. The regular crew, including the engineer, has left the train to eat lunch. The utility employees have remained with the train and are coupling air hoses between rail cars in the train.

[58 FR 43293, Aug. 16, 1993]

APPENDIX C TO PART 218—STATEMENT OF AGENCY ENFORCEMENT POLICY ON TAMPERING

The Rail Safety Improvement Act of 1988 (Pub. L. 100–342, enacted June 22, 1988) (''RSIA'') raised the maximum civil penalties available under the railroad safety laws and made individuals liable for willful violations of those laws. Section 21 of the RSIA requires that FRA adopt regulations addressing three related but distinct aspects of problems that can occur when safety devices are tampered with or disabled. It requires that FRA make it unlawful for (i) any individual to willfully tamper with or disable a device; (ii) any individual to knowingly operate or permit to be operated a train with a tampered or disabled device; and (iii) any railroad to operate such a train.

Because the introduction of civil penalties against individuals brings FRA's enforcement of the rail safety laws into a new era and because the changes being introduced by this regulation are so significant, FRA believes that it is advisable to set forth the manner in which it will exercise its enforcement authority under this regulation.

SAFETY DEVICES COVERED BY THIS RULE

FRA has employed a functional description of what constitutes a safety device under this rule. FRA's wording effectively identifies existing equipment and is sufficiently expansive to cover equipment that may appear in the future, particularly devices associated with advanced train control systems currently undergoing research testing.

FRA has been advised by portions of the regulated community that its functional definition has some potential for confusing people who read the rule without the benefit of the preamble discussions concerning the meaning of this definition. Since this rule is specifically intended to preclude misconduct by individuals, FRA wants this rule to be easily comprehended by all who read it. To achieve that clarity, FRA has decide to specify which types of equipment it considers to be within the scope of this rule and provide some examples of equipment that is not covered. In addition, FRA is ready and willing to respond in writing to any inquiry about any other devices that a party believes are treated ambiguously under this rule. This regulation applies to a variety of devices including equipment known as ''event recorders,'' ''alerters,'' ''deadman controls,'' ''automatic cab signals,'' ''cab signal whistles,'' ''automatic train stop equipment,'' and ''automatic train control equipment.'' FRA does not consider the following equipment to be covered by this rule: Radios; monitors for end-of-train devices; bells or whistles that are not connected to alerters, deadman pedals, or signal system devices; fans for controlling interior temperature of locomotive cabs; and locomotive performance monitoring devices, unless they record data such as train speed and air brake operations. Although FRA considers such devices beyond the scope of the regulation, this does not imply that FRA condones the disabling of such devices. FRA will not hesitate to include such devices at a later date should instances of tampering with these devices be discovered. FRA does not currently perceive a need to directly proscribe tampering with such devices because there is no history of these devices being subjected to tampering.

SUBSEQUENT OPERATORS OF TRAINS WITH DISABLED DEVICES

Section 218.57 addresses instances in which one individual has tampered with a safety device and a second individual (a ''subsequent operator'') knowingly operates a train or permits it to be operated, notwithstanding the presence of the disabled or tampered-with unit. The most common occurrence addressed by this provision is the situation in

which a train crew encounters a locomotive with a safety device that has been tampered with prior to the crew's assuming responsibility for the locomotive. FRA has structured this provision and its attendant enforcement policy to reflect the fact that instances in which one individual encounters a locomotive that someone else has tampered with are relatively infrequent occurrences.

FRA's regulatory prohibition for subsequent operator conduct reflects the legal standard for individual culpability set forth in the RSIA. Under the relevant statutory standard (''knowingly operates or permits to be operated a train on which such devices have been tampered with or disabled by another person'')—now incorporated into §218.57—individuals could be held to a simple negligence standard of conduct, i.e., a standard of reasonable care under the circumstances. FRA's conclusion about the proper interpretation of the word ''knowingly'' stems from both normal canons of statutory construction and analysis of decisional law concerning the use of similar statutory constructs in the civil penalty context. It is also consistent with other Departmental interpretations of the word as used in similar contexts. (See 49 CFR 107.299, defining ''knowingly'' under the Hazardous Materials Transportation Act, 49 App. U.S.C. 1801 *et seq.*)

Under that statutory language, the responsible members of the crew could be culpable if either (1) due to their failure to exercise reasonable care, they failed to determine that the safety device was not functioning, or (2) having ascertained that the device was not functioning, still elected to operate the train. Similarly, railroad supervisors who permit or direct that a train with a disabled device be operated after having learned that the safety device is not functioning or after having failed to use reasonable care in the performance of their duties could also be subject to sanction.

However, as a matter of enforcement policy, application of a negligence standard in this particular context presently appears unwarranted. We have seen no evidence of an employee's negligent failure to detect another employee's tampering having caused a safety problem. FRA can effectively attack the known dimensions of the tampering problem by employing an enforcement policy that limits its enforcement actions to situations where individuals clearly had actual knowledge of the disabled device and intentionally operated the train notwithstanding that knowledge.

Therefore, FRA will not take enforcement action against an individual under §218.57 absent a showing of such actual knowledge of the facts. Actual, subjective knowledge need not be demonstrated. It will suffice to show objectively that the alleged violator must have known the facts based on reasonable inferences drawn from the circumstances. For example, it is reasonable to infer that a person knows about something plainly in sight on the locomotive he is operating. Also, unlike the case where willfulness must be shown (see FRA's statement of policy at 49 CFR part 209, appendix A), knowledge of or reckless disregard for the law need not be shown to make out a violation of §218.57. The knowledge relevant here is knowledge of the facts constituting the violation, not knowledge of the law.

Should FRA receive evidence indicating that a stricter enforcement policy is necessary to address the tampering problem, it will revise its enforcement policy to permit enforcement actions based only on a showing of the subsequent operator's negligent failure to detect the tampering, as the relevant provision of the RSIA permits it to do now. Any such change in enforcement policy will become effective only after publication of a revised version of this appendix.

[54 FR 5492, Feb. 3, 1989. Redesignated and amended at 58 FR 43293, Aug. 16, 1993]

PART 219—CONTROL OF ALCOHOL AND DRUG USE

Subpart A—General

Sec.
219.1 Purpose and scope.
219.3 Application.
219.5 Definitions.
219.7 Waivers.
219.9 Responsibility for compliance.
219.11 General conditions for chemical tests.
219.13 Preemptive effect.
219.15 [Reserved]
219.17 Construction.
219.19 Field Manual.
219.21 Information collection.
219.23 Railroad policies.

Subpart B—Prohibitions

219.101 Alcohol and drug use prohibited.
219.102 Prohibition on abuse of controlled substances.
219.103 Prescribed and over-the-counter drugs.
219.104 Responsive action.
219.105 Railroad's duty to prevent violations.
219.107 Consequences of unlawful refusal.

Subpart C—Post-Accident Toxicological Testing

219.201 Events for which testing is required.
219.203 Responsibilities of railroads and employees.
219.205 Sample collection and handling.
219.206 FRA access to breath test results.
219.207 Fatality.

219.209 Reports of tests and refusals.
219.211 Analysis and follow-up.
219.213 Unlawful refusals; consequences.

Subpart D—Testing for Cause

219.300 Mandatory reasonable suspicion testing.
219.301 Testing for reasonable cause.
219.302 Prompt sample collection; time limitation.
219.303 Alcohol test procedures and safeguards.
219.305 Urine test procedures and safeguards.

Subpart E—Identification of Troubled Employees

219.401 Requirement for policies.
219.403 Voluntary referral policy.
219.405 Co-worker report policy.
219.407 Alternate policies.

Subpart F—Pre-employment Tests

219.501 Pre-employment tests.
219.503 Notification; records.
219.505 Refusals.

Subpart G—Random Alcohol and Drug Testing Programs

219.601 Railroad random drug testing programs.
219.602 Administrator's determination of random drug testing rate.
219.603 Participation in drug testing.
219.605 Positive drug test results; procedures.
219.607 Railroad random alcohol testing programs.
219.608 Administrator's determination of random alcohol testing rate.
219.609 Participation in alcohol testing.
219.611 Test result indicating prohibited alcohol concentration; procedures.

Subpart H—Procedures and Safeguards for Urine Drug Testing and for Alcohol Testing

219.701 Standards for urine drug testing.
219.703 Drug testing procedures.
219.705 Drugs tested.
219.707 Review by MRO of urine drug testing results.
219.708 Employee requests for testing.
219.709 Retest.
219.711 Confidentiality of test results.
219.713 [Reserved]
219.715 Alcohol testing procedures.

Subpart I—Annual Report

219.801 Reporting alcohol misuse prevention program results in a management information system.
219.803 Reporting drug misuse prevention program results in a management information system.

Subpart J—Recordkeeping Requirements

219.901 Retention of breath alcohol testing records.
219.903 Retention of urine drug testing records.
219.905 Access to facilities and records.

APPENDIX A TO PART 219—SCHEDULE OF CIVIL PENALTIES
APPENDIX B TO PART 219—DESIGNATION OF LABORATORY FOR POST-ACCIDENT TOXICOLOGICAL TESTING
APPENDIX C TO PART 219—POST-ACCIDENT TESTING SAMPLE COLLECTION
APPENDIX D TO PART 219—DRUG TESTING MANAGEMENT INFORMATION SYSTEM (MIS) DATA COLLECTION FORM
APPENDIX D1 TO PART 219 [RESERVED]
APPENDIX D2 TO PART 219—DRUG TESTING MANAGEMENT INFORMATION SYSTEM (MIS) ''EZ'' DATA COLLECTION FORM
APPENDIX D3 TO PART 219—ALCOHOL TESTING MANAGEMENT INFORMATION SYSTEM (MIS) DATA COLLECTION FORM
APPENDIX D4 TO PART 219—ALCOHOL TESTING MANAGEMENT INFORMATION SYSTEM (MIS) ''EZ'' DATA COLLECTION FORM

AUTHORITY: 49 U.S.C. 20103, 20107, 20111, 20112, 20113, 20140, 21301, 21304; and 49 CFR 1.49(m).

SOURCE: 54 FR 53259, Dec. 27, 1989, unless otherwise noted.

EDITORIAL NOTE: Nomenclature changes to part 219 appear at 59 FR 7457, Feb. 15, 1994.

Subpart A—General

§ 219.1 Purpose and scope.

(a) The purpose of this part is to prevent accidents and casualties in railroad operations that result from impairment of employees by alcohol or drugs.

(b) This part prescribes minimum Federal safety standards for control of alcohol and drug use. This part does not restrict a railroad from adopting and enforcing additional or more stringent requirements not inconsistent with this part.

§ 219.3 Application.

(a) Except as provided in paragraphs (b) and (c), this part applies to—

(1) Railroads that operate rolling equipment on standard gage track which is part of the general railroad system of transportation; and

(2) Railroads that provide commuter or other short-haul rail passenger service in a metropolitan or suburban area (as described by section 202(e) of the Federal Railroad Safety Act of 1970, as amended).

(b)(1) This part does not apply to a railroad that operates only on track inside an installation which is not part of the general railroad system of transportation.

(2) Subparts D, E, F and G do not apply to a railroad that employs not more than 15 employees covered by the Hours of Service Act (45 U.S.C. 61–64b) and that does not operate on tracks of another railroad (or otherwise engage in joint operations with another railroad) except as necessary for purposes of interchange.

(3) Subpart I does not apply to a railroad that has fewer than 400,000 total manhours.

(c) Subparts E, F and G do not apply to operations of a foreign railroad conducted by covered service employees whose primary place of service (''home terminal'') for rail transportation services is located outside the United States. Such operations and employees are subject to subparts A, B, C, and D when operating in United States territory.

[54 FR 53259, Dec. 27, 1989, as amended at 59 FR 7457, Feb. 15, 1994]

§219.5 Definitions.

As used in this part—

Alcohol means the intoxicating agent in beverage alcohol, ethanol or other low molecular weight alcohols including methyl or isopropyl alcohol.

Alcohol concentration (or content) means the alcohol in a volume of breath expressed in terms of grams of alcohol per 210 liters of breath (as indicated by a breath test under this part) or grams of alcohol per 100 milliliters of whole blood.

Alcohol use means the consumption of any beverage, mixture or preparation, including any medication, containing alcohol.

Class I, ''Class II,'' and *''Class III''* have the meaning assigned by regulations of the Interstate Commerce Commission (49 CFR Part 1201; General Instructions 1–1), as those regulations may be revised and applied by order of the Commission (including modifications in class thresholds based revenue deflator adjustments).

Confirmation test means a second test, following a screening test with a result of .02 or greater, that provides quantitative data of alcohol concentration.

Consortium means an entity, including a group or association of employers or contractors, that provides alcohol testing as required by this part or other DOT alcohol testing regulation and that acts on behalf of the employers.

Controlled substance has the meaning assigned by 21 U.S.C. 802 and includes all substances listed on Schedules I through V as they may be revised from time to time (21 CFR parts 1301–1316).

Covered employee means a person who has been assigned to perform service subject to the Hours of Service Act (45 U.S.C. 61–64b) during a duty tour, whether or not the person has performed or is currently performing such service, and any person who performs such service. (An employee is not ''covered'' within the meaning of this part exclusively by reason of being an employee for purposes of section 2(a)(3) of the Hours of Service Act, as amended (45 U.S.C. 62(a)(3)).) For the purposes of pre-employment testing only, the term covered employee includes a person applying to perform covered service.

Co-worker means another employee of the railroad, including a working supervisor directly associated with a yard or train crew, such as a conductor or yard foreman, but not including any other railroad supervisor, special agent or officer.

DOT Agency means an agency (or ''operating administration'') of the United States Department of Transportation administering regulations requiring alcohol or controlled substance testing (14 CFR parts 61, 63, 65, 121 and 135; 49 CFR parts 199, 219, 382 and 654) in accordance with part 40 of this title.

Drug means any substance (other than alcohol) that has known mind or function-altering effects on a human subject, specifically including any psychoactive substance and including, but not limited to, controlled substances.

Field Manual refers to the document described in §219.19 of this subpart.

FRA means the Federal Railroad Administration, U.S. Department of Transportation.

FRA representative means the Associate Administrator for Safety, FRA, the Associate Administrator's delegate (including a qualified State inspector acting under part 212 of this chapter), the Chief Counsel, FRA, or the Chief Counsel's delegate.

Hazardous material means a commodity designated as a hazardous material by part 172 of this title.

Impact accident means a train accident (*i.e.*, a rail equipment accident involving damage in excess of the current reporting threshold, $6,300 for calendar years 1991 through 1996 and $6,500 for calendar year 1997) consisting of a head-on collision, a rear-end collision, a side collision (including a collision at a railroad crossing at grade), a switching collision, or impact with a deliberately-placed obstruction such as a bumping post. The following are not impact accidents:

(1) An accident in which the derailment of equipment causes an impact with other rail equipment;

(2) Impact of rail equipment with obstructions such as fallen trees, rock or snow slides, livestock, etc.; and

(3) Raking collisions caused by derailment of rolling stock or operation of equipment in violation of clearance limitations.

Independent with respect to a medical facility, means not under the ownership or control of the railroad and not operated or staffed by a salaried officer or employee of the railroad. The fact that the railroad pays for services rendered by a medical facility or laboratory, selects that entity for performing tests under this part, or has a standing contractual relationship with that entity to perform tests under this part or perform other medical examinations or tests of railroad employees does not, by itself, remove the facility from this definition.

Medical facility means a hospital, clinic, physician's office, or laboratory where toxicological samples can be collected according to recognized professional standards.

Medical practitioner means a physician or dentist licensed or otherwise authorized to practice by the state.

Medical Review Officer or *MRO* refers to a licensed physician designated by the railroad who is responsible for receiving laboratory results generated by the railroad's drug testing program (including testing mandated or authorized by this part), who has knowledge of substance abuse disorders, and who has appropriate medical training to interpret and evaluate an individual's positive test result (as reported by the laboratory) together with his or her medical history and any other relevant biomedical information.

NTSB means the National Transportation Safety Board.

Passenger train means a train transporting persons (other than employees, contractors or persons riding equipment to observe or monitor railroad operations) in intercity passenger service, commuter or other short-haul service, or for excursion or recreational purposes.

Positive rate means the number of positive results for random drug tests conducted under this part plus the number of refusals of random tests required by this part, divided by the total number of random drug tests conducted under this part plus the number of refusals of random tests required by this part.

Possess means to have on one's person or in one's personal effects or under one's control. However, the concept of possession as used in this part does not include control by virtue of presence in the employee's personal residence or other similar location off of railroad property.

Railroad means all forms of non-highway ground transportation that run on rails or electro-magnetic guideways, including:

(1) Commuter or other short-haul rail passenger service in a metropolitan or suburban area, as well as any commuter rail service which was operated by Consolidated Rail Corporation as of January 1, 1979, and

(2) High speed ground transportation systems that connect metropolitan areas, without regard to whether they use new technologies not associated with traditional railroads.

Such term does not include rapid transit operations within an urban area

that are not connected to the general railroad system of transportation.

Railroad property damage or *damage to railroad property* refers to damage to railroad property, including railroad on-track equipment, signals, track, track structures (including bridges and tunnels), or roadbed, including labor costs and all other costs for repair or replacement in kind. Estimated cost for replacement of railroad property shall be calculated as described in the FRA Guide for Preparing Accident/Incident Reports. (See 49 CFR 225.21.) However, replacement of passenger equipment shall be calculated based on the cost of acquiring a new unit for comparable service.

Refuse to submit means that a covered employee fails to provide a urine sample as required by 49 CFR part 40, without a genuine inability to provide a specimen (as determined by a medical evaluation), after he or she has received notice of the requirement to be tested in accordance with the provisions of this part, or engages in conduct that clearly obstructs the testing process.

Refuse to submit (to an alcohol test) means that a covered employee fails to provide adequate breath for testing without a valid medical explanation after he or she has received notice of the requirement to be tested in accordance with the provisions of this part, or engages in conduct that clearly obstructs the testing process.

Reportable injury means an inury reportable under part 225 of this title.

Reporting threshold means the amount specified in §225.19(e) of this chapter, as adjusted from time to time in accordance with appendix B to part 225 of this chapter. The accident reporting threshold for calendar years 1991 through 1996 is $6,300. The accident reporting threshold for calendar year 1997 is $6,500.

Screening test means an analytical procedure to determine whether a covered employee may have a prohibited concentration of alcohol in his or her system.

Supervisory employee means an officer, special agent, or other employee of the railroad who is not a co-worker and who is responsible for supervising or monitoring the conduct or performance of one or more employees.

Train, except as context requires, means a locomotive, or more than one locomotive coupled, with or without cars. (A locomotive is a self-propelled unit of equipment which can be used in train service.)

Train accident means a passenger, freight, or work train accident described in §225.19(c) of this chapter (a ''rail equipment accident'' involving damage in excess of the current reporting threshold, $6,300 in calendar years 1991 through 1996 and $6,500 in calendar year 1997), including an accident involving a switching movement.

Train incident means an event involving the movement of railroad on-track equipment that results in a casualty but in which railroad property damage does not exceed the reporting threshold.

Violation rate means the number of covered employees (as reported under §219.801 of this part) found during random tests given under this part to have an alcohol concentration of .04 or greater, plus the number of employees who refuse a random test required by this part, divided by the total reported number of employees in the industry given random alcohol tests under this part plus the total reported number of employees in the industry who refuse a random test required by this part.

[54 FR 53259, Dec. 27, 1989, as amended at 59 FR 7457, Feb. 15, 1994; 59 FR 62228, Dec. 2, 1994; 61 FR 37224, July 17, 1996; 61 FR 60634, Nov. 29, 1996; 61 FR 67490, Dec. 23, 1996]

§219.7 Waivers.

(a) A person subject to a requirement of this part may petition the Federal Railroad Administration for a waiver of compliance with such requirement.

(b) Each petition for waiver under this section must be filed in a manner and contain the information required by part 211 of this chapter.

(c) If the Administrator finds that waiver of compliance is in the public interest and is consistent with railroad safety, the Administrator may grant the waiver subject to any necessary conditions.

§219.9 Responsibility for compliance.

(a) Any person (including but not limited to a railroad; any manager, supervisor, official, or other employee or

agent of a railroad; any owner, manufacturer, lessor, or lessee of railroad equipment, track, or facilities; any independent contractor providing goods or services to a railroad; and any employee of such owner, manufacturer, lessor, lessee, or independent contractor) who violates any requirement of this part or causes the violation of any such requirement is subject to a civil penalty of at least $500 and not more than $10,000 per violation, except that: Penalties may be assessed against individuals only for willful violations; where a grossly negligent violation or a pattern of repeated violations has created an imminent hazard of death or injury, or has caused death or injury, a penalty not to exceed $20,000 per violation may be assessed; and the standard of liability for a railroad will vary depending upon the requirement involved. *See,* e.g., § 219.105, which shall be construed to qualify the responsibility of a railroad for the unauthorized conduct of an employee that violates § 219.101 or § 219.102 (while imposing a duty of due diligence to prevent such conduct). Each day a violation continues shall constitute a separate offense. See appendix A to this part for a statement of agency civil penalty policy.

(b)(1) In the case of joint operations, primary responsibility for compliance with this part with respect to determination of events qualifying for breath or body fluid testing under subparts C and D of this part shall rest with the host railroad, and all affected employees shall be responsive to direction from the host railroad consistent with this part. However, nothing in this paragraph shall restrict the ability of the railroads to provide for an appropriate assignment of responsibility for compliance with this part as among those railroads through a joint operating agreement or other binding contract. FRA reserves the right to bring an enforcement action for noncompliance with applicable portions of this part against the host railroad, the employing railroad, or both.

(2) Where an employee of one railroad is required to participate in breath or body fluid testing under subpart C or D and is subsequently subject to adverse action alleged to have arisen out of the required test (or alleged refusal thereof), necessary witnesses and documents available to the other railroad shall be made available to the employee on a reasonable basis.

(c) Any independent contractor or other entity that performs covered service for a railroad has the same responsibilities as a railroad under this part, with respect to its employees who perform covered service. The entity's responsibility for compliance with this part may be fulfilled either directly by that entity or by the railroad's treating the entity's employees who perform covered service as if they were its own employees for purposes of this part. The responsibility for compliance must be clearly spelled out in the contract between the railroad and the other entity or in another document. In the absence of such a clear delineation of responsibility, FRA will hold the railroad and the other entity jointly and severally liable for compliance.

[54 FR 53259, Dec. 27, 1989, as amended at 59 FR 7458, Feb. 15, 1994]

§ 219.11 General conditions for chemical tests.

(a) Any employee who performs covered service for a railroad shall be deemed to have consented to testing as required in subparts B, C, D, and G of this part; and consent is implied by performance of such service.

(b)(1) Each such employee shall participate in such testing, as required under the conditions set forth in this part by a representative of the railroad.

(2) In any case where an employee has sustained a personal injury and is subject to alcohol or drug testing under this part, necessary medical treatment shall be accorded priority over provision of the breath or body fluid sample(s). No employee who is unable to urinate normally (based on the judgment of a medical professional that catheterization would be required) as a result of a personal injury, resulting medical treatment, or renal failure shall be required to provide a urine sample. Nothing in this section shall

bar use of a urine sample made available as a result of catheterization undertaken for medical purposes, provided the circumstances of such collection are fully documented and the specimen is otherwise handled in accordance with the applicable requirements of this title.

(3) Failure to remain available following an accident or casualty as required by company rules (i.e., being absent without leave) shall be considered a refusal to participate in testing, without regard to any subsequent provision of samples.

(4) Tampering with a sample in order to prevent a valid test (e.g., through substitution, dilution or adulteration) constitutes a refusal to provide a sample.

(c) A covered employee who is required to be tested under subpart C or D and who is taken to a medical facility for observation or treatment after an accident or incident shall be deemed to have consented to the release to FRA of the following:

(1) The remaining portion of any body fluid sample taken by the treating facility within 12 hours of the accident or incident that is not required for medical purposes, together with any normal medical facility record(s) pertaining to the taking of such sample;

(2) The results of any laboratory tests for alcohol or any drug conducted by or for the treating facility on such sample; and

(3) The identity, dosage, and time of administration of any drugs administered by the treating facility prior to the time samples were taken by the treating facility or prior to the time samples were taken in compliance with this part.

(4) The results of any breath tests for alcohol conducted by or for the treating facility.

(d) An employee required to participate in body fluid testing under subpart C (post-accident toxicological testing) or testing subject to subpart H shall, if requested by the representative of the railroad or the medical facility (including under subpart H of this part, a non-medical contract collector), evidence consent to taking of samples, their release for toxicological analysis under pertinent provisions of this part, and release of the test results to the railroad's Medical Review Officer by promptly executing a consent form, if required by the medical facility. The employee is not required to execute any document or clause waiving rights that the employee would otherwise have against the employer, and any such waiver is void. The employee may not be required to waive liability with respect to negligence on the part of any person participating in the collection, handling or analysis of the specimen or to indemnify any person for the negligence of others. Any consent provided consistent with this section shall be construed to extend only to those actions specified herein.

(e) Nothing in this part shall be construed to authorize the use of physical coercion or any other deprivation of liberty in order to compel breath or body fluid testing.

(f) Any railroad employee who performs service for a railroad shall be deemed to have consented to removal of body fluid and/or tissue samples necessary for toxicological analysis from the remains of such employee, if such employee dies within 12 hours of an accident or incident described in subpart C as a result of such event. This consent is specifically required of employees not in covered service, as well as employees in covered service.

(g) Each supervisor responsible for covered employees (except a working supervisor within the definition of coworker under this part) shall be trained in the signs and symptoms of alcohol and drug influence, intoxication and misuse consistent with a program of instruction to be made available for inspection upon demand by FRA. Such a program shall, at a minimum provide information concerning the acute behavioral and apparent physiological effects of alcohol and the major drug groups on the controlled substances list. The program shall also provide training on the qualifying criteria for post-accident testing contained in subpart C of this part, and the role of the supervisor in post-accident collections described in subpart C

and appendix C of this part. The duration of such training shall be not less than 3 hours.

(h) Nothing in this subpart restricts any discretion available to the railroad to request or require that an employee cooperate in additional body fluid testing. However, no such testing may be performed on urine or blood samples provided under this part. For purposes of this paragraph, all urine from a void constitutes a single sample.

[54 FR 53259, Dec. 27, 1989, as amended at 59 FR 7458, Feb. 15, 1994]

§ 219.13 Preemptive effect.

(a) Under section 205 of the Federal Railroad Safety Act of 1970 (45 U.S.C. 434), issuance of these regulations preempts any State law, rule, regulation, order or standard covering the same subject matter, except a provision directed at a local hazard that is consistent with this part and that does not impose an undue burden on interstate commerce.

(b) FRA does not intend by issuance of these regulations to preempt provisions of State criminal law that impose sanctions for reckless conduct that leads to actual loss of life, injury or damage to property, whether such provisions apply specifically to railroad employees or generally to the public at large.

§ 219.15 [Reserved]

§ 219.17 Construction.

Nothing in this part—

(a) Restricts the power of FRA to conduct investigations under section 208 of the Federal Railroad Safety Act of 1970, as amended; or

(b) Creates a private right of action on the part of any person for enforcement of the provisions of this part or for damages resulting from noncompliance with this part.

§ 219.19 Field Manual.

(a) Recommended practice standards for breath testing under subpart D of this part, and related materials designed to assist the railroads in establishing programs for control of alcohol and drug use are contained in the FRA Alcohol and Drug Field Manual, which is revised from time to time by the Office of Safety, FRA.

(b) The Field Manual may be inspected at the Office of the Associate Administrator for Safety, FRA, 400 Seventh Street, SW., Washington, DC 20590. The Field Manual may be purchased at the National Technical Information Service, Order Department, 5285 Port Royal Road, Springfield, Virginia 22161.

§ 219.21 Information collection.

(a) The information collection requirements of this part have been reviewed by the Office of Management and Budget pursuant to the Paperwork Reduction Act of 1980 (44 U.S.C. 3501 *et seq.*) and have been assigned OMB control number 2130–0526.

(b) The information collection requirements are found in the following sections:

Section 219.7.
Section 219.23.
Section 219.104.
Section 219.201.
Section 219.203.
Section 219.205.
Section 219.207.
Section 219.209.
Section 219.211.
Section 219.213.
Section 219.303.
Section 219.307.
Section 219.309.
Section 219.401.
Section 219.403.
Section 219.405.
Section 219.407.
Section 219.501.
Section 219.503.
Section 219.601.
Section 219.605.
Section 219.701.
Section 219.703.
Section 219.705.
Section 219.707.
Section 219.709.
Section 219.711.
Section 219.713.

§ 219.23 Railroad policies.

(a) Whenever a breath or body fluid test is required of an employee under this part, the railroad shall provide clear and unequivocal written notice to the employee that the test is being required under Federal Railroad Administration regulations. Use of the mandated DOT form for urine drug testing

or breath analysis satisfies the requirements of this paragraph.

(b) Whenever a breath or body fluid test is required of an employee under this part, the railroad shall provide clear, unequivocal written notice of the basis or bases upon which the test is required (*e.g.*, reasonable suspicion, violation of a specified operating/safety rule enumerated in subpart D of this part, random selection, follow-up, etc.). Completion of the alcohol testing form or urine custody and control form indicating the basis of the test (prior to providing a copy to the employee) satisfies the requirement of this paragraph.

(c) Use of approved forms for mandatory post-accident toxicological testing under subpart C of this part provides the notifications required under this section with respect to such tests. Use of those forms for any other test is prohibited.

(d) Each railroad shall provide educational materials that explain the requirements of this part, and the railroad's policies and procedures with respect to meeting those requirements.

(1) The railroad shall ensure that a copy of these materials is distributed to each covered employee prior to the start of alcohol testing under the railroad's alcohol misuse prevention program and to each person subsequently hired for or transferred to a covered position.

(2) Each railroad shall provide written notice to representatives of employee organizations of the availability of this information.

(e) *Required content.* The materials to be made available to employees shall include detailed discussion of at least the following:

(1) The identity of the person designated by the railroad to answer employee questions about the materials.

(2) The classes or crafts of employees who are subject to the provisions of this part.

(3) Sufficient information about the safety-sensitive functions performed by those employees to make clear that the period of the work day the covered employee is required to be in compliance with this part is that period when the employee is on duty and is required to perform or is available to perform covered service.

(4) Specific information concerning employee conduct that is prohibited under subpart B of this part.

(5) In the case of a railroad utilizing the accident/incident and rule violation reasonable cause testing authority provided by this part, prior notice (which may be combined with the notice required by §§ 219.601(d)(1) and 219.607(d)(1)), to covered employees of the circumstances under which they will be subject to testing.

(6) The circumstances under which a covered employee will be tested under this part.

(7) The procedures that will be used to test for the presence of alcohol and controlled substances, protect the employee and the integrity of the testing processes, safeguard the validity of the test results, and ensure that those results are attributed to the correct employee.

(8) The requirement that a covered employee submit to alcohol and drug tests administered in accordance with this part.

(9) An explanation of what constitutes a refusal to submit to an alcohol or drug test and the attendant consequences.

(10) The consequences for covered employees found to have violated subpart B of this part, including the requirement that the employee be removed immediately from covered service, and the procedures under § 219.104.

(11) The consequences for covered employees found to have an alcohol concentration of .02 or greater but less than .04.

(12) Information concerning the effects of alcohol misuse on an individual's health, work, and personal life; signs and symptoms of an alcohol problem (the employee's or a coworker's); and available methods of evaluating and resolving problems associated with the misuse of alcohol, including utilization of the procedures set forth in subpart E of this part and the names, addresses, and telephone numbers of substance abuse professionals and counseling and treatment programs.

(f) *Optional provisions.* The materials supplied to employees may also include information on additional railroad

policies with respect to the use or possession of alcohol and drugs, including any consequences for an employee found to have a specific alcohol concentration, that are based on the railroad's authority independent of this part. Any such additional policies or consequences shall be clearly and obviously described as being based on independent authority.

[54 FR 53259, Dec. 27, 1989; 55 FR 22793, June 4, 1990, as amended at 59 FR 7458, Feb. 15, 1994]

Subpart B—Prohibitions

§ 219.101 Alcohol and drug use prohibited.

(a) *Prohibitions.* Except as provided in § 219.103—

(1) No employee may use or possess alcohol or any controlled substance while assigned by a railroad to perform covered service;

(2) No employee may report for covered service, or go or remain on duty in covered service while—

(i) Under the influence of or impaired by alcohol;

(ii) Having .04 or more alcohol concentration in the breath or blood; or

(iii) Under the influence of or impaired by any controlled substance.

(3) No employee may use alcohol for whichever is the lesser of the following periods:

(i) Within four hours of reporting for covered service; or

(ii) After receiving notice to report for covered service.

(4) No employee tested under the provisions of this part whose test result indicates an alcohol concentration of .02 or greater but less than .04 shall perform or continue to perform covered service functions for a railroad, nor shall a railroad permit the employee to perform or continue to perform covered service, until the start of the employee's next regularly scheduled duty period, but not less than eight hours following administration of the test.

(b) *Controlled substance.* ''Controlled substance'' is defined by § 219.5 of this part. Controlled substances are grouped as follows: Marijuana, narcotics (such as heroin and codeine), stimulants (such as cocaine and amphetamines), depressants (such as barbiturates and minor tranquilizers), and hallucinogens (such as the drugs known as PCP and LSD). Controlled substances include illicit drugs (Schedule I), drugs that are required to be distributed only by a medical practitioner's prescription or other authorization (Schedules II through IV, and some drugs on Schedule V), and certain preparations for which distribution is through documented over the counter sales (Schedule V only).

(c) *Railroad rules.* Nothing in this section restricts a railroad form imposing an absolute prohibition on the presence of alcohol or any drug in the body fluids of persons in its employ, whether in furtherance of the purpose of this part or for other purposes.

(d) *Construction.* This section shall not be construed to prohibit the presence of an unopened container of an alcoholic beverage in a private motor vehicle that is not subject to use in the business of the railroad; nor shall it be construed to restrict a railroad from prohibiting such presence under its own rules.

[54 FR 53259, Dec. 27, 1989, as amended at 59 FR 7459, Feb. 15, 1994]

§ 219.102 Prohibition on abuse of controlled substances.

On and after October 2, 1989, no employee who performs covered service may use a controlled substance at any time, whether on duty or off duty, except as permitted by § 219.103 of this subpart.

§ 219.103 Prescribed and over-the-counter drugs.

(a) This subpart does not prohibit the use of a controlled substance (on Schedule II through V of the controlled substance list) prescribed or authorized by a medical practitioner, or possession incident to such use, if—

(1) The treating medical practitioner or a physician designated by the railroad has made a good faith judgment, with notice of the employee's assigned duties and on the basis of the available medical history, that use of the substance by the employee at the prescribed or authorized dosage level is consistent with the safe performance of the employee's duties;

(2) The substance is used at the dosage prescribed or authorized; and

(3) In the event the employee is being treated by more than one medical practitioner, at least one treating medical practitioner has been informed of all medications authorized or prescribed and has determined that use of the medications is consistent with the safe performance of the employee's duties (and the employee has observed any restrictions imposed with respect to use of the medications in combination).

(b) This subpart does not restrict any discretion available to the railroad to require that employees notify the railroad of therapeutic drug use or obtain prior approval for such use.

§ 219.104 Responsive action.

(a) *Removal from covered service.* (1) If the railroad determines that an employee has violated § 219.101 or § 219.102, or the alcohol or controlled substances misuse rule of another DOT agency, the railroad shall immediately remove the employee from covered service and the procedures described in paragraphs (b) through (e) of this section shall apply.

(2) If an employee refuses to provide breath or a body fluid sample or samples when required to by the railroad under a mandatory provision of this part, the railroad shall immediately remove the employee from covered service, and the procedures described in paragraphs (b) through (e) of this section shall apply.

(3)(i) This section does not apply to actions based on breath or body fluid tests for alcohol or drugs that are conducted exclusively under authority other than that provided in this part (*e.g.*, testing under a company medical policy, for-cause testing policy wholly independent of subpart D of this part, or testing under a labor agreement).

(ii) This section and the information requirements listed in § 219.23 do not apply to applicants who refuse to submit to a pre-employment test or who have a pre-employment test with a result indicating either an alcohol concentration equal to or greater than .04, or the misuse of controlled substances.

(b) *Notice.* Prior to or upon withdrawing the employee from covered service under this section, the railroad shall provide notice of the reason for this action.

(c) *Hearing procedures.* (1) If the employee denies that the test result is valid evidence of alcohol or drug use prohibited by this subpart, the employee may demand and shall be provided an opportunity for a prompt post-suspension hearing before a presiding officer other than the charging official. This hearing may be consolidated with any disciplinary hearing arising from the same accident or incident (or conduct directly related thereto), but the presiding officer shall make separate findings as to compliance with §§ 219.101 and 219.102 of this part.

(2) The hearing shall be convened within the period specified in the applicable collective bargaining agreement. In the absence of an agreement provision, the employee may demand that the hearing be convened within 10 calendar days of the suspension or, in the case of an employee who is unavailable due to injury, illness, or other sufficient cause, within 10 days of the date the employee becomes available for hearing.

(3) A post-suspension proceeding conforming to the requirements of an applicable collective bargaining agreement, together with the provisions for adjustment of disputes under section 3 of the Railway Labor Act, shall be deemed to satisfy the procedural requirements of this paragraph.

(4) Nothing in this part shall be deemed to abridge any additional procedural rights or remedies not inconsistent with this part that are available to the employee under a collective bargaining agreement, the Railway Labor Act, or (with respect to employment at will) at common law with respect to the removal or other adverse action taken as a consequence of a positive test result in a test authorized or required by this part.

(5) Nothing in this part shall restrict the discretion of the railroad to treat an employee's denial of prohibited alcohol or drug use as a waiver of any privilege the employee would otherwise enjoy to have such prohibited alcohol or drug use treated as a non-disciplinary matter or to have discipline held in abeyance.

(d) *Return to covered service.* An employee who has been determined to have violated § 219.101 or § 219.102 or who refused to cooperate in a breath or body fluid test under this part shall not be returned to covered service unless the employee has—

(1) Been evaluated by a substance abuse professional to determine if the employee is affected by a psychological or physical dependence on alcohol or one or more controlled substances or by another identifiable and treatable mental or physical disorder involving misuse of alcohol or drugs as a primary manifestation;

(2) Been evaluated by a substance abuse professional to determine that the employee has properly followed the prescribed rehabilitation program; and

(3)(i) Presented a urine sample for testing under subpart H of this part that tested negative for controlled substances assayed (in the case of an employee who has been determined to have violated a prohibition of § 219.101 or § 219.102 regarding possession or misuse of controlled substances or who refused to provide a body fluid sample or samples when required to by the railroad under a mandatory provision of this part); or

(ii) Presented breath for testing under subpart H of this part that indicated an alcohol concentration of less than .02. (in the case of an employee who has been determined to have violated a prohibition of § 219.101 regarding possession or misuse of alcohol or who refused to provide breath when required to by the railroad under a mandatory provision of this part).

(4) An employee shall be required to present both a urine sample and breath for testing, as specified in this section and subpart H of this part, if the substance abuse professional determines that such testing is necessary as a condition for returning the particular employee to covered service.

(e) *Follow-up testing.* An employee returned to service under the above-stated conditions shall continue in any program of counseling or treatment deemed necessary by the substance abuse professional and shall be subject to unannounced follow-up tests administered by the railroad following the employee's return to duty. The number and frequency of such follow-up testing shall be determined by a substance abuse professional, but shall consist of at least six tests in the first 12 months following the employee's return to duty. Any such testing shall be performed in accordance with the requirements of 49 CFR part 40. Follow-up testing shall not exceed 60 months from the date of the employee's return to duty. The substance abuse professional may terminate the requirement for follow-up testing at any time after the first six tests have been administered, if the substance abuse professional determines that such testing is no longer necessary.

(1) If the employee has been determined to have violated a prohibition of § 219.101 or § 219.102 regarding possession or misuse of controlled substances, or if the employee refused to provide a body fluid sample or samples when required to by the railroad under a mandatory provision of this part, the employee shall be subject to follow-up testing as specified in this section. Such testing shall be for controlled substances, but may include testing for alcohol as well, if the substance abuse professional determines that alcohol testing is necessary for the particular employee.

(2) If the employee has been determined to have violated a prohibition of § 219.101 regarding possession or misuse of alcohol, or if the employee refused to provide breath when required to by the railroad under a mandatory provision of this part, the employee shall be subject to follow-up testing as specified in this section. Such testing shall be for alcohol, but may include testing for controlled substances as well, if the substance abuse professional determines that drug testing is necessary for the particular employee.

(f) The railroad shall ensure that a substance abuse professional who determines that a covered employee requires assistance in resolving problems with alcohol or controlled substances misuse does not refer the employee to the substance abuse professional's private practice or to a person or organization from which the substance abuse professional receives remuneration or in which the substance abuse professional has a financial interest. This

paragraph does not prohibit a substance abuse professional from referring an employee for assistance provided through—

(1) A public agency, such as a state, county, or municipality;

(2) The railroad or a person under contract to provide treatment for alcohol problems on behalf of the railroad;

(3) The sole source of therapeutically appropriate treatment under the employee's health insurance program; or

(4) The sole source of therapeutically appropriate treatment reasonably accessible to the employee.

(g) Railroad compliance with the provisions of paragraphs (a), (d), and (e) of this section is mandatory beginning on January 1, 1995.

[54 FR 53259, Dec. 27, 1989; 55 FR 22793, June 4, 1990, as amended at 59 FR 7459, Feb. 15, 1994]

§ 219.105 Railroad's duty to prevent violations.

(a) A railroad may not, with actual knowledge, permit an employee to go or remain on duty in covered service in violation of the prohibitions of § 219.101 or § 219.102. As used in this section, the knowledge imputed to the railroad shall be limited to that of a railroad management employee (such as a supervisor deemed an ''officer,'' whether or not such person is a corporate officer) or a supervisory employee in the offending employee's chain of command.

(b) A railroad must exercise due diligence to assure compliance with § 219.101 and § 219.102 by each covered employee.

§ 219.107 Consequences of unlawful refusal.

(a) An employee who refuses to provide breath or a body fluid sample or samples when required to by the railroad under a mandatory provision of this part shall be deemed disqualified for a period of nine (9) months.

(b) Prior to or upon withdrawing the employee from covered service under this section, the railroad shall provide notice of the reason for this action, and the procedures described in § 219.104(c) shall apply.

(c) The disqualification required by this section shall apply with respect to employment in covered service by any railroad with notice of such disqualification.

(d) The requirement of disqualification for nine (9) months does not limit any discretion on the part of the railroad to impose additional sanctions for the same or related conduct.

(e) Upon the expiration of the 9-month period described in this section, a railroad may permit the employee to return to covered service only under the same conditions specified in § 219.104(d), and the employee shall be subject to follow-up tests, as provided by that section.

[59 FR 7460, Feb. 15, 1994]

Subpart C—Post-Accident Toxicological Testing

§ 219.201 Events for which testing is required.

(a) *List of events.* Except as provided in paragraph (b) of this section, post-accident toxicological tests shall be conducted after any event that involves one or more of the circumstances described in paragraphs (a)(1) through (4) of this section:

(1) *Major train accident.* Any train accident (*i.e.*, a rail equipment accident involving damage in excess of the current reporting threshold, $6,300 for calendar years 1991 through 1996 and $6,500 for calendar year 1997) that involves one or more of the following:

(i) A fatality;

(ii) Release of hazardous material lading from railroad equipment accompanied by—

(A) An evacuation; or

(B) A reportable injury resulting from the hazardous material release (*e.g.*, from fire, explosion, inhalation, or skin contact with the material); or

(iii) Damage to railroad property of $1,000,000 or more.

(2) *Impact accident.* An impact accident (*i.e.*, a rail equipment accident defined as an ''impact accident'' in § 219.5 of this part that involves damage in excess of the current reporting threshold, $6,300 for calendar years 1991 through 1996 and $6,500 for calendar year 1997) resulting in—

(i) A reportable injury; or

(ii) Damage to railroad property of $150,000 or more.

(3) *Fatal train incident.* Any train incident that involves a fatality to any on-duty railroad employee.

(4) *Passenger train accident.* Reportable injury to any person in a train accident (*i.e.*, a rail equipment accident involving damage in excess of the current reporting threshold, $6,300 for calendar years 1991 through 1996 and $6,500 for calendar year 1997) involving a passenger train.

(b) *Exceptions.* No test shall be required in the case of a collision between railroad rolling stock and a motor vehicle or other highway conveyance at a rail/highway grade crossing. No test shall be required in the case of an accident/incident the cause and severity of which are wholly attributable to a natural cause (e.g., flood, tornado or other natural disaster) or to vandalism, as determined on the basis of objective and documented facts by the railroad representative responding to the scene.

(c) *Good faith determinations.* (1)(i) The railroad representative responding to the scene of the accident/incident shall determine whether the accident/incident falls within the requirements of paragraph (a) of this section or is within the exception described in paragraph (b) of this section. It is the duty of the railroad representative to make reasonable inquiry into the facts as necessary to make such determinations. In making such inquiry, the railroad representative shall consider the need to obtain samples as soon as practical in order to determine the presence or absence of impairing substances reasonably contemporaneous with the accident/incident. The railroad representative satisfies the requirement of this section if, after making reasonable inquiry, the representative exercises good faith judgement in making the required determinations.

(ii) The railroad representative making the determinations required by this section shall not be a person directly involved in the accident/incident. This section does not prohibit consultation between the responding railroad representative and higher level railroad officials; however, the responding railroad representative shall make the factual determinations required by this section.

(iii) Upon specific request made to the railroad by the Associate Administrator for Safety, FRA (or the Associate Administrator's delegate), the railroad shall provide a report describing any decision by a person other than the responding railroad representative with respect to whether an accident/incident qualifies for testing. This report shall be affirmed by the decision maker and shall be provided to FRA within 72 hours of the request. The report shall include the facts reported by the responding railroad representative, the basis upon which the testing decision was made, and the person making the decision.

(iv) Any estimates of railroad property damage made by persons not the scene shall be based on descriptions of specific physicial damage provided by the on-scene railroad representative.

(v) In the case of an accident involving passenger equipment, a host railroad may rely upon the the damage estimates provided by the passenger railroad (whether present on scene or not) in making the decision whether testing is required, subject to the same requirement that visible physical damage be specifically described.

(2) A railroad shall not require an employee to provide blood or urine specimens under the authority or procedures of this subject unless the railroad has made the determinations required by this section, based upon reasonable inquiry and good faith judgment. A railroad does not act in excess of its authority under this subpart if its representative has made such reasonable inquiry and exercised such good faith judgment, but it is later determined, after investigation, that one or more of the conditions thought to have required testing were not, in fact, present. However, this section does not excuse the railroad for any error arising from a mistake of law (e.g., application of testing criteria other than those contained in these regulations).

(3) A railroad is not in violation of this subpart if its representative has made such reasonable inquiry and exercised such good faith judgment but nevertheless errs in determining that post-accident testing is not required.

(4) An accident/incident with respect to which the railroad has made reasonable inquiry and exercised good faith judgment in determining the facts necessary to apply the criteria contained in paragraph (a) of this section is deemed a qualifying event for purposes of sample analysis, reporting, and other purposes.

(5) In the event samples are collected following an event determined by FRA not to be a qualifying event within the meaning of this paragraph, FRA directs its designated laboratory to destroy any sample material submitted and to refrain from disclosing to any person the results of any analysis conducted.

[54 FR 53259, Dec. 27, 1989, as amended at 59 FR 7460, Feb. 15, 1994; 61 FR 60634, Nov. 29, 1996]

§ 219.203 Responsibilities of railroads and employees.

(a) *Employees tested.* (1)(i) Following each accident and incident described in § 219.201, the railroad (or railroads) shall take all practicable steps to assure that all covered employees of the railroad directly involved in the accident or incident provide blood and urine samples for toxicological testing by FRA. Such employees shall cooperate in the provision of samples as described in this part and appendix C.

(ii) If the conditions for mandatory toxicological testing exist, the railroad may also require employees to provide breath for testing in accordance with the procedures set forth in 49 CFR part 40 and this part, if such testing does not interfere with timely collection of required samples.

(2) Such employees shall specifically include each and every operating employee assigned as a crew member of any train involved in the accident or incident. In any case where an operator, dispatcher, signal maintainer or other covered employee is directly and contemporaneously involved in the circumstances of the accident/incident, those employees shall also be required to provide samples.

(3) An employee shall be excluded from testing under the following circumstances: In any case of an accident/incident for which testing is mandated only under § 219.201(a)(2) of this subpart (an ''impact accident''), § 219.201(a)(3) (''fatal train incident''), or § 219.201(a)(4) (a ''passenger train accident with injury'') if the railroad representative can immediately determine, on the basis of specific information, that the employee had no role in the cause(s) or severity of the accident/incident. The railroad representative shall consider any such information immediately available at the time the qualifying event determination is made under § 219.201 of this subpart.

(4) The following provisions govern accidents/incidents involving non-covered employees:

(i) Surviving non-covered employees are not subject to testing under this subpart.

(ii) Testing of the remains of non-covered employees who are fatally injured in train accidents and incidents is required.

(b) *Timely sample collection.* (1) The railroad shall make every reasonable effort to assure that samples are provided as soon as possible after the accident or incident.

(2) This paragraph shall not be construed to inhibit the employees required to be tested from performing, in the immediate aftermath of the accident or incident, any duties that may be necessary for the preservation of life or property. However, where practical, the railroad shall utilize other employees to perform such duties.

(3) In the case of a passenger train which is in proper condition to continue to the next station or its destination after an accident or incident, the railroad shall consider the safety and convenience of passengers in determining whether the crew is immediately available for testing. A relief crew shall be called to relieve the train crew as soon as possible.

(4) Covered employees who may be subject to testing under this subpart shall be retained in duty status for the period necessary to make the determinations required by § 219.201 and this section and (as appropriate) to complete the sample collection procedure. An employee may not be recalled for testing under this subpart if that employee has been released from duty under the normal procedures of the

railroad, except that an employee shall be immediately recalled for testing if—

(i) The employee could not be retained in duty status because the employee went off duty under normal carrier procedures prior to being contacted by a railroad supervisor and instructed to remain on duty pending completion of the required determinations (e.g., in the case of a dispatcher or signal maintainer remote from the scene of an accident who was unaware of the occurrence at the time the employee went off duty);

(ii) The railroad's preliminary investigation (contemporaneous with the determination required by § 219.201 of this subpart) indicates a clear probability that the employee played a major role in the cause or severity of the accident/incident; and

(iii) The accident/incident actually occurred during the employee's duty tour.

An employee who has been transported to receive medical care is not released from duty for purposes of this section. Nothing in this section prohibits the subsequent testing of an employee who has failed to remain available for testing as required (i.e., who is absent without leave); but subsequent testing does not excuse such refusal by the employee timely to provide the required specimens.

(c) *Place of sample collection*. (1) Employees shall be transported to an independent medical facility where the samples shall be obtained. The railroad shall pre-designate for such testing one or more such facilities in reasonable proximity to any location where the railroad conducts operations. Designation shall be made on the basis of the willingness of the facility to conduct sample collection and the ability of the facility to complete sample collection promptly, professionally, and in accordance with pertinent requirements of this part. In all cases blood shall be drawn only by a qualified medical professional or by a qualified technician subject to the supervision of a qualified medical professional

(2) In the case of an injured employee, the railroad shall request the treating medical facility to obtain the samples.

(d) *Obtaining cooperation of facility*. (1) In seeking the cooperation of a medical facility in obtaining a sample under this subpart, the railroad shall, as necessary, make specific reference to the requirements of this subpart.

(2) If an injured employee is unconscious or otherwise unable to evidence consent to the procedure and the treating medical facility declines to obtain blood samples after having been acquainted with the requirements of this subpart, the railroad shall immediately notify FRA by toll free telephone (800–424–0201), stating the employee's name, the medical facility, its location, the name of the appropriate decisional authority at the medical facility, and the telephone number at which that person can be reached. FRA will then take appropriate measures to assist in obtaining the required sample.

(e) *Discretion of physician*. Nothing in this subpart shall be construed to limit the discretion of a physician to determine whether drawing a blood sample is consistent with the health of an injured employee or an employee afflicted by any other condition that may preclude drawing the specified quantity of blood.

[54 FR 53259, Dec. 27, 1989, as amended at 55 FR 22793, June 4, 1990; 59 FR 7460, Feb. 15, 1994]

§ 219.205 Sample collection and handling.

(a) *General.* Urine and blood samples shall be obtained, marked, preserved, handled, and made available to FRA consistent with the requirements of this subpart, and the technical specifications set forth in appendix C to this part.

(b) *Information requirements.* In order to process samples, analyze the significance of laboratory findings, and notify the railroads and employees of test results, it is necessary to obtain basic information concerning the accident/incident and any treatment administered after the accident/incident. Accordingly, the railroad representative shall complete the information required by FRA Form 6180.73 (revised) for shipping with the samples. Each employee subject to testing shall cooperate in completion of the required information on

FRA Form 6180.74 (revised) for inclusion in the shipping kit and processing of the samples. The railroad representative shall request an appropriate representative of the medical facility to complete the remaining portion of the information on each Form 6180.74 (revised). One Form 6180.73 (revised) shall be forwarded in the shipping kit with each group of samples. One Form 6180.74 (revised) shall be forwarded in the shipping kit for each employee who provides samples.

(c) *Shipping kit.* (1) FRA and the laboratory designated in appendix B to this part make available for purchase a limited number of standard shipping kits for the purpose of routine handling of toxicological samples under this subpart. Whenever possible, samples shall be placed in the shipping kit prepared for shipment according to the instructions provided in the kit and appendix C. Specifications for kits are contained in the Field Manual.

(2) Kits may be ordered directly from the laboratory designated in appendix B to this part.

(3) FRA maintains a limited number of kits at its field offices. A Class III railroad may utilize kits in FRA possession, rather than maintaining such kits on its property.

(d) *Shipment.* Samples shall be shipped as soon as possible by pre-paid air express or air freight (or other means adequate to ensure delivery within twenty-four (24) hours from time of shipment) to the laboratory designated in appendix B to this part. Where express courier pickup is available, the railroad shall request the medical facility to transfer the sealed toxicology kit directly to the express courier for transportation. If courier pickup is not available at the medical facility where the samples are collected or for any other reason prompt transfer by the medical facility cannot be assured, the railroad shall promptly transport the sealed shipping kit holding the samples to the most expeditious point of shipment via air express, air freight or equivalent means. The railroad shall maintain and document secure chain of custody of the kit from release by the medical facility to delivery for transportation, as described in appendix C.

[54 FR 53259, Dec. 27, 1989, as amended at 59 FR 7460, Feb. 15, 1994]

§ 219.206 FRA access to breath test results.

Documentation of breath test results shall be made available to FRA consistent with the requirements of this subpart, and the technical specifications set forth in appendix C to this part.

[59 FR 7461, Feb. 15, 1994]

§ 219.207 Fatality.

(a) In the case of an employee fatality in an accident or incident described in § 219.201, body fluid and/or tissue samples shall be obtained from the remains of the employee for toxicological testing. To ensure that samples are timely collected, the railroad shall immediately notify the appropriate local authority (such as a coroner or medical examiner) of the fatality and the requirements of this subpart, making available the shipping kit and requesting the local authority to assist in obtaining the necessary body fluid or tissue samples. The railroad shall also seek the assistance of the custodian of the remains, if a person other than the local authority.

(b) If the local authority or custodian of the remains declines to cooperate in obtaining the necessary samples, the railroad shall immediately notify FRA by toll free telephone (800–424–0201) providing the following information:

(1) Date and location of the accident or incident;

(2) Railroad;

(3) Name of the deceased;

(4) Name and telephone number of custodian of the remains; and

(5) Name and telephone number of local authority contacted.

(c) A coroner, medical examiner, pathologist, Aviation Medical Examiner, or other qualified professional is authorized to remove the required body fluid and/or tissue samples from the remains on request of the railroad or FRA pursuant to this part; and, in so acting, such person is the delegate of the Administrator under section 208 of the Federal Railroad Safety Act of 1970

(45 U.S.C. 437) (but not the agent of the Secretary for purposes of the Federal Tort Claims Act). Such qualified professional may rely upon the representations of the railroad or FRA representative with respect to the occurrence of the event requiring that toxicological tests be conducted and the coverage of the deceased employee under these rules.

(d) Appendix C to this part specifies body fluid and/or tissue samples required for toxicological analysis in the case of a fatality.

§ 219.209 Reports of tests and refusals.

(a)(1) A railroad that has experienced one or more events for which samples were obtained shall provide prompt telephonic notification summarizing such events. Notification shall be provided to the Office of Safety, FRA, at (202) 366–0501; an answering machine will record any notification calls made to this number outside of the Federal work week (8:30 a.m. to 5 p.m. EST or EDT).

(2) Each telephonic report shall contain:

(i) Name of railroad;

(ii) Name, title and telephone number of person making the report;

(iii) Time, date and location of the accident/incident;

(iv) Brief summary of the circumstances of the accident/incident, including basis for testing; and

(v) Number, names and occupations of employees tested.

(b) If the railroad is unable, as a result of non-cooperation of an employee or for any other reason, to obtain a sample and cause it to be provided to FRA as required by this subpart, the railroad shall make a concise narrative report of the reason for such failure and, if appropriate, any action taken in response to the cause of such failure. This report shall be appended to the report of the accident/incident required to be submitted under part 225 of this subchapter.

(c) If a test required by this section is not administered within four hours following the accident or incident, the railroad shall prepare and maintain on file a record stating the reasons the test was not promptly administered. Records shall be submitted to the Federal Railroad Administration upon request of the Associate Administrator for Safety.

[54 FR 53259, Dec. 27, 1989, as amended at 59 FR 7461, Feb. 15, 1994]

§ 219.211 Analysis and follow-up.

(a) The laboratory designated in appendix B to this part undertakes prompt analysis of samples provided under this subpart, consistent with the need to develop all relevant information and produce a complete report. Samples are analyzed for alcohol and controlled substances specified by FRA under protocols specified by FRA, summarized in appendix C, which have been submitted to the Department of Health and Human Services for acceptance. Samples may be analyzed for other impairing substances specified by FRA as necessary to the particular accident investigation.

(b) Results of post-accident toxicological testing under this subpart are reported to the railroad's Medical Review Officer and the employee. The MRO and the railroad shall treat the test results and any information concerning medical use or administration of drugs provided under this subpart in the same confidential manner as if subject to subpart H of this part, except where publicly disclosed by FRA or the National Transportation Safety Board.

(c) With respect to a surviving employee, a test reported as positive for alcohol or a controlled substance by the designated laboratory shall be reviewed by the railroad's Medical Review Officer with respect to any claim of use or administration of medications (consistent with § 219.103 of this part) that could account for the laboratory findings. The Medical Review Officer shall promptly report the results of each review to the Associate Administrator for Safety, FRA, Washington, DC 20590. Such report shall be in writing and shall reference the employing railroad, accident/incident date, and location; and the envelope shall be marked ''ADMINISTRATIVELY CONFIDENTIAL: ATTENTION ALCOHOL/DRUG PROGRAM MANAGER.'' The report shall state whether the MRO reported the test result to the employing railroad as positive or negative and the basis of any determination that

analytes detected by the laboratory derived from authorized use (including a statement of the compound prescribed, dosage/frequency, and any restrictions imposed by the authorized medical practitioner). Unless specifically requested by FRA in writing, the Medical Review Officer shall not disclose to FRA the underlying physical condition for which any medication was authorized or administered. The Federal Railroad Administration shall not be bound by the railroad Medical Review Officer's determination, but that determination will be considered by FRA in relation to the accident/incident investigation and with respect to any enforcement action under consideration.

(d) To the extent permitted by law, FRA treats test results indicating medical use of controlled substances consistent with § 219.103 (and other information concerning medically authorized drug use or administration provided incident to such testing) as administratively confidential and withholds public disclosure, except where it is necessary to consider this information in an accident investigation in relation to determination of probable cause. (However, as further provided in this section, FRA may provide results of testing under this subpart and supporting documentation to the National Transportation Safety Board.)

(e) An employee may respond in writing to the results of the test prior to the preparation of any final investigation report concerning the accident or incident. An employee wishing to respond shall do so by letter addressed to the Alcohol/Drug Program Manager, Office of Safety, FRA, 400 Seventh Street, SW., Washington, DC 20590 within 45 days of receipt of the test results. Any such submission shall refer to the accident date, railroad and location, shall state the position occupied by the employee on the date of the accident/incident, and shall identify any information contained therein that the employee requests be withheld from public disclosure on grounds of personal privacy (but the decision whether to honor such request shall be made by the FRA on the basis of controlling law).

(f)(1) The toxicology report may contain a statement of pharmacological significance to assist FRA and other parties in understanding the data reported. No such statement may be construed as a finding of probable cause in the accident or incident.

(2) The toxicology report is a part of the report of the accident/incident and therefore subject to the limitation of section 4 of the Accident Reports Act (45 U.S.C. 41) (prohibiting use of the report for any purpose in any action for damages).

(g)(1) It is in the public interest to ensure that any railroad disciplinary actions that may result from accidents and incidents for which testing is required under this subpart are disposed of on the basis of the most complete and reliable information available so that responsive action will be appropriate. Therefore, during the interval between an accident or incident and the date that the railroad receives notification of the results of the toxicological analysis, any provision of collective bargaining agreements establishing maximum periods for charging employees with rule violations, or for holding an investigation, shall not be deemed to run as to any offense involving the accident or incident (*i.e.*, such periods shall be tolled).

(2) This provision shall not be construed to excuse the railroad from any obligation to timely charge an employee (or provide other actual notice) where the railroad obtains sufficient information relating to alcohol or drug use, impairment or possession or other rule violations prior to the receipt to toxicological analysis.

(3) This provision does not authorize holding any employee out of service pending receipt of toxicological analysis; nor does it restrict a railroad from taking such action in an appropriate case.

(h) Except as provided in § 219.201 (with respect to non-qualifying events), each sample (including each split sample) provided under this subpart is retained for not less than three months following the date of the accident or incident (two years from the date of the accident or incident in the case of a sample testing positive for alcohol or a controlled substance). Post-mortem specimens may be made available to

the National Transportation Safety Board (on request).

(i) An employee (donor) may, within 60 days of the date of the toxicology report, request that the employee's blood and/or urine sample be retested by the designated laboratory or by another laboratory certified by the Department of Health and Human Services under that Department's Guidelines for Federal Workplace Drug Testing Programs that has available an appropriate, validated assay for the fluid and compound declared positive. Since some analytes may deteriorate during storage, detected levels of the compound shall, as technically appropriate, be reported and considered corroborative of the original test result. Any request for a retest shall be in writing, specify the railroad, accident date and location, be signed by the employee/donor, be addressed to the Associate Administrator for Safety, FRA, Washington, DC 20590, and be designated ''ADMINISTRATIVELY CONFIDENTIAL: ATTENTION ALCOHOL/DRUG PROGRAM MANAGER.'' The expense of any employee-requested retest at a laboratory other than the laboratory designated under this subpart shall be borne by the employee.

[54 FR 53259, Dec. 27, 1989, as amended at 59 FR 7461, Feb. 15, 1994]

§ 219.213 Unlawful refusals; consequences.

(a) *Disqualification.* An employee who refuses to cooperate in providing breath, blood or urine samples following an accident or incident specified in this subpart shall be withdrawn from covered service and shall be deemed disqualified for covered service for a period of nine (9) months in accordance with the conditions specified in § 219.107.

(b) *Procedures.* Prior to or upon withdrawing the employee from covered service under this section, the railroad shall provide notice of the reason for this action and an opportunity for hearing before a presiding officer other than the charging official. The employee shall be entitled to the procedural protection set out in § 219.104(d).

(c) *Subject of hearing.* The hearing required by this section shall determine whether the employee refused to submit to testing, having been requested to submit, under authority of this subpart, by a representative of the railroad. In determining whether a disqualification is required, the hearing official shall, as appropriate, also consider the following:

(1) Whether the railroad made a good faith determination, based on reasonable inquiry, that the accident or incident was within the mandatory testing requirements of this subpart; and

(2) In a case where a blood test was refused on the ground it would be inconsistent with the employee's health, whether such refusal was made in good faith and based on medical advice.

[54 FR 53259, Dec. 27, 1989, as amended at 59 FR 7461, Feb. 15, 1994]

Subpart D—Testing for Cause

§ 219.300 Mandatory reasonable suspicion testing.

(a) *Requirements.* (1) Beginning on January 1, 1995, a railroad shall require a covered employee to submit to an alcohol test when the railroad has reasonable suspicion to believe that the employee has violated any prohibition of subpart B of this part concerning use of alcohol. The railroad's determination that reasonable suspicion exists to require the covered employee to undergo an alcohol test must be based on specific, contemporaneous, articulable observations concerning the appearance, behavior, speech or body odors of the employee.

(2) A railroad shall require a covered employee to submit to a urine drug test when the railroad has reasonable suspicion to believe that the employee has violated the prohibitions of subpart B of this part concerning use of controlled substances. The railroad's determination that reasonable suspicion exists to require the covered employee to undergo a drug test must be based on specific, contemporaneous, articulable observations concerning the appearance, behavior, speech or body odors of the employee. Such observations may include indications of the chronic and withdrawal effects of drugs.

(b)(1) With respect to an alcohol test, the required observations shall be

made by a supervisor trained in accordance with § 219.11(g). The supervisor who makes the determination that reasonable suspicion exists may not conduct testing on that employee.

(2) With respect to a urine drug test, the required observations shall be made by two supervisors, at least one of whom is trained in accordance with § 219.11(g).

(c) Nothing in this section shall be construed to require the conduct of breath alcohol testing or urine drug testing when the employee is apparently in need of immediate medical attention.

(d)(1) If a test required by this section is not administered within two hours following the determination under this section, the railroad shall prepare and maintain on file a record stating the reasons the test was not properly administered. If a test required by this section is not administered within eight hours of the determination under this section, the railroad shall cease attempts to administer an alcohol test and shall state in the record the reasons for not administering the test. Records shall be submitted to FRA upon request of the Administrator.

(2) For the years stated in this paragraph, employers who submit MIS reports shall submit to the FRA each record of a test required by this section that is not completed within 8 hours. The employer's records of tests that are not completed within 8 hours shall be submitted to the FRA by March 15, 1996; March 15, 1997; and March 15, 1998; for calendar years 1995, 1996, and 1997, respectively. Employers shall append these records to their MIS submissions. Each record shall include the following information:

(i) Triggering event (including date, time, and location);

(ii) Employee category (do not include employee name or other identifying information);

(iii) Reason(s) test could not be completed within 8 hours; and

(iv) If blood alcohol testing could have been completed within eight hours, the name, address, and telephone number of the testing site where blood testing could have occurred.

[59 FR 7461, Feb. 15, 1994, as amended at 59 FR 62239, Dec. 2, 1994]

§ 219.301 Testing for reasonable cause.

(a) *Authorization.* A railroad may, under the conditions specified in this subpart, require any covered employee, as a condition of employment in covered service, to cooperate in breath or urine testing, or both, to determine compliance with §§ 219.101 and 219.102 of this part or a railroad rule implementing the requirements of §§ 219.101 and 219.102. This authority is limited to testing after observations or events that occur during duty hours (including any period of overtime or emergency service). The provisions of this subpart apply only when, and to the extent that, the test in question is conducted in reliance upon the authority conferred by this section. Section 219.23 prescribes the notice to an employee that is required when an employee is required to provide a breath or body fluid sample under this part. A railroad may not require an employee to be tested under the authority of this subpart unless reasonable cause, as defined in this section, exists with respect to that employee.

(b) *For cause breath testing.* In addition to reasonable suspicion as described in § 219.300, the following circumstances constitute cause for the administration of breath alcohol tests under this section:

(1) [Reserved]

(2) *Accident/incident.* The employee has been involved in an accident or incident reportable under part 225 of this title, and a supervisory employee of the railroad has a reasonable belief, based on specific, articulable facts, that the employee's acts or omissions contributed to the occurrence or severity of the accident or incident; or

(3) *Rule violation.* The employee has been directly involved in one of the following operating rule violations or errors:

(i) Noncompliance with a train order, track warrant, timetable, signal indication, special instruction or other direction with respect to movement of a train that involves—

(A) Occupancy of a block or other segment of track to which entry was not authorized;

(B) Failure to clear a track to permit opposing or following movement to pass;

(C) Moving across a railroad crossing at grade without authorization; or

(D) Passing an absolute restrictive signal or passing a restrictive signal without stopping (if required);

(ii) Failure to protect a train as required by a rule consistent with § 218.37 of this title (including failure to protect a train that is fouling an adjacent track, where required by the railroad's rules);

(iii) Operation of a train at a speed that exceeds the maximum authorized speed by at least ten (10) miles per hour or by fifty percent (50%) of such maximum authorized speed, whichever is less;

(iv) Alignment of a switch in violation of a railroad rule, failure to align a switch as required for movement, operation of a switch under a train, or unauthorized running through a switch;

(v) Failure to apply or stop short of derail as required;

(vi) Failure to secure a hand brake or failure to secure sufficient hand brakes, as required;

(vii) Entering a crossover before both switches are lined for movement; or

(viii) In the case of a person performing a dispatching function or block operator function, issuance of a train order or establishment of a route that fails to provide proper protection for a train.

(c) *For cause urine testing.* In addition to reasonable suspicion as described in § 219.300, each of the conditions set forth in paragraphs (b)(2) (''accident/incident'') and (b)(3) (''rule violation'') of this section as constituting cause for breath alcohol testing also constitutes cause with respect to urine drug testing.

(d) [Reserved]

(e) *Limitation for subpart C events.* The compulsory urine testing authority conferred by this section does not apply with respect to any event subject to post-accident toxicological testing as required by § 219.201 of this part. However, use of compulsory breath test authority is authorized in any case where breath test results can be obtained in a timely manner at the scene of the accident and conduct of such tests does not materially impede the collection of samples under subpart C.

[54 FR 53259, Dec. 27, 1989; 55 FR 22793, June 4, 1990, as amended at 59 FR 7461, Feb. 15, 1994]

§ 219.302 Prompt sample collection; time limitation.

(a) Testing under this subpart may only be conducted promptly following the observations or events upon which the testing decision is based, consistent with the need to protect life and property.

(b) No employee shall be required to participate in breath alcohol or urine drug testing under this section after the expiration of an eight hour period from—

(1) The time of the observations or other events described in this section; or

(2) In the case of an accident/incident, the time a responsible railroad supervisor receives notice of the event providing reasonable cause for conduct of the test.

(c) An employee may not be tested under this subpart if that employee has been released from duty under the normal procedures of the railroad. An employee who has been transported to receive medical care is not released from duty for purposes of this section. Nothing in this section prohibits the subsequent testing of an employee who has failed to remain available for testing as required (*i.e.,* who is absent without leave).

(d) As used in this subpart a ''responsible railroad supervisor'' means any responsible line supervisor (e.g., a trainmaster or road foreman of engines) or superior official in authority over the employee to be tested.

(e) In the case of a urine drug test, the eight-hour requirement is satisfied if the employee has been delivered to the collection site (where the collector is present) and the request has been made to commence collection of the urine specimens within that period.

(f) [Reserved]

(g) Section 219.23 prescribes the notice to an employee that is required to

provide breath or a body fluid sample under this part.

[59 FR 7462, Feb. 15, 1994, as amended at 59 FR 62239, Dec. 2, 1994]

§ 219.303 Alcohol test procedures and safeguards.

(a)(1) Each Class I railroad (including the National Railroad Passenger Corporation) and each railroad providing commuter passenger service shall implement mandatory reasonable suspicion testing according to the procedures listed in paragraph (b) of this section beginning on January 1, 1995.

(2) Each Class II railroad shall implement mandatory reasonable suspicion testing according to the procedures listed in paragraph (b) of this section beginning on July 1, 1995. Prior to that date, a Class II railroad may use the procedures described in paragraphs (c) through (e) of this section.

(3) Each Class III railroad (including a switching and terminal or other railroad not otherwise classified) shall implement mandatory reasonable suspicion testing according to the procedures listed in paragraph (b) of this section beginning on January 1, 1996. Prior to that date, a Class III railroad may use the procedures described in paragraphs (c) through (e) of this section.

(4) In the case of a railroad commencing operations after January 1, 1996, the railroad shall implement mandatory reasonable suspicion testing not later than the expiration of 60 days from approval by the Administrator of the railroad's random testing programs.

(b) As provided for in subparagraph (a)(1) of this section, the conduct of alcohol testing under this subpart is governed by subpart H of this part and part 40 of subtitle A of this title.

(c) As provided for in subparagraphs (a)(2) and (a)(3) of this section, and except as provided in paragraph (f), the following conditions apply to breath testing authorized by this subpart.

(1) Testing devices shall be selected from among those listed on the Conforming Products List of Evidential Breath Measurement Devices amended and published in the FEDERAL REGISTER from time to time by the National Highway Traffic Safety Administration (NHTSA), Department of Transportation.

(2) Each device shall be properly maintained and shall be calibrated or verified as to correct calibration by use of a breath alcohol simulator (calibrating unit) listed on the NHTSA Conforming Products List of Calibrating Units for Breath Alcohol Testers (as amended and published) with sufficient frequency to ensure the accuracy of the device (within plus or minus .01 percent), but not less frequently than provided in the manufacturer's instructions.

(3) Tests shall be conducted by a trained and qualified operator. The operator shall have received training on the operational principles of the particular instrument employed and practical experience in the operation of the device and use of the breath alcohol calibrating unit. A copy of the training program shall be filed with FRA in conjunction with the filing required by § 217.11 of this title.

(4) Tests shall be conducted in accordance with procedures specified by the manufacturer of the testing device, consistent with sound technical judgment, and shall include appropriate restrictions on ambient air temperature.

(5) If an initial test is positive, the employee shall be tested again after the expiration of a period of not less than 15 minutes, in order to confirm that the test has properly measured the alcohol content of deep lung air.

(d) Because of the inherent limitations of the instrumentation, any indicated breath test result of less than .02 percent shall be deemed a negative test.

(e)(1) In any case where a breath test is intended for use in the railroad disciplinary process and the result is positive, the employee shall be given the prompt opportunity to provide a blood sample at an independent medical facility for analysis by a competent independent laboratory. The railroad shall provide the required transportation to facilitate the blood test.

(2) A blood test under this section shall conform to the following standards:

(i) The specimen shall be collected in a medically acceptable manner by a

qualified medical professional or technician using a non-ethanol swab and shall be deposited into a single-use sterile vacuum tube containing at least one percent sodium fluoride (and an anticoagulant).

(ii) While the specimen remains in full view of the employee, the specimen shall be clearly labeled with the employee's name and/or a unique identifying number and shall be sealed with a tamperproof seal.

(iii) The sample shall be handled in accordance with chain of custody procedures from the point of collection through analysis and secure storage at the laboratory.

(iv) The sample shall be screened for alcohol only by a method reliable at a detection limit of not higher than .02 percent. Any presumptive positive shall be confirmed by gas chromatography with a suitable internal standard. The screening run shall include at least 10% quality control samples. The confirmation run shall include ethanol standards (including an ethanol standard certified against or traceable to a primary standard), at least one blank specimen, other appropriate volatiles (e.g., isopropanol), and at least one control purchased commercially or provided through an external quality control program. Results declared positive on confirmation shall be consistent with pre-established criteria for retention time of internal and external standards. Blood alcohol concentration shall be reported only at values of .02 percent or greater within the linear portion of the standard curve. Unconfirmed presumptive positive results and values below .02 percent shall be reported as negative. Any quantitations to the third digit shall be rounded downward to two digits (i.e., .238% to .23%).

(v) The remaining portion of any specimen testing positive shall be retained in secure frozen storage for at least one year, and the employee shall have the right to request a retest of the specimen at a competent independent laboratory within 60 days of the date of the laboratory report.

(vi) Test results shall be reported to the Medical Review Officer who shall review and act upon the results in the same manner provided for drug urine testing in Subpart H of this part, except that fully quantitated results shall be made available to the employer representative.

(3) If the blood test under this section is reported as negative, the breath test shall be deemed negative for all purposes.

(f)(1) Under the circumstances set forth in § 219.301, a railroad may require an employee to participate in a breath alcohol screening test solely for the purpose of determining whether the conduct of a test meeting the criteria of paragraph (a) is indicated. If the screening test is negative within the meaning of paragraph (b), the employee shall not be required to submit to further breath testing under this subpart. If the screening test is positive, no consequence shall attach except that the employee may be removed from covered service for the period necessary to conduct a breath test meeting the criteria of paragraph (a).

(2) Except as provided in paragraph (d)(2)(iii) of this section, the conduct of a screening test under paragraph (d)(1) of this section does not excuse full compliance with paragraph (a) of this section with respect to any breath test procedure which is then undertaken. If a screening test is positive, the following procedures govern:

(i) An initial breath test shall be conducted meeting the criteria of paragraph (a) of this section.

(ii) If that test is positive, a second breath test shall be conducted meeting the criteria of paragraph (a) of this section.

(iii) The second test meeting the criteria of section (a) of this section must be conducted at least 15 minutes after the positive screening test conducted under paragraph (d)(1) of this section. However, since a waiting period of 15 minutes is sufficient to permit the dissipation of any alcohol in the mouth, the requirement of paragraph (a)(5) of this section that there be a period of at least 15 minutes between the two tests meeting the criteria of paragraph (a) of this section does not apply.

[59 FR 60563, Nov. 25, 1994]

§ 219.305 Urine test procedures and safeguards.

The conduct of urine drug testing under this subpart is governed by subpart H of this part and (to the extent not inconsistent with this part) part 40 of subtitle A of this title.

Subpart E—Identification of Troubled Employees

§ 219.401 Requirement for policies.

(a) The purpose of this subpart is to prevent the use of alcohol and drugs in connection with covered service.

(b) Each railroad shall adopt, publish and implement—

(1) A policy designed to encourage and facilitate the identification of those covered employees who abuse alcohol or drugs as a part of a treatable condition and to ensure that such employees are provided the opportunity to obtain counseling or treatment before those problems manifest themselves in detected violations of this part (hereafter ''voluntary referral policy''); and

(2) A policy designed to foster employee participation in preventing violations of this subpart and encourage co-worker participation in the direct enforcement of this part (hereafter ''co-worker report policy'').

(c) A railroad may comply with this subpart by adopting, publishing and implementing policies meeting the specific requirements of §§ 219.403 and 219.405 of this subpart or by complying with § 219.407.

(d) If a railroad complies with this part by adopting, publishing and implementing policies consistent with §§ 219.403 and 219.405, the railroad shall make such policies, and publications announcing such policies, available for inspection and copying by FRA.

(e) Nothing in this subpart shall be construed to—

(1) Require payment of compensation for any period an employee is out of service under a voluntary referral or co-worker report policy;

(2) Require a railroad to adhere to a voluntary referral or co-worker report policy in a case where the referral or report is made for the purpose, or with the effect, of anticipating the imminent and probable detection of a rule violation by a supervising employee; or

(3) Limit the discretion of a railroad to dismiss or otherwise discipline an employee for specific rule violations or criminal offenses, except as specifically provided by this subpart.

§ 219.403 Voluntary referral policy.

(a) *Scope.* This section prescribes minimum standards for voluntary referral policies. Nothing in this section restricts a railroad from adopting, publishing and implementing a voluntary referral policy that affords more favorable conditions to employees troubled by alcohol or drug abuse problems, consistent with the railroad's responsibility to prevent violations of § 219.101 and § 219.102.

(b) *Required provisions.* A voluntary referral policy shall include the following provisions:

(1) A covered employee who is affected by an alcohol or drug use problem may maintain an employment relationship with the railroad if, before the employee is charged with conduct deemed by the railroad sufficient to warrant dismissal, the employee seeks assistance through the railroad for the employee's alcohol or drug use problem or is referred for such assistance by another employee or by a representative of the employee's collective bargaining unit. The railroad shall specify whether, and under what circumstances, its policy provides for the acceptance of referrals from other sources, including (at the option of the railroad) supervisory employees.

(2) Except as may be provided under paragraph (c) of this part, the railroad treats the referral and subsequent handling, including counseling and treatment, as confidential.

(3) The railroad will, to the extent necessary for treatment and rehabilitation, grant the employee a leave of absence from the railroad for the period necessary to complete primary treatment and establish control over the employee's alcohol or drug problem. The policy must allow a leave of absence of not less than 45 days, if necessary for the purpose of meeting initial treatment needs.

(4) Except as may be provided under paragraph (c)(2) of this section, the employee will be returned to service on the recommendation of the substance abuse professional. Approval to return to service may not be unreasonably withheld.

(c) *Optional provisions.* A voluntary referral policy may include any of the following provisions, at the option of the railroad:

(1) The policy may provide that the rule of confidentiality is waived if—

(i) The employee at any time refuses to cooperate in a recommended course of counseling or treatment and/or;

(ii) The employee is later determined, after investigation, to have been involved in an alcohol or drug-related disciplinary offense growing out of subsequent conduct.

(2) The policy may require successful completion of a return-to-service medical examination as a further condition on reinstatement in covered service.

(3) The policy may provide that it does not apply to an employee who has previously been assisted by the railroad under a policy or program substantially consistent with this section or who has previously elected to waive investigation under § 219.405 of this section (co-worker report policy).

(4) The policy may provide that, in order to invoke its benefits, the employee must report to the contact designated by the railroad either:

(i) During non-duty hours (*i.e.,* at a time when the employee is off duty) or

(ii) While unimpaired and otherwise in compliance with the railroad's alcohol and drug rules consistent with this subpart.

§ 219.405 Co-worker report policy.

(a) *Scope.* This section prescribes minimum standards for co-worker report policies. Nothing in this section restricts a railroad from adopting, publishing and implementing a policy that affords more favorable conditions to employees troubled by alcohol or drug abuse problems, consistent with the railroad's responsibility to prevent violations of §§ 219.101 and 219.102.

(b) *Employment relationship.* A co-worker report policy shall provide that a covered employee may maintain an employment relationship with the railroad following an alleged first offense under these rules or the railroad's alcohol and drug rules, subject to the conditions and procedures contained in this section.

(c) *General conditions and procedures.* (1) The alleged violation must come to the attention of the railroad as a result of a report by a co-worker that the employee was apparently unsafe to work with or was, or appeared to be, in violation of this part or the railroad's alcohol and drug rules.

(2) If the railroad representative determines that the employee is in violation, the railroad may immediately remove the employee from service in accordance with its existing policies and procedures.

(3) The employee must elect to waive investigation on the rule charge and must contact the substance abuse professional within a reasonable period specified by the policy.

(4) The substance abuse professional must schedule necessary interviews with the employee and complete an evaluation within 10 calendar days of the date on which the employee contacts the professional with a request for evaluation under the policy, unless it becomes necessary to refer the employee for further evaluation. In each case, all necessary evaluations must be completed within 20 days of the date on which the employee contacts the professional.

(d) *When treatment is required.* If the substance abuse professional determines that the employee is affected by psychological or chemical dependence on alcohol or a drug or by another identifiable and treatable mental or physical disorder involving the abuse of alcohol or drugs as a primary manifestation, the following conditions and procedures shall apply:

(1) The railroad must, to the extent necessary for treatment and rehabilitation, grant the employee a leave of absence from the railroad for the period necessary to complete primary treatment and establish control over the employee's alcohol or drug problem. The policy must allow a leave of absence of not less than 45 days, if necessary for the purpose of meeting initial treatment needs.

(2) The employee must agree to undertake and successfully complete a course of treatment deemed acceptable by the substance abuse professional.

(3) The railroad must promptly return the employee to service, on recommendation of the substance abuse professional, when the employee has established control over the substance abuse problem. Return to service may also be conditioned on successful completion of a return-to-service medical examination. Approval to return to service may not be unreasonably withheld.

(4) Following return to service, the employee, as a further condition on withholding of discipline, may, as necessary, be required to participate in a reasonable program of follow-up treatment for a period not to exceed 60 months from the date the employee was originally withdrawn from service.

(e) *When treatment is not required.* If the substance abuse professional determines that the employee is not affected by an identifiable and treatable mental or physical disorder—

(1) The railroad shall return the employee to service within 5 days after completion of the evaluation.

(2) During or following the out-of-service period, the railroad may require the employee to participate in a program of education and training concerning the effects of alcohol and drugs on occupational or transportation safety.

(f) *Follow-up tests.* A railroad may conduct return-to-service and/or follow-up tests (as described in § 219.104 of this part) of an employee who waives investigation and is determined to be ready to return to service under this section.

§ 219.407 Alternate policies.

(a) In lieu of a policy under § 219.403 (voluntary referral) or § 219.405 (co-worker report), or both, a railroad may adopt, publish and implement, with respect to a particular class or craft of covered employees, an alternate policy or policies having as their purpose the prevention of alcohol or drug use in railroad operations, if such policy or policies has the written concurrence of the recognized representatives of such employees.

(b) The concurrence of recognized employee representatives in an alternate policy may be evidenced by a collective bargaining agreement or any other document describing the class or craft of employees to which the alternate policy applies. The agreement or other document must make express reference to this part and to the intention of the railroad and employee representatives that the alternate policy shall apply in lieu of the policy required by § 219.403, § 219.405, or both.

(c) The railroad shall file the agreement or other document described in paragraph (b) with the Associate Administrator for Safety, FRA. If the alternate policy is amended or revoked, the railroad shall file a notice of such amendment or revocation at least 30 days prior to the effective date of such action.

(d) This section does not excuse a railroad from adopting, publishing and implementing the policies required by §§ 219.403 and 219.405 with respect to any group of covered employees not within the coverage of an appropriate alternate policy.

Subpart F—Pre-employment Tests

§ 219.501 Pre-employment tests.

(a)(1) Each Class I railroad (including the National Railroad Passenger Corporation) and each railroad providing commuter passenger service shall implement pre-employment alcohol testing beginning on January 1, 1995.

(2) Each Class II railroad shall implement pre-employment alcohol testing beginning on July 1, 1995.

(3) Each Class III railroad (including a switching and terminal or other railroad not otherwise classified) shall implement pre-employment alcohol testing beginning on January 1, 1996.

(4) In the case of a railroad commencing operations after January 1, 1996, the railroad shall implement pre-employment alcohol testing not later than the expiration of 60 days from approval by the Administrator of the railroad's random testing programs.

(b) Prior to the first time a covered employee performs covered service for a railroad, the employee shall undergo testing for alcohol and drugs. No railroad shall allow a covered employee to

perform covered service, unless the employee has been administered an alcohol test with a result indicating an alcohol concentration of less than .04 and has been administered a test for drugs with a result that did not indicate the misuse of controlled substances. This requirement shall apply to final applicants for employment and to employees seeking to transfer for the first time from non-covered service to duties involving covered service. If the test result of a final applicant for pre-employment indicates an alcohol content of .02 or greater, the provisions of paragraph (b) of this section shall apply.

(c) No final applicant for employment tested under the provisions of this part who is found to have an alcohol concentration of .02 or greater but less than .04 shall perform safety-sensitive functions for a railroad, nor shall a railroad permit the applicant to perform safety-sensitive functions, until the applicant's alcohol concentration measures less than .02.

(d) Tests shall be accomplished through breath analysis and analysis of urine samples. The conduct of breath alcohol testing and urine drug testing under this subpart is governed by subpart H of this part and part 40 of subtitle A of this title.

(e) As used in subpart H with respect to a test required under this subpart, the term *covered employee* includes an applicant for pre-employment testing only. In the case of an applicant who declines to be tested and withdraws the application for employment, no record shall be maintained of the declination.

(f) Notwithstanding any other provisions of this subpart, all provisions and requirements in this section pertaining to preemployment testing for alcohol are suspended as of May 10, 1995.

[59 FR 60564, Nov. 25, 1994, as amended at 60 FR 24766, May 10, 1995]

§ 219.503 Notification; records.

The railroad shall provide for medical review of the urine drug test results as provided in subpart H of this part. The railroad shall notify the applicant of the results of the urine and breath tests in the same manner as provided for employees in subpart H. Records shall be maintained confidentially and shall be retained in the same manner as required under subpart J for employee test records, except that such records need not reflect the identity of an applicant whose application for employment in covered service was denied.

[59 FR 7462, Feb. 15, 1994]

§ 219.505 Refusals.

An applicant who has refused to submit to pre-employment testing under this section shall not be employed in covered service based upon the application and examination with respect to which such refusal was made. This section does not create any right on the part of the applicant to have a subsequent application considered; nor does it restrict the discretion of the railroad to entertain a subsequent application for employment from the same person.

[54 FR 53259, Dec. 27, 1989, as amended at 59 FR 7462, Feb. 15, 1994]

Subpart G—Random Alcohol and Drug Testing Programs

§ 219.601 Railroad random drug testing programs.

(a) *Submission*. Each railroad shall submit for FRA approval a random testing program meeting the requirements of this subpart. A Class I railroad (including the National Railroad Passenger Corporation) or a railroad providing commuter passenger service shall submit such a program not later than October 2, 1989. A Class II railroad shall submit such a program not later than April 2, 1990. A Class III railroad (including a switching and terminal or other railroad not otherwise classified) shall submit such a program not later than July 2, 1990. A railroad commencing operations after the pertinent date specified in this paragraph shall submit such a program not later than 30 days prior to such commencement. The program shall be submitted to the Associate Administrator for Safety, FRA, for review and approval by the Administrator. If, after approval, a railroad desires to amend the random testing program implemented under this subpart, the railroad shall file with FRA a notice of such amendment at least 30 days prior to the intended effective

date of such action. A program responsive to the requirements of this section or any amendment to the program shall not be implemented prior to approval.

(b) *Form of programs.* Random testing programs submitted by or on behalf of each railroad under this subpart shall meet the following criteria, and the railroad and its managers, supervisors, officials and other employees and agents shall conform to such criteria in implementing the program:

(1) Selection of covered employees for testing shall be made by a method employing objective, neutral criteria which ensure that every covered employee has a substantially equal statistical chance of being selected within a specified time frame. The method may not permit subjective factors to play a role in selection, *i.e.*, no employee may be selected as the result of the exercise of discretion by the railroad. The selection method shall be capable of verification with respect to the randomness of the selection process, and any records necessary to document random selection shall be retained for not less than 24 months from the date upon which the particular samples were collected.

(2) The program shall select for testing a sufficient number of employees so that, during the first 12 months—

(i) The random testing program is spread reasonably through the 12-month period;

(ii) The last test collection during the year is conducted at an annualized rate of 50 percent; and

(iii) The total number of tests conducted during the 12 months is equal to at least 25 percent of the number of covered employees.

During the subsequent 12-month period, the program shall select for testing a sufficient number of employees so that the number of tests conducted will equal at least 50 percent of the number of covered employees. Annualized percentage rates shall be determined by reference to the total number of covered employees employed by the railroad at the beginning of the particular twelve-month period or by an alternate method specified in the plan approved by the Associate Administrator for Safety. If the railroad conducts random testing through a consortium, the annual rate may be calculated for each individual employer or for the total number of covered employees subject to random testing by the consortium.

(3) Railroad random testing programs shall ensure to the maximum extent practicable that each employee shall perceive the possibility that a random test may be required on any day the employee reports for work.

(4) Notice of an employee's selection shall not be provided until the duty tour in which testing is to be conducted, and then only so far in advance as is reasonably necessary to ensure the employee's presence at the time and place set for testing.

(5) The program shall include testing procedures and safeguards, and procedures for action based on positive test results, consistent with this part.

(6) An employee shall be subject to testing only while on duty. Only employees who perform covered service for the railroad shall be subject to testing under this part. In the case of employees who during some duty tours perform covered service and during others do not, the railroad program shall specify the extent to which, and the circumstances under which they shall be subject to testing. To the extent practical within the limitations of this part and in the context of the railroad's operations, the railroad program shall provide that employees shall be subject to the possibility of random testing on any day they actually perform covered service.

(7) Each time an employee is notified for random drug testing the employee will be informed that selection was made on a random basis.

(c) *Approval.* The Associate Administrator for Safety will notify the railroad in writing whether the program is approved as consistent with the criteria set forth in this part. If the Associate Administrator for Safety determines that the program does not conform to those criteria, the Associate Administrator for Safety will inform the railroad of any matters preventing approval of the program, with specific explanation as to necessary revisions.

The railroad shall resubmit its program with the required revisions within 30 days of such notice. Failure to resubmit the program with the necessary revisions will be considered a failure to implement a program under this subpart.

(d) *Implementation.* (1) No later than 45 days prior to commencement of random testing, the railroad shall publish to each of its covered employees, individually, a written notice that they will be subject to random drug testing under this part. Such notice shall state the date for commencement of the program, shall state that the selection of employees for testing will be on a strictly random basis, shall describe the consequences of a determination that the employee has violated § 219.102 or any applicable railroad rule, and shall inform the employee of the employee's rights under subpart E of this part. A copy of the notice shall be provided to each new covered employee on or before the employee's initial date of service. Since knowledge of Federal law is presumed, nothing in this paragraph creates a defense to a violation of § 219.102 of this part.

(2) Each Class I railroad (including the National Railroad Passenger Corporation) and each railroad providing commuter passenger service shall implement its approved random testing program not later than January 16, 1990. Each Class II railroad shall implement its approved random testing program not later than July 2, 1990. Each Class III railroad (including a switching and terminal or other railroad not otherwise classified) shall implement its approved random testing program not later than November 1, 1990. In the case of a railroad commencing operations after the pertinent date set forth in paragraph (a) of this section for filing of a program, the railroad shall implement its approved random testing program not later than the expiration of 60 days from approval by the Administrator or by the pertinent date set forth in this paragraph, whichever is later.

[54 FR 53259, Dec. 27, 1989, as amended at 59 FR 7462, Feb. 15, 1994]

§ 219.602 Administrator's determination of random drug testing rate.

(a) Except as provided in paragraphs (b) through (d) of this section, the minimum annual percentage rate for random drug testing shall be 50 percent of covered employees.

(b) The Administrator's decision to increase or decrease the minimum annual percentage rate for random drug testing is based on the reported positive rate for the entire industry. All information used for this determination is drawn from the drug MIS reports required by this part. In order to ensure reliability of the data, the Administrator considers the quality and completeness of the reported data, may obtain additional information or reports from railroads, and may make appropriate modifications in calculating the industry positive rate. Each year, the Administrator will publish in the FEDERAL REGISTER the minimum annual percentage rate for random drug testing of covered employees. The new minimum annual percentage rate for random drug testing will be applicable starting January 1 of the calendar year following publication.

(c) When the minimum annual percentage rate for random drug testing is 50 percent, the Administrator may lower this rate to 25 percent of all covered employees if the Administrator determines that the data received under the reporting requirements of § 219.803 for two consecutive calendar years indicate that the reported positive rate is less than 1.0 percent.

(d) When the minimum annual percentage rate for random drug testing is 25 percent, and the data received under the reporting requirements of § 219.803 for any calendar year indicate that the reported positive rate is equal to or greater than 1.0 percent, the Administrator will increase the minimum annual percentage rate for random drug testing to 50 percent of all covered employees.

(e) Selection of covered employees for testing shall be made by a method employing objective, neutral criteria which ensures that every covered employee has a substantially equal statistical chance of being selected within a specified time frame. The method may not permit subjective factors to play a

role in selection, *i.e.*, no employee may be selected as a result of the exercise of discretion by the railroad. The selection method shall be capable of verification with respect to the randomness of the selection process.

(f) The railroad shall randomly select a sufficient number of covered employees for testing during each calendar year to equal an annual rate not less than the minimum annual percentage rate for random drug testing determined by the Administrator. If the railroad conducts random drug testing through a consortium, the number of employees to be tested may be calculated for each individual railroad or may be based on the total number of covered employees covered by the consortium who are subject to random drug testing at the same minimum annual percentage rate under this part or any DOT drug testing rule.

(g) Each railroad shall ensure that random drug tests conducted under this part are unannounced and that the dates for administering random tests are spread reasonably throughout the calendar year.

(h) If a given covered employee is subject to random drug testing under the drug testing rules of more than one DOT agency for the same railroad, the employee shall be subject to random drug testing at the percentage rate established for the calendar year by the DOT agency regulating more than 50 percent of the employee's function.

(i) If a railroad is required to conduct random drug testing under the drug testing rules of more than one DOT agency, the railroad may—

(1) Establish separate pools for random selection, with each pool containing the covered employees who are subject to testing at the same required rate; or

(2) Randomly select such employees for testing at the highest percentage rate established for the calendar year by any DOT agency to which the railroad is subject.

[59 FR 62228, Dec. 2, 1994]

§ 219.603 Participation in drug testing.

Participation. A railroad shall, under the conditions specified in this subpart and subpart H, require a covered employee selected through the random testing program to cooperate in urine testing to determine compliance with § 210.102, and the employee shall provide the required sample and complete the required paperwork and certifications. Compliance by the employee shall be excused only in the case of a documented medical or family emergency.

[54 FR 53259, Dec. 27, 1989, as amended at 59 FR 7463, Feb. 15, 1994]

§ 219.605 Positive drug test results; procedures.

(a) *Medical review*. The result of a test required under this subpart shall be deemed positive only after it has been properly confirmed as required in subpart H of this part and reviewed by a Medical Review Officer (MRO) as provided in subpart H to determine if it is evidence of prohibited drug use under § 219.102.

(b) Procedures for administrative handling by the railroad in the event a sample provided under this subpart is reported as positive by the MRO are set forth in § 219.104 of this part. The responsive action required in § 219.104 is not stayed pending the result of a retest or split sample test.

[54 FR 53259, Dec. 27, 1989, as amended at 59 FR 7463, Feb. 15, 1994]

§ 219.607 Railroad random alcohol testing programs.

(a) Each railroad shall submit for FRA approval a random alcohol testing program meeting the requirements of this subpart. A Class I railroad (including the National Railroad Passenger Corporation) or a railroad providing commuter passenger service shall submit such a program not later than August 15, 1994. A Class II railroad shall submit such a program not later than February 15, 1995. A Class III railroad (including a switching and terminal or other railroad not otherwise classified) shall submit such a program not later than August 15, 1995. A railroad commencing operations after the pertinent date specified in this paragraph shall submit a random alcohol testing program not later than 30 days prior to such commencement. The program shall be submitted to the Associate Administrator for Safety, FRA, for review

and approval. If, after approval, a railroad desires to amend the random alcohol testing program implemented under this subpart, the railroad shall file with FRA a notice of such amendment at least 30 days prior to the intended effective date of such action. A program responsive to the requirements of this section or any amendment to the program shall not be implemented prior to approval.

(b) *Form of programs.* Random alcohol testing programs submitted by or on behalf of each railroad under this subpart shall meet the following criteria, and the railroad and its managers, supervisors, officials and other employees and agents shall conform to such criteria in implementing the program:

(1) Selection of covered employees for testing shall be made by a method employing objective, neutral criteria which ensures that every covered employee has a substantially equal statistical chance of being selected within a specified time frame. The method may not permit subjective factors to play a role in selection, *i.e.,* no employee may be selected as the result of the exercise of discretion by the railroad. The selection method shall be capable of verification with respect to the randomness of the selection process, and any records necessary to document random selection shall be retained for not less than 24 months from the date upon which the particular samples were collected.

(2) The program shall include testing procedures and safeguards, and, consistent with this part, procedures for action based on tests where the employee is found to have violated § 219.101.

(3) The program shall ensure that random alcohol tests conducted under this part are unannounced and that the dates for administering random tests are spread reasonably throughout the calendar year.

(4) The program shall ensure to the maximum extent practicable that each covered employee shall perceive the possibility that a random alcohol test may be required at any time the employee reports for work and at any time during the duty tour (except any period when the employee is expressly relieved of any responsibility for performance of covered service).

(5) An employee shall be subject to testing only while on duty. Only employees who perform covered service for the railroad shall be subject to testing under this part. In the case of employees who during some duty tours perform covered service and during others do not, the railroad program shall specify the extent to which, and the circumstances under which they shall be subject to testing. To the extent practical within the limitations of this part and in the context of the railroad's operations, the railroad program shall provide that employees shall be subject to the possibility of random testing on any day they actually perform covered service.

(6) Testing shall be conducted promptly, as provided in § 219.715(a).

(7) Each time an employee is notified for random alcohol testing the employee will be informed that selection was made on a random basis.

(8) Each railroad shall ensure that each covered employee who is notified of selection for random alcohol testing proceeds to the test site immediately; provided, however, that if the employee is performing a safety-sensitive function at the time of the notification, the railroad shall instead ensure that the employee ceases to perform the safety-sensitive function and proceeds to the testing site as soon as possible.

(c) *Implementation.* (1) No later than 45 days prior to commencement of random alcohol testing, the railroad shall publish to each of its covered employees, individually, a written notice that they will be subject to random alcohol testing under this part. Such notice shall state the date for commencement of the program, shall state that the selection of employees for testing will be on a strictly random basis, shall describe the consequences of a determination that the employee has violated § 219.101 or any applicable railroad rule, and shall inform the employee of the employee's rights under subpart E of this part. A copy of the notice shall be provided to each new covered employee on or before the employee's initial date of service. Since knowledge of Federal law is presumed, nothing in this paragraph creates a defense to a

violation of § 219.101. This notice may be combined with the notice or policy statement required by § 219.23.

(2) Each Class I railroad (including the National Railroad Passenger Corporation) and each railroad providing commuter passenger service shall implement its approved random alcohol testing program beginning on January 1, 1995. Each Class II railroad shall implement its approved random testing program beginning on July 1, 1995. Each Class III railroad (including a switching and terminal or other railroad not otherwise classified) shall implement its approved random testing program beginning on January 1, 1996. In the case of a railroad commencing operations after the pertinent date set forth in paragraph (a) of this section for filing of a program, the railroad shall implement its approved random testing program not later than the expiration of 60 days from approval by the Administrator or by the pertinent date set forth in this paragraph, whichever is later.

[59 FR 7463, Feb. 15, 1994]

§ 219.608 Administrator's determination of random alcohol testing rate.

(a) Except as provided in paragraphs (b) through (d) of this section, the minimum annual percentage rate for random alcohol testing shall be 25 percent of covered employees.

(b) The Administrator's decision to increase or decrease the minimum annual percentage rate for random alcohol testing is based on the violation rate for the entire industry. All information used for the determination is drawn from the alcohol MIS reports required by this part. In order to ensure reliability of the data, the Administrator considers the quality and completeness of the reported data, may obtain additional information or reports from employers, and may make appropriate modifications in calculating the industry violation rate. Each year, the Administrator will publish in the FEDERAL REGISTER the minimum annual percentage rate for random alcohol testing of covered employees. The new minimum annual percentage rate for random alcohol testing will be applicable starting January 1 of the calendar year following publication.

(c)(1) When the minimum annual percentage rate for random alcohol testing is 25 percent or more, the Administrator may lower this rate to 10 percent of all covered employees if the Administrator determines that the data received under the reporting requirements of § 219.801 for two consecutive calendar years indicate that the violation rate is less than 0.5 percent.

(2) When the minimum annual percentage rate for random alcohol testing is 50 percent, the Administrator may lower this rate to 25 percent of all covered employees if the Administrator determines that the data received under the reporting requirements of § 219.801 for two consecutive calendar years indicate that the violation rate is less than 1.0 percent but equal to or greater than 0.5 percent.

(d)(1) When the minimum annual percentage rate for random alcohol testing is 10 percent, and the data received under the reporting requirements of § 219.801 for that calendar year indicate that the violation rate is equal to or greater than 0.5 percent, but less than 1.0 percent, the Administrator will increase the minimum annual percentage rate for random alcohol testing to 25 percent of all covered employees.

(2) When the minimum annual percentage rate for random alcohol testing is 25 percent or less, and the data received under the reporting requirements of § 219.801 for any calendar year indicate that the violation rate is equal to or greater than 1.0 percent, the Administrator will increase the minimum annual percentage rate for random alcohol testing to 50 percent of all covered employees.

(e) The railroad shall randomly select and test a sufficient number of covered employees for testing during each calendar year to equal an annual rate not less than the minimum annual percentage rate for random alcohol testing determined by the Administrator. If the railroad conducts random alcohol testing through a consortium, the number of employees to be tested may be calculated for each individual employer or may be based on the total number of covered employees covered by the consortium who are subject to random testing at the same minimum

annual percentage rate under this part or any DOT alcohol testing rule.

(f) If a railroad is required to conduct random alcohol testing under the alcohol testing rules of more than one DOT agency, the railroad may—

(1) Establish separate pools for random selection, with each pool containing the covered employees who are subject to testing at the same required rate; or

(2) Randomly select such employees for testing at the highest percentage rate established for the calendar year by any DOT agency to which the railroad is subject.

[59 FR 7464, Feb. 15, 1994]

§ 219.609 Participation in alcohol testing.

A railroad shall, under the conditions specified in this subpart and subpart H of this part, require a covered employee selected through the random testing program to cooperate in breath testing to determine compliance with § 219.101, and the employee shall provide the required breath and complete the required paperwork and certifications. Compliance by the employee shall be excused only in the case of a documented medical or family emergency.

[59 FR 7464, Feb. 15, 1994]

§ 219.611 Test result indicating prohibited alcohol concentration; procedures.

Procedures for administrative handling by the railroad in the event an employee's confirmation test indicates an alcohol concentration of .04 or greater are set forth in § 219.104.

[59 FR 7464, Feb. 15, 1994]

Subpart H—Procedures and Safeguards for Urine Drug Testing and for Alcohol Testing

§ 219.701 Standards for urine drug testing.

(a) Urine drug testing required or authorized by subparts B, D, F, and G of this part shall be conducted in the manner provided by this subpart and (to the extent not inconsistent with this part) part 40 of subtitle A of this title. Laboratories employed for these purposes must be certified by the Department of Health and Human Services under that Department's Mandatory Guidelines for Federal Workplace Drug Testing Programs.

(b) Each railroad's contract with a laboratory conducting testing subject to this subpart shall provide that the FRA and the railroad shall have the right to unannounced inspection during normal business hours through qualified personnel or designated contractors. Such inspecton rights shall, at minimum, include reasonable accompanied access to all records pertinent to testing under this part, quality control data incident thereto, samples submitted under this part, and equipment and personnel related to analysis of those samples.

(c) Each such contract shall also require that the laboratory comply with all applicable provisions of this part and 49 CFR part 40, including requirements for employee access to specified laboratory records and any applicable conditions imposed upon approvals issued under this subpart or 49 CFR part 40.

§ 219.703 Drug testing procedures.

(a) Urine samples shall be collected and handled as required in 49 CFR part 40 and this section.

(b) The collection site person (collector) shall meet the requirements of 49 CFR part 40.

(c) A person with management or supervisory responsibility over the employee to be tested, or a co-worker of the employee to be tested, may not serve as a collector. For purposes of this paragraph, *co-worker* means a person with whom the person to be tested is assigned or could be assigned in a crew or other working unit to perform normal transportation duties on the railroad.

(d) If an employee fails to provide a urine specimen within a reasonable time and is to be given a subsequent opportunity to provide a specimen under the conditions described in 49 CFR 40.25, the subsequent collection shall be conducted either—

(1) Immediately upon the expiration of the employee's required off-duty period under the Hours of Service Act (45 U.S.C. 62–64b); or

(2) On an unannounced basis within the next 30 days.

[54 FR 53259, Dec. 27, 1989, as amended at 59 FR 7464, Feb. 15, 1994]

§ 219.705 Drugs tested.

(a) Urine samples shall be analyzed for the presence of controlled substances designated in paragraph (b) of this section and may be analyzed by procedures reasonably incident to analysis of the specimen for controlled substances (e.g., determination of pH or tests for specific gravity, creatinine concentration, or presence of adulterants).

(b) Each sample submitted shall be analyzed for marijuana, cocaine, phencylidine (PCP), opiates (morphine and codeine), and amphetamines (amphetamine and methamphetamine).

(c) As part of the reasonable cause testing program established by subpart D of this part, a railroad may test for additional controlled substances in addition to those specified in this section only with approval granted by FRA and for substances for which the Department of Health and Human Services has established an approved testing protocol and positive threshold.

§ 219.707 Review by MRO of urine drug testing results.

(a) Urine drug test results reported positive by the laboratory as provided in part 40 of this title shall not be deemed positive or disseminated to any person (other than to the employee tested in a medical interview, if conducted) until they are reviewed by a Medical Review Officer (MRO) of the railroad as required by part 40 of this title and this section. For purposes of this part, medical use of controlled substances by a covered employee is a legitimate medical explanation for presence of a controlled substance (i.e., a basis for declaring the result ''negative'') only to the extent such use was consistent with § 219.103 of this part.

(b) The MRO shall complete review of test results within not more than 10 regular working days of receipt of the laboratory report or they shall be declared negative, unless any portion of the delay shall result from the unwillingness or inability of the employee to appear for an interview or provide documentation of prescription or other authorized use of medications. If the employee is responsible for such delay, the 10-day period may be extended by a period equal to the period attributed to the employee's delay. This paragraph shall not be read to bar reporting of a positive result if the employee, without a reasonable basis, fails to respond to an opportunity to provide supplementary information.

(c) After the MRO has reviewed the pertinent information and the laboratory assessment is verified as indicating presence of controlled substances without medical authorization consistent with § 219.103 of this part (and the review required by paragraph (b) of this section is completed), the MRO shall report the results to a designated railroad officer for action in keeping with the requirements of this part (or take appropriate action under the railroad's medical standards). The employee shall be provided a copy of the approved test results, or such results shall be dispatched by U.S. mail or other suitable means providing prompt delivery, not later than 24 hours following any adverse action.

(d) Test results reported as negative by the laboratory shall also be communicated through the MRO. The MRO shall promptly transmit the negative finding to the employee. If the MRO provides the railroad with negative test results in a nonaggregated manner, all such negative test results, including results involving medical use or administration of controlled substances or insufficiency of laboratory data, shall be transmitted to the designated railroad officer over the MRO's signature in a manner that does not disclose medical use of drugs which is permitted under § 219.103 of this part.

[54 FR 53259, Dec. 27, 1989, as amended at 59 FR 7464, Feb. 15, 1994]

§ 219.708 Employee requests for testing.

If the test result of the primary sample is positive, an employee may request that his or her split sample(s) be tested in accordance with the procedures specified in 49 CFR part 40.

[59 FR 7464, Feb. 15, 1994]

§ 219.709 Retest.

(a) Samples that yield positive results on confirmation shall be retained by the laboratory in properly secured, long-term, frozen storage for at least 365 days, as required by part 40 of this title. Within this 365-day period, the employee or his representative, the railroad, or the FRA may request that the laboratory retain the sample for an additional period. If, within the 365-day period, the laboratory has not received a proper written request to retain the sample for a further reasonable period specified in the request, the sample may be discarded following the end of the 365-day period.

(b) In the case of a test declared positive by the MRO, the original sample shall be retested if the employee makes a written request to the Medical Review Officer for retesting within 60 days. The employee may specify retesting by the original laboratory or by a second laboratory that is certified by the Department of Health and Human Services as described in 49 CFR part 40. The railroad may require the employee to advance the cost of shipment (if any) and reanalysis of the sample, but the employee shall be reimbursed for such expense if the retest is negative.

(c) If the employee specifies retesting by a second laboratory, the original laboratory shall follow approved chain-of-custody procedures in transferring a portion of the sample.

(d) Any retest of a sample is subject to 49 CFR 40.29(i) (quantitation for retest not subject to cutoff requirement due to deterioration or loss of analytes).

§ 219.711 Confidentiality of test results.

(a) A laboratory reporting results of tests conducted under this subpart shall report those results only to the designated Medical Review Officer of the railroad. The results shall not be disclosed by the laboratory to any other person, except that the laboratory may affirm the test result to the employee to whom the sample was identified. This paragraph shall not be read to bar normal access to analytical data for laboratory accreditation or certification processes.

(b) The MRO may not disclose medically approved drug use or administration information obtained under this part (whether ascertained through testing or reported by the employee or the employee's medical practitioner at the employee's request) to non-medical railroad personnel or any third party; however, nothing in this part bars use of such information by the railroad's medical officer in the context of an established medical qualifications program. This paragraph shall not be construed to permit medical disqualification of an employee based upon a laboratory report indicating presence of a controlled substance prior to completion of the MRO review, nor to limit the discretion of the railroad under § 40.33(c) of this chapter.

(c) No record of tests conducted subject to this subpart or information drawn therefrom shall be used or disseminated by the railroad or within the railroad for any purpose other than providing for compliance with this part (and railroad rules consistent herewith), unless with the voluntary written consent of the employee. Such written consent shall specify the person to whom the information may be provided. Each railroad shall adopt and implement procedures to guard this information against unauthorized disclosure both within and external to the railroad company.

§ 219.713 [Reserved]

§ 219.715 Alcohol testing procedures.

(a) Each covered employee who is notified of selection for alcohol testing and who is not performing covered service at the time of notification shall proceed to the testing site immediately. The railroad shall ensure that an employee who is performing covered service at the time of notification shall, as soon as possible without affecting safety, cease to perform covered service and proceed to the testing site.

(b) Each railroad shall ensure that all alcohol testing conducted under this part complies with the procedures set

forth in part 40 of this title. The provisions of part 40 of this title that address alcohol testing are made applicable to employers by this part.

[59 FR 7464, Feb. 15, 1994]

Subpart I—Annual Report

§ 219.801 Reporting alcohol misuse prevention program results in a management information system.

(a) Each railroad that has 400,000 or more total manhours shall submit to FRA by March 15 of each year a report covering the previous calendar year (January 1–December 31), summarizing the results of its alcohol misuse prevention program.

(b) A railroad that is subject to more than one DOT agency alcohol regulation shall identify each employee covered by the regulations of more than one DOT agency. The identification will be by the total number and category of covered functions. Prior to conducting any alcohol test on a covered employee subject to the regulations of more than one DOT agency, the railroad shall determine which DOT agency regulation or rule authorizes or requires the test. The test result information shall be directed to the appropriate DOT agency or agencies.

(c) Each railroad shall ensure the accuracy and timeliness of each report submitted. The report shall be submitted on one of the two forms specified by the FRA.

(d) Each report that contains information on an alcohol screening test result of .02 or greater or a violation of the alcohol misuse provisions of subpart B of this part shall include the following elements (the ''Alcohol Testing Management Information System Data Collection Form,'' appendix D3 to this part):

(1) Number of covered employees by employee category (*i.e.*, train service, engine service, dispatcher/operator, signal, other).

(2) Number of covered employees in each category subject to alcohol testing under the alcohol misuse regulation of another DOT agency, identified by each agency.

(3)(i) Number of screening tests by type of test (*i.e.*, pre-employment and covered service transfer, random, post-positive return to service, and follow-up) and employee category.

(ii) Number of confirmation tests, by type of test and employee category.

(4) Number of confirmation alcohol tests indicating an alcohol concentration equal of .02 or greater but less than .04, by type of test and employee category.

(5) Number of confirmation alcohol tests indicating an alcohol concentration of .04 or greater, by type of test and employee category.

(6) Number of persons denied a position as a covered employee following a pre-employment alcohol test indicating an alcohol concentration of .04 or greater.

(7) Number of covered employees with a confirmation alcohol test indicating an alcohol concentration of .04 or greater, or who have violations of other alcohol misuse provisions, who were returned to service in covered positions (having complied with the recommendations of a substance abuse professional as described in § 219.104(d)).

(8) For cause breath alcohol testing under railroad authority, by reason for test (accident/injury or rules violation), the number of screening tests conducted, the number of confirmation tests conducted, the number of confirmation tests of .02 or greater but less than .04, and the number of confirmation test results of .04 or greater.

(9) For cause breath alcohol testing under FRA authority, by reason for test (reasonable suspicion, accident/injury or rules violation), the number of screening tests conducted, the number of confirmation tests conducted, the number of confirmation tests of .02 or greater but less than .04, and the number of confirmation test results of .04 or greater.

(10) Number of covered employees who were found to have violated other provisions of subpart B of this part, and the action taken in response to the violation.

(11) Number of covered employees who were administered alcohol and drug tests at the same time, with both a positive drug test result and an alcohol test result indicating an alcohol concentration of .04 or greater.

(12) Number of covered employees who refused to submit to a random alcohol test required under this part.

(13) Number of covered employees who refused to submit to a non-random alcohol test required under this part.

(14) Number of supervisory personnel who have received the required initial training on the specific contemporaneous physical, behavioral, and performance indicators of probable alcohol use during the reporting period.

(e) Each report that contains no screening test results of 0.02 or greater or violations of the alcohol misuse provisions of subpart B of this part shall include the following informational elements (the ''Alcohol Testing Management Information System Data Collection Form (No Alcohol Misuse),'' appendix D4 to this part): (This report may only be submitted if the program results meet this criteria.)

(1) Number of covered employees by employee category (*i.e.*, train service, engine service, dispatcher/operator, signal, other).

(2) Number of covered employees in each category subject to alcohol testing under the alcohol misuse regulation of another DOT agency, identified by each agency.

(3) Number of screening tests by type of test (*i.e.*, pre-employment and covered service transfer, random, post-positive return to service, and follow-up) and employee category.

(4) Number of covered employees with a confirmation alcohol test indicating an alcohol concentration of .04 or greater, or who have violations of other alcohol misuse provisions, who were returned to service in covered positions (having complied with the recommendations of a substance abuse professional as described in § 219.104(d)).

(5) For cause breath alcohol testing under railroad authority, by reason for test (accident/injury or rules violation), the number of screening tests conducted.

(6) For cause breath alcohol testing under FRA authority, by reason for test (reasonable suspicion, accident/injury or rules violation), the number of screening tests conducted.

(7) Number of covered employees who refused to submit to a random alcohol test required under this part.

(8) Number of covered employees who refused to submit to a non-random alcohol test required under this part.

(9) Number of supervisory personnel who have received the required initial training on the specific contemporaneous physical, behavioral, and performance indicators of probable alcohol use during the reporting period.

(f) Annual reporting for calendar year 1993 and prior years shall be governed by the provisions of § 217.13 of this chapter in effect during the subject calendar period.

[59 FR 7465, Feb. 15, 1994]

§ 219.803 Reporting drug misuse prevention program results in a management information system.

(a) Each railroad with more than 400,000 total manhours shall submit to FRA an annual report covering the calendar year, summarizing the results of its drug misuse prevention program.

(b) A railroad that is subject to more than one DOT agency drug regulation shall identify each employee covered by the regulations of more than one DOT agency. The identification will be by the total number and category of covered functions. Prior to conducting any drug test on a covered employee subject to the regulations of more than one DOT agency, the railroad shall determine which DOT agency regulation or rules authorizes or requires the test. The test result information shall be directed to the appropriate DOT agency or agencies.

(c) Each railroad shall ensure the accuracy and timeliness of each report submitted by the railroad or a consortium.

(d) Each railroad shall submit the required annual reports no later than March 15 of each year. The report shall be submitted on one of the forms specified by the FRA. A railroad with no positive test results shall submit the ''Drug Testing Management Information System Zero Positives Data Collection Form'' form attached as appendix D2 to this part. All other railroads shall submit the ''Drug Testing Management Information System Data Collection Form'' attached as appendix D to this part.

(e) A railroad submitting the ''Drug Testing Management Information System Data Collection Form'' shall address each of the following data elements:

(1) Number of covered employees by employee category (*i.e.*, train service, engine service, dispatcher/operator, signal service, other).

(2) Number of covered employees in each category subject to testing under the anti-drug regulations of more than one DOT agency, identified by each agency.

(3) Number of specimens collected by type of test (ie., pre-employment and covered service transfer, random, post-positive return to service, and follow-up), and employee category.

(4) Number of specimens verified negative by a Medical Review Officer (MRO) by type of test, and employee category.

(5) Number of specimens verified positive for one or more of the five drugs by a MRO by type of test, employee category, and type of drug. If a test has been verified positive by a MRO for multiple drugs, the employer should report the result as a positive for each type of drug.

(6) Number of applicants or transfers denied employment or transfer to a covered service position following a verified positive pre-employment drug test.

(7) Number of employees, currently in or having completed rehabilitation or otherwise qualified to return to duty, who have returned to work in a covered position during the reporting period.

(8) For cause drug testing, the number of specimens collected by reason for test (*i.e.*, accident/injury, rules violation, or reasonable suspicion), type of authority (railroad or FRA), employee category and type of drug, including drugs tested for under railroad authority only.

(9) For cause drug testing, the number of specimens verified negative by a MRO by reason for test, type of authority, employee category and type of drug, including drugs tested for under railroad authority only.

(10) For cause drug testing, the number of specimens verified positive by a MRO by reason for test, type of authority, employee category and type of drug, including drugs tested for under railroad authority only.

(11) For cause breath alcohol testing under railroad authority, by reason for test, the number of tests conducted, the number of tests with a positive result (*i.e.*, breath alcohol concentration (BAC) = or > .02), and the number of refusals.

(12) For cause urine alcohol testing under railroad authority, by reason for test, the number of tests conducted, the number of tests with a positive result, and the number of refusals.

(13) For cause breath alcohol testing under FRA authority, by reason for test, the number of tests conducted, the number of tests with a positive result, and the number of refusals.

(14) Total number of covered employees observed in documented operational tests and inspections related to enforcement of the railroad's rules on alcohol and drug use.

(15) Based on the tests and inspections described in element 14, the number of covered employees charged with a violation of the railroad's Rule G or similar rule or policy on drugs.

(16) Based on the tests and inspections described in element 14, the number of covered employees charged with a violation of the railroad's Rule G or similar rule or policy on alcohol.

(17) Number of specimens verified positive for more than one drug, by employee category and type of drug.

(18) Number of covered employees who refused to submit to a random drug test required under FRA authority.

(19) Number of covered employees who refused to submit to a non-random drug test required under FRA authority.

(20) Number of supervisory personnel who have received the required initial training on the specific contemporaneous physical, behavioral, and performance indicators of probable drug use during the reporting period.

(f) A railroad authorized to submit the ''Drug Testing Management Information System Zero Positives Data Collection Form'' attached as appendix D2 to this part shall address each of the following data elements:

(1) Number of covered employees by employee category (*i.e.*, train service, engine service, dispatcher/operator, signal service, other).

(2) Number of covered employees in each category subject to testing under the anti-drug regulations of more than one DOT agency, identified by each agency.

(3) Number of specimens collected and verified negative by type of test (*i.e.*, pre-employment and covered service transfer, random, for cause due to accident/incident, for cause due to rules violation, reasonable suspicion, post-positive return to service, and follow-up), and employee category.

(4) For cause breath alcohol testing under railroad authority, the number of tests conducted by reason for test (*i.e.*, accident/injury, rules violation, or reasonable suspicion).

(5) For cause urine alcohol testing under railroad authority, the number of tests conducted by reason for test.

(6) For cause breath alcohol testing under FRA authority, the number of tests conducted by reason for test.

(7) Total number of covered employees observed in documented operational tests and inspections related to enforcement of the railroad's rules on alcohol and drug use.

(8) Based on the tests and inspections described in element 7, the number of covered employees charged with a violation of the railroad's Rule G or similar rule or policy on drugs.

(9) Based on the tests and inspections described in element 7, the number of covered employees charged with a violation of the railroad's Rule G or similar rule or policy on alcohol.

(10) Number of covered employees who refused to submit to a random drug test required under FRA authority.

(11) Number of covered employees who refused to submit to a non-random drug test required under FRA authority.

(12) Number of supervisory personnel who have received the required initial training on the specific contemporaneous physical, behavioral, and performance indicators of probable drug use during the reporting period.

[58 FR 68235, Dec. 23, 1993]

Subpart J—Recordkeeping Requirements

SOURCE: 59 FR 7466, Feb. 15, 1994, unless otherwise noted.

§ 219.901 Retention of breath alcohol testing records.

(a) *General requirement.* Each railroad shall maintain records of its alcohol misuse prevention program as provided in this section. The records shall be maintained in a secure location with controlled access.

(b) *Period of retention.* Each railroad shall maintain the records in accordance with the following schedule:

(1) *Five years.* The following shall be maintained for a minimum of five years:

(i) Records of alcohol test results with results indicating an alcohol concentration of .02 or greater, documentation of refusals to take required alcohol tests, calibration documentation, and employee evaluation and referrals;

(ii) A summary record of each covered employee's test results; and

(iii) A copy of the annual report summarizing the results of its alcohol misuse prevention programs (if required to submit under § 219.801(a).

(2) *Two years.* Records related to the collection process (except calibration of evidential breath testing devices) and training shall also be maintained for a minimum of two years.

(3) *One year.* Records of all test results below .02 shall be maintained for a minimum of one year.

(c) *Types of records.* The following specific records must be maintained.

(1) Records related to the collection process:

(i) Collection logbooks, if used.

(ii) Documents relating to the random selection process.

(iii) Calibration documentation for evidential breath testing devices.

(iv) Documentation of breath alcohol technician training.

(v) Documents generated in connection with decisions to administer reasonable suspicion alcohol tests.

(vi) Documents generated in connection with decisions on post-accident testing.

(vii) Documents verifying the existence of a medical explanation of the inability of a covered employee to provide an adequate breath sample.

(2) Records related to test results:

(i) The railroad's copy of the alcohol test form, including the results of the test.

(ii) Documents related to the refusal of any covered employee to submit to an alcohol test required by this part.

(iii) Documents presented by a covered employee to dispute the result of an alcohol test administered under this part.

(3) Records related to other violations of this part.

(4) Records related to evaluations:

(i) Records pertaining to a determination by a substance abuse professional concerning a covered employee's need for assistance.

(ii) Records concerning a covered employee's compliance with the recommendations of the substance abuse professional.

(5) Records related to evaluation and training:

(i) Materials on drug misuse awareness, including a copy of the railroad's policy on drug misuse.

(ii) Documentation of compliance with the requirements of § 219.23.

(iii) Documentation of training provided to supervisors for the purpose of qualifying the supervisors to make a determination concerning the need for alcohol testing based on reasonable suspicion.

(iv) Certification that any training conducted under this part complies with the requirements for such training.

§ 219.903 Retention of urine drug testing records.

(a) *General requirement.* Each railroad shall maintain records of its drug misuse prevention program as provided in this section. The records shall be maintained in a secure location with controlled access.

(b) *Period of retention.* Each railroad shall maintain the records in accordance with the following schedule:

(1) *Five years.* The following shall be maintained for a minimum of five years:

(i) Records of employee positive drug test results, documentation of refusals to take required drug tests, and employee evaluation and referral;

(ii) A summary record of each covered employee's test results; and

(iii) A copy of the annual report summarizing the results of its drug misuse prevention program (if required to submit under § 219.803(a).

(2) *Two years.* Records related to the collection process and training shall be maintained for a minimum of two years.

(3) *One year.* Records of negative test results (as defined in Part 40 of this title) shall be maintained for a minimum of one year.

(c) *Types of records.* The following specific records must be maintained.

(1) Records related to the collection process:

(i) Documents relating to the random selection process.

(ii) Documents generated in connection with decisions to administer reasonable suspicion drug tests.

(iii) Documents generated in connection with decisions on post-accident testing.

(iv) Documents verifying the existence of a medical explanation of the inability of a covered employee to provide a urine sample.

(2) Records related to test results:

(i) The railroad's copy of the drug test custody and control form, including the results of the test.

(ii) Documents related to the refusal of any covered employee to submit to a drug test required by this part.

(iii) Documents presented by a covered employee to dispute the result of a drug test administered under this part.

(3) Records related to other violations of this part.

(4) Records related to evaluations:

(i) Records pertaining to a determination by a substance abuse professional concerning a covered employee's need for assistance.

(ii) Records concerning a covered employee's compliance with the recommendations of the substance abuse professional.

(5) Records related to evaluation and training:

(i) Materials on alcohol misuse awareness, including a copy of the railroad's policy on alcohol misuse.

(ii) Documentation of compliance with the requirements of § 219.23.

(iii) Documentation of training provided to supervisors for the purpose of qualifying the supervisors to make a determination concerning the need for alcohol testing based on reasonable suspicion.

(iv) Certification that any training conducted under this part complies with the requirements for such training.

§ 219.905 Access to facilities and records.

(a) Release of covered employee information contained in records required to be maintained under §§ 219.901 and 219.903 shall be in accordance with 49 CFR part 40 and this section. (For purposes of this section only, urine drug testing records shall be considered equivalent to breath alcohol testing records.)

(b) Each railroad shall permit access to all facilities utilized in complying with the requirements of this part to the Secretary of Transportation or any DOT agency with regulatory authority over the railroad or any of its covered employees.

(c) Each railroad shall make available copies of all results for railroad alcohol and drug testing programs conducted under this part and any other information pertaining to the railroad's alcohol and drug misuse prevention program, when requested by the Secretary of Transportation or any DOT agency with regulatory authority over the railroad or covered employee.

APPENDIX A TO PART 219—SCHEDULE OF CIVIL PENALTIES [1]

Section	Violation	Willful Violation
Subpart A—General		
219.11 General Conditions for Chemical Tests (b)(1), (3), or (4) Employee unlawfully refuses to participate in testing.	(—)	$5,000
(b)(2) Failure to give necessary medical treatment priority, or improperly requiring urine sample	$3,000	8,000
219.23 Notice to employees:		
(a) Failure to give notice of FRA test	1,000	4,000

APPENDIX A TO PART 219—SCHEDULE OF CIVIL PENALTIES [1]—Continued

Section	Violation	Willful Violation
(b) Failure to give notice of basis for FRA test	500	2,000
(c) Use of Subpart C forms for other types of tests	500	1,000
Subpart B—Prohibitions		
219.101 Alcohol and drug use Employee violates prohibition	(—)	10,000
219.104 Responsive action:		
(a) Failure to remove from service immediately	3,000	8,000
(b) Failure to provide notice	1,000	4,000
(c) Failure to provide prompt post-suspension hearing	2,000	7,000
(d) Unlawful return to service	2,000	7,000
(e) Improper alcohol test	1,000	4,000
219.105 Railroad's duty to prevent violations:		
(a) Permitting employee to go or remain on duty in violation of prohibitions	7,000	10,000
(b) Failure to exercise due diligence to assure compliance with prohibition	2,500	5,000
Subpart—C: Post-Accident Testing		
219.201 Events for which testing is required:		
(i) Failure to facilitate conduct of required post-accident toxicological test by making reasonable inquiry and good faith judgments with respect to circumstances of accident/incident; by failing to take all practicable steps to require employee participation; or by otherwise failing to comply with Subpart C such that test cannot be conducted (each employee not tested is a violation	5,000	7,500
(ii) Required employee to provide samples under authority of Subpart C where one or more testing criteria not present, due either to mistake of law or failure to make reasonable inquiry or exercise good faith judgment	5,000	10,000
(iii) Failure to promptly provide FRA with report describing decision on whether event qualified for testing	1,000	3,000
219.203 Responsibilities of Railroads and Employees:		
(a) Failure to exclude employee from impact of fatal train incident testing where appropriate	2,500	5,000
(b)(1) Delay in obtaining samples account failure to make every reasonable effort	2,500	5,000
(b)(4) Improper release of or failure to recall employee subject to testing, or improper recall to duty	4,000	7,500
(c) Place of sample collection; by whom	2,500	5,000
(d) Failure to notify FRA of an employee injury requiring FRA intervention	2,500	5,000

APPENDIX A TO PART 219—SCHEDULE OF CIVIL PENALTIES [1]—Continued

Section	Violation	Willful Violation
219.205 Sample collection and handling:		
(a) Failure to observe requirements with respect to sample collection, marking and handling	2,500	5,000
(b) Failure to provide properly prepared information sheets with samples	1,000	2,000
(d) Failure to promptly forward samples	2,500	5,000
219.207 Fatality:		
(a) Failure to contact custodian and request assistance	2,500	5,000
(b) Failure to notify FRA where intervention needed	2,500	5,000
219.209 Reports of tests and refusals:		
(a) Failure to provide telephonic report	1,000	2,000
(b) Failure to provide written report (samples not provided)	1,000	2,000
219.213 Unlawful refusals, consequences:		
(a) Failure to take action against employee who refuses to provide samples, or permitting employee to return without meeting conditions	2,500	5,000
(b), (c) Failure to provide timely notice and proper hearing	2,500	5,000
Subpart D—Authorization to test for casue		
219.301 Testing for reasonable cause:		
(a) Employee required, under authority of this subpart, to submit to testing without reasonable cause	5,000	7,500
(f)(2) Employee required to participate in testing after expiration of 8 hours	2,000	4,000
(f)(4) Employee tested after release from duty	1,500	3,000
219.303 Breath testing procedures and safeguards (incl. optional blood test)	2,000	4,000
219.305 Urine test: failure to comply with Subpart H procedures and safeguards	2,000	4,000
219.309 Employee notice	1,000	4,000
Subpart E—Identification of troubled employees		
219.401 Requirements for policies:		
(i) Failure to adopt or publish or wholesale failure to implement policy required by Subpart E	5,000	7,500
(ii) Failure to implement as to individual employee	2,500	5,000
219.407 Alternate policies: Failure to file agreement or other document or provide timely notice of revocation	1,000	2,000
Subpart F—Pre-Employment Drug Screen		
219.501 Pre-employment drug screens:		
(a) Failure to perform preemployment drug screen prior to employing applicant in covered service	2,500	5,000
(b)(i) Failure to provide prior notice of drug screen	2,000	4,000
(ii) Maintaining record of declination of test	500	1,000
(c) Failure to comply with Subpart H—Procedures and safeguards	2,000	4,000
219.503 Notification; records Failure to notify applicant of test results or to proplerly maintain or retain records	2,000	4,000
219.505 Refusals; consequences of positive:		
(a) Employing one who has refused test in covered service	2,500	5,000
(b) Employing applicant who has tested positive in covered service	3,000	8,000
Subpart G—Random Drug Testing		
219.601 Programs:		
(a) Failure to submit to FRA on a timely basis a random testing program that satisfies requirements of this subpart and subpart H	5,000	7,500
(b)(1) Required employee to provide sample in reliance on this subpart based on other than random selection	5,000	10,000
(b)(2) through (b)(7) Fail to conform to approved criteria in implementing program	2,000	4,000
(d)(1) Failure to provide timely notice to each employee	1,000	4,000
(d)(2) Failure to implement program on timely basis	5,000	7,500
219.603 Participation in testing; refusals:		
(a) Failure to require a selected employee to cooperate in random testing	2,500	5,000
(b)(1) Failure to take action against employee who refuses to provide sample	2,500	5,000
(b)(2) Failure to provide timely notice and proper hearing	2,500	5,000
(c) Permitting employee to return without meeting conditions	2,500	5,000
219.605 Positive test results: (a) Test deemed positive without following Subpart H procedures	2,000	4,000
Subpart H—Procedures and Safeguards For Urine Drug Testing		
219.701 Standards for urine drug testing (e.g., use of uncertified lab or other violation of 49 CFR part 40 not referenced below, absence of required provisions in contract, etc.).	5,000	7,500
219.703 Collection	2,000	4,000
219.705 Drugs tested	2,000	4,000
219.707 Review by MRO	2,000	4,000
219.709 Retest	2,000	4,000
219.711 Confidentiality	3,000	6,000
219.713 Reports; FRA access	500	2,000

[1] A penalty may be assessed against an individual only for a willful violation. The Administrator reserves the right to assess a penalty of up to $20,000 for any violation where circumstances warrant. See 49 CFR part 209, appendix A.

[54 FR 53259, Dec. 27, 1989, as amended at 55 FR 22794, June 4, 1990]

APPENDIX B TO PART 219—DESIGNATION OF LABORATORY FOR POST-ACCIDENT TOXICOLOGICAL TESTING

The following laboratory is currently designated to conduct post-accident toxicological analysis under Subpart C of this part: Northwest Toxicology, Inc., 1141 E. 3900 S., Suite A–110, Salt Lake City, UT 84124, telephone: (801) 288–2431 (Day), (801) 483–3383 (Night/Weekend).

[60 FR 61665, Dec. 1, 1995]

APPENDIX C TO PART 219—POST-ACCIDENT TESTING SAMPLE COLLECTION

1.0 *General.*

This appendix prescribes procedures for collection of samples for mandatory post-accident testing pursuant to subpart C of this part. Collection of blood and urine samples is required to be conducted at an independent medical facility.

(SURVIVING EMPLOYEES)

2.0 *Surviving Employees.*

This unit provides detailed procedures for collecting post-accident toxicological samples from surviving employees involved in train accidents and train incidents, as required by 49 CFR part 219, subpart C. Subpart C specifies qualifying events and employees required to be tested.

2.1 *Collection Procedures; General.*

All forms and supplies necessary for collection and transfer of blood and urine samples for three surviving employees can be found in the FRA post-accident shipping box, which is made available to the collection site by the railroad representative.

Each shipping box contains supplies for blood/urine collections from three individuals, including instructions and necessary forms. The railroad is responsible for ensuring that materials are fresh, complete and meet FRA requirements.

2.11 *Responsibility of the Railroad Representative.*

In the event of an accident/incident for which testing is required under subpart C of this part, the railroad representative shall follow the designated set of instructions, and, upon arrival at the independent medical facility, promptly present to the collection facility representative a post-accident shipping box or boxes with all remaining sets of instructions. (Each box contains supplies to collect samples from three employees.) The railroad representative shall request the collection facility representative to review the instructions provided and, through qualified personnel, provide for collection of the samples according to the procedures set out.

The railroad representative shall undertake the following additional responsibilities—

- Complete FRA Form 6180.73 (revised), Accident Information Required for Post-Accident Toxicological Testing, describing the testing event and identifying the employees whose samples are to be deposited in the shipping box.
- As necessary to verify the identity of individual employees, affirm the identity of each employee to the medical facility personnel.
- Consistent with the policy of the collection facility, monitor the progress of the collection procedure.

WARNING: Monitor but do not directly observe urination or otherwise disturb the privacy of urine or blood collection. Do not handle sample containers, bottles or tubes (empty or full). Do not become part of the collection process.

2.12 *Employee Responsibility.*

An employee who is identified for post-accident toxicological testing shall cooperate in testing as required by the railroad and personnel of the independent medical facility. Such cooperation will normally consist of the following, to be performed as requested:

- Provide a blood sample, which a qualified medical professional or technician will draw using a single-use sterile syringe. The employee should be seated for this procedure.
- Provide, in the privacy of an enclosure, a urine sample into a plastic collection cup. Deliver the cup to the collector.
- Do not let the blood and urine samples that you provided leave your sight until they have been properly sealed and initialed by you.
- Certify the statement in Step 4 of the Blood/Urine Custody and Control Form (FRA Form 6180.74 (revised)).
- If required by the medical facility, complete a separate consent form for taking of the samples and their release to FRA for analysis under the FRA rule.

NOTE: The employee may not be required to complete any form that contains any waiver of rights the employee may have in the employment relationship or that releases or holds harmless the medical facility with respect to negligence in the collection.

2.2 *The Collection.*

Exhibit C–1 contains instructions for collection of samples for post-accident toxicology from surviving employees. These instructions shall be observed for each collection. Instructions are also contained in each

post-accident shipping box and shall be provided to collection facility personnel involved in the collection and/or packaging of samples for shipment.

(POST MORTEM COLLECTION)

3.0 *Fatality.*

This unit provides procedures for collecting post-accident body fluid/tissue samples from the remains of employees killed in train accidents and train incidents, as required by 49 CFR part 219, subpart C. Subpart C specifies qualifying events and employees required to be tested.

3.1 *Collection.*

In the event of a fatality for which testing is required under subpart C, the railroad shall promptly make available to the custodian of the remains a post-accident shipping box. The railroad representative shall request the custodian to review the instructions contained in the shipping box and, through qualified medical personnel, to provide the samples as indicated.

(SURVIVING EMPLOYEES AND FATALITIES)

4.0 *Shipment.*

The railroad is responsible for arranging overnight transportation of the sealed shipping box containing the samples. When possible without incurring delay, the box should be delivered directly from the collection personnel providing the samples to an overnight express service courier. If it becomes necessary for the railroad to transport the box from point of collection to point of shipment, then—

1. Individual kits and the shipping box shall be sealed by collection personnel before the box is turned over to the railroad representative;
2. The railroad shall limit the number of persons handling the shipping box to the minimum necessary to provide for transportation;
3. If the shipping box cannot immediately be delivered to the express carrier for transportation, it shall be maintained in secure temporary storage; and
4. The railroad representatives handling the box shall document chain of custody of the shipping box and shall make available such documentation to FRA on request.

EXHIBIT C–1—INSTRUCTIONS FOR COLLECTION OF BLOOD AND URINE SAMPLES: MANDATORY POST-ACCIDENT TOXICOLOGICAL TESTING

A. Purpose

These instructions are for the use of personnel of collection facilities conducting collection of blood and urine samples from surviving railroad employees following railroad accidents and casualties that qualify for mandatory alcohol/drug testing. The Federal Railroad Administration appreciates the participation of medical facilities in this important public safety program.

B. Prepare for Collection

Railroad employees have consented to provision of samples for analysis by the Federal Railroad Administration as a condition of employment (49 CFR 219.11). A private, controlled area should be designated for collection of samples and completion of paperwork.

Only one sample should be collected at a time, with each employee's blood draw or urine collection having the complete attention of the collector until the specific sample has been labeled, sealed and documented.

Please remember two critical rules for the collections:

All labeling and sealing must be done in the sight of the donor, with the sample never having left the donor's presence until the sample has been labeled, sealed and initialled by the donor.

Continuous custody and control of blood and urine samples must be maintained and documented on the forms provided. In order to do this it is important for the paperwork and the samples to stay together.

To the extent practical, blood collection should take priority over urine collection. To limit steps in the chain of custody, it is best if a single collector handles both collections from a given employee.

You will use a single Post-Accident Testing Blood/Urine Custody and Control Form (FRA Form 6108.74 (revised)), consisting of six Steps to complete the collection for each employee. We will refer to it as the Control Form.

C. Identify the Donor

The employee donor must provide photo identification to each collector, or lacking this, be identified by the railroad representative.

The donor should remove all unnecessary outer garments such as coats or jackets, but may retain valuables, including wallet. Donors should not be asked to disrobe, unless necessary for a separate physical examination required by the attending physician.

D. Draw Blood

Assemble the materials for collecting blood from each employee: two 10 ml grey-stoppered blood tubes and the Control Form.

Ask the donor to complete STEP 1 on the Control Form.

With the donor seated, draw two (2) 10 ml tubes of blood using standard medical procedures (sterile, single-use syringe into evacuated gray-top tubes provided). CAUTION: Do not use alcohol or an alcohol-based swab to cleanse the venipuncture site.

Once both tubes are filled and the site of venipuncture is protected, immediately—

• Seal and label each tube by placing a numbered blood sample label from the label set on the Control Form over the top of the tube and securing it down the sides.

• Ask the donor to initial each label. Please check to see that the initials match the employee's name and note any discrepancies in the ''Remarks'' block of the Control Form.

• As collector, sign and date each blood tube label at the place provided.

• Skip to STEP 5 and initiate chain of custody for the blood tubes by filling out the first line of the block to show receipt of the blood samples from the donor.

• Complete STEP 2 on the form.

• Return the blood tubes into the individual kit. Keep the paperwork and samples together. If another collector will be collecting the urine sample from this employee, transfer both the form and the individual kit with blood tubes to that person, showing the transfer of the blood tubes on the second line of STEP 5 (the chain of custody block).

E. Collect Urine

The urine collector should assemble at his/her station the materials for collecting urine from each employee: one plastic collection cup with temperature device affixed enclosed in a heat-seal bag (with protective seal intact), two 90 ml urine sample bottles with caps and one biohazard bag (with absorbent) also enclosed in a heat-seal bag (with protective seal intact), and the Control Form. Blood samples already collected must remain in the collector's custody and control during this procedure.

After requiring the employee to wash his/her hands, the collector should escort the employee directly to the urine collection area. To the extent practical, all sources of water in the collection area should be secured and a bluing agent (provided in the box) placed in any toilet bowl, tank, or other standing water.

The employee will be provided a private place in which to void. Urination will not be directly observed. If the enclosure contains a source of running water that cannot be secured or any material (soap, etc.) that could be used to adulterate the sample, the collector should monitor the provision of the sample from outside the enclosure. Any unusual behavior or appearance should be noted in the remarks section of the Control Form or on the back of that form.

The collector should then proceed as follows:

Unwrap the collection cup in the employee's presence and hand it to the employee (or allow the employee to unwrap it).

Ask the employee to void at least 60 ml into the collection cup (at least to the line marked). Leave the private enclosure.

IF THERE IS A PROBLEM WITH URINATION OR SAMPLE QUANTITY, SEE THE ''TROUBLE BOX'' AT THE BACK OF THESE INSTRUCTIONS

Once the void is complete, the employee should exit the private enclosure and deliver the sample to the collector. Both the collector and the employee must proceed immediately to the labeling/sealing area, with the sample never leaving the sight of the employee before being sealed and labeled.

Upon receipt of the sample, proceed as follows:

• In the full view of the employee, remove the wrapper from the two urine sample bottles. Transfer the urine from the collection cup into the sample bottles (at least 30 ml in bottle A and at least 15 ml in bottle B).

• As you pour the sample into the sample bottles, please inspect for any unusual signs indicating possible adulteration or dilution. Carefully secure the tops. Note any unusual signs under ''remarks'' at STEP 3 of the Control Form.

• Within 4 minutes after the void, measure the temperature of the urine by reading the strip on the bottle. Mark the result at STEP 3 of the Control Form.

IF THERE IS A PROBLEM WITH THE URINE SAMPLE, SEE THE TROUBLE BOX AT THE BACK OF THESE INSTRUCTIONS

• Remove the urine bottle labels from the Control Form. The labels are marked A and B. Place each label as marked over the top of its corresponding bottle, and secure the label to the sides of the bottle.

• Ask the donor to initial each label. Please check to see that the initials match the employee name and note any discrepancy in the ''Remarks'' block of STEP 3.

• As collector, sign and date each urine label.

• Skip to STEP 5 and initiate chain-of-custody by showing receipt of the urine samples from the donor. (If you collected the blood, a check under ''urine'' will suffice. If someone else collected the blood, first make sure transfer of the blood to you is documented. Then, using the next available line, show ''Provide samples'' under purpose, ''Donor'' under ''released by,'' check under ''urine'' and place your name, signature and date in the space provided.)

• Complete the remainder of STEP 3 on the Control Form.

• Have the employee complete STEP 4 on the Control Form.

• Place the filled urine bottles in the individual employee kit. Keep the paperwork and samples together. If another collector will be collecting the blood sample from this employee, transfer both the form and the kit to that person, showing the transfer of the

urine samples on the next available line of STEP 5 (the chain of custody block).

F. Seal the Individual Employee Kit

The blood and urine samples have now been collected for this employee. The blood/urine samples will now be sealed into the individual employee kit, while all paperwork will be retained for further completion. After rechecking to see that each sample is properly labeled and initialled, close the plastic bag to contain any leakage in transportation, and apply the kit security seal to the small individual kit. As collector, sign and date the kit seal.

Before collecting samples from the next employee, complete the next line on the chain-of-custody block showing release of the blood and urine by yourself for the purpose of ''Shipment'' and receipt by the courier service or railroad representative that will provide transportation of the box, together with the date.

G. Complete Treatment Information

Complete STEP 6 of the Control Form. Mark the box if a breath alcohol test was conducted under FRA authority.

H. Prepare the Box for Shipment

Sealed individual employee kits should be retained in secure storage if there will be a delay in preparation of the shipping box. The shipping box shall be prepared and sealed by a collection facility representative as follows:

- Inspect STEP 5 of each Control Form to ensure chain-of-custody is continuous and complete for each fluid (showing samples released for shipment). Retain the medical facility copy of each Control Form and the Accident Information form for your records.
- Place sealed individual employee kits in the shipping box. Place all forms in zip-lock bag and seal securely. Place bag with forms and unused supplies in shipping box.
- Affix the mailing label provided to the outside of the shipping box.

I. Ship the Box

The railroad must arrange to have the box shipped overnight air express or (if express service is unavailable) by air freight, prepaid, to FRA's designated laboratory. Whenever possible without incurring delay, the collector should deliver the box directly into the hands of the express courier or air freight representative.

Where courier pickup is not immediately available at the collection facility where the samples are taken, the railroad is required to transport the shipping box for expeditious shipment by air express, air freight or equivalent means.

If the railroad is given custody of the box to arrange shipment, please record the name of the railroad official taking custody on the copy of Form 6180.73 retained by the collection site.

''TROUBLE BOX''

1. Problem: *The employee claims an inability to urinate, either because he/she has recently voided or because of anxiety concerning the collection.*

Action: The employee may be offered moderate quantities of liquid to assist urination. If the employee continues to claim inability after 4 hours, the urine collection should be discontinued, but the blood samples should be forwarded and all other procedures followed. Please note in area provided for remarks what explanation was provided by the employee.

2. Problem: *The employee cannot provide approximately 60 ml. of sample.*

Action: The employee should remain at the collection facility until as much as possible of the required amount can be given (up to 4 hours). The employee should be offered moderate quantities of liquids to aid urination. The first bottle, if it contains any quantity of urine, should be sealed and securely stored with the blood tubes and Control Form pending shipment. A second bottle should then be used for the subsequent void (using a second Control Form with the words ''SECOND VOID—FIRST SAMPLE INSUFFICIENT'' in the remarks block and labels from that form). However, if after 4 hours the donor's second void is also insufficient or contains no more than the first insufficient void, discard the second void and send the first void to the laboratory.

3. Problem: *The urine temperature is outside the normal range* of 32°–38°C/90°–100°F, and a suitable medical explanation cannot be provided by an oral temperature or other means; or

4. Problem: *The collector observes conduct clearly and unequivocally indicating an attempt to substitute or adulterate the sample* (e.g., substitute urine in plain view, blue dye in sample presented, etc.) and a collection site supervisor or the railroad representative agrees that the circumstances indicate an attempt to tamper with the sample.

Action (for either Problem No. 3 or Problem No. 4): Document the problem on the Control Form. If the collection site supervisor or railroad representative concur that the temperature of the sample, or other clear and unequivocal evidence, indicates a possible attempt to substitute or alter the sample, another void must be taken under direct observation by a collector of the same gender.

If a collector of the same sex is not available, do NOT proceed with this step.

If a collector of the same gender is available, proceed as follows: A new Control Form must be initiated for the second void. The original suspect sample should be marked

''Void 1'' and the follow-up void should be marked ''Void 2,'' with both voids being sent to the laboratory and the incident clearly detailed on the Control Form.

EXHIBIT C–2—INSTRUCTIONS FOR COLLECTION OF POST MORTEM SAMPLES: EMPLOYEE KILLED IN A RAILROAD ACCIDENT/INCIDENT

To the Medical Examiner, Coroner, or Pathologist:

In compliance with Federal safety regulations (49 CFR part 219), a railroad representative has requested that you obtain samples for toxicology from the remains of a railroad employee who was killed in a railroad accident or incident. The deceased consented to the taking of such samples, as a matter of Federal law, by performing service on the railroad (49 CFR 219.11(f)).

Your assistance is requested in carrying out this program of testing, which is important to the protection of the public safety and the safety of those who work on the railroads.

Materials:

The railroad will provide you a post-accident shipping box that contains necessary supplies. If the box is not immediately available, please proceed using supplies available to you that are suitable for forensic toxicology.

Samples requested, in order of preference:

(1) Blood—20 milliliters or more. Preferred sites: intact femoral vein or artery or peripheral vessels (up to 10 ml, as available) and intact heart (20 ml). Deposit blood in gray-stopper tubes individually by site and shake to mix sample and preservative.

NOTE: If uncontaminated blood is not available, bloody fluid or clots from body cavity may be useful for qualitative purposes; but do not label as blood. Please indicate source and identity of sample on label of tube.

(2) Urine—as much as 100 milliliters, if available. Deposit into plastic bottles provided.

(3) Vitreous fluid—all available, deposited into smallest available tube (e.g., 3 ml) with 1% sodium fluoride, or gray-stopper tube (provided). Shake to mix sample and preservative.

(4) If available at autopsy, organs—50 to 100 grams each of two or more of the following in order preference, as available: liver, bile, brain, kidney, spleen, and/or lung. Samples should be individually deposited into zip-lock bags or other clean, single use containers suitable for forensic samples.

(5) If vitreous or urine is not available, please provide—

a. Spinal fluid—all available, in 8 ml container (if available) with sodium fluoride or in gray-stopper tube; or, if spinal fluid cannot be obtained,

b. Gastric content—up to 100 milliliters, as available, into plastic bottle.

Sample collection:

Sampling at time of autopsy is preferred so that percutaneous needle puncturing is not necessary. However, if autopsy will not be conducted or is delayed, please proceed with sampling.

Blood samples should be taken by sterile syringe and deposited directly into evacuated tube, if possible, to avoid contamination of sample or dissipation of volatiles (ethyl alcohol).

NOTE: If only cavity fluid is available, please open cavity to collect sample. Note condition of cavity.

Please use smallest tubes available to accommodate available quantity of fluid sample (with 1% sodium fluoride).

Sample identification, sealing:

As each sample is collected, seal each blood tube and each urine bottle using the respective blood tube or urine bottle using the identifier labels from the set provided with the Post Accident Testing Blood/Urine Custody and Control Form (FRA Form 6180.74 (revised)). Make sure the unique identification number on the labels match the pre-printed number on the Control Form. Please label other samples with name and sample set identification numbers. You can use labels and seals from any of the extra forms, but annotate them accordingly.

Annotate each label with sample description and source (as appropriate) (e.g., blood, femoral vein).

Please provide copy of any written documentation regarding condition of body and/or sampling procedure that is available at the time samples are shipped.

Handling:

If samples cannot be shipped immediately as provided below, samples other than blood may be immediately frozen. Blood samples should be refrigerated, but not frozen.

All samples and documentation should be secured from unauthorized access pending delivery for transportation.

Information:

If the railroad has not already done so, please place the name of the subject at the top of the Control Form (STEP 1). You are requested to complete STEP 2 of the form, annotating it by writing the word ''FATALITY,'' listing the samples provided, providing any further information under ''Remarks'' or at the bottom of the form. If it is necessary to transfer custody of the samples from the person taking the samples prior to preparing

the box for shipment, please use the blocks provided in STEP 5 to document transfer of custody.

The railroad representative will also provide Accident Information Required for Post-Accident Toxicological Testing, FRA Form 6180.73 (revised). Both forms should be placed in the shipping box when completed; but you may retain the designated medical facility copy of each form for your records.

Packing the shipping box:

Place urine bottles and blood tubes in the sponge liner in the individual kit, close the biohazard bag zipper, close the kit and apply the kit custody seal to the kit. You may use additional kits for each tissue sample, being careful to identify sample by tissue, name of deceased, and specimen set identification number. Apply kit security seals to individual kits and initial across all seals.

Place all forms in the zip-lock bag and seal securely. Place the bag in the shipping box. Do not put forms in with the specimens.

Seal the shipping box with the seal provided and initial and date across the seal.

Affix the mailing label to the outside of the box.

Shipping the box:

The railroad must arrange to have the box shipped overnight air express or (if express service is unavailable) by air freight, prepaid, to FRA's designated laboratory. When possible, but without incurring delay, deliver the sealed shipping box directly to the express courier or the air freight representative.

If courier pickup is not immediately available at your facility, the railroad is required to transport the sealed shipping box to the nearest point of shipment via air express, air freight or equivalent means.

If the railroad receives the sealed shipping box to arrange shipment, please record under ''Supplemental Information'' on the Control Form, the name of the railroad official taking custody.

Other:

FRA requests that the person taking the samples annotate the Control Form under ''Supplemental Information'' if additional toxicological analysis will be undertaken with respect to the fatality. FRA reports are available to the coroner or medical examiner on request.

[60 FR 19539, Apr. 19, 1995]

APPENDIX D - DRUG TESTING MANAGEMENT INFORMATION SYSTEM (MIS) DATA COLLECTION FORM

INSTRUCTIONS

The following instructions are to be used as a guide for completing the Federal Railroad Administration (FRA) **Drug Testing MIS Data Collection Form**. These instructions outline and explain the information requested and indicate the probable sources for this information. A sample testing results table with a narrative explanation is provided on pages iv-v as an example to facilitate the process of completing the form correctly.

This reporting form includes five sections. Collectively, these sections address the data elements required in the FRA and the U.S. Department of Transportation (DOT) drug testing regulations. The five sections, the page number for the instructions, and the page location on the reporting form are:

Section	Instructions Page	Reporting Form Page
A. RAILROAD EMPLOYER INFORMATION	i	1
B. COVERED EMPLOYEES	i	2
C. DRUG TESTING INFORMATION	ii-vi	3-5
D. OTHER DRUG TESTING/PROGRAM INFORMATION	vi	6
E. DRUG TRAINING/EDUCATION	vi	6

Page 1 **RAILROAD EMPLOYER INFORMATION** (Section A) requires the company name for which the report is done and a current address. Below this, a signature, date, and current telephone (including the area code) are required certifying the correctness and completeness of the form.

Page 2 **COVERED EMPLOYEES** (Section B) requires a count for each Hours of Service Act employee category that must be tested under FRA regulations. The categories are: "Engine Service", "Train Service", "Dispatcher/Operator", "Signal Service", and "Other." The **OTHER** category is a count of employees performing covered service that are not included in specific preceding categories. Examples include yardmasters, hostlers (non-engineer craft), bridge tenders, switch tenders, etc. These counts should be based on the company records as of January 1 of the reported year. The **TOTAL** is a count of **all** covered employees for **all** categories combined, i.e., the sum of the column.

Additional information must be completed if your company employs personnel who perform duties covered by the anti-drug rules of more than one DOT operating administration. **NUMBER OF EMPLOYEES COVERED BY MORE THAN**

ONE DOT OPERATING ADMINISTRATION, requires that you identify the number of employees in each employee category under the appropriate additional operating administration(s).

Section C is used to summarize drug testing results for applicants and drug and alcohol testing results for covered employees. There are seven categories of testing to be completed. The first part of the table is where you enter the data on pre-employment/covered service transfer testing. The remaining six parts are for entering drug testing data on random testing, post-positive return to service testing, follow-up testing, for cause drug testing (one part each for "for cause testing" due to accidents/injuries, rules violations, and reasonable suspicion), and for cause alcohol testing (one part each for breath tests due to railroad rules, urine tests due to railroad rules, and breath tests mandated by the FRA), respectively. Items necessary to complete the drug testing tables include:

1) the number of specimens collected in each employee category;
2) the number of specimens tested which were verified negative and verified positive for any drug(s); and
3) individual counts of those specimens which were verified positive for each of the five drugs.

Do not include results of quality control (QC) samples submitted to the testing laboratory in any of the tables.

A sample table with detailed instructions is provided for the first part **PRE-EMPLOYMENT/COVERED SERVICE TRANSFER TESTING**. The format and explanations used for the sample apply to all seven parts of the table in Section C.

Information on actions taken with those persons testing positive is required at the end of page 3. Specific instructions for providing this latter information are given after the instructions for completing the tables in Section C.

Page 3

DRUG TESTING INFORMATION (Section C) requires information for drug testing by category of testing. All numbers entered into the pre-employment/covered service transfer section of the table should be separated into the category of employment for which the person was applying/transferring. The other categories are for employee testing and require information for company employees in **covered positions** only. Each part of this table must be completed for each category of testing. These categories include: (1) random testing, (2) post-positive return to service testing, (3) follow-up testing, (4) for cause testing due to accidents/injuries, (5) for cause testing due to rule violations, and (6) for cause testing due to reasonable suspicion. These numbers **do not** include refusals for testing. A sample section of the table with example numbers is presented on page v.

Three types of information are necessary to complete the left side of this table. The first blank column with the heading "**NUMBER OF SPECIMENS COLLECTED**," requires a count for all collected specimens by employee category. It should not include refusals to test. The second blank column with the heading "**NUMBER OF SPECIMENS VERIFIED NEGATIVE**," requires a count for all completed tests by employee category that were verified negative by your Medical Review Officer (MRO).

The third blank column with the heading "**NUMBER OF SPECIMENS VERIFIED POSITIVE FOR ONE OR MORE OF THE FIVE DRUGS,**" refers to the number of specimens provided by job applicants or employees that were verified positive. "Verified positive" means the results were verified by your MRO.

The right hand portion of this table, with the heading "**NUMBER OF SPECIMENS VERIFIED POSITIVE FOR EACH TYPE OF DRUG,**" requires counts of positive tests **for each** of the five drugs for which tests were done, i.e., marijuana (THC), cocaine, phencyclidine (PCP), opiates, and amphetamines. The number of specimens positive for each drug should be entered in the appropriate column for that drug type. Again, "verified positive" refers to test results verified by your MRO.

If an applicant or employee tested positive for more than one drug; for example, both marijuana and cocaine, that person's positive results would be included once in each of the appropriate columns (marijuana and cocaine).

Each column in the table should be added and the answer entered in the row marked "**TOTAL**".

A sample table is provided on page v with example numbers.

Page 3 Below the part of the table containing pre-employment/covered service transfer testing information is a box with the heading "**Number of applicants/transfers denied employment/transfer in a covered position following a verified positive drug test**". This is simply a count of those persons who were not hired/transferred into a covered position because they tested positive for one or more drugs.

Page 3 Below the part of the table containing post-positive return to service testing information, you must record the **number of employees returned to duty during this reporting period after having failed or refused a drug test required under the FRA rule**. This information should be available from the personnel office and/or drug program manager.

Page 4 **FOR CAUSE TESTING** data are provided in three separate parts of the table -- one for accidents/injuries, one for rules violations, and one for reasonable suspicion. In the shaded portion of the parts for accidents/injuries and rules violations you must indicate whether the testing was conducted under FRA authority or under railroad authority.

The sections of the table for accidents/injuries and rules violations contain two additional columns which must be completed for testing done under railroad authority. The first additional column, labeled "Other Prohibited," requires that you list any drugs, other than the five listed, that are tested under railroad rule (e.g., butalbital). The rightmost column, labeled "Combined," requires that you indicate whether any of these positives were in combination with one or more positive findings for the five drugs (same specimen). If yes, you must attach details (e.g., 2 marijuana/butalbital).

SAMPLE APPLICANT TEST RESULTS TABLE

The following example is for Section C, **DRUG TESTING INFORMATION**, which summarizes pre-employment/covered service transfer testing results. The procedures detailed here also apply to the other categories of testing in Section C which require you to summarize testing results for employees. This example uses the categories "Engine Service" and "Train Service" to illustrate the procedures for completing the form.

A — Urine specimens were collected for 157 job applicants for engine service positions during the reporting year. This information is entered in the first blank column of the table in the row marked "Engine Service".

B — The Medical Review Officer (MRO) for your company reported that 153 of those 157 specimens from applicants for engine service positions were negative (i.e., no drugs were detected). Enter this information in the second blank column of the table in the row marked "Engine Service".

C — The MRO for your company reported that 4 of those 157 specimens from applicants for engine service positions were positive (i.e., a drug or drugs were detected). Enter this information in the third blank column of the table in the row marked "Engine Service".

D — With the 4 specimens that tested positive, the following drugs were detected:

Specimen	Drugs
#1	Marijuana
#2	Amphetamines
#3	Marijuana and Cocaine (Multi-drug specimen)
#4	Marijuana

Marijuana was detected in three (3) specimens, cocaine in one (1), and amphetamines in one (1). This information is entered in the columns on the right hand side of the table under each of these drugs. Two different drugs were detected in specimen #3 (multi-drug) so an entry is made in both the marijuana and the cocaine column for this specimen. Information on multi-drug specimens must also be entered in Section D, **OTHER DRUG TESTING/PROGRAM INFORMATION**, on page 6 of the reporting form.

Please note that the sample data collection form also has information for train service on line two. The same procedures outlined for engine service should be followed for entering the data on train service. With applicants for train service positions, 107 specimens were collected resulting in 105 verified negatives and 2 verified positives -- 1 for marijuana and 1 for opiates. This information is entered in the row marked "Train Service".

E — The last row, marked "TOTAL", requires you to add the numbers in each of the columns. With this example, 157 specimens from applicants for engine service positions were collected and 107 for applicants for train service positions. The total for that column would be 264 (i.e., 157+107). The same procedure should

be used for each column, i.e., add all the numbers in that column and place the answer in the last row.

PRE-EMPLOYMENT/"COVERED SERVICE" TRANSFER TESTING								
EMPLOYEE CATEGORY	NUMBER OF SPECIMENS COLLECTED	NUMBER OF SPECIMENS VERIFIED NEGATIVE	NUMBER OF SPECIMENS VERIFIED POSITIVE FOR ONE OR MORE OF THE FIVE DRUGS	NUMBER OF SPECIMENS VERIFIED POSITIVE FOR EACH TYPE OF DRUG				
				Marijuana (THC)	Cocaine	Phencyclidine (PCP)	Opiates	Amphetamines
Engine Service	157	153	4	3	1	0	0	1
Train Service	107	105	2	1	0	0	1	0
TOTAL	264	258	6	4	1	0	1	1

A B C D E

Note that adding up the numbers for each type of drug in a row ("NUMBER OF SPECIMENS VERIFIED POSITIVE FOR EACH TYPE OF DRUG") will not always match the number entered in the third column, "NUMBER OF SPECIMENS VERIFIED POSITIVE FOR ONE OR MORE OF THE FIVE DRUGS". The total for the numbers on the right hand side of the table may differ from the number of specimens testing positive since some specimens may contain more than one drug.

Remember that the same procedures indicated above are to be used for completing all of the categories for testing in Section C.

Page 5 **FOR CAUSE BREATH ALCOHOL TESTS DONE UNDER RAILROAD RULE/POLICY** requires information concerning breath alcohol tests conducted on covered employees for specific cause under the authority of the railroad's rules or collective bargaining agreements (i.e., NOT in reliance on Subpart D of CFR Part 219).

FOR CAUSE URINE ALCOHOL TESTS UNDER RAILROAD RULE/POLICY requires information concerning urine alcohol tests conducted on covered employees for specific cause under the authority of the railroad's rules or collective bargaining agreements (i.e., NOT in reliance on Subpart D of 49 CFR Part 219).

"FRA" FOR CAUSE BREATH ALCOHOL TESTS requires information concerning breath alcohol tests conducted on covered employees for cause, under Subpart D of 49 CFR Part 219.

Page 6 There are three items required under **OPERATIONAL TESTS AND INSPECTIONS** concerning the railroad's program for supervising its employees and ensuring they are free from impairments caused by drugs or alcohol.

Page 6 **OTHER DRUG TESTING/PROGRAM INFORMATION** (Section D) requires that you complete a table dealing with specimens positive for more than one drug and a table dealing with employees who refused to submit to a drug test.

Page 6 **SPECIMENS VERIFIED POSITIVE FOR MORE THAN ONE DRUG** requires information on specimens that contained more than one drug. Indicate the **EMPLOYEE CATEGORY** and the **NUMBER OF VERIFIED POSITIVES**. Then specify the combination of drugs reported as positive by placing the number in the appropriate columns. For example, if marijuana and cocaine were detected in 3 engine service specimens, then you would write "Engine Service" as the employee category, "3" as the number of verified positives, and "3" in the columns for "Marijuana" and "Cocaine". If marijuana and opiates were detected in 2 engine service specimens, then you would write "Engine Service" as the employee category, "2" as the number of verified positives, and "2" in the columns for "Marijuana" and "Opiates".

Page 6 **EMPLOYEES WHO REFUSED TO SUBMIT TO A DRUG TEST** requires a count of the **NUMBER OF COVERED EMPLOYEES** who refused to submit to a **random** or **non-random** (pre-employment, for cause, post-positive return to service, or follow-up) drug test required under the FRA regulation.

Page 6 **DRUG TRAINING/EDUCATION** (Section E) requires information on the number of supervisory personnel who have received the required drug training during the current reporting period.

FRA DRUG TESTING MIS DATA COLLECTION FORM OMB No. 2130-0526

YEAR COVERED BY THIS REPORT: 19___

A. RAILROAD EMPLOYER INFORMATION

Company _____

Address _____

_____

_____

I, the undersigned, certify the information provided on the attached Federal Railroad Administration Drug Testing Management Information System Data Collection Form is, to the best of my knowledge and belief, true, correct, and complete for the period stated.

_____
Signature

_____
Title

_____
Date of Signature

_____
Phone Number

Title 18, U.S.C. Section 1001, makes it a criminal offense subject to a maximum fine of $10,000, or imprisonment for not more than 5 years, or both, to knowingly and willfully make or cause to be made any false or fraudulent statements or representations in any matter within the jurisdiction of any agency of the United States. The willful falsification of any information in this report may also subject the submitter to civil or criminal prosecution under Title 45, U.S.C. Section 438(e).

The Federal Railroad Administration estimates that the average burden for this report form is 65 hours. You may submit any comments concerning the accuracy of this burden estimate or any suggestions for reducing the burden to: Office of Safety; Federal Railroad Administration; 400 7th St., S.W.; Washington, D.C. 20590; OR Office of Management and Budget, Paperwork Reduction Project (2130-0526); Washington, D.C. 20503.

FRA Form No. FRAF6180.94A 1

B. COVERED EMPLOYEES

COVERED EMPLOYEES						
EMPLOYEE CATEGORY	NUMBER OF FRA COVERED EMPLOYEES	NUMBER OF EMPLOYEES COVERED BY MORE THAN ONE DOT OPERATING ADMINISTRATION				
		FAA	FHWA	FTA	RSPA	USCG
Engine Service						
Train Service						
Dispatcher/Operator						
Signal Service						
Other*						
TOTAL						

* Includes yardmasters, hostlers (non-engineer craft), bridge tenders, switch tenders, and other miscellaneous employees performing covered service as defined in 49 CFR 228.5 (c).

READ BEFORE COMPLETING THE REMAINDER OF THIS FORM:

1. All items refer to the **current** reporting period **only** (for example, January 1, 1994 - December 31, 1994).

2. This report is only for testing **REQUIRED BY THE FEDERAL RAILROAD ADMINISTRATION (FRA) AND THE U.S. DEPARTMENT OF TRANSPORTATION (DOT)**:

- Results should be reported only for employees in **COVERED POSITIONS** as defined by the FRA drug testing regulations.

- The information requested should only include testing for marijuana (THC), cocaine, phencyclidine (PCP), opiates, and amphetamines using the standard procedures required by DOT regulation 49 CFR Part 40.

3. Information on refusals for testing should only be reported in Section D ["OTHER DRUG TESTING/PROGRAM INFORMATION"]. Do not include refusals for testing in other sections of this report.

4. Do not include the results of any quality control (QC) samples submitted to the testing laboratory in any of the tables.

5. Complete all items; DO NOT LEAVE ANY ITEM BLANK. If the value for an item is zero (0), place a zero (0) on the form.

This part of the form requires information on VERIFIED POSITIVE and VERIFIED NEGATIVE drug tests. These are the results that are reported to you by your Medical Review Officer (MRO).

C. DRUG TESTING INFORMATION

EMPLOYEE CATEGORY	NUMBER OF SPECIMENS COLLECTED	NUMBER OF SPECIMENS VERIFIED NEGATIVE	NUMBER OF SPECIMENS VERIFIED POSITIVE FOR ONE OR MORE OF THE FIVE DRUGS	NUMBER OF SPECIMENS VERIFIED POSITIVE FOR EACH TYPE OF DRUG				
				Mari-juana (THC)	Cocaine	Phency-clidine (PCP)	Opiates	Amphet-amines
PRE-EMPLOYMENT/COVERED SERVICE TRANSFER								
Engine Service								
Train Service								
Dispatcher/Operator								
Signal Service								
Other								
Total								
RANDOM								
Engine Service								
Train Service								
Dispatcher/Operator								
Signal Service								
Other								
Total								
POST-POSITIVE RETURN TO SERVICE								
Engine Service								
Train Service								
Dispatcher/Operator								
Signal Service								
Other								
Total								
FOLLOW-UP								
Engine Service								
Train Service								
Dispatcher/Operator								
Signal Service								
Other								
Total								

Number of applicants/transfers denied employment/transfer in a covered position following a verified positive drug test:	

Number of employees returned to duty during this reporting period after having failed or refused a drug test required under the FRA rule:	

FRA Form No. FRAF6180.94A 3

C. DRUG TESTING INFORMATION (continued)

EMPLOYEE CATEGORY	NUMBER OF SPECIMENS COLLECTED	NUMBER OF SPECIMENS VERIFIED NEGATIVE	NUMBER OF SPECIMENS VERIFIED POSITIVE FOR ONE OR MORE OF THE FIVE DRUGS	NUMBER OF SPECIMENS VERIFIED POSITIVE FOR EACH TYPE OF DRUG						
				Mari-juana (THC)	Cocaine	Phency-clidine (PCP)	Opiates	Amphet amines	Other Prohibited [1]	Combined [2]
FOR CAUSE DRUG TESTING DUE TO ACCIDENT*/INJURY *(Accidents NOT qualifying under 49 CFR Part 219 Subpart C) (Testing Conducted Under: FRA Rule___ Railroad Rule___)										
Engine Service										
Train Service										
Dispatcher/ Operator										
Signal Service										
Other										
TOTAL										
DUE TO RULES VIOLATION (Testing Conducted Under: FRA Rule___ Railroad Rule___)										
Engine Service										
Train Service										
Dispatcher/ Operator										
Signal Service										
Other										
TOTAL										
REASONABLE SUSPICION (Testing Conducted Under: FRA Rule___ Railroad Rule___)										
Engine Service										
Train Service										
Dispatcher/ Operator										
Signal Service										
Other										
TOTAL										

[1] Other drugs tested under railroad rule where the use was prohibited by 49 CFR 219.102.

[2] Indicate whether any of these positives were in combination with one or more positive findings for the five drugs (same specimen). If yes, attach details (e.g., 2 marijuana/butalbital).

FRA Form No. FRAF6180.94A 4

C. DRUG TESTING INFORMATION (continued)

FOR CAUSE ALCOHOL TESTING

TYPE OF TEST	NUMBER CONDUCTED	NUMBER POSITIVE (= or > .02%)	NUMBER OF REFUSALS
"FOR CAUSE" BREATH ALCOHOL TESTS UNDER RAILROAD RULE/POLICY The following items request information concerning breath alcohol tests conducted on covered employees for specific cause under the authority of the railroad's rule or collective bargaining agreements (i.e. NOT in reliance on Subpart D or CFR Part 219).			
1. Following ACCIDENTS/INCIDENTS:			
2. Following RULE VIOLATIONS:			
3. REASONABLE SUSPICION of current use or impairment:			
"FOR CAUSE" URINE ALCOHOL TESTS UNDER RAILROAD RULE/POLICY The following items request information concerning urine alcohol tests conducted on covered employees for specific cause under the authority of the railroad's rule or collective bargaining agreements (i.e. NOT in reliance on Subpart D or CFR Part 219).			
1. Following ACCIDENTS/INCIDENTS:			
2. Following RULE VIOLATIONS:			
3. REASONABLE SUSPICION of current use or impairment:			
"FRA" FOR CAUSE BREATH ALCOHOL TESTS The following items request information concerning breath alcohol tests conducted on covered employees for cause, under Subpart D of 49 CFR Part 219			
1. Following ACCIDENTS/INCIDENTS:			
2. Following RULE VIOLATIONS:			
3. REASONABLE SUSPICION of current use or impairment:			

OPERATIONAL TESTS AND INSPECTIONS

The following items request information concerning the railroad's program for supervising its employees and ensuring that they are free from impairments caused by drugs or alcohol:

Total number of covered employees observed in documented tests and inspections related to enforcement of the railroad's rules and policies on drug and alcohol use (including, but not limited to, observations for which urine tests were conducted and observations after accidents/incidents and rule violations):	
Number of covered employees charged with a violation of the railroad's Rule G or similar rule or policy on drugs:	
Number of covered employees charged with a violation of the railroad's Rule G or similar rule or policy on alcohol:	

D. OTHER DRUG TESTING/PROGRAM INFORMATION

SPECIMENS VERIFIED POSITIVE FOR MORE THAN ONE DRUG						
EMPLOYEE CATEGORY	NUMBER OF VERIFIED POSITIVES	Marijuana (THC)	Cocaine	Phency-clidine (PCP)	Opiates	Amphet-amines

EMPLOYEES WHO REFUSED TO SUBMIT TO A DRUG TEST	Number
Covered employees who refused to submit to a **random** drug test required under the FRA regulation:	
Covered employees who refused to submit to a **non-random** drug test required under the FRA regulation:	

E. DRUG TRAINING/EDUCATION

TRAINING DURING CURRENT REPORTING PERIOD	Number
Supervisory personnel who have received initial training on the specific contemporaneous physical, behavioral, and performance indicators of probable drug use as required by FRA drug testing regulations:	

FRA Form No. FRAF6180.94A 6

[58 FR 68237, Dec. 23, 1993]

APPENDIX D1 TO PART 219—[RESERVED]

APPENDIX D 2 - DRUG TESTING MANAGEMENT INFORMATION SYSTEM (MIS) "EZ" DATA COLLECTION FORM

INSTRUCTIONS

The following instructions are to be used as a guide for completing the Federal Railroad Administration (FRA) **Drug Testing MIS "EZ" Data Collection Form**. This form should only be used if there are **no positive tests** to be reported by your company. These instructions outline and explain the information requested and indicate the probable sources for this information. This reporting form includes three sections. These sections address the data elements required in the FRA and the U.S. Department of Transportation (DOT) drug testing regulations.

SECTION A - RAILROAD EMPLOYER INFORMATION requires the company name for which the report is done and a current address. Below this, a signature, date, and current telephone (including the area code) are required certifying the correctness and completeness of the form.

SECTION B - COVERED EMPLOYEES requires a count for each Hours of Service Act employee category that must be tested under FRA regulations. The categories are: "Engine Service", "Train Service", "Dispatcher/Operator", "Signal Service", and "Other." The **OTHER** category is a count of employees performing covered service that are not included in specific preceding categories. Examples include yardmasters, hostlers (non-engineer craft), bridge tenders, switch tenders, etc. These counts should be based on the company records for the reported year. The **TOTAL** is a count of **all** covered employees for **all** categories combined, i.e., the sum of the column.

Additional information must be completed if your company employs personnel who perform duties covered by the drug rules of more than one DOT operating administration. **NUMBER OF EMPLOYEES COVERED BY MORE THAN ONE DOT OPERATING ADMINISTRATION**, requires that you identify the number of employees in each employee category under the appropriate additional operating administration(s).

SECTION C - DRUG TESTING INFORMATION requires information for drug testing and training. The first table requests information on the **NUMBER OF SPECIMENS COLLECTED AND VERIFIED NEGATIVE** in each category for testing. All numbers entered into the pre-employment/covered service transfer section of the table should be separated into the category of employment for which the person was applying/transferring. The other categories are for employee testing and require information for company employees in **covered positions** only. Each part of this table must be completed for each category of testing. These categories include: (1) random testing, (2) for cause testing due to accidents/injuries, (3) for cause testing due to rule violations, (4) for cause testing due to reasonable suspicion, (5) post-positive return to service testing, and (6) follow-up testing. For the three types of for-cause testing, indicate whether testing was conducted under FRA or railroad rule. These numbers **do not** include refusals for testing. "**COLL**" requires the number of specimens collected in each employee category for each category of testing. "**NEG**" requires a count for all completed tests by employee category that were verified negative by your Medical Review Officer (MRO). Do not include results of quality control (QC) samples submitted to the testing laboratory in any of the categories. Each column in the table should be added and the answer entered in the row marked "**TOTAL**".

Following the table that summarizes **DRUG TESTING INFORMATION**, you must provide a count of the **number of employees returned to duty during this reporting period after having failed or refused a drug test required under the FRA rule**. This information should be available from the personnel office and/or drug program manager.

FOR CAUSE ALCOHOL TESTING requires information concerning breath and urine alcohol tests conducted under railroad rules and FRA rules as specified.

FOR CAUSE BREATH ALCOHOL TESTS DONE UNDER RAILROAD RULE/POLICY requires information concerning breath alcohol tests conducted on covered employees for specific cause under the authority of the railroad's rules or collective bargaining agreements (i.e., NOT in reliance on Subpart D of CFR Part 219).

FOR CAUSE URINE ALCOHOL TESTS UNDER RAILROAD RULE/POLICY requires information concerning urine alcohol tests conducted on covered employees for specific cause under the authority of the railroad's rules or collective bargaining agreements (i.e., NOT in reliance on Subpart D of 49 CFR Part 219).

"FRA" FOR CAUSE BREATH ALCOHOL TESTS requires information concerning breath alcohol tests conducted on covered employees for cause, under Subpart D of 49 CFR Part 219.

There are three items required under **OPERATIONAL TESTS AND INSPECTIONS** concerning the railroad's program for supervising its employees and ensuring they are free from impairments caused by alcohol or drugs.

EMPLOYEES WHO REFUSED TO SUBMIT TO A DRUG TEST requires a count of the **NUMBER OF COVERED EMPLOYEES** who refused to submit to a **random** or **non-random** (pre-employment, for cause, post-positive return to service, or follow-up) drug test required under the FRA regulation.

DRUG TRAINING/EDUCATION DURING CURRENT REPORTING PERIOD requires information on the number of supervisory personnel who have received the required drug training during the current reporting period.

FRA DRUG TESTING MIS EZ DATA COLLECTION FORM OMB No. 2130-0526

YEAR COVERED BY THIS REPORT: 19___

A. RAILROAD EMPLOYER INFORMATION

Company _____

Address _____

_____

_____

I, the undersigned, certify that the information provided on the attached Federal Railroad Administration Drug Testing Management Information System Data Collection Form is, to the best of my knowledge and belief, true, correct, and complete for the period stated.

_____
Signature

_____
Title

_____
Date of Signature

_____
Phone Number

Title 18, U.S.C. Section 1001, makes it a criminal offense subject to a maximum fine of $10,000, or imprisonment for not more than 5 years, or both, to knowingly and willfully make or cause to be made any false or fraudulent statements or representations in any matter within the jurisdiction of any agency of the United States. The willful falsification of any information in this report may also subject the submitter to civil or criminal prosecution under Title 45, U.S.C. Section 438(e).

The Federal Railroad Administration estimates that the average burden for this report form is 25 hours. You may submit any comments concerning the accuracy of this burden estimate or any suggestions for reducing the burden to: Office of Safety; Federal Railroad Administration; 400 7th St., S.W.; Washington, D.C. 20590; OR Office of Management and Budget, Paperwork Reduction Project (2130-0526); Washington, D.C. 20503.

FRA Form No. FRAF6180.94B 1

B. COVERED EMPLOYEES

COVERED EMPLOYEES						
EMPLOYEE CATEGORY	NUMBER OF FRA COVERED EMPLOYEES	NUMBER OF EMPLOYEES COVERED BY MORE THAN ONE DOT OPERATING ADMINISTRATION				
		FAA	FHWA	FTA	RSPA	USCG
Engine Service						
Train Service						
Dispatcher/Operator						
Signal Service						
Other*						
TOTAL						

* Includes yardmasters, hostlers (non-engineer craft), bridge tenders, switch tenders, and other miscellaneous employees performing covered service as defined in 49 CFR 228.5 (c).

C. DRUG TESTING INFORMATION

NUMBER OF SPECIMENS COLLECTED AND VERIFIED NEGATIVE														
EMPLOYEE CATEGORY	PRE-EMPLOYMENT /COVERED SERVICE TRANSFER		RANDOM		FOR CAUSE Accident/Injury Testing Conducted Under Rule: FRA __ Railroad __		FOR CAUSE Rules Violation Testing Conducted Under Rule: FRA __ Railroad __		REASONABLE SUSPICION Testing Conducted Under Rule: FRA __ Railroad __		POST-POSITIVE RETURN TO SERVICE		FOLLOW-UP	
	COLL	NEG	COLL	NEG	COLL	NEG	COLL	NEG	COLL	NEG	COLL	NEG	COLL	NEG
Engine Service														
Train Service														
Dispatcher/Operator														
Signal Service														
Other														
Total														

Number of employees returned to duty during this reporting period after having failed or refused a drug test required under the FRA rule:	

FRA Form No. FRAF6180.94B 2

C. DRUG TESTING INFORMATION (continued)

FOR CAUSE ALCOHOL TESTING

TYPE OF TEST	NUMBER CONDUCTED
"FOR CAUSE" BREATH ALCOHOL TESTS UNDER RAILROAD RULE/POLICY The following items request information concerning breath alcohol tests conducted on covered employees for specific cause under the authority of the railroad's rule or collective bargaining agreements (i.e. NOT in reliance on Subpart D or CFR Part 219).	
1. Following ACCIDENTS/INCIDENTS:	
2. Following RULE VIOLATIONS:	
3. REASONABLE SUSPICION of current use or impairment:	
"FOR CAUSE" URINE ALCOHOL TESTS UNDER RAILROAD RULE/POLICY The following items request information concerning urine alcohol tests conducted on covered employees for specific cause under the authority of the railroad's rule or collective bargaining agreements (i.e. NOT in reliance on Subpart D or CFR Part 219).	
1. Following ACCIDENTS/INCIDENTS:	
2. Following RULE VIOLATIONS:	
3. REASONABLE SUSPICION of current use or impairment:	
"FRA" FOR CAUSE BREATH ALCOHOL TESTS The following items request information concerning breath alcohol tests conducted on covered employees for cause, under Subpart D of 49 CFR Part 219	
1. Following ACCIDENTS/INCIDENTS:	
2. Following RULE VIOLATIONS:	
3. REASONABLE SUSPICION of current use or impairment:	

OPERATIONAL TESTS AND INSPECTIONS

The following items request information concerning the railroad's program for supervising its employees and ensuring that they are free from impairments caused by drugs or alcohol:

Total number of covered employees observed in documented tests and inspections related to enforcement of the railroad's rules and policies on drug and alcohol use (including, but not limited to, observations for which urine tests were conducted and observations after accidents/incidents and rule violations):	
Number of covered employees charged with a violation of the railroad's Rule G or similar rule or policy on drugs:	
Number of covered employees charged with a violation of the railroad's Rule G or similar rule or policy on alcohol:	

EMPLOYEES WHO REFUSED TO SUBMIT TO A DRUG TEST	Number
Covered employees who refused to submit to a **random** drug test required under the FRA regulation:	
Covered employees who refused to submit to a **non-random** drug test required under the FRA regulation:	

DRUG TRAINING/EDUCATION DURING CURRENT REPORTING PERIOD	Number
Supervisory personnel who have received initial training on the specific contemporaneous physical, behavioral, and performance indicators of probable drug use as required by FRA drug testing regulations:	

FRA Form No. FRAF6180.94B 3

[58 FR 68250, Dec. 23, 1993]

APPENDIX D 3 - ALCOHOL TESTING MANAGEMENT INFORMATION SYSTEM (MIS) DATA COLLECTION FORM

INSTRUCTIONS

The following instructions are to be used as a guide for completing the Federal Railroad Administration (FRA) **Alcohol Testing MIS Data Collection Form**. These instructions outline and explain the information requested and indicate the probable sources for this information. A sample testing results table with a narrative explanation is provided on pages iii-iv as an example to facilitate the process of completing the form correctly.

This reporting form includes five sections. Collectively, these sections address the data elements required in the FRA and the U.S. Department of Transportation (DOT) alcohol testing regulations. The five sections, the page number for the instructions, and the page location on the reporting form are:

Section	Instructions Page	Reporting Form Page
A. RAILROAD EMPLOYER INFORMATION	i	1
B. COVERED EMPLOYEES	i	2
C. ALCOHOL TESTING INFORMATION	ii-iv	3-4
D. OTHER ALCOHOL TESTING/PROGRAM INFORMATION	iv	5
E. ALCOHOL TRAINING/EDUCATION	iv	5

Page 1 **RAILROAD EMPLOYER INFORMATION** (Section A) requires the company name for which the report is done and a current address. Below this, a signature, date, and current telephone (including the area code) are required certifying the correctness and completeness of the form.

Page 2 **COVERED EMPLOYEES** (Section B) requires a count for each Hours of Service Act employee category that must be tested under FRA regulations. The categories are: "Engine Service", "Train Service", "Dispatcher/Operator", "Signal Service", and "Other." The **OTHER** category is a count of employees performing covered service that are not included in specific preceding categories. Examples include yardmasters, hostlers (non-engineer craft), bridge tenders, switch tenders, etc. These counts should be based on the company records as of January 1 of the reported year. The **TOTAL** is a count of **all** covered employees for **all** categories combined, i.e., the sum of the column.

Additional information must be completed if your company employs personnel who perform duties covered by the alcohol rules of more than one DOT operating administration. **NUMBER OF EMPLOYEES COVERED BY MORE THAN ONE DOT OPERATING ADMINISTRATION**, requires that you identify the number of employees in each employee category under the appropriate additional operating administration(s).

Page 3 **ALCOHOL TESTING INFORMATION** (Section C) requires information for alcohol testing by category of testing. All numbers entered into the pre-employment (and transfer to covered service) section of the table should be separated into the category of employment for which the person was applying or transferring. The other categories are for employee testing and require information for company employees in **covered positions** only. Each part of this table must be completed for each category of testing. These categories include: (1) random testing, (2) return to duty testing, (3) follow-up testing, (4) for cause testing due to accidents/injuries, (5) for cause testing due to rule violations, and (6) reasonable suspicion testing. These numbers **do not** include refusals for testing. A sample section of the table with example numbers is presented on page iv.

Four types of information are necessary to complete this table. The first blank column with the heading **"NUMBER OF SCREENING TESTS"** requires a count of all screening alcohol tests performed for each employee category. It should not include refusals to test. The second blank column with the heading **"NUMBER OF CONFIRMATION TESTS"** requires a count of all confirmation alcohol tests performed for each employee category.

The third blank column with the heading **"NUMBER OF CONFIRMATION TEST RESULTS EQUAL TO OR GREATER THAN 0.02, BUT LESS THAN 0.04"** requires a count for each employee category.

The fourth blank column with the heading **"NUMBER OF CONFIRMATION TEST RESULTS EQUAL TO OR GREATER THAN 0.04"** requires a count for each employee category. **Note: For return to duty testing, a confirmation result equal to or greater than 0.02 is a violation of the alcohol rule. Therefore, if the number of results equal to or greater than 0.04 is unknown, you may report all results in the third column of the table.**

Each column in the table should be added and the answer entered in the row marked **"TOTAL"**.

A sample table is provided on page iv with example numbers.

Page 3 At the bottom of the page containing pre-employment testing information is a box with the heading **"Number of applicants/transfers denied employment/transfer following an alcohol test indicating an alcohol concentration of 0.04 or greater"**. Enter the appropriate number in the box provided.

Page 3 Next, you must provide a count of the **"Number of employees who engaged in alcohol misuse who were returned to duty in a covered position (having complied with the recommendations of a substance abuse professional as described in FRA regulations)"**. This information should be available from the personnel office and/or the drug and alcohol program manager.

Page 4 **FOR CAUSE TESTING** data are provided in three separate parts of the table -- one for accidents/injuries, one for rules violations, and one for reasonable suspicion. In the top portion of the parts for accidents/injuries and rules violations you must indicate whether the testing was conducted under FRA authority or under railroad authority.

SAMPLE APPLICANT TEST RESULTS TABLE

The following example is for Section C, **ALCOHOL TESTING INFORMATION**, which summarizes pre-employment testing results. The procedures detailed here also apply to the other categories for testing in Section C which require you to summarize testing results for employees. This example will use the categories "Engine Service" and "Train Service" to illustrate the procedures for completing the form.

A — Screening tests were performed on 157 job applicants for engine service positions during the reporting year. This information is entered in the first blank column of the table in the row marked "Engine Service".

B — Confirmation tests were necessary for 6 of the 157 applicants for engine service positions. Enter this information in the second blank column of the table in the row marked "Engine Service". The confirmation test results for these 6 applicants were the following:

Applicant	Confirmation Result
#1	0.06
#2	0.01
#3	0.11
#4	0.04
#5	0.03
#6	0.02

C — The confirmation test results for 2 of the applicants for engine service positions were equal to or greater than 0.02, but less than 0.04. Enter this information in the third blank column of the table in the row marked "Engine Service".

D — The confirmation test results for 3 of the applicants for engine service positions were equal to or greater than 0.04. Enter this information in the fourth blank column of the table in the row marked "Engine Service".

E — The last row, marked "TOTAL", requires you to add the numbers in each of the columns. With this example, 157 applicants for engine service positions and 107 applicants for train service positions were subjected to screening tests. The total for that column would be 264 (i.e., 157 + 107). The same procedure should be used for each column. (i.e., add all the numbers in that column and place the answer in the last row).

Please note that our sample data collection form also has information for train service workers on line two. The same procedures outlined for engine service should be followed for entering the data on train service workers. With applicants for train service positions, 107 screening tests were conducted resulting in 3 confirmation tests. No results were equal to or greater than 0.02, but less than 0.04; the confirmation test result for 1 of the train service applicants was equal to or greater than 0.04. This information is entered in the row marked "Train Service".

Note that adding up the numbers for confirmation results in columns three and four will not always match the number entered in the second column, "NUMBER OF CONFIRMATION TESTS". These numbers may differ since some confirmation test results may be less than 0.02.

PRE-EMPLOYMENT				
EMPLOYEE CATEGORY	NUMBER OF SCREENING TESTS	NUMBER OF CONFIRMATION TESTS	NUMBER OF CONFIRMATION TEST RESULTS EQUAL TO OR GREATER THAN 0.02, BUT LESS THAN 0.04	NUMBER OF CONFIRMATION TEST RESULTS EQUAL TO OR GREATER THAN 0.04
Engine Service	157	6	2	3
Train Service	107	3	0	1
TOTAL	264	9	2	4

A B C D E

Remember that the same procedures indicated above are to be used for completing all of the categories for testing in Section C.

Page 5 **OTHER ALCOHOL TESTING/PROGRAM INFORMATION** (Section D) requests information on employees tested for drugs and alcohol at the same time and that you complete tables dealing with violations of other alcohol provisions/prohibitions of the regulation and refusals for testing.

Page 5 **Number of employees administered drug and alcohol tests at the same time resulting in a verified positive drug test and an alcohol test indicating an alcohol concentration of 0.04 or greater**, requires that a count of all such employees be entered in the indicated box.

Page 5 **VIOLATIONS OF OTHER ALCOHOL PROVISIONS/PROHIBITIONS OF THIS REGULATION** requires supplying the number of covered employees who used alcohol prior to performing a safety-sensitive function, while performing a safety-sensitive function, and before taking a required post-accident alcohol test. The action taken with covered employees who violate any of these FRA alcohol regulation provisions is also to be supplied. Other violations not delineated in this table may also be provided.

Page 5 **EMPLOYEES WHO REFUSED TO SUBMIT TO AN ALCOHOL TEST** requires a count of the **NUMBER OF COVERED EMPLOYEES** who refused to submit to a **random** or **non-random** (pre-employment, reasonable suspicion, return to duty, or follow-up) alcohol test required under the FRA regulation.

Page 5 **ALCOHOL TRAINING/EDUCATION** (Section E) requires information on the number of supervisory personnel who have received the required alcohol training during the current reporting period.

FRA ALCOHOL TESTING MIS DATA COLLECTION FORM OMB No. 2130-0526

YEAR COVERED BY THIS REPORT: 19___

A. RAILROAD EMPLOYER INFORMATION

Company _____

Address _____

_____

_____

I, the undersigned, certify the information provided on the attached Federal Railroad Administration Alcohol Testing Management Information System Data Collection Form is, to the best of my knowledge and belief, true, correct, and complete for the period stated.

_____
Signature

_____
Title

_____
Date of Signature

_____
Phone Number

Title 18, U.S.C. Section 1001, makes it a criminal offense subject to a maximum fine of $10,000, or imprisonment for not more than 5 years, or both, to knowingly and willfully make or cause to be made any false or fraudulent statements or representations in any matter within the jurisdiction of any agency of the United States. The willful falsification of any information in this report may also subject the submitter to civil or criminal prosecution under Title 45, U.S.C. Section 438(e).

The Federal Railroad Administration estimates that the average burden for this report form is 8 hours. You may submit any comments concerning the accuracy of this burden estimate or any suggestions for reducing the burden to: Office of Safety; Federal Railroad Administration; 400 7th St., S.W.; Washington, D.C. 20590; OR Office of Management and Budget, Paperwork Reduction Project (2130-0526); Washington, D.C. 20503.

FRA Form No. FRAF6180.95A 1

B. COVERED EMPLOYEES

COVERED EMPLOYEES						
EMPLOYEE CATEGORY	NUMBER OF FRA COVERED EMPLOYEES	NUMBER OF EMPLOYEES COVERED BY MORE THAN ONE DOT OPERATING ADMINISTRATION				
		FAA	FHWA	FTA	RSPA	USCG
Engine Service						
Train Service						
Dispatcher/Operator						
Signal Service						
Other*						
TOTAL						

* Includes yardmasters, hostlers (non-engineer craft), bridge tenders, switch tenders, and other miscellaneous employees performing covered service as defined in 49 CFR 228.5 (c).

READ BEFORE COMPLETING THE REMAINDER OF THIS FORM:

1. All items refer to the **current** reporting period **only** (for example, January 1, 1994 - December 31, 1994).

2. This report is only for testing **REQUIRED BY THE FEDERAL RAILROAD ADMINISTRATION (FRA) AND THE U.S. DEPARTMENT OF TRANSPORTATION (DOT)**:

- Results should be reported only for employees in **COVERED POSITIONS** as defined by the FRA alcohol testing regulations.

- The information requested should only include testing for alcohol using the standard procedures required by DOT regulation 49 CFR Part 40.

3. Information on refusals for testing should only be reported in Section D ["OTHER ALCOHOL TESTING/PROGRAM INFORMATION"]. Do not include refusals for testing in other sections of this report.

4. Complete all items; DO NOT LEAVE ANY ITEM BLANK. If the value for an item is zero (0), place a zero (0) on the form.

C. ALCOHOL TESTING INFORMATION

EMPLOYEE CATEGORY	NUMBER OF SCREENING TESTS	NUMBER OF CONFIRMATION TESTS	NUMBER OF CONFIRMATION TEST RESULTS EQUAL TO OR GREATER THAN 0.02, BUT LESS THAN 0.04	NUMBER OF CONFIRMATION TEST RESULTS EQUAL TO OR GREATER THAN 0.04
PRE-EMPLOYMENT				
Engine Service				
Train Service				
Dispatcher/Operator				
Signal Service				
Other				
Total				
RANDOM				
Engine Service				
Train Service				
Dispatcher/Operator				
Signal Service				
Other				
Total				
RETURN TO DUTY				
Engine Service				
Train Service				
Dispatcher/Operator				
Signal Service				
Other				
Total				
FOLLOW-UP				
Engine Service				
Train Service				
Dispatcher/Operator				
Signal Service				
Other				
Total				

Number of applicants/transfers denied employment/transfer following an alcohol test indicating an alcohol concentration of 0.04 or greater:	

Number of employees who engaged in alcohol misuse who were returned to duty in a covered position (having complied with the recommendations of a substance abuse professional as described in FRA regulations):	

FRA Form No. FRAF6180.95A 3

C. ALCOHOL TESTING INFORMATION (continued)

EMPLOYEE CATEGORY	NUMBER OF SCREENING TESTS	NUMBER OF CONFIRMATION TESTS	NUMBER OF CONFIRMATION TEST RESULTS EQUAL TO OR GREATER THAN 0.02, BUT LESS THAN 0.04	NUMBER OF CONFIRMATION TEST RESULTS EQUAL TO OR GREATER THAN 0.04
FOR CAUSE ALCOHOL TESTING DUE TO ACCIDENT*/INJURY *(Accidents NOT qualifying under 49 CFR Part 219 Subpart C) (Testing Conducted Under: FRA Rule___ Railroad Rule___)				
Engine Service				
Train Service				
Dispatcher/Operator				
Signal Service				
Other				
TOTAL				
DUE TO RULES VIOLATION (Testing Conducted Under: FRA Rule___ Railroad Rule___)				
Engine Service				
Train Service				
Dispatcher/Operator				
Signal Service				
Other				
TOTAL				
REASONABLE SUSPICION				
Engine Service				
Train Service				
Dispatcher/Operator				
Signal Service				
Other				
TOTAL				

FRA Form No. FRAF6180.95A 4

D. OTHER ALCOHOL TESTING/PROGRAM INFORMATION

Number of employees administered drug and alcohol tests at the same time resulting in a verified positive drug test and an alcohol test indicating an alcohol concentration of 0.04 or greater:	

VIOLATIONS OF OTHER ALCOHOL PROVISIONS/PROHIBITIONS OF THIS REGULATION		
NUMBER OF COVERED EMPLOYEES	VIOLATION	ACTION TAKEN
	Covered employee used alcohol while performing safety-sensitive function.	
	Covered employee used alcohol within 4 hours of performing safety-sensitive function.	
	Covered employee used alcohol before taking a required post-accident alcohol test.	

EMPLOYEES WHO REFUSED TO SUBMIT TO AN ALCOHOL TEST	Number
Covered employees who refused to submit to a **random** alcohol test required under the FRA regulation:	
Covered employees who refused to submit to a **non-random** alcohol test required under the FRA regulation:	

E. ALCOHOL TRAINING/EDUCATION

TRAINING DURING CURRENT REPORTING PERIOD	Number
Supervisory personnel who have received initial training on the specific contemporaneous physical, behavioral, and performance indicators of probable alcohol use as required by FRA alcohol testing regulations:	

FRA Form No. FRAF6180.95A 5

[59 FR 7468, Feb. 15, 1994]

APPENDIX D 4 - ALCOHOL TESTING MANAGEMENT INFORMATION SYSTEM (MIS) "EZ" DATA COLLECTION FORM

INSTRUCTIONS

The following instructions are to be used as a guide for completing the Federal Railroad Administration (FRA) **Alcohol Testing MIS "EZ" Data Collection Form**. This form should only be used if there is **no alcohol misuse** to be reported by your company. These instructions outline and explain the information requested and indicate the probable sources for this information. This reporting form includes three sections. These sections address the data elements required in the FRA and the U.S. Department of Transportation (DOT) alcohol testing regulations.

SECTION A - RAILROAD EMPLOYER INFORMATION requires the company name for which the report is done and a current address. Below this, a signature, date, and current telephone (including the area code) are required certifying the correctness and completeness of the form.

SECTION B - COVERED EMPLOYEES requires a count for each Hours of Service Act employee category that must be tested under FRA regulations. The categories are: "Engine Service", "Train Service", "Dispatcher/Operator", "Signal Service", and "Other." The **OTHER** category is a count of employees performing covered service that are not included in specific preceding categories. Examples include yardmasters, hostlers (non-engineer craft), bridge tenders, switch tenders, etc. These counts should be based on the company records as of January 1 of the reported year. The **TOTAL** is a count of **all** covered employees for **all** categories combined, i.e., the sum of the column.

Additional information must be completed if your company employs personnel who perform duties covered by the alcohol rules of more than one DOT operating administration. **NUMBER OF EMPLOYEES COVERED BY MORE THAN ONE DOT OPERATING ADMINISTRATION**, requires that you identify the number of employees in each employee category under the appropriate additional operating administration(s).

SECTION C - ALCOHOL TESTING INFORMATION requires information for alcohol testing, refusals for testing, and training/education. The first table requests information on the **NUMBER OF ALCOHOL SCREENING TESTS CONDUCTED** in each category for testing. All numbers entered into the pre-employment (and transfer to covered service) section of the table should be separated into the category of employment for which the person was applying or transferring. The other categories are for employee testing and require information for employees in **covered positions** only. Enter the number of alcohol screening tests conducted by employee category for each category of testing. Testing categories include: (1) random, (2) for cause testing due to accidents/injuries, (3) for cause testing due to rule violations, (4) reasonable suspicion, (5) return to duty, and (6) follow-up. Each column in the table should be added and the answer entered in the row marked "**TOTAL**".

Following the table that summarizes **ALCOHOL TESTING INFORMATION**, you must provide a count of **employees who engaged in alcohol misuse who were returned to duty in a covered position (having complied with the recommendations of a substance abuse professional as described in FRA regulations)**. This information should be available from the personnel office and/or alcohol program manager.

EMPLOYEES WHO REFUSED TO SUBMIT TO AN ALCOHOL TEST requires a count of the **NUMBER OF COVERED EMPLOYEES** who refused to submit to a **random** or **non-random** (pre-employment, reasonable suspicion, return to duty, follow-up, or for cause testing) alcohol test required under the FRA regulation.

ALCOHOL TRAINING/EDUCATION DURING CURRENT REPORTING PERIOD requires information on the number of supervisory personnel who have received alcohol training during the current reporting period.

FRA ALCOHOL TESTING MIS "EZ" DATA COLLECTION FORM OMB No. 2130-0526
(No Alcohol Misuse)

YEAR COVERED BY THIS REPORT: 19__

A. RAILROAD EMPLOYER INFORMATION

Company _____

Address _____

_____

_____

I, the undersigned, certify the information provided on the attached Federal Railroad Administration Alcohol Testing Management Information System "EZ" Data Collection Form is, to the best of my knowledge and belief, true, correct, and complete for the period stated.

_____
Signature

_____
Title

_____
Date of Signature

_____
Phone Number

Title 18, U.S.C. Section 1001, makes it a criminal offense subject to a maximum fine of $10,000, or imprisonment for not more than 5 years, or both, to knowingly and willfully make or cause to be made any false or fraudulent statements or representations in any matter within the jurisdiction of any agency of the United States. The willful falsification of any information in this report may also subject the submitter to civil or criminal prosecution under Title 45, U.S.C. Section 438(e).

The Federal Railroad Administration estimates that the average burden for this report form is 4 hours. You may submit any comments concerning the accuracy of this burden estimate or any suggestions for reducing the burden to: Office of Safety; Federal Railroad Administration; 400 7th St., S.W.; Washington, D.C. 20590; OR Office of Management and Budget, Paperwork Reduction Project (2130-0526); Washington, D.C. 20503.

FRA Form No. FRAF6180.95B 1

B. COVERED EMPLOYEES

COVERED EMPLOYEES						
EMPLOYEE CATEGORY	NUMBER OF FRA COVERED EMPLOYEES	NUMBER OF EMPLOYEES COVERED BY MORE THAN ONE DOT OPERATING ADMINISTRATION				
		FAA	FHWA	FTA	RSPA	USCG
Engine Service						
Train Service						
Dispatcher/Operator						
Signal Service						
Other*						
TOTAL						

* Includes yardmasters, hostlers (non-engineer craft), bridge tenders, switch tenders, and other miscellaneous employees performing covered service as defined in 49 CFR 228.5 (c).

C. ALCOHOL TESTING INFORMATION

NUMBER OF ALCOHOL SCREENING TESTS CONDUCTED							
EMPLOYEE CATEGORY	PRE-EMPLOYMENT	RANDOM	FOR CAUSE Accident/Injury Testing Conducted Under Rule: FRA ___ Railroad ___	FOR CAUSE Rules Violation Testing Conducted Under Rule: FRA ___ Railroad ___	REASONABLE SUSPICION	RETURN TO DUTY	FOLLOW-UP
Engine Service							
Train Service							
Dispatcher/Operator							
Signal Service							
Other							
Total							

Number of employees who engaged in alcohol misuse who were returned to duty in a covered position (having complied with the recommendations of a substance abuse professional as described in FRA regulations):	

EMPLOYEES WHO REFUSED TO SUBMIT TO AN ALCOHOL TEST	Number
Covered employees who refused to submit to a **random** alcohol test required under the FRA regulation:	
Covered employees who refused to submit to a **non-random** alcohol test required under the FRA regulation:	

ALCOHOL TRAINING/EDUCATION DURING CURRENT REPORTING PERIOD	Number
Supervisory personnel who have received initial training on the specific contemporaneous physical, behavioral, and performance indicators of probable alcohol use as required by FRA alcohol testing regulations:	

FRA Form No. FRAF6180.95B 2

[59 FR 7477, Feb. 15, 1994]

PART 220—RADIO STANDARDS AND PROCEDURES

Subpart A—General

Sec.
220.1 Scope.
220.3 Application.
220.5 Definitions.
220.7 Penalty.

Subpart B—Radio Procedures

220.21 Railroad operating rules; radio communications; recordkeeping.
220.23 Publication of radio information.
220.25 Instruction of employees.

220.27 Identification.
220.29 Statement of letters and numbers.
220.31 Initiating a transmission.
220.33 Receiving a transmission.
220.35 Ending a transmission.
220.37 Voice test.
220.39 Continuous monitoring.
220.41 Notification on failure of train radio.
220.43 Communication consistent with rules.
220.45 Communication must be complete.
220.47 Emergencies.
220.49 Switching, backing or pushing.
220.51 Signal indications.

Subpart C—Train Orders

220.61 Transmission of train orders by radio.
APPENDIX A TO PART 220—RECOMMENDED PHONETIC ALPHABET
APPENDIX B TO PART 220—RECOMMENDED PRONUNCIATION OF NUMERALS
APPENDIX C TO PART 220—SCHEDULE OF CIVIL PENALTIES

AUTHORITY: 49 U.S.C. 20103, 20107, 20111, 20112, 21301, 21304, 21311 (1994) (formerly codified at 45 U.S.C. 431, 437, 438); Pub. L. 103–272 (1994); and 49 CFR 1.49(m).

SOURCE: 42 FR 5065, Jan. 27, 1977, unless otherwise noted.

Subpart A—General

§ 220.1 Scope.

This part prescribes minimum requirements governing the use of radio communications in connection with railroad operations. The term ''radio communications'' refers to the transmission and reception of voice communications by radio. So long as these minimum requirements are met, railroads may adopt additional or more stringent requirements.

§ 220.3 Application.

(a) Except as provided in paragraph (b) of this section, this part applies to railroads that operate trains or other rolling equipment on standard gage track which is part of the general railroad system of transportation.

(b) This part does not apply to:

(1) A railroad that operates only on track inside an installation which is not part of the general railroad system of transportation; or

(2) Rapid transit operations in an urban area that are not connected with the general railroad system of transportation.

[42 FR 5065, Jan. 27, 1977, as amended at 53 FR 28600, July 28, 1988]

§ 220.5 Definitions.

As used in this part, the term:

(a) *Employee* means any person who is authorized by a railroad to use its radio facilities in connection with railroad operations.

(b) *Railroad operation* means any movement of a train, engine, on-track equipment, or track motor car, single or in combination with other equipment, on the track of a railroad.

(c) *Train Order* means any mandatory directive issued as authority for the conduct of a railroad operation which is transmitted by radio.

(d) *Division headquarters* means the location designated by the railroad where a high-level operating manager (*e.g.*, a superintendent, division manager, or equivalent), who has jurisdiction over a portion of the railroad, has an office.

(e) *System headquarters* means the location designated by the railroad as the general office for the railroad system.

[42 FR 5065, Jan. 27, 1977, as amended at 59 FR 43071, Aug. 22, 1994]

§ 220.7 Penalty.

Any person (including a railroad and any manager, supervisor, official, or other employee or agent of a railroad) who violates any requirement of this part or causes the violation of any such requirement is subject to a civil penalty of at least $250 and not more than $10,000 per violation, except that: Penalties may be assessed against individuals only for willful violations, and, where a grossly negligent violation or a pattern of repeated violations has created an imminent hazard of death or injury to persons, or has caused death or injury, a penalty not to exceed $20,000 per violation may be assessed. Each day a violation continues shall constitute a separate offense. See appendix C to this part for a statement of agency civil penalty policy.

[53 FR 28600, July 28, 1988, as amended at 53 FR 52930, Dec. 29, 1988]

Subpart B—Radio Procedures

§220.21 Railroad operating rules; radio communications; recordkeeping.

(a) After August 1, 1977, the operating rules of each railroad with respect to radio communications shall conform with the requirements of this part.

(b) On or after November 21, 1994, or 30 days before commencing to use radio communications in connection with railroad operations, whichever is later, each railroad shall retain one copy of its current operating rules with respect to radio communications, and of each amendment to these rules, at the locations prescribed in paragraphs (b) (1) and (2) of this section. These records shall be made available to representatives of the Federal Railroad Administration for inspection and copying during normal business hours.

(1) Each Class I railroad, each Class II railroad, the National Railroad Passenger Corporation, and each railroad providing commuter service in a metropolitan or suburban area shall retain such rules at each of its division headquarters and at the system headquarters of the railroad; and

(2) Each Class III railroad and any other railroad subject to this part but not subject to paragraph (b)(1) of this section shall retain such rules at the system headquarters of the railroad.

[42 FR 5065, Jan. 27, 1977, as amended at 59 FR 43072, Aug. 22, 1994]

§220.23 Publication of radio information.

Each railroad shall designate its territory where radio base stations are installed, where wayside stations may be contacted, and designate appropriate radio channels by publishing them in a timetable or special instruction. The publication shall indicate the periods during which base and wayside radio stations are attended or in operation.

§220.25 Instruction of employees.

Each employee who is authorized to use a radio in connection with a railroad operation, shall be:

(a) Provided with a copy of the railroad's operating rules governing the use of radio communication in a railroad operation.

(b) Instructed in the proper use of radio communication as part of the program of instruction prescribed in §217.11 of this chapter.

§220.27 Identification.

(a) Except as provided in paragraph (c) of this section, the identification of each wayside, base or yard station shall include at least the following minimum elements, stated in the order listed:

(1) Name of railroad. An abbreviated name or initial letters of the railroad may be used where the name or initials are in general usage and are understood in the railroad industry;

(2) Name of office or other unique designation of the station; and

(3) Location of the station.

(b) Except as provided in paragraph (c) of this section, the identification of each mobile station shall consist of the following elements, stated in the order listed:

(1) Name of the railroad. An abbreviated name or initial letters of the railroad may be used where the name or initial letters are in general usage and are understood in the railroad industry;

(2) Train name (number), if one has been assigned, or other appropriate unit designation; and

(3) The word *engine*, *caboose*, *motorcar*, *pakset* or other word which indicates to the listener the precise mobile transmitting station, unless identical to the requirement of paragraph (b)(2) of this section.

(c) If positive identification is achieved in connection with switching, classification, and similar operations wholly within a yard, fixed and mobile units may use short identification after the initial transmission and acknowledgement consistent with applicable Federal Communications Commission regulations governing ''Station Identification''.

§220.29 Statement of letters and numbers.

(a) If necessary for clarity, a phonetic alphabet shall be used to pronounce any letter used as an initial, except initial letters of railroads. See appendix A of this part for the recommended phonetic alphabet.

(b) A word which needs to be spelled for precision or clarity shall first be pronounced, and the word shall then be spelled. If necessary, the word shall be spelled again, using a phonetic alphabet.

(c) Numbers shall be spoken by digit, except that exact multiples of hundreds and thousands may be stated as such. A decimal point shall be indicated by the word ''decimal''. (See appendix B to this part, for a recommended guide to the pronunication of numbers.)

§ 220.31 Initiating a transmission.

Before transmitting by radio, an employee shall:

(a) Listen to insure that the channel on which he intends to transmit is not already in use;

(b) Identify his station in accordance with the requirements of § 220.27; and

(c) Verify that he has made radio contact with the person or station with whom he intends to communicate by listening for an acknowledgement. If the station acknowledging his transmission fails to identify itself properly, the employee shall require a proper identification before proceeding with the transmission.

§ 220.33 Receiving a transmission.

(a) Upon receiving a radio call from another station, an employee shall promptly acknowledge the call, identifying his station in accordance with the requirements of § 220.27 and stand by to receive. An employee need not attend the radio, however, if this would interfere with other immediate duties relating to the safety of railroad operations.

(b) An employee shall acknowledge receipt of all transmissions directed to him or his station.

(c) An employee who receives a tansmission shall repeat it to the transmitting party unless the communication:

(1) Relates to yard switching operations;

(2) Is a recorded message from an automatic alarm device; or

(3) Is general in nature and does not contain any information, instruction or advice which could affect the safety of a railroad operation.

§ 220.35 Ending a transmission.

(a) At the close of each transmission to which a response is expected, the transmitting employee shall say ''over'' to indicate to the receiving employee that the transmission is ended.

(b) At the close of each transmission to which no response is expected, the transmitting employee shall state his identification followed by the word ''out'' to indicate to the receiving employee that the exchange of transmissions is complete.

§ 220.37 Voice test.

(a) Each radio which is used in connection with a railroad operation outside yard limits shall be tested at the point where the train is originally made up. At least once during each tour of duty, the engineer and conductor shall be responsible for the testing of the radio to verify that the radio is operating properly on the engine and caboose. The tests shall consist of an exchange of voice transmissions with another station. The other station shall advise the station conducting the test of the quality and readability of its transmission.

(b) Any radio found not to be functioning properly shall be removed from service until it has been repaired.

(c) When a radio is removed from service, each crew member of the train and the train dispatcher or other employee designated by the railroad shall be so notified.

§ 220.39 Continuous monitoring.

Engine and caboose radios must be turned on to the appropriate channel as designated in § 220.23 with the volume adjusted to receive communications while the engine or caboose is manned.

§ 220.41 Notification on failure of train radio.

The failure of an engine or caboose radio en route shall be reported as soon as practicable to the train dispatcher or other employee designated by the railroad by any alternate means of communication available.

§220.43 Communication consistent with rules.

Radio communication may not be used in connection with a railroad operation in a manner which conflicts with the requirements of this part 220, Federal Communication Commission regulations or the railroad's operating rules. The use of citizen band radios for railroad operating purposes is prohibited.

§220.45 Communication must be complete.

Any radio communication which is not fully understood or completed in accordance with the requirements of part 220 and the operating rules of the railroad, shall not be acted upon and shall be treated as though not sent.

§220.47 Emergencies.

(a) An emergency transmission shall be preceded by the word ''emergency'', repeated three times. An emergency transmission shall have priority over all other transmissions and the frequency or channel shall be kept clear of non-emergency traffic for the duration of the emergency transmission.

(b) Emergency transmissions shall be used to report derailments, collisions, storms, wash-outs, fires, obstructions to tracks, and other hazardous conditions which could result in death or injury, damage to property or serious disruption of railroad operations. Emergency transmissions shall describe as completely as possible the nature, degree and location of the hazard.

§220.49 Switching, backing or pushing.

When radio communication is used in lieu of hand signals in connection with the switching, backing or pushing of a train, engine, or car, the employee directing the movement shall give complete instructions or keep in continuous radio contact with the employees receiving the instructions. When backing or pushing a train, engine or cars, the distance of the movement must be specified, and the movement must stop in one-half the remaining distance unless additional instructions are received. If the instructions are not understood or continuous radio contact is not maintained, the movement shall be stopped immediately and may not be resumed until the misunderstanding has been resolved, radio contact has been restored, or communication has been achieved by hand signals or other procedures in accordance with the operating rules of the railroad.

§220.51 Signal indications.

(a) No information may be given by radio to a train or engine crew about the position or aspect displayed by a fixed signal. However, radio may be used by a train crew member to communicate information about the position or aspect displayed by a fixed signal to other members of the same crew.

(b) Except as provided in the railroad's operating rules, radio communication may 3882not be used to convey instructions which would have the effect of overriding the indication of a fixed signal in automatic block territory.

Subpart C—Train Orders

§220.61 Transmission of train orders by radio.

(a) Train orders may be transmitted by radio only when authorized by railroad's operating rules and must be transmitted in accordance with the railroad's operating rules and the requirements of this part 220.

(b) The procedures for transmission of train orders by radio are as follows:

(1) The dispatcher or operator shall call the addresses of the train order and state his intention to transmit the train order.

(2) Before the train order is transmitted, the employee to receive and copy the train order shall state his name, identification or call sign, location, and that he is prepared to receive a train order. Train orders may not be received and copied by an employee operating the controls on an engine of a moving train. Train orders may not be transmitted to the crew of a moving train when, in the judgment of either the conductor, the engineer, or the train dispatcher, the train order cannot be received and copied without impairing the safe operation of their Train.

(3) Train orders shall be copied in writing by the receiving employee in

the format prescribed in the railroad's operating rules.

(4) After the train order has been received and copied, it shall be immediately repeated in its entirety. After verifying the accuracy of the repeated train order, the dispatcher shall then state ''complete'', the time, and the initials of the employee designated by the railroad. Employees copying train orders must then acknowledge by repeating ''complete'' and the time.

(5) Before a train order is acted upon, both the conductor and engineer must have a written copy of the train order and make certain that the train order is read and understood by other members of the crew.

(6) A train order which has not been completed or which does not comply with the requirements of the railroad's operating rules, may not be acted upon and must be treated as though not sent. Information contained in a train order may not be acted upon by persons other than those to whom the train order is addressed.

[42 FR 5065, Jan. 27, 1977, as amended at 42 FR 12176, Mar. 3, 1977]

APPENDIX A TO PART 220—RECOMMENDED PHONETIC ALPHABET

A—ALFA
B—BRAVO
C—CHARLIE
D—DELTA
E—ECHO
F—FOXTROT
G—GOLF
H—HOTEL
I—INDIA
J—JULIET
K—KILO
L—LIMA
M—MIKE
N—NOVEMBER
O—OSCAR
P—PAPA
Q—QUEBEC
R—ROMEO
S—SIERRA
T—TANGO
U—UNIFORM
V—VICTOR
W—WHISKEY
X—XRAY
Y—YANKEE
Z—ZULU

The letter ''ZULU'' should be written as ''Z'' to distinguish it from the numeral ''2''.

APPENDIX B TO PART 220—RECOMMENDED PRONUNCIATION OF NUMERALS

To distinguish numbers from similar sounding words, the word ''figures'' should be used preceding such numbers. Numbers should be pronounced as follows:

Number	Spoken
0	0
1	WUN
2	TOO
3	THUH-REE-
4	FO-WER
5	FI-YIV
6	SIX
7	SEVEN
8	ATE
9	NINER

(The figure ZERO should be written as ''0'' to distinguish it from the letter ''O''. The figure ONE should be underlined to distinguish it from the letter ''I''. When railroad rules require that numbers be spelled, these principles do not apply.)

The following examples illustrate the recommended pronunciation of numerals:

Number	Spoken
44	FO-WER FO-WER
500	FI-YIV HUNDRED
1000	WUN THOUSAND
1600	WUN SIX THOUSAND
14899	WUN FO-WER ATE NINER NINER
20.3	TOO ZERO DECIMAL THUH-REE

APPENDIX C TO PART 220—SCHEDULE OF CIVIL PENALTIES [1]

Section	Violation	Willful violation
220.21 Railroad Operating rules; radio communications:		
(a)	$5,000	$7,500
(b)	2,500	5,000
220.23 Publication of radio information	2,500	5,000
220.25 Instruction of employees	5,000	7,500
220.27 Identification	1,000	2,000
220.29 Statement of letters and numbers	1,000	2,000
220.31 Initiating a transmission	1,000	2,000
220.33 Receiving a transmission	1,000	2,000
220.35 Ending a transmission	1,000	2,000
220.37 Voice test	5,000	7,500
220.39 Continuous monitoring	2,500	5,000
220.41 Notification on failure of train radio	2,500	5,000
220.43 Communication consistent with the rules	2,500	5,000
220.45 Complete communications	2,500	5,000
220.47 Emergencies	2,500	5,000
220.49 Switching, backing or pushing	5,000	7,500

APPENDIX C TO PART 220—SCHEDULE OF CIVIL PENALTIES [1]—Continued

Section	Violation	Willful violation
220.51 Signal indications	5,000	7,500
220.61 Transmission of train orders by radio	5,000	7,500

[1] A penalty may be assessed against and only for a willful violation. The Administrator reserves the right to assess a penalty of up to $20,000 for any violation where circumstances warrant. See 49 CFR part 209, appendix A.

[53 FR 52930, Dec. 29, 1988]

PART 221—REAR END MARKING DEVICE—PASSENGER, COMMUTER AND FREIGHT TRAINS

Subpart A—General

Sec.
221.1 Scope.
221.3 Application.
221.5 Definitions.
221.7 Civil penalty
221.9 Waivers.
221.11 State regulation.

Subpart B—Marking Devices

221.13 Marking device display.
221.14 Marking devices.
221.15 Marking device inspection.
221.16 Inspection procedure.
221.17 Movement of defective equipment.
APPENDIX A TO PART 221—PROCEDURES FOR APPROVAL OF REAR END MARKING DEVICES
APPENDIX B TO PART 221—APPROVED REAR END MARKING DEVICES
APPENDIX C TO PART 221—SCHEDULE OF CIVIL PENALTIES

AUTHORITY: 45 U.S.C. 431 and 438, as amended; Pub. L. 100–342; and 49 CFR 1.49(m).

SOURCE: 42 FR 2321, Jan. 11, 1977, unless otherwise noted.

Subpart A—General

§221.1 Scope.

This part prescribes minimum requirements governing highly visible marking devices for the trailing end of the rear car of all passenger, commuter and freight trains. So long as these minimum requirements are met, railroads may adopt additional or more stringent requirements for rear end marking devices.

§221.3 Application.

(a) Except as provided in paragraph (b) of this section, this part applies to passenger, commuter and freight trains when operated on a standard gage main track which is part of the general railroad system of transportation.

(b) This part does not apply to:

(1) A railroad that operates only trains consisting of historical or antiquated equipment for excursion, educational, or recreational purposes;

(2) A train that operates only on track inside an installation which is not part of the general railroad system of transportation;

(3) Rapid transit operations in an urban area that are not connected with the general railroad system of transportation.

(4) A railroad that operates only one train at any given time.

[42 FR 2321, Jan. 11, 1977, as amended at 53 FR 28600, July 28, 1988]

§221.5 Definitions.

As used in this part:

(a) *Train* means a locomotive unit or locomotive units coupled, with or without cars, involved in a railroad operation conducted on a main track. It does not include yard movements.

(b) *Commuter train* means a short haul passenger train operating on track which is part of the general railroad system of transportation, within an urban, suburban or metropolitan area. It includes a passenger train provided by an instrumentality of a State or political subdivision thereof.

(c) *Locomotive* means a self-propelled unit of equipment designed for moving other equipment in revenue service and includes a self-propelled unit designed to carry freight or passenger traffic, or both.

(d) *Main track* means a track, other than an auxiliary track, extending through yards or between stations, upon which trains are operated by timetable or train order or both, or the use of which is governed by a signal system.

(e) *Train order* means mandatory directives issued as authority for the conduct of a railroad operation outside of yard limits.

(f) *Red-orange-amber color range* means those colors defined by chromaticity coordinates, as expressed in terms of the International Commission on Illumination's 1931 Colormetric System, which lie within the region bounded by the spectrum locus and lines defined by the following equations:

X+Y=.97 (white boundary)

Y=X—.12 (green boundary)

(g) *Administrator* means the Federal Railroad Administrator, the Deputy Administrator, or any official of the Federal Railroad Administration to whom the Administrator has delegated his authority under this part.

(h) *Effective intensity* means that intensity of a light in candela as defined by the Illuminating Engineering Society's Guide for Calculating the Effective Intensity of Flashing Signal Lights, November, 1964.

(i) *Qualified person* means any person who has the skill to perform the task and has received adequate instruction.

[42 FR 2321, Jan. 11, 1977; 42 FR 3843, Jan. 21, 1977, as amended at 51 FR 25185, July 10, 1986]

§ 221.7 Civil penalty.

Any person (including a railroad and any manager, supervisor, official, or other employee or agent of a railroad) who violates any requirement of this part or causes the violation of any such requirement is subject to a civil penalty of at least $250 and not more than $10,000 per violation, except that: Penalties may be assessed against individuals only for willful violations, and, where a grossly negligent violation or a pattern of repeated violations has created an imminent hazard of death or injury to persons, or has caused death or injury, a penalty not to exceed $20,000 per violation may be assessed. Each day a violation continues shall constitute a separate offense. See appendix C to this part for a statement of agency civil penalty policy.

[53 FR 28600, July 28, 1988, as amended at 53 FR 52930, Dec. 29, 1988]

§ 221.9 Waivers.

(a) A railroad may petition the Federal Railroad Administrator for a waiver of compliance with any requirement prescribed in this part.

(b) Each petition for a waiver under this section must be filed in the manner and contain the information required by part 211 of this chapter.

(c) If the Administrator finds that a waiver of compliance is in the public interest and is consistent with railroad safety, he may grant the waiver subject to any condition he deems necessary. Notice of each waiver granted, including a statement of the reasons therefor, will be published in the FEDERAL REGISTER.

§ 221.11 State regulation.

Notwithstanding the provisions of this part, a State may continue in force any law, rule, regulation, order, or standard that was in effect on July 8, 1976, relating to lighted marking devices on the rear car of freight trains except to the extent that such law, rule, regulation, order, or standard would cause such cars to be in violation of this part.

Subpart B—Marking Devices

§ 221.13 Marking device display.

(a) During the periods prescribed in paragraph (b) of this section, each train to which this part applies that occupies or operates on main track shall (1) be equipped with, (2) display on the trailing end of the rear car of that train, and (3) continuously illuminate or flash a marking device prescribed in this subpart.

(b) Unless equipped with a functioning photoelectric cell activation mechanism complying with paragraph (c) of this section, the marking devices prescribed by this subpart shall be illuminated continuously or flash during the period between one hour before sunset and one hour after sunrise, and during all other hours when weather conditions so restrict visibility that the end silhouette of a standard box car cannot be seen from ½ mile on tangent track by a person having 20/20 corrected vision.

(c) Marking devices prescribed by this part and equipped with a functioning photoelectric cell activation mechanism shall illuminate or flash the device continuously when there is less

than 1.0 candela per square meter of ambient light.

(d) The centroid of the marking device must be located at a minimum of 48 inches above the top of the rail.

[51 FR 25185, July 10, 1986]

§221.14 Marking devices.

(a) As prescribed in §221.13, passenger, commuter and freight trains shall be equipped with at least one marking device, which has been approved by the Federal Railroad Adminstrator in accordance with the procedures included in appendix A of this part, and which has the following characteristics:

(1) An intensity of not less than 100 candela nor more than 1000 candela (or an effective intensity of not less than 100 candela nor more than 1000 candela for flashing lights) as measured at the center of the beam width;

(2) A horizontal beam with a minimum arc width of fifteen (15) degrees each side of the vertical center line, and a vertical beam with a minimum arc width of five (5) degrees each side of the horizontal center line as defined in terms of the 50 candela intensity points;

(3) A color defined by the red-orange-amber color range; and

(4) If a flashing light is used, a flash rate of not less than once every 1.3 seconds nor more than once every .7 seconds.

(b) Marking devices used on passenger and commuter trains in compliance with paragraph (a) of this section shall be lighted under the conditions prescribed in §221.13 (b) and (c).

(c) When a locomotive is operated singly, or at the rear of a train, highly visible marking devices may be provided by the use of:

(1) At least one marking device that complies with paragraph (a) of this section; or

(2) At least one illuminated red or amber classification light on the rear of the locomotive, provided it complies with paragraph (a) of this section; or

(3) The rear headlight of the locomotive illuminated on low beam.

[51 FR 25185, July 10, 1986]

§221.15 Marking device inspection.

(a) Each marking device displayed in compliance with this part shall be examined at each crew change point to assure that the device is in proper operating condition.

(b) This examination shall be accomplished either by visually observing that the device is functioning as required or that the device will function when required by either (1) repositioning the activation switch or (2) covering the photoelectric cell.

(c) This examination shall be conducted either by the train crew or some other qualified person, *Provided that*, if a non-train crewmember performs the examination, that person shall communicate his or her findings to the locomotive engineer of the new train crew.

(d) When equipped with a radio telemetry capability, a marker displayed in accordance with this part may be examined by observing the readout information displayed in the cab of the controlling locomotive demonstrating that the light is functioning as required in lieu of conducting a visual observation.

[51 FR 25185, July 10, 1986]

§221.16 Inspection procedure.

(a) Prior to operating the activation switch or covering the photoelectric cell when conducting this test, a non-train crew person shall determine that he is being protected against the unexpected movement of the train either under the procedures established in part 218 of this chapter or under the provisions of paragraph (b) of this section.

(b) In order to establish the alternative means of protection under this section, (1) the train to be inspected shall be standing on a main track; (2) the inspection task shall be limited to ascertaining that the marker is in proper operating condition; and (3) prior to performing the inspection procedure, the inspector shall personally contact the locomotive engineer or hostler and be advised by that person that they are occupying the cab of the controlling locomotive and that the train is and will remain secure against

movement until the inspection has been completed.

[51 FR 25185, July 10, 1986]

§ 221.17 Movement of defective equipment.

(a) Whenever the marking device prescribed in this part becomes inoperative enroute, the train may be moved to the next forward location where the marking device can be repaired or replaced.

(b) Defective rolling equipment which, because of the nature of the defect, can be placed only at the rear of a train for movement to the next forward location at which repairs can be made need not be equipped with marking devices prescribed in this part.

(c) When a portion of a train has derailed, and a portable marking device is not available, the remainder of the train may be moved to the nearest terminal without being equipped with the marking device prescribed in this part.

APPENDIX A TO PART 221—PROCEDURES FOR APPROVAL OF REAR END MARKING DEVICES

As provided in § 221.15 of this part, marking devices must be approved by the Administrator, Approval shall be issued in accordance with the following procedures:

(a) Each submission for approval of a marking device consisting of lighted elements only shall contain the following information:

(1) A detailed description of the device including the type, luminance description, size of lens, manufacturer and catalog number, lamp manufacturer, lamp type and model number, and any auxiliary optics used.

(2) A certification, signed by the chief operating officer of the railroad, that—

(i) The device described in the submission has been tested in accordance with the current ''Guidelines for Testing of FRA Rear End Marking Devices,'' copies of which may be obtained from the Office of Safety, Federal Railroad Administration, 2100 Second Street SW., Washington, DC 20590;

(ii) The results of the tests performed under paragraph (i) of this subsection demonstrate marking device performance in compliance with the standard perscribed in 49 CFR 221.15;

(iii) Detailed test records, including as a minimum the name and address of the testing organizations, the name of the individual in charge of the tests, a narrative description of the test procedures, the number of samples tested, and for each sample tested, the on-axis beam candela, the beam candela at the ±15 degree points in the horizontal plane, the beam candela at the ±5 degree points in the vertical plane, and the chromaticity coordinates, are maintained by the railroad and are available for inspection by the FRA at a designated location which is identified in the submission;

(iv) Marking devices of this type installed in the operating environment shall consist of the same type and model of components as were used in the samples tested for purposes of this approval submission.

(3) Unless otherwise qualified, acknowledgement of the receipt of the submission required by this section shall constitute approval of the device. The FRA reserves the right to review the test records maintained by the railroad, or to test independently any device submitted for approval under these procedures, and to withdraw the approval of such device at any time, after notice and opportunity for oral comment, if its performance in the operating environment fails to substantiate the rest results or to comply with 49 CFR 221.15.

(b)(1) Each submission for approval of a marking device consisting of non-lighted elements or a combination of lighted and non-lighted elements shall contain the following information:

(i) A detailed description of the device including the type of material, the reflectance factor, the size of the device, and the manufacturer and catalogue number;

(ii) A detailed description of the external litht source including the intensity throughout its angle of coverage, and the manufacturer and catalogue number;

(iii) A detailed description of the proposed test procedure to be used to demonstrate marking device compliance with the standard prescribed in 49 CFR 221.15, including any detailed mathematical data reflecting expected performance.

(2) FRA will review the data submitted under subsection (1) of this section, and in those instances in which compliance with 49 CFR 221.15 appears possible from a theoretical analysis, the FRA will authorize and may take part in testing to demonstrate such compliance.

(3) Where authorized testing has demonstrated compliance with 49 CFR 221.15, a railroad shall submit a certification, signed by the chief operating officer of the railroad, that—

(i) The device described in the original submission has been tested in accordance with the procedures described therein;

(ii) The results of the tests peformed under paragraph (i) of this subsection demonstrate marking device performance in compliance with the standard prescribed in 49 CFR 221.15;

(iii) Detailed test records, including as a minimum the name and address of the testing organization, the name of the individual in charge of the tests, a narrative description of the test procedure, a description of the external light source used, the number of samples tested, and for each sample tested, the on-axis beam candela, the beam candela at the ±15 degree points in the horizontal plane, the beam candela at the ±15 degree point in the vertical plane, and the chromaticity coordinates, are maintained by the railroad and are available for inspection by the FRA at a designated location which is identified in the submission;

(iv) Marking devices of this type installed in the operating environment and the external light source used to illuminate them shall consist of the same type and model of components as were used in the samples tested for purposes of this approval submission.

(4) Unless otherwise qualified, acknowledgement of the receipt of the submission required by this subsection shall constitute approval of the device. The FRA reserves the right to review the test records maintained by the railroad, or to test independently any device submitted for approval under these procedures, and to disapprove the use of such device at any time if its performance fails to comply with 49 CFR 221.15.

(c) Whenever a railroad elects to use a marking device which has been previously approved by the FRA, and is included in the current list in appendix B to this part, the submission shall contain the following information:

(1) The marking device model designation as it appears in appendix B.

(2) A certification, signed by the chief operating officer of the railroad that—

(i) Marking devices of this type installed in the operating environment shall consist of the same type and model of components as were used in the samples tested for the original approval.

(d) Each submission for approval of a marking device shall be filed in triplicate with the Office of Standards and Procedures, Office of Safety, Federal Railroad Administration, 2100 Second Street SW., Washington, DC 20590.

[42 FR 62004, Dec. 8, 1977]

APPENDIX B TO PART 221—APPROVED REAR END MARKING DEVICES

PART I—APPROVED DEVICES TESTED FOR OR BY MANUFACTURERS

1. Manufacturer: Star Headlight & Lantern Co., 168 West Main Street, Honeoye Falls, NY 14472.

FRA identification Nos. FRA–PLE–STAR–845–F (flasher) and FRA–PLE–STAR–845–C (steady burn).

2. Manufacturer: Julian A. McDermott Corp., 1639 Stephen Street, Ridgewood, Long Island, NY 11227.

FRA identification Nos. FRA–MEC–MCD–100–C (steady burn), FRA–MEC–MCD–100–F (flasher), FRA–MEC–MCD–300–C (steady burn), and FRA–MEC–MCD–300–F (flasher).

3. Manufacturer: American Electronics, Inc.,[1]40 Essex Street, Hackensack, NJ 07601.

FRA identification Nos. FRA–DRGW–YANK–300 (portable strobe), FRA–WP–YANK–301R (flashing), FRA–WP–YANK–305R (flashing), and FRA–WP–YANK–306R (steady burn).

PART II—APPROVED DEVICES TESTED FOR OR BY RAIL CARRIERS

1. Carrier: Atchison, Topeka & Santa Fe Railway Co., Technical Research & Development Department, 1001 Northeast Atchison Street, Topeka, Kans. 66616.

Manufacturer: Trans-Lite, Inc., P.O. Box 70, Milford, Conn. 06460.

FRA identification Nos. FRA–ATSF–TL–875–150, FRA–ATSF–TL–875–60, FRA–ATSF–TL–875–4412, and FRA–ATSF–TL–200.

2. Carrier: Amtrak—National Railroad Passenger Corporation, 400 North Capitol Street NW., Washington, DC 20001.

Manufacturer: (a) Trans-Lite, Inc., P.O. Box 70, Milford, Conn. 06460.

FRA identification Nos. FRA–ATK–TL–3895–1, FRA–ATK–TL–4491–2, FRA–ATK–TL–4491–3, and FRA–ATK–TL–FM–4491–1.

Manufacturer: (b) Luminator Division of Gulfton Industries, Inc., 1200 East Dallas North Parkway, Plano, Tex. 75074.

FRA identification No. FRA–ATK–LUM–0101890–001.

Manufacturer: (c) Whelen Engineering Co., Inc., Deep River, Conn. 06417.

FRA identification No. FRA–ATK–WHE–WERT–12.

[43 FR 36447, Aug. 17, 1978]

APPENDIX C TO PART 221—SCHEDULE OF CIVIL PENALTIES [1]

Section	Violation	Willful violation
221.13 Marking device display:		
(a) device not present, not displayed, or not properly illuminated	$5,000	$7,500
(d) device too close to rail	1,000	2,000
221.14 Marking devices: Use of unapproved or noncomplying device	2,500	5,000
221.15 Marking device inspection:		
(a) Failure to inspect at crew change	2,500	5,000
(b), (c) improper inspection	2,500	5,000

[1] NOTE: Yankee Metal Products Corp. previously produced these devices.

APPENDIX C TO PART 221—SCHEDULE OF CIVIL PENALTIES [1]—Continued

Section	Violation	Willful violation
221.16 Inspection procedure:		
(a) Failure to obtain protection	5,000	7,500
(b) Improper protection	2,500	5,000
221.17 Movement of defective equipment	(1)	(1)

[1] A penalty may be assessed against an individual only for a willful violation. The Administrator reserves the right to assess a penalty of up to $20,000 for any violation where circumstances warrant. See 49 CFR part 209, appendix A. Where the conditions for movement of defective equipment set forth in § 221.17 of this part are not met, the movement constitutes a violation of § 221.13 of this part.

[53 FR 52930, Dec. 29, 1988]

PART 223—SAFETY GLAZING STANDARDS—LOCOMOTIVES, PASSENGER CARS AND CABOOSES

Subpart A—General

Sec.
223.1 Scope.
223.3 Application.
223.5 Definitions.
223.7 Responsibility.

Subpart B—Specific Requirements

223.9 Requirements for new or rebuilt equipment.
223.11 Requirements for existing locomotives.
223.13 Requirements for existing cabooses.
223.15 Requirements for existing passenger cars.
223.17 Identification of equipped locomotives, passenger cars and cabooses.
APPENDIX A TO PART 223—CERTIFICATION OF GLAZING MATERIALS
APPENDIX B TO PART 223—SCHEDULE OF CIVIL PENALTIES

AUTHORITY: 45 U.S.C. 431 and 438, as amended; Pub. L. 100–342; and 49 CFR 1.49(m).

Subpart A—General

§ 223.1 Scope.

This part provides minimum requirements for glazing materials in order to protect railroad employees and railroad passengers from injury as a result of objects striking the windows of locomotives, caboose and passenger cars.

[44 FR 77352, Dec. 31, 1979]

§ 223.3 Application.

(a) This part applies to railroads that operate rolling equipment on standard gauge track that is a part of the general railroad system of transportation.

(b) This part does not apply to—

(1) Locomotives, cabooses, and passenger cars that operate only on track inside an installation that is not part of the general railroad system of transportation;

(2) Rapid transit operations in an urban area that are not connected with the general railroad system of transportation.

(3) Locomotives, passenger cars and cabooses that are historical or antiquated equipment and are used only for excursion, educational, recreational purposes or private transportation purposes.

(4) Locomotives that are used exclusively in designated service as defined in § 223.5(m).

[44 FR 77352, Dec. 31, 1979, as amended at 53 FR 28600, July 28, 1988]

§ 223.5 Definitions.

As used in this part—

(a) *Locomotive* means a self-propelled unit of equipment designed primarily for moving other equipment. It does not include self-propelled passenger cars.

(b) *Caboose* means a car in a freight train intended to provide transportation for crew members.

(c) *Passenger car* means a unit of rolling equipment intended to provide transportation for members of the general public and includes self-propelled cars designed to carry baggage, mail, express and passengers.

(d) *Yard* is a system of auxiliary tracks used exclusively for the classification of passenger or freight cars according to commodity or destination; assembling of cars for train movement; storage of cars; or repair of equipment.

(e) *Yard locomotive* means a locomotive that is operated only to perform switching functions within a single yard area.

(f) *Yard caboose* means a caboose that is used exclusively in a single yard area.

(g) *Rebuilt locomotive, caboose or passenger car* means a locomotive, caboose

or passenger car that has undergone overhaul which has been identified by the railroad as a capital expense under Interstate Commerce Commission accounting standards.

(h) *Windshield* means the combination of individual units of glazing material of the locomotive, passenger car, or caboose that are positioned in an end facing glazing location.

(i) *End facing glazing location* means any location where a line perpendicular to the plane of the glazing material makes a horizontal angle of 50 degrees or less with the centerline of the locomotive, caboose or passenger car. Any location which, due to curvature of the glazing material, can meet the criteria for either a front facing location or a side facing location shall be considered a front facing location.

(j) *Side facing glazing location* means any location where a line perpendicular to the plane of the glazing material makes an angle of more than 50 degrees with the centerline of the locomotive, caboose or passenger car.

(k) *Certified glazing* means a glazing material that has been certified by the manufacturer as having met the testing requirements set forth in appendix A of this part and that has been installed in such a manner that it will perform its intended function.

(l) *Emergency opening window* means that segment of a side facing glazing location which has been designed to permit rapid and easy removal during a crisis situation.

(m) *Designated service* means exclusive operation of a locomotive under the following conditions;

(1) The locomotive is not used as an independent unit or the controlling unit is a consist of locomotives except when moving for the purpose of servicing or repair within a single yard area;

(2) The locomotive is not occupied by operating or deadhead crews outside a single yard area; and

(3) The locomotive is stenciled ''Designated Service—DO NOT OCCUPY''.

(n) *Locomotive cab* means that portion of the superstructure designed to be occupied by the crew while operating the locomotive.

[44 FR 77352, Dec. 31, 1979; 45 FR 49271, July 24, 1980]

§223.7 Responsibility.

Any person (including a railroad and any manager, supervisor, official, or other employee or agent of a railroad) who violates any requirement of this part or causes the violation of any such requirement is subject to a civil penalty of at least $250 and not more than $10,000 per violation, except that: Penalties may be assessed against individuals only for willful violations, and, where a grossly negligent violation or a pattern of repeated violations has created an imminent hazard of death or injury to persons, or has caused death or injury, a penalty not to exceed $20,000 per violation may be assessed. Each day a violation continues shall constitute a separate offense. See appendix B to this part for a statement of agency civil penalty policy.

[53 FR 28601, July 28, 1988, as amended at 53 FR 52930, Dec. 29, 1988]

Subpart B—Specific Requirements

§223.9 Requirements for new or rebuilt equipment.

(a) Locomotives, including yard locomotives, built or rebuilt after June 30, 1980, must be equipped with certified glazing in all locomotive cab windows.

(b) Cabooses, including yard cabooses, built or rebuilt after June 30, 1980, must be equipped with certified glazing in all windows.

(c) Passenger cars, including self-propelled passenger cars, built or rebuilt after June 30, 1980, must be equipped with certified glazing in all windows and at least four emergency opening windows.

[44 FR 77352, Dec. 31, 1979, as amended at 45 FR 49271, July 24, 1980]

§223.11 Requirements for existing locomotives.

(a) Locomotives, other than yard locomotives, built or rebuilt prior to July 1, 1980, which are equipped in the forward and rearward end facing glazing locations of the locomotive cab windshield with a glazing material that meets the criteria for either portion of the impact testing required for a Type I test under the provisions of appendix A of this part, will not require the installation of certified glazing in the

windshield location except to replace windshield glazing material that is broken or damaged.

(b) Locomotives, other than yard locomotives, built or rebuilt prior to July 1, 1980, which are equipped in all locomotive cab side facing glazing locations with a glazing material that meets the criteria for either portion of the impact testing required for a Type II test under the provisions of appendix A of this part, will not require the installation of certified glazing in the sidefacing glazing location except to replace sidefacing glazing material that is broken or damaged.

(c) Except for yard locomotives and locomotives equipped as described in paragraphs (a) and (b), of this section, locomotives built or rebuilt prior to July 1, 1980, shall be equipped with certified glazing in all locomotive cab windows after June 30, 1984.

(d) Each locomotive subject to the provisions of paragraph (c) of this section which, as a result of an act of vandalism has a locomotive cab window that is broken or damaged so that the window fails to permit good visibility—

(1) Shall be placed in Designated Service within 48 hours of the time of breakage or damage or

(2) Shall be removed from service until equipped with certified glazing in the following manner:

(i) If the broken or damaged window is a part of the windshield of the locomotive cab, all of the forward and rearward end facing glazing locations of the locomotive cab must be replaced with certified glazing.

(ii) If the broken or damaged window is a part of the sidefacing window of the locomotive cab, all of the sidefacing glazing locations of the locomotive cab must be replaced with certified glazing.

(Sec. 209 of the Federal Railroad Safety Act, 94 Stat. 957 (45 U.S.C. 438); sec. 1.49(m) of the regulations of the Office of the Secretary of Transportation, 49 CFR 1.49(m))

[45 FR 49271, July 24, 1980, as amended at 48 FR 24083, May 31, 1983; 48 FR 56956, Dec. 27, 1983]

§ 223.13 Requirements for existing cabooses.

(a) Cabooses, other than yard cabooses, built or rebuilt prior to July 1, 1980, which are equipped in the forward and rearward end facing glazing locations of the windshield with a glazing material that meets the criteria for either portion of the impact testing required for a Type I test under the provisions of appendix A of this part, will not require the installation of certified glazing in the windshield location except to replace windshield glazing material that is broken or damaged.

(b) Cabooses, other than yard cabooses, built or rebuilt prior to July 1, 1980, which are equipped in all side facing glazing locations with a glazing material that meets the criteria for either portion of the impact testing required for a Type II test under the provisions of appendix A of this part, will not require the installation of certified glazing in the sidefacing glazing locations except to replace sidefacing glazing material that is broken or damaged.

(c) Except for yard cabooses and cabooses equipped as described in paragraphs (a) and (b), cabooses built or rebuilt prior to July 1, 1980, shall be equipped with certified glazing in all windows after June 30, 1984.

(d) Each caboose subject to the provision of paragraph (c) of this section, which, as a result of an act of vandalism, has a window that is broken or damaged so that the window fails to permit good visibility shall be equipped with certified glazing in the following manner:

(1) If the broken window is a part of the windshield, all of the forward and rearward end facing glazing locations must be replaced with certified glazing within 30 days of the date of breakage or damage.

(2) If the broken window is a part of the sidefacing window, all of the sidefacing glazing locations must be replaced with certified glazing within 30 days of the date of breakage.

(Sec. 209 of the Federal Railroad Safety Act, 94 Stat. 957 (45 U.S.C. 438); § 1.49(m) of the regulations of the Office of the Secretary of Transportation, 49 CFR 1.49(m))

[44 FR 77352, Dec. 31, 1979, as amended at 48 FR 24083, May 31, 1983; 48 FR 56956, Dec. 27, 1983]

§ 223.15 Requirements for existing passenger cars.

(a) Passenger cars built or rebuilt prior to July 1, 1980, which are equipped in the forward and rearward end facing glazing locations of the windshield with a glazing material that meets the criteria for either portion of the impact testing required for a Type I test under the provisions of appendix A of this part will not require the installation of certified glazing in the windshield location except to replace windshield glazing material that is broken or damaged.

(b) Passenger cars built or rebuilt prior to July 1, 1980, which are equipped in the sidefacing glazing locations with a glazing material that meets the criteria for either portion of the impact testing required for a Type II test under the provisions of appendix A of this part, will not require the installation of certified glazing except to replace sidefacing glazing material that is broken or damaged.

(c) Except for passenger cars described in paragraphs (a) and (b), passenger cars built or rebuilt prior to July 1, 1980, shall be equipped with certified glazing in all windows and a minimum of four emergency windows after June 30, 1984.

(d) Each passenger car subject to the provisions of paragraph (c) of this section which as a result of an act of vandalism, has a window that is broken or damaged so that the window fails to permit good visibility shall be equipped with certified glazing in the following manner:

(1) When the broken window is a part of the windshield, all of the forward and rearward end facing glazing locations shall be replaced with certified glazing within 30 days of breakage.

(2) When the broken window is a part of the sidefacing window, the glazing in that individual sidefacing glazing location shall be replaced with certified glazing within 30 days of the date of breakage.

(Sec. 209 of the Federal Railroad Safety Act, 94 Stat. 957 (45 U.S.C. 438); sec. 1.49(m) of the regulations of the Office of the Secretary of Transportation, 49 CFR 1.49(m))

[44 FR 77352, Dec. 31, 1979, as amended at 48 FR 24083, May 31, 1983; 48 FR 56956, Dec. 27, 1983]

§ 223.17 Identification of equipped locomotives, passenger cars and cabooses.

Each locomotive, passenger car and caboose that is fully equipped with glazing materials that meet the requirements of this part shall be stencilled on an interior wall as follows:

''Fully Equipped FRA Part 223 glazing'' or similar words conveying that meaning in letters at least ⅜ inch high.

[45 FR 49271, July 24, 1980]

APPENDIX A TO PART 223—CERTIFICATION OF GLAZING MATERIALS

As provided in this part, certified glazing materials installed in locomotives, passenger cars, or cabooses must be certified by the glazing manufacturer in accordance with the following procedures:

a. General Requirements

(1) Each manufacturer that provides glazing materials, intended by the manufacturer for use in achieving compliance with the requirements of this part, shall certify that each type of glazing material being supplied for this purpose has been succcessfully tested in accordance with this appendix and that test verification data is available to a railroad or to FRA upon request.

(2) The test verification data shall contain all pertinent original data logs and documentation that the selection of material samples, test set-ups, test measuring devices, and test procedures were performed by qualified personnel using recognized and acceptable practices and in accordance with this appendix.

b. Testing Requirements

(1) The material to be tested (Target Material) shall be a full scale sample of the largest dimension intended to be produced and installed.

(2) The Target Material shall be representative of production material and shall be selected on a documented random choice basis.

(3) The Target Material shall be securely and rigidly attached in a fixture so that the fixture's own characteristics will not induce test errors.

(4) The Target Material so selected and attached shall constitute a Test Specimen.

(5) The Test Specimen will then be equipped with a Witness Plate that shall be mounted parallel to and at a distance of six inches in back of the Target Material. The Witness Plate shall have at least an area which will cover the full map of the Target Material.

(6) The Witness Plate shall be an unbacked sheet of maximum 0.006 inch, alloy 1100 temper O, aluminum stretched within the perimeter of a suitable frame to provide a taut surface.

(7) The Test Specimen will be positioned so that the defined projectile impacts it at an angle of 90 degrees to the Test Specimen surface.

(8) The point of impact of the defined projectile will be within a radius of 3″ of the centroid of the Target Material.

(9) Velocity screens or other suitable velocity measuring devices will be positioned so as to measure the impact velocity of the defined projectile within a 10% accuracy tolerance, with test modifications made to guarantee that the stipulated minimum velocity requirements are met.

(10) The Test Specimen for glazing material that is intended for use in end facing glazing locations shall be subjected to a Type I test regimen consisting of the following tests:

(i) Ballistic Impact in which a standard 22 caliber long rifle lead bullet of 40 grains in weight impacts at a minimum of 960 feet per second velocity.

(ii) Large Object Impact in which a cinder block of 24 lbs minimum weight with dimensions of 8 inches by 8 inches by 16 inches nominally impacts at the corner of the block at a minimum of 44 feet per second velocity. The cinder block must be of composition referenced in American Society for Testing and Materials (ASTM) Specification C33L or ASTM C90.

(11) The Test Specimen for glazing material that is intended for use only in side facing glazing locations shall be subjected to a Type II test regimen consisting of the following tests:

(i) Ballistic Impact in which a standard 22 caliber long rifle lead bullet of 40 grains in weight impacts at a minimum of 960 feet per second velocity.

(ii) Large Object Impact in which a cinder block of 24 lbs minimum weight with dimensions of 8 inches by 8 inches by 16 inches nominally impacts at the corner of the block at a minimum of 12 feet per second velocity. The cinder block must be of the composition referenced in ASTM C33L or ASTM C90.

(12) Three different test specimens must be subjected to the ballistic impact portion of these tests.

(13) Two different test specimens must be subjected to the large object impact portion of these tests.

(14) A material so tested must perform so that:

(i) there shall be no penetration of the back surfaces (side closest to Witness Plate) of the Target Material by the projectile. Partial penetration of the impact (front) surface of the Target Material does not constitute a failure; and

(ii) there shall be no penetration of particles from the back side of the Target Material through the back side of the prescribed Witness Plate.

(15) Test specimens must consecutively pass the required number of tests at the required minimum velocities. Individual tests resulting in failures at greater than the required minimum velocities may be repeated but a failure of an individual test at less than the minimum velocity shall result in termination of the total test and failure of the material.

(16) After successful completion of the prescribed set of required consecutive tests, a manufacturer may certify in writing that a particular glazing material meets the requirements of these standards.

c. Material Identification

(1) Each individual unit of glazing material shall be permanently marked, prior to installation, to indicate that this type of material has been successfully tested as set forth in this appendix and that marking shall be done in such a manner that it is clearly visible after the material has been installed.

(2) Each individual unit of a glazing material that has successfully passed the Type I testing regimen shall be marked to indicate:

(i) ''FRA Type I'' material;

(ii) the manufacturer of the material;

(iii) the type or brand identification of the material.

(3) Each individual unit of a glazing material that has successfully passed the Type II testing regimen shall be marked to indicate:

(i) ''FRA Type II'' material;

(ii) the manufacturer of the material;

(iii) the type or brand identification of the material.

APPENDIX B TO PART 223—SCHEDULE OF CIVIL PENALTIES [1]

Section	Violation	Willful violation
223.9 New or rebuilt equipment:		
(a) Locomotives	$2,500	$5,000
(b) Cabooses	2,500	5,000
(c) Passenger cars	2,500	5,000
223.11(c) Existing locomotives	2,500	5,000
(d) repair of window	1,000	2,000
223.13(c) Existing cabooses	2,500	5,000
(d) Repair of window	1,000	2,000
223.15(c) Existing passenger cars	2,500	5,000
(d) repair of window	1,000	2,000
223.17 Identification of units	500	1,000

[1] A penalty may be assessed against an individual only for a willful violation. The Administrator reserves the right to assess a penalty of up to $20,000 for any violation where circumstances warrant. See 49 CFR part 209, appendix A.

[53 FR 52930, Dec. 29, 1988]

PART 225—RAILROAD ACCIDENTS/INCIDENTS: REPORTS CLASSIFICATION, AND INVESTIGATIONS

Sec.
225.1 Purpose.
225.3 Applicability.
225.5 Definitions.
225.7 Public examination and use of reports.
225.9 Telephonic reports of certain accidents/incidents.
225.11 Reporting of accidents/incidents.
225.12 Rail Equipment Accident/Incident Reports alleging employee human factor as cause; Employee Human Factor attachment; notice to employee; employee supplement.
225.13 Late reports.
225.15 Accidents/incidents not to be reported.
225.17 Doubtful cases; alcohol or drug involvement.
225.19 Primary groups of accidents/incidents.
225.21 Forms.
225.23 Joint operations.
225.25 Recordkeeping.
225.27 Retention of records.
225.29 Penalties.
225.31 Investigations.
225.33 Internal Control Plans.
225.35 Access to records and reports.
225.37 Magnetic media transfer and electronic submission.
APPENDIX A TO PART 225—SCHEDULE OF CIVIL PENALTIES
APPENDIX B TO PART 225—PROCEDURE FOR DETERMINING REPORTING THRESHOLD

AUTHORITY: 49 U.S.C. 20103, 20107, 20901, 20902, 21302, 21311; 49 U.S.C. 103; 49 CFR 1.49(c), (g), and (m).

SOURCE: 39 FR 43224, Dec. 11, 1974, unless otherwise noted.

§225.1 Purpose.

The purpose of this part is to provide the Federal Railroad Administration with accurate information concerning the hazards and risks that exist on the Nation's railroads. FRA needs this information to effectively carry out its regulatory responsibilities under 49 U.S.C. chapters 201–213. FRA also uses this information for determining comparative trends of railroad safety and to develop hazard elimination and risk reduction programs that focus on preventing railroad injuries and accidents. Issuance of these regulations under the federal railroad safety laws and regulations preempts States from prescribing accident/incident reporting requirements. Any State may, however, require railroads to submit to it copies of accident/incident and injury/illness reports filed with FRA under this part, for accidents/incidents and injuries/illnesses which occur in that State.

[61 FR 30967, June 18, 1996]

§225.3 Applicability.

(a) Except as provided in paragraphs (b), (c), and (d), this part applies to all railroads except—

(1) A railroad that operates freight trains only on track inside an installation which is not part of the general railroad system of transportation or that owns no track except for track that is inside an installation that is not part of the general railroad system of transportation and used for freight operations.

(2) Rail mass transit operations in an urban area that are not connected with the general railroad system of transportation.

(3) A railroad that exclusively hauls passengers inside an installation that is insular or that owns no track except for track used exclusively for the hauling of passengers inside an installation that is insular. An operation is not considered insular if one or more of the following exists on its line:

(i) A public highway-rail grade crossing that is in use;

(ii) An at-grade rail crossing that is in use;

(iii) A bridge over a public road or waters used for commercial navigation; or

(iv) A common corridor with a railroad, *i.e.*, its operations are within 30 feet of those of any railroad.

(b) The Internal Control Plan requirements in §225.33(a)(3) through (10) do not apply to—

(1) Railroads that operate or own track on the general railroad system of transportation that have 15 or fewer employees covered by the hours of service law (49 U.S.C. 21101–21107) and

(2) Railroads that operate or own track exclusively off the general system.

(c) The recordkeeping requirements regarding accountable injuries and illnesses and accountable rail equipment accidents/incidents found in §225.25(a) through (g) do not apply to—

(1) Railroads that operate or own track on the general railroad system of transportation that have 15 or fewer employees covered by the hours of service law (49 U.S.C. 21101–21107) and

(2) Railroads that operate or own track exclusively off the general system.

(d) All requirements in this part to record or report an injury or illness incurred by any classification of person that results from a non-train incident do not apply to railroads that operate or own track exclusively off the general railroad system of transportation, unless the non-train incident involves in- service on-track equipment.

[61 FR 30967, June 18, 1996, as amended at 61 FR 67490, Dec. 23, 1996]

§ 225.5 Definitions.

As used in this part—

Accident/incident means:

(1) Any impact between railroad on-track equipment and an automobile, bus, truck, motorcycle, bicycle, farm vehicle or pedestrian at a highway-rail grade crossing;

(2) Any collision, derailment, fire, explosion, act of God, or other event involving operation of railroad on-track equipment (standing or moving) that results in reportable damages greater than the current reporting threshold to railroad on-track equipment, signals, track, track structures, and roadbed;

(3) Any event arising from the operation of a railroad which results in:

(i) Death to any person;

(ii) Injury to any person that requires medical treatment;

(iii) Injury to a railroad employee that results in:

(A) A day away from work;

(B) Restricted work activity or job transfer; or

(C) Loss of consciousness; or

(4) Occupational illness.

Accountable injury or illness means any condition, not otherwise reportable, of a railroad worker that is associated with an event, exposure, or activity in the work environment that causes or requires the worker to be examined or treated by a qualified health care professional. Such treatment would usually occur at a location other than the work environment; however, it may be provided at any location, including the work site.

Accountable rail equipment accident/incident means any event not otherwise reportable, involving the operation of on-track equipment that causes physical damage to either the on-track equipment or the track upon which such equipment was operated and that requires the removal or repair of rail equipment from the track before any rail operations over the track can continue. An accountable rail equipment accident/incident, if not tended to, thus would disrupt railroad service. Examples of ''disruption of service'' would include: loss of main track; one or more derailed wheels; any train failing to arrive or depart at its scheduled time; one or more cars or locomotives taken out of service; or rerouting trains due to a damaged car or locomotive.

Arising from the operation of a railroad includes all activities of a railroad that are related to the performance of its rail transportation business.

Day away from work is any day subsequent to the day of the injury or diagnosis of occupational illness that a railroad employee does not report to work for reasons associated with his or her condition.

Day of restricted work activity is any day that a employee is restricted in his or her job following the day of the injury or diagnosis of occupational illness.

Employee human factor includes any of the accident causes signified by the train accident cause codes listed under ''Train Operation—Human Factors'' in the current ''FRA Guide for Preparing Accidents/Incidents Reports,'' except for those train accident cause codes pertaining to non-railroad workers. For purposes of this definition ''employee'' includes the classifications of Worker on Duty—Employee, Employee not on Duty, Worker on Duty—Contractor, and Worker on Duty—Volunteer.

Establishment means a single physical location where workers report to work, where railroad business is conducted, or where services or operations are performed. Examples are: a division office, general office, repair or maintenance

facility, major switching yard or terminal. For employees who are engaged in dispersed operations, such as signal or track maintenance workers, an ''establishment'' is typically a location where work assignments are initially made and oversight responsibility exists, *e.g.*, the establishment where the signal supervisor or roadmaster is located.

FRA representative means the Associate Administrator for Safety, FRA; the Associate Administrator's delegate (including a qualified State inspector acting under part 212 of this chapter); the Chief Counsel, FRA; or the Chief Counsel's delegate.

Highway-rail grade crossing means a location where a public highway, road, street, or private roadway, including associated sidewalks and pathways, crosses one or more railroad tracks at grade.

Joint operations means rail operations conducted on a track used jointly or in common by two or more railroads subject to this part or operation of a train, locomotive, car, or other on-track equipment by one railroad over the track of another railroad.

Medical treatment includes any medical care or treatment beyond ''first aid'' regardless of who provides such treatment. Medical treatment does not include diagnostic procedures, such as X-rays and drawing blood samples. Medical treatment also does *not* include preventive emotional trauma counseling provided by the railroad's employee counseling and assistance officer *unless* the participating worker has been diagnosed as having a mental disorder that was significantly caused or aggravated by an accident/incident and this condition requires a regimen of treatment to correct.

Non-train incident means an event that results in a reportable casualty, but does not involve the movement of on-track equipment nor cause reportable damage above the threshold established for train accidents.

Occupational illness means any abnormal condition or disorder, of any person who falls under the definition for the classifications of Worker on Duty—Employee, Worker on Duty—Contractor, or Worker on Duty—Volunteer, other than one resulting from injury, caused by environmental factors associated with the person's railroad employment, including, but not limited to, acute or chronic illnesses or diseases that may be caused by inhalation, absorption, ingestion, or direct contact.

Person includes all categories of entities covered under 1 U.S.C. 1, including, but not limited to, a railroad; any manager, supervisor, official, or other employee or agent of a railroad; any owner, manufacturer, lessor, or lessee of railroad equipment, track, or facilities; any passenger; any trespasser or nontrespasser; any independent contractor providing goods or services to a railroad; any volunteer providing goods or services to a railroad; and any employee of such owner, manufacturer, lessor, lessee, or independent contractor.

Qualified health care professional is a health care professional operating within the scope of his or her license, registration, or certification. For example, an otolaryngologist is qualified to diagnose a case of noise-induced hearing loss and identify potential causal factors, but may not be qualified to diagnose a case of repetitive motion injuries. In addition to licensed physicians, the term *qualified health care professional* includes members of other occupations associated with patient care and treatment such as chiropractors, podiatrists, physician's assistants, psychologists, and dentists.

Railroad means a person providing railroad transportation.

Railroad transportation means any form of non-highway ground transportation that run on rails or electro-magnetic guideways, including commuter or other short-haul railroad passenger service in a metropolitan or suburban area, as well as any commuter railroad service that was operated by the Consolidated Rail Corporation as of January 1, 1979, and high speed ground transportation systems that connect metropolitan areas, without regard to whether they use new technologies not associated with traditional railroads. Such term does not include rapid transit operations within an urban area that are not connected to the general railroad system of transportation.

Train accident means any collision, derailment, fire, explosion, act of God, or other event involving operation of railroad on-track equipment (standing or moving) that results in damages greater than the current reporting threshold to railroad on-track equipment, signals, track, track structures, and roadbed.

Train incident means any event involving the movement of on-track equipment that results in a reportable casualty but does not cause reportable damage above the current threshold established for train accidents.

Work environment is the physical location, equipment, materials processed or used, and activities of a railroad employee associated with his or her work, whether on or off the railroad's property.

Work related means related to any incident, activity, exposure, or the like occurring within the work environment.

[61 FR 30968, June 18, 1996, as amended at 61 FR 59371, Nov. 22, 1996; 61 FR 67490, Dec. 23, 1996]

§ 225.7 Public examination and use of reports.

(a) Accident/Incident reports made by railroads in compliance with these rules shall be available to the public in the manner prescribed by part 7 of this title. Accident/Incident reports may be inspected at the Office of Safety, Federal Railroad Administration, 400 Seventh Street, SW., Washington, DC 20590. Written requests for a copy of a report should be addressed to the Freedom of Information Officer, Office of Chief Counsel, FRA, 400 Seventh Street, SW., Washington, DC 20590, and be accompanied by the appropriate fee prescribed in part 7 of this title. To facilitate expedited handling, each request should be clearly marked ''Request for Accident/Incident Report.''

(b) 49 U.S.C. 20903 provides that monthly reports filed by railroads under § 225.11 may not be admitted as evidence or used for any purpose in any action for damages growing out of any matters mentioned in these monthly reports. The Employee Human Factor Attachment, Notice, and Employee Supplement under § 225.12 are part of the reporting railroad's accident report to FRA pursuant to the 49 U.S.C. 20901 and, as such, shall not ''be admitted as evidence or used for any purpose in any suit or action for damages growing out of any matter mentioned in said report * * *.'' 49 U.S.C. 20903.

[39 FR 43224, Dec. 11, 1974, as amended at 51 FR 47019, Dec. 30, 1986; 53 FR 28601, July 28, 1988; 55 FR 37827, Sept. 13, 1990; 55 FR 52487, Dec. 21, 1990; 61 FR 30969, June 18, 1996]

§ 225.9 Telephonic reports of certain accidents/incidents.[1, 2]

(a) Each railroad must report immediately by toll free telephone, Area Code 800–424–0201, whenever it learns of the occurrence of an accident/incident arising from the operation of the railroad that results in the:

(1) Death of rail passenger or employee; or

(2) Death or injury of five or more persons.

(b) Each report must state the:

(1) Name of the railroad;

(2) Name, title, and telephone number of the individual making the report;

(3) Time, date, and location of accident/incident;

(4) Circumstances of the accident/incident; and

(5) Number of persons killed or injured.

[39 FR 43224, Dec. 11, 1974, as amended at 41 FR 15847, Apr. 15, 1976; 49 FR 48939, Dec. 17, 1984]

§ 225.11 Reporting of accidents/incidents.

Each railroad subject to this part shall submit to FRA a monthly report of all railroad accidents/incidents described in § 225.19. The report shall be made on the forms prescribed in § 225.21 in hard copy or, alternatively, by means of magnetic media or electronic submission, as prescribed in § 225.37, and shall be submitted within 30 days

[1] The National Transportation Safety Board requires certain railroad accidents to be reported by telephone at the same toll free number (See Title 49, Code of Federal Regulations Part 840).

[2] FRA Locomotive Safety Standards require certain locomotive accidents to be reported by telephone at the same toll free number (See Title 49, Code of Federal Regulations, § 229.17.)

after expiration of the month during which the accidents/incidents occurred. Reports shall be completed as required by the current ''FRA Guide for Preparing Accidents/Incidents Reports.'' A copy of this guide may be obtained from the Office of Safety, RRS–22, Federal Railroad Administration, 400 Seventh Street, S.W., Washington, D.C. 20590.

[61 FR 30969, June 18, 1996]

§ 225.12 Rail Equipment Accident/Incident Reports alleging employee human factor as cause; Employee Human Factor Attachment; notice to employee; employee supplement.

(a) *Rail Equipment Accident/Incident Report alleging employee human factor as cause; completion of Employee Human Factor Attachment.* If, in reporting a rail equipment accident/incident to FRA, a railroad cites an employee human factor as the primary cause or a contributing cause of the accident; then the railroad that cited such employee human factor must complete, in accordance with instructions on the form and in the current ''FRA Guide for Preparing Accident/Incident Reports,'' an Employee Human Factor Attachment form on the accident. For purposes of this section, ''employee'' is defined as a Worker on Duty—Employee, Employee not on Duty, Worker on Duty—Contractor, or Worker on Duty—Volunteer.

(b) *Notice to identified implicated employees.* Except as provided in paragraphs (e) and (f) of this section, for each employee whose act, omission, or physical condition was alleged by the railroad as the employee human factor that was the primary cause or a contributing cause of a rail equipment accident/incident and whose name was listed in the Employee Human Factor Attachment for the accident and for each such railroad employee of whose identity the railroad has actual knowledge, the alleging railroad shall—

(1) Complete part I, ''Notice to Railroad Employee Involved in Rail Equipment Accident/Incident Attributed to Employee Human Factor,'' of Form FRA F 6180.78 with information regarding the accident, in accordance with instructions on the form and in the current ''FRA Guide for Preparing Accident/Incident Reports''; and

(2) Hand deliver or send by first class mail (postage prepaid) to that employee, within 45 days after the end of the month in which the rail equipment accident/incident occurred—

(i) A copy of Form FRA F 6180.78, ''Notice to Railroad Employee Involved in Rail Equipment Accident/Incident Attributed to Employee Human Factor; Employee Statement Supplementing Railroad Accident Report,'' with part I completed as to the applicable employee and accident;

(ii) A copy of the railroad's Rail Equipment Accident/Incident Report and Employee Human Factor Attachment on the rail equipment accident/incident involved; and

(iii) If the accident was also reportable as a highway-rail grade crossing accident/incident, a copy of the railroad's Highway-Rail Grade Crossing Accident/Incident Report on that accident.

(c) *Joint operations.* If a reporting railroad makes allegations under paragraph (a) of this section concerning the employee of another railroad, the employing railroad must promptly provide the name, job title, address, and medical status of any employee reasonably identified by the alleging railroad, if requested by the alleging railroad.

(d) *Late identification.* Except as provided in paragraphs (e) and (f) of this section, if a railroad is initially unable to identify a particular railroad employee whose act, omission, or physical condition was cited by the railroad as a primary or contributing cause of the accident, but subsequently makes such identification, the railroad shall submit a revised Employee Human Factor Attachment to FRA immediately, and shall submit the Notice described in paragraph (b) of this section to that employee within 15 days of when the revised report is to be submitted.

(e) *Deferred notification on medical grounds.* The reporting railroad has reasonable discretion to defer notification of implicated employees on medical grounds.

(f) *Implicated employees who have died by the time that the Notice is ready to be sent.* (1) If an implicated employee has

died as a result of the accident, a Notice under paragraph (b) addressed to that employee must not be sent to any person.

(2) If an implicated employee has died of whatever causes by the time that the Notice is ready to be sent, no Notice addressed to that employee is required.

(g) *Employee Statement Supplementing Railroad Accident Report (Supplements or Employee Supplements).* (1) Employee Statements Supplementing Railroad Accident Reports are voluntary, not mandatory; nonsubmission of a Supplement does not imply that the employee admits or endorses the railroad's conclusions as to cause or any other allegations.

(2) Although a Supplement is completely optional and not required, if an employee wishes to submit a Supplement and assure that, after receipt, it will be properly placed by FRA in a file with the railroad's Rail Equipment Accident/Incident Report and that it will be required to be reviewed by the railroad that issued the Notice, the Supplement must be made on part II of Form FRA F 6180.78 (entitled ''Notice to Railroad Employee Involved in Rail Equipment Accident/Incident Attributed to Employee Human Factor; Employee Statement Supplementing Railroad Accident Report''), following the instructions printed on the form. These instructions require that, within 35 days of the date that the Notice was hand delivered or sent by first class mail (postage prepaid) to the employee (except for good cause shown), the original of the Supplement be filed with FRA and a copy be hand delivered or sent by first class mail (postage prepaid) to the railroad that issued the Notice so that the railroad will have an opportunity to reassess its reports to FRA concerning the accident.

(3) Information that the employee wishes to withhold from the railroad must not be included in this Supplement. If an employee wishes to provide confidential information to FRA, the employee should not use the Supplement form (part II of Form FRA F 6180.78), but rather provide such confidential information by other means, such as a letter to the employee's collective bargaining representative, or to the Federal Railroad Administration, Office of Safety Assurance and Compliance, RRS–11, 400 Seventh Street, SW., Washington, DC 20590. The letter should include the name of the railroad making the allegations, the date and place of the accident, and the rail equipment accident/incident number.

(h) *Willful false statements; penalties.* If an employee chooses to submit a Supplement to FRA, all of the employee's assertions in the Supplement must be true and correct to the best of the employee's knowledge and belief.

(1) Under 49 U.S.C. 21301, 21302, and 21304, any person who willfully files a false Supplement with FRA is subject to a civil penalty. See appendix A to this part.

(2) Any person who knowingly and willfully files a false Supplement is subject to a $5,000 fine, or up to two years'' imprisonment, or both, under 49 U.S.C. 21311.

[55 FR 37827, Sept. 13, 1990; 55 FR 39538, Sept. 27, 1990, as amended at 61 FR 30969, 30973, June 18, 1996]

§ 225.13 Late reports.

Whenever a railroad discovers that a report of an accident/incident, through mistake or otherwise, has been improperly omitted from or improperly reported on its regular monthly accident/incident report, a report covering this accident/incident together with a letter of explanation must be submitted immediately. Whenever a railroad receives a partially or fully completed Employee Statement Supplementing Railroad Accident Report (part II of Form FRA F 6180.78), in response to a Notice to Railroad Employee (part I of Form FRA F 6180.78) issued by the railroad and mailed or hand delivered to the employee, the railroad must promptly review that Supplement; based on that review, reassess the accuracy and validity of the railroad's Rail Equipment Accident/Incident Report and of any other reports and records required by this part concerning the same accident, including the Employee Human Factor Attachment; make all justified revisions to each of those reports and records; submit any amended reports to FRA; and submit a copy of any amended Rail Equipment Accident/Incident Report, Employee

Human Factor Attachment, and Highway-Rail Grade Crossing Accident/Incident Report on the accident to the employee. A second notice under §225.12 is not required for the employee. If an employee who was never sent a notice under §225.12 for that accident is implicated in the revised Employee Human Factor Attachment, the railroad must follow the procedures of §225.12(d).

[39 FR 43224, Dec. 11, 1974, as amended at 55 FR 37828, Sept. 13, 1990; 61 FR 30973, June 18, 1996]

§225.15 Accidents/incidents not to be reported.

A railroad need not report:

(a) Casualties which occur at highway-rail grade crossings that do not involve the presence or operation of on-track equipment, or the presence of railroad employees then engaged in the operation of a railroad;

(b) Casualties in or about living quarters not arising from the operation of a railroad;

(c) Suicides as determined by a coroner or other public authority; or

(d) Attempted suicides.

[39 FR 43224, Dec. 11, 1974, as amended at 61 FR 30973, June 18, 1996]

§225.17 Doubtful cases; alcohol or drug involvement.

(a) The reporting officer of a railroad will ordinarily determine the reportability or nonreportability of an accident/incident after examining all evidence available. The FRA, however, cannot delegate authority to decide matters of judgment when facts are in dispute. In all such cases the decision shall be that of the FRA.

(b) Even though there may be no witness to an accident/incident, if there is evidence indicating that a reportable accident/incident may have occurred, a report of that accident/incident must be made.

(c) All accidents/incidents reported as ''claimed but not admitted by the railroad'' are given special examination by the FRA, and further inquiry may be ordered. Accidents/incidents accepted as reportable are tabulated and included in the various statistical statements issued by the FRA. The denial of any knowledge or refusal to admit responsibility by the railroad does not exclude those accidents/incidents from monthly and annual figures. Facts stated by a railroad that tend to refute the claim of an injured person are given consideration, and when the facts seem sufficient to support the railroad's position, the case is not allocated to the reporting railroad.

(d)(1) In preparing a Rail Equipment Accident/Incident Report under this part, the railroad shall make such specific inquiry as may be reasonable under the circumstances into the possible involvement of alcohol or drug use or impairment in such accident or incident. If the railroad comes into possession of any information whatsoever, whether or not confirmed, concerning alleged alcohol or drug use or impairment by an employee who was involved in, or arguably could be said to have been involved in, the accident/incident, the railroad shall report such alleged use or impairment as provided in the current FRA Guide for Preparing Accident/Incident Reports. If the railroad is in possession of such information but does not believe that alcohol or drug impairment was the primary or contributing cause of the accident/incident, then the railroad shall include in the narrative statement of such report a brief explanation of the basis of such determination.

(2) For any train accident within the requirement for post-accident testing under §219.201 of this title, the railroad shall append to the Rail Equipment Accident/Incident Report any report required by §219.209(b) (pertaining to failure to obtain samples for post-accident toxicological testing).

(3) For any train or non-train incident, the railroad shall provide any available information concerning the possible involvement of alcohol or drug use or impairment in such accident or incident.

(4) In providing information required by this paragraph, a railroad shall not disclose any information concerning use of controlled substances determined by the railroad's Medical Review Officer to have been consistent with 49 CFR 219.103.

[39 FR 43224, Dec. 11, 1974, as amended at 50 FR 31579, Aug. 2, 1985; 54 FR 53279, Dec. 27, 1989]

§ 225.19 Primary groups of accidents/incidents.

(a) For reporting purposes reportable railroad accidents/incidents are divided into three groups:

Group I—Highway-Rail Grade Crossing;
Group II—Rail Equipment;
Group III—Death, Injury and Occupational Illness.

(b) *Group I—Highway-rail grade crossing.* Each highway-rail grade crossing accident/incident must be reported to the FRA on Form FRA F 6180.57, regardless of the extent of damages or whether a casualty occurred. In addition, whenever a highway-rail grade crossing accident/incident results in damages greater than the current reporting threshold to railroad on-track equipment, signals, track, track structures, or roadbed, that accident/incident shall be reported to the FRA on Form FRA F 6180.54. For reporting purposes, damages include labor costs and all other costs to repair or replace in kind damaged on-track equipment, signals, track, track structures, or roadbed, but do not include the cost of clearing a wreck.

(c) *Group II—Rail Equipment.* Rail equipment accidents/incidents are collisions, derailments, fires, explosions, acts of God, or other events involving the operation of railroad on-track equipment, signals, track, track equipment (standing or moving) that result in damages greater than the current reporting threshold (*i.e.* $6,300 for calendar years 1991 through 1996 and $6,500 for calendar year 1997) to railroad on-track equipment, signals, tracks, track structures, or roadbed, including labor costs and the costs for acquiring new equipment and material. Each rail equipment accident/incident must be reported to the FRA on Form FRA F 6180.54. If the property of more than one railroad is involved in an accident/incident, the reporting threshold is calculated by including the damages suffered by all of the railroads involved. See § 225.23, Joint Operations. The reporting threshold will be reviewed periodically and will be adjusted every year.

(d) *Group III—Death, injury, or occupational illness.* Each event arising from the operation of a railroad shall be reported on Form FRA F 6180.55a if it results in:

(1) Death to any person;

(2) Injury to any person that requires medical treatment;

(3) Injury to a railroad employee that results in:

(i) A day away from work;

(ii) Restricted work activity or job transfer; or

(iii) Loss of consciousness; or

(4) Occupational illness of a railroad employee.

(e) The accident/incident reporting threshold for calendar years 1991 through 1996 is $6,300. This threshold dollar amount will remain in effect until December 31, 1996. For calendar year 1997 the accident/incident reporting threshold is $6,500. The procedure for determining the reporting threshold for calendar year 1997 appears as appendix B to this part 225.

(Secs. 11144 and 11145, Subtitle IV of Title 49 (49 U.S.C. 11144 and 11145); secs. 1 and 6, Accident Reports Act (45 U.S.C. 431 and 437); sec. 6(e) and (f), Department of Transportation Act (49 U.S.C. 1655(e) and (f)); sec. 1.49(g) and (m), regulations of the Office of the Secretary of Transportation (49 CFR 1.49(g) and (m))

[39 FR 43224, Dec. 11, 1974, as amended at 41 FR 50691, Nov. 17, 1976; 42 FR 1221, Jan. 6, 1977; 47 FR 56358, Dec. 16, 1982; 51 FR 47019, Dec. 30, 1986; 53 FR 48548, Dec. 1, 1988; 55 FR 52847, Dec. 21, 1990; 61 FR 30969, 30973, June 18, 1996; 61 FR 60634, Nov. 29, 1996; 61 FR 67490, Dec. 23, 1996]

§ 225.21 Forms.

The following forms and copies of the FRA Guide for Preparing Accident/Incident Reports may be obtained from the Office of Safety, FRA, 400 Seventh Street, SW., Washington, DC 20590.

(a) *Form FRA F 6180.54—Rail Equipment Accident/Incident Report.* Form FRA F 6180.54 shall be used to report each reportable rail equipment accident/incident which occurred during the preceding month.

(b) *Form FRA F 6180.55—Railroad Injury and Illness Summary.* Form FRA F 6180.55 must be filed each month, even though no reportable accident/incident occurred during the month covered. Each report must include an oath or verification, made by the proper officer of the reporting railroad, as provided

for attestation on the form. If no reportable accident/incident occurred during the month, that fact must be stated on this form. All railroads subject to this part, shall show on this form the total number of freight train miles, passenger train miles, yard switching train miles, and other train miles run during the month.

(c) *Form FRA 6180.55a—Railroad Injury and Illness (Continuation Sheet).* Form FRA 6180.55a shall be used to report all reportable fatalities, injuries and occupational illnesses that occurred during the preceding month.

(d) *Form FRA 6180.56—Annual Railroad Report of Manhours by State.* Form FRA 6180.56 shall be submitted as part of the monthly Railroad Injury and Illness Summary (Form FRA F 6180.55) for the month of December of each year.

(e) *Form FRA F 6180.57—Highway-Rail Grade Crossing Accident/Incident Report.* Form FRA F 6180.57 shall be used to report each highway-rail grade crossing accident/incident which occurred during the preceding month.

(f) *Form FRA F 6180.81—Employee Human Factor Attachment.* Form FRA F 6180.81 shall be used by railroads, as a supplement to the Rail Equipment Accident/Incident Report (Form FRA F 6180.54), in reporting rail equipment accidents/incidents that they attribute to an employee human factor. This form shall be completed in accordance with instructions printed on the form and in the current ''FRA Guide for Preparing Accident/Incident Reports.'' The form shall be attached to the Rail Equipment Accident/Incident Report and shall be submitted within 30 days after expiration of the month in which the accident/incident occurred.

(g) *Form FRA F 6180.78—Notice to Railroad Employee Involved in Rail Equipment Accident/Incident Attributed to Employee Human Factor; Employee Statement Supplementing Railroad Accident Report.* When a railroad alleges, in the Employee Human Factor Attachment to a Rail Equipment Accident/Incident Report, that the act, omission, or physical condition of a specific employee was a primary or contributing cause of the rail equipment accident/incident, the railroad shall complete part I of Form FRA F 6180.78 to notify each such employee identified that the railroad has made such allegation and that the employee has the right to submit a statement to FRA. The railroad shall then submit the entire form, parts I and II, to the employee. The Employee Statement Supplementing Railroad Accident Report (Employee Supplement) is completely at the option of the employee; however, if the employee desires to make a statement about the accident that will become part of the railroad's Rail Equipment Accident/Incident Report, the employee shall complete the Employee Supplement form (part II of Form FRA F 6180.78) and shall then submit the original of the entire form, parts I and II, and any attachments, to FRA and submit a copy of the same to the railroad that issued the Notice in part I.

(h) *Form FRA F 6180.98—Railroad Employee Injury and/or Illness Record.* Form FRA F 6180.98 or an alternative railroad-designed record shall be used by the railroads to record all reportable and accountable injuries and illnesses to railroad employees for each establishment. This record shall be completed and maintained in accordance with the requirements set forth in §225.25.

(i) *Form FRA F 6180.97—Initial Rail Equipment Accident/Incident Record.* Form FRA F 6180.97 or an alternative railroad-designed record shall be used by the railroads to record all reportable and accountable rail equipment accidents/incidents for each establishment. This record shall be completed and maintained in accordance with the requirements set forth in §225.25.

[39 FR 43224, Dec. 11, 1974, as amended at 42 FR 1221, Jan. 6, 1977; 49 FR 48939, Dec. 17, 1984; 55 FR 37828, Sept. 13, 1990; 61 FR 30969, 30973, June 18, 1996]

§225.23 Joint operations.

(a) Any reportable death or injury to an employee arising from an accident/incident involving joint operations must be reported on Form FRA F 6180.55a by the employing railroad.

(b) In all cases involving joint operations, each railroad must report on Form FRA F 6180.55a the casualties to all persons on its train or other on-track equipment. Casualties to railroad employees must be reported by the employing railroad regardless of whether

the employees were on or off duty. Casualties to all other persons not on trains or on-track equipment must be reported on Form FRA F 6180.55a by the railroad whose train or equipment is involved. Any person found unconscious or dead, if such condition arose from the operation of a railroad, on or adjacent to the premises or right-of-way of the railroad having track maintenance responsibility must be reported by that railroad on Form FRA F 6180.55a.

(c) In rail equipment accident/incident cases involving joint operations, the railroad responsible for carrying out repairs to, and maintenance of, the track on which the accident/incident occurred, and any other railroad directly involved in the accident/incident, each must report the accident/incident on Form FRA F 6180.54.

[39 FR 43224, Dec. 11, 1974, as amended at 42 FR 1221, Jan. 6, 1977]

§ 225.25 Recordkeeping.

(a) Each railroad shall maintain either the Railroad Employee Injury and/or Illness Record (Form FRA F 6180.98) or an alternative railroad-designed record as described in paragraph (b) of this section of all reportable and accountable injuries and illnesses of its employees that arise from the operation of the railroad for each railroad establishment where such employees report to work, including, but not limited to, an operating division, general office, and major installation such as a locomotive or car repair or construction facility.

(b) The alternative railroad-designed record may be used in lieu of the Railroad Employee Injury and/or Illness Record (Form FRA F 6180.98) described in paragraph (a) of this section. Any such alternative record shall contain all of the information required on the Railroad Employee Injury and/or Illness Record. Although this information may be displayed in a different order from that on the Railroad Employee Injury and/or Illness Record, the order of the information shall be consistent from one such record to another such record. The order chosen by the railroad shall be consistent for each of the railroad''s reporting establishments. Railroads may list additional information on the alternative record beyond the information required on the Railroad Employee Injury and/or Illness Record. The alternative record shall contain, at a minimum, the following information:

(1) Name of railroad;

(2) Case/incident number;

(3) Full name of railroad employee;

(4) Date of birth of railroad employee;

(5) Gender of railroad employee;

(6) Social security number of railroad employee;

(7) Date the railroad employee was hired;

(8) Home address of railroad employee; include the street address, city, State, ZIP code, and home telephone number with area code;

(9) Name of facility where railroad employee normally reports to work;

(10) Address of facility where railroad employee normally reports to work; include the street address, city, State, and ZIP code;

(11) Job title of railroad employee;

(12) Department assigned;

(13) Specific site where accident/incident/exposure occurred; include the city, county, State, and ZIP code;

(14) Date and time of occurrence; military time or AM/PM;

(15) Time employee's shift began; military time or AM/PM;

(16) Whether employee was on premises when injury occurred;

(17) Whether employee was on or off duty;

(18) Date and time when employee notified company personnel of condition; military time or AM/PM;

(19) Name and title of railroad official notified;

(20) Description of the general activity this employee was engaged in prior to the injury/illness/condition;

(21) Description of all factors associated with the case that are pertinent to an understanding of how it occurred. Include a discussion of the sequence of events leading up to it; and the tools, machinery, processes, material, environmental conditions, etc., involved;

(22) Description, in detail, of the injury/illness/condition that the employee sustained, including the body parts affected. If a recurrence, list the date of the last occurrence;

(23) Identification of all persons and organizations used to evaluate or treat the condition, or both. Include the facility, provider and complete address;

(24) Description of all procedures, medications, therapy, etc., used or recommended for the treatment of the condition.

(25) Extent and outcome of injury or illness to show the following as applicable:

(i) Fatality—enter date of death;

(ii) Restricted work; number of days; beginning date;

(iii) Occupational illness; date of initial diagnosis;

(iv) Instructions to obtain prescription medication, or receipt of prescription medication;

(v) If missed one or more days of work or next shift, provide number of work days; and beginning date;

(vi) Medical treatment beyond ''first aid'';

(vii) Hospitalization for treatment as an inpatient;

(viii) Multiple treatments or therapy sessions;

(ix) Loss of consciousness;

(x) Transfer to another job or termination of employment;

(26) Each railroad shall indicate if the Railroad Injury and Illness Summary (Continuation Sheet) (FRA Form F 6180.55a) has been filed with FRA for the injury or illness. If FRA Form F 6180.55a was not filed with FRA, then the railroad shall provide an explanation of the basis for its decision.

(27) The reporting railroad shall indicate if the injured or ill railroad employee was provided an opportunity to review his or her file; and

(28) The reporting railroad shall identify the preparer's name; title; telephone number with area code; and the date the log entry was completed.

(c) Each railroad shall provide the employee, upon request, a copy of either the completed Railroad Employee Injury and/or Illness Record (Form FRA F 6180.98) or the alternative railroad-designed record as described in paragraphs (a) and (b) of this section as well as a copy of forms or reports required to be maintained or filed under this part pertaining to that employee's own work-related injury or illness.

(d) Each railroad shall maintain the Initial Rail Equipment Accident/Incident Record (Form FRA F 6180.97) or an alternative railroad-designed record as described in paragraph (e) of this section of reportable and accountable collisions, derailments, fires, explosions, acts of God, or other events involving the operation of railroad on-track equipment, signals, track, or track equipment (standing or moving) that result in damages to railroad on-track equipment, signals, tracks, track structures, or roadbed, including labor costs and all other costs for repairs or replacement in kind for each railroad establishment where workers report to work, including, but not limited to, an operating division, general office, and major installation such as a locomotive or car repair or construction facility.

(e) The alternative railroad-designed record may be used in lieu of the Initial Rail Equipment Accident/Incident Record (Form FRA F 6180.97). Any such alternative record shall contain all of the information required on the Initial Rail Equipment Accident/Incident Record. Although this information may be displayed in a different order from that on the Initial Rail Equipment Accident/Incident Record, the order of the information shall be consistent from one such record to another such record. The order chosen by the railroad shall be consistent for each of the railroad's reporting establishments. Railroads may list additional information in the alternative record beyond the information required on the Initial Rail Equipment Accident/Incident Record. The alternative record shall contain, at a minimum, the following information:

(1) Date and time of accident;

(2) Reporting railroad, and accident/incident number;

(3) Other railroad, if applicable, and other railroad's accident/incident number;

(4) Railroad responsible for track maintenance, and that railroad's incident number;

(5) Type of accident/incident (derailment, collision, etc.);

(6) Number of cars carrying hazardous materials that derailed or were damaged; and number of cars carrying

hazardous materials that released product;

(7) Division;

(8) Nearest city or town;

(9) State;

(10) Milepost (to the nearest tenth);

(11) Specific site;

(12) Speed (indicate if actual or estimate);

(13) Train number or job number;

(14) Type of equipment (freight, passenger, yard switching, etc.);

(15) Type of track (main, yard, siding, industry);

(16) Total number of locomotives in train;

(17) Total number of locomotives that derailed;

(18) Total number of cars in train;

(19) Total number of cars that derailed;

(20) Total amount of damage in dollars to equipment based on computations as described in the ''FRA Guide for Preparing Accidents/Incidents Reports'';

(21) Total amount of damage in dollars to track, signal, way and structures based on computations as described in the ''FRA Guide for Preparing Accidents/Incidents Reports'';

(22) Primary cause;

(23) Contributing cause;

(24) Persons injured and persons killed, broken down into the following classifications: worker on duty—employee; employee not on duty; passenger on train; nontrespasser—on railroad property; trespasser; worker on duty—contractor; contractor—other; worker on duty—volunteer; volunteer—other; and nontrespasser—off railroad property;

(25) Narrative description of the accident;

(26) Whether the accident/incident was reported to FRA;

(27) Preparer's name, title, telephone number with area code, and signature; and

(28) Date the report was completed.

(f) Each railroad shall enter each reportable and accountable injury and illness and each reportable and accountable rail equipment accident/incident on the appropriate record, as required by paragraphs (a) through (e) of this section, as early as practicable but no later than seven working days after receiving information or acquiring knowledge that an injury or illness or rail equipment accident/incident has occurred.

(g) The records required under paragraphs (a) through (e) of this section may be maintained at the local establishment or, alternatively, at a centralized location. If the records are maintained at a centralized location, but not through electronic means, then a paper copy of the records that is current within 35 days of the month to which it applies shall be available for that establishment. If the records are maintained at a centralized location through electronic means, then the records for that establishment shall be available for review in a hard copy format within four business hours of FRA's request. FRA recognizes that circumstances outside the railroad's control may preclude it from fulfilling the four-business-hour time limit. In these circumstances, FRA will not assess a monetary penalty against the railroad for its failure to provide the requested documentation provided the railroad made a reasonable effort to correct the problem.

(h) Except as provided in paragraph(h)(15) of this section, a listing of all injuries and occupational illnesses reported to FRA as having occurred at an establishment shall be posted in a conspicuous location at that establishment, within 30 days after the expiration of the month during which the injuries and illnesses occurred, if the establishment has been in continual operation for a minimum of 90 calendar days. If the establishment has not been in continual operation for a minimum of 90 calendar days, the listing of all injuries and occupational illnesses reported to FRA as having occurred at the establishment shall be posted, within 30 days after the expiration of the month during which the injuries and illnesses occurred, in a conspicuous location at the next higher organizational level establishment, such as one of the following: an operating division headquarters; a major classification yard or terminal headquarters; a major equipment maintenance or repair installation, *e.g.*, a locomotive or rail car

repair or construction facility; a railroad signal and maintenance-of-way division headquarters; or a central location where track or signal maintenance employees are assigned as a headquarters or receive work assignments. These examples include facilities that are generally major facilities of a permanent nature where the railroad generally posts or disseminates company informational notices and policies, *e.g.*, the policy statement in the internal control plan required by §225.33 concerning harassment and intimidation. At a minimum, ''establishment'' posting is required and shall include locations where a railroad reasonably expects its employees to report during a 12-month period and to have the opportunity to observe the posted list containing any reportable injuries or illnesses they have suffered during the applicable period. This listing shall be posted and shall remain continuously displayed for the next twelve consecutive months. Incidents reported for employees at that establishment shall be displayed in date sequence. The listing shall contain, at a minimum, the information specified in paragraphs (h)(1) through (14) of this section.

(1) Name and address of the establishment;

(2) Calendar year of the cases being displayed;

(3) Incident number used to report case;

(4) Date of the injury or illness;

(5) Location of incident;

(6) Regular job title of employee injured or ill;

(7) Description of the injury or condition;

(8) Number of days employee absent from work at time of posting;

(9) Number of days of work restriction for employee at time of posting;

(10) If fatality—enter date of death;

(11) Annual average number of railroad employees reporting to this establishment;

(12) Preparer's name, title, telephone number with area code, and signature (or, in lieu of signing each establishment's list of reportable injuries and illnesses, the railroad's preparer of this monthly list may sign a cover sheet or memorandum which contains a list of each railroad establishment for which a monthly list of reportable injuries and illnesses has been prepared. This cover memorandum shall be signed by the preparer and shall have attached to it a duplicate copy of each establishment's list of monthly reportable injuries and illnesses. The preparer of the monthly lists of reportable injuries and illnesses shall mail or send by facsimile each establishment's list to the establishment in the time frame prescribed in paragraph (h) of this section.); and

(13) Date the record was completed.

(14) When there are no reportable injuries or occupational illnesses associated with an establishment for that month, the listing shall make reference to this fact.

(15) The railroad is permitted not to post information on an injury or illness only if the employee who incurred the injury or illness makes a request in writing to the railroad's reporting officer that his or her particular injury or illness not be posted.

[61 FR 30970, June 18, 1996, as amended at 61 FR 59371, Nov. 22, 1996; 61 FR 67491, Dec. 23, 1996]

§225.27 Retention of records.

(a) Each railroad shall retain the Railroad Employee Injury and/or Illness Record and the Monthly List of Injuries and Illnesses required by §225.25 for at least five years after the end of the calendar year to which they relate. Each railroad shall retain the Initial Rail Equipment Accident/Incident Record required by §225.25 for at least two years after the end of the calendar year to which it relates. Each railroad must retain the Employee Human Factor Attachments required by §225.12, the written notices to employees required by §225.12, and the Employee Statements Supplementing Railroad Accident Reports described in §225.12(g) that have been received by the railroad for at least 2 years after the end of the calendar year to which they relate.

(b) Each railroad must retain a duplicate of each form it submits to FRA under §225.21, for at least 2 years after the calendar year to which it relates.

[39 FR 43224, Dec. 11, 1974, as amended at 55 FR 37828, Sept. 13, 1990; 61 FR 30971, June 18, 1996; 61 FR 67491, Dec. 23, 1996]

§ 225.29 Penalties.

Any person (including a railroad and any manager, supervisor, official, or other employee or agent of a railroad) who violates any requirement of this part or causes the violation of any such requirement is subject to a civil penalty of at least $500 and not more than $10,000 per violation, except that: Penalties may be assessed against individuals only for willful violations, and where a grossly negligent violation or a pattern of repeated violations has created an imminent hazard of death or injury to persons, or has caused death or injury, a penalty not to exceed $20,000 per violation may be assessed. Each day a violation continues shall constitute a separate offense. See appendix A to this part for a statement of agency civil penalty policy. A person may also be subject to the criminal penalties provided for in 49 U.S.C. 21311.

[53 FR 28601, July 28, 1988, as amended at 53 FR 52931, Dec. 29, 1988; 61 FR 30971, June 18, 1996]

§ 225.31 Investigations.

(a) It is the policy of the FRA to investigate rail transportation accidents/incidents which result in the death of a railroad employee or the injury of five or more persons. Other accidents/incidents are investigated when it appears that an investigation would substantially serve to promote railroad safety.

(b) FRA representatives are authorized to investigate accidents/incidents and have been issued credentials authorizing them to inspect railroad records and properties. They are authorized to obtain all relevant information concerning accidents/incidents under investigation, to make inquiries of persons having knowledge of the facts, conduct interviews and inquiries, and attend as an observer, hearings conducted by railroads. When necessary to carry out an investigation, the FRA may authorize the issuance of subpoenas to require the production of records and the giving of testimony.

(c) Whenever necessary, the FRA will schedule a public hearing before an authorized hearing officer, in which event testimony will be taken under oath, a record made, and opportunity provided to question witnesses.

(d) When necessary in the conduct of an investigation, the Federal Railroad Administrator may require autopsies and other tests of the remains of railroad employees who die as a result of an accident/incident.

(e) Information obtained through FRA accident investigations may be published in public reports or used for other purposes FRA deems to be appropriate.

(f) Section 20903 of title 49 of the United States Code provides that no part of a report of an accident investigation under section 20902 of title 49 of the United States Code may be admitted as evidence or used for any purpose in any suit or action for damages growing out of any matter mentioned in the accident investigation report.

[39 FR 43224, Dec. 11, 1974, as amended at 61 FR 30971, June 18, 1996]

§ 225.33 Internal Control Plans.

(a) Each railroad shall adopt and comply with a written Internal Control Plan that shall be maintained at the office where the railroad's reporting officer conducts his or her official business. Each railroad shall amend its Internal Control Plan, as necessary, to reflect any significant changes to the railroad's internal reporting procedures. The Internal Control Plan shall be designed to maintain absolute accuracy and shall include, at a minimum, each of the following components:

(1) A policy statement declaring the railroad's commitment to complete and accurate reporting of all accidents, incidents, injuries, and occupational illnesses arising from the operation of the railroad, to full compliance with the letter and spirit of FRA's accident reporting regulations, and to the principle, in absolute terms, that harassment or intimidation of any person that is calculated to discourage or prevent such person from receiving proper medical treatment or from reporting such accident, incident, injury or illness will not be permitted or tolerated and will result in some stated disciplinary action against any employee, supervisor, manager, or officer of the railroad committing such harassment or intimidation.

(2) The dissemination of the policy statement; complaint procedures. Each railroad shall provide to all employees, supervisory personnel, and management the policy statement described in paragraph (a)(1). Each railroad shall have procedures to process complaints from any person about the policy stated in paragraph (a)(1) being violated, and to impose the appropriate prescribed disciplinary actions on each employee, supervisor, manager, or officer of the railroad found to have violated the policy. These procedures shall be disclosed to railroad employees, supervisors, managers, and officers. The railroad shall provide ''whistle blower'' protection to any person subject to this policy, and such policy shall be disclosed to all railroad employees, supervisors and management.

(3) Copies of internal forms and/or a description of the internal computer reporting system used for the collection and internal recording of accident and incident information.

(4) A description of the internal procedures used by the railroad for the processing of forms and/or computerized data regarding accident and incident information.

(5) A description of the internal review procedures applicable to accident and incident information collected, and reports prepared by, the railroad's safety, claims, medical and/or other departments engaged in collecting and reporting accident and incident information.

(6) A description of the internal procedures used for collecting cost data and compiling costs with respect to accident and incident information.

(7) A description of applicable internal procedures for ensuring adequate communication between the railroad department responsible for submitting accident and incident reports to FRA and any other department within the railroad responsible for collecting, receiving, processing and reporting accidents and incidents.

(8) A statement of applicable procedures providing for the updating of accident and incident information prior to reporting to FRA and a statement of applicable procedures providing for the amendment of accident and incident information as specified in the ''FRA Guide for Preparing Accidents/Incidents Reports.''

(9) A statement that specifies the name and title of the railroad officer responsible for auditing the performance of the reporting function; a statement of the frequency (not less than once per calendar year) with which audits are conducted; and identification of the site where the most recent audit report may be found for inspection and photocopying.

(10)(i) A brief description of the railroad organization, including identification of:

(A) All components that regularly come into possession of information pertinent to the preparation of reports under this part (*e.g.*, medical, claims, and legal departments; operating, mechanical, and track and structures departments; payroll, accounting, and personnel departments);

(B) The title of each railroad reporting officer;

(C) The title of each manager of such components, by component; and

(D) All officers to whom managers of such components are responsible, by component.

(ii) A current organization chart satisfies paragraphs (a)(10)(i) (B), (C), and (D) of this section.

(b) [Reserved]

[61 FR 30972, June 18, 1996, as amended at 61 FR 59371, Nov. 22, 1996; 61 FR 67491, Dec. 23, 1996]

§ 225.35 Access to records and reports.

Each railroad subject to this part shall have at least one location, and shall identify each location, where any representative of the Federal Railroad Administration or of a State agency participating in investigative and surveillance activities under part 212 of this chapter or any other authorized representative, has centralized *access* to a copy of any record and report required under this part, for examination and photocopying in a reasonable manner during normal business hours.

Each railroad subject to this part shall also provide to any representative of the Federal Railroad Administration or of a State agency participating in investigative or and surveillance activities under part 212 of this chapter or any other authorized representative

access to relevant medical and claims records for examination and photocopying in a reasonable manner during normal business hours.Such representatives shall display proper credentials when requested. Each railroad shall identify the locations where a copy of any record and report required under this part is accessible for inspection and photocopying by maintaining a list of such establishment locations at the office where the railroad's reporting officer conducts his or her official business. A copy of any record and report required under this part shall be accessible within four business hours after the request. FRA will not assess a monetary penalty against the railroad for its failure to provide the requested documentation when circumstances outside the railroad's control preclude it from fulfilling the four-business-hour time limit and the railroad has made a reasonable effort to correct the problem. Should a railroad assert a legal privilege with respect to certain claims and medical records, failure to provide FRA access to such records would not constitute a violation of this section. FRA retains the right to issue a subpoena to obtain such records under 49 U.S.C. §§ 20107 and 20902 and §§ 209.7(a) and 225.31(b) of this title, and the railroad may contest that subpoena.

[61 FR 30972, June 18, 1996, as amended at 61 FR 59371, Nov. 22, 1996]

§ 225.37 Magnetic media transfer and electronic submission.

(a) A railroad has the option of submitting the following reports, updates, and amendments by way of magnetic media (computer diskette or magnetic tape), or by means of electronic submission over telephone lines or other means:

(1) The Rail Equipment Accident/Incident Report (Form FRA F 6180.54);

(2) the Railroad Injury and Illness Summary (Form FRA F 6180.55);

(3) the Railroad Injury and Illness Summary (Continuation Sheet) (Form FRA F 6180.55a);

(4) the Highway-Rail Grade Crossing Accident/Incident Report (Form FRA F 6180.57); and

(5) the Batch Control Form (Form FRA F 6180.99).

(b) Each railroad utilizing the magnetic media option shall submit to FRA the following:

(1) the computer diskette or magnetic tape;

(2) the Batch Control Form (Form FRA F 6180.99); and

(3) a notarized hard copy of the Railroad Injury and Illness Summary (Form FRA F 6180.55), signed by the railroad's reporting officer.

(c) Each railroad utilizing the electronic submission option shall submit to FRA the following:

(1) the Batch Control Form (Form FRA F 6180.99) which is submitted to an FRA-designated computer; and

(2) a notarized hard copy of the Railroad Injury and Illness Summary (Form FRA F 6180.55), signed by the railroad's reporting officer.

(d) Each railroad employing either the magnetic media or electronic submission option, shall submit its monthly reporting data for the reports identified in paragraph (a) of this section in a year-to-date file format as described in the ''FRA Guide for Preparing Accidents/Incidents Reports.''

(e) In addition to fulfilling the requirements stated in paragraph (b) through (d) of this section, each railroad initially utilizing either the magnetic media or electronic submission option, shall submit the hard copy report(s) for each accident/incident it reports by such means. FRA will continually review the railroad''s submitted hard copy reports against the data it has submitted electronically, or by means of magnetic media. Once the magnetic media or electronic submission is in *total* agreement with the submitted hard copies of the reports for *three* consecutive reporting months, FRA will notify the railroad, in writing, that submission of the hard copy reports, except for the notarized Railroad Injury and Illness Summary, is no longer required.

[61 FR 30972, June 18, 1996]

APPENDIX A TO PART 225—SCHEDULE OF CIVIL PENALTIES [1]

Section (including computer code, if applicable)	Violation	Willful violation
225.9 Telephonic reports of certain accidents/incidents	$1,000	$2,000
225.11 Reports of accidents/ incidents	2,500	5,000
225.12(a):		
Failure to file Railroad Employee Human Factor Attachment properly.		
(1) Employee identified	2,500	5,000
(2) No employee identified	1,000	2,000
225.12(b):		
(1) Failure to notify employee properly	2,500	5,000
(2) Notification of employee not involved in accident	2,500	5,000
225.12(c):		
Failure of employing railroad to provide requested information properly	1,000	2,000
225.12(d):		
(1) Failure to revise report when identity becomes known	2,500	5,000
(2) Failure to notify after late identification	2,500	5,000
225.12(f)(1):		
Submission of notice if employee dies as result of the reported accident	2,500	5,000
225.12(g):		
Willfully false accident statement by employee	.....	5,000
225.13 Late reports	2,500	5,000
225.17(d) Alcohol or drug involvement	2,500	5,000
225.23 Joint operations	([1])	([1])
225.25 Recordkeeping	2,500	5,000
225.27 Retention of records	1,000	2,000
225.33:		
(1) Failure to adopt the Internal Control Plan	2,500	5,000
(2) Inaccurate reporting due to failure to comply with the Internal Control Plan	2,500	5,000
(3) Failure to comply with the intimidation/harassment policy in the Internal Control Plan	2,500	5,000
225.35 Access to records and reports	2,500	5,000

[1] A penalty may be assessed against an individual only for a willful violation. The Administrator reserves the right to assess a penalty of up to $20,000 for any violation where circumstances warrant. See 49 CFR part 209, appendix A. A failure to comply with § 225.23 constitutes a violation of § 225.11. For purposes of §§ 225.25 and 225.27 of this part, each of the following constitutes a single act of noncompliance: (1) a missing or incomplete log entry for a particular employee's injury or illness; or (2) a missing or incomplete log record for a particular rail equipment accident or incident. Each day a violation continues is a separate offense.

[61 FR 30973, June 18, 1996]

APPENDIX B TO PART 225—PROCEDURE FOR DETERMINING REPORTING THRESHOLD

1. Data from the U.S. Department of Labor, Bureau of Labor Statistics (BLS), LABSTAT Series Reports are used in the calculation. The equation used to adjust the reporting threshold uses the average hourly earnings reported for Class I railroads and Amtrak and an overall railroad equipment cost index determined by the BLS. The two factors are weighted equally.

2. For the wage component, LABSTAT Series Report, Standard Industrial Classification (SIC) code 4011 for Class I Railroad Average Hourly Earnings is used.

3. For the equipment component, LABSTAT Series Report, Producer Price Index (PPI) Series WPU 144 for Railroad Equipment is used.

4. In the month of October, final data covering the 12-month period ending with the month of June are obtained from BLS. The 12 monthly figures are totaled and divided by 12 to produce monthly averages to be used in computing the projected annual (12-month) average for the next calendar year.

5. The wage data are reported in terms of dollars earned per hour, while the equipment cost data are indexed to a base year of 1982.

6. The procedure for adjusting the reporting threshold is shown in the formula below. The wage component appears as a fractional change relative to the prior year, while the equipment component is a difference of two percentages which must be divided by 100 to present it in a consistent fractional form. After performing the calculation, the result is rounded to the nearest $100.

7. The current weightings represent the general assumption that damage repair costs, at levels at or near the threshold, are split approximately evenly between labor and materials.

8. Formula:

$$\text{New Threshold} = \text{Prior Threshold} \times \left\{1 + 0.5\frac{(\text{Wn} - \text{Wp})}{\text{Wp}} + 0.5\frac{(\text{En} - \text{Ep})}{100}\right\}$$

Where:

Prior Threshold=$6,300 (for calendar years 1991–1996)

Wn=New average hourly wage rate ($) = 17.55500

Wp=Prior average hourly wage rate ($) = 17.13417

En=New equipment average PPI value ($)= 136.76667

Ep=Prior equipment average PPI value ($) = 131.66667

9. The new threshold is $6,500 and is effective beginning January 1, 1997.

[61 FR 60634, Nov. 29, 1996]

PART 228—HOURS OF SERVICE OF RAILROAD EMPLOYEES

Subpart A—General

Sec.
228.1 Scope.
228.3 Application.
228.5 Definitions.

Subpart B—Records and Reporting

228.7 Hours of duty.
228.9 Railroad records; general.
228.11 Hours of duty records.
228.17 Dispatcher's record of train movements.
228.19 Monthly reports of excess service.
228.21 Civil penalty.
228.23 Criminal penalty.

Subpart C—Construction of Employee Sleeping Quarters

228.101 Distance requirement; definitions.
228.103 Approval procedure; construction within one-half mile (2,640 feet) (804 meters).
228.105 Additional requirements; construction within one-third mile (1,760 feet) (536 meters) of certain switching.
228.107 Action on petition.
APPENDIX A TO PART 228—REQUIREMENTS OF THE HOURS OF SERVICE ACT: STATEMENT OF AGENCY POLICY AND INTERPRETATION
APPENDIX B TO PART 228—SCHEDULE OF CIVIL PENALTIES
APPENDIX C TO PART 228—GUIDELINES FOR CLEAN, SAFE, AND SANITARY RAILROAD PROVIDED CAMP CARS

AUTHORITY: 49 U.S.C. 20102–20103, 20107–20108, 20111, 20112, 21101–21108, 21303–21304, as amended; 49 U.S.C. App. 1655(e), as amended; 49 CFR 1.49(d), (m).

SOURCE: 37 FR 12234, June 21, 1972, unless otherwise noted.

Subpart A—General

§ 228.1 Scope.

This part—

(a) Prescribes reporting and record keeping requirements with respect to the hours of service of certain railroad employees; and

(b) Establishes standards and procedures concerning the construction or reconstruction of employee sleeping quarters.

[43 FR 31012, July 19, 1978]

§ 228.3 Application.

(a) Except as provided in paragraph (b), this part applies to all railroads.

(b) This part does not apply to:

(1) A railroad that operates only on track inside an installation which is not part of the general railroad system of transportation; or

(2) Rapid transit operations in an urban area that are not connected with the general railroad system of transportation.

[54 FR 33229, Aug. 14, 1989]

§ 228.5 Definitions.

As used in this part:

(a) *Administrator* means the Administrator of the Federal Railroad Administrator or any person to whom he delegated authority in the matter concerned.

(b) *Carrier, common carrier,* and *common carrier engaged in interstate or foreign commerce by railroad* mean *railroad* as that term is defined below.

(c) *Employee* means an individual employed by the common carrier who (1) is actually engaged in or connected with the movement of any train, including a person who performs the duties of a hostler, (2) dispatches, reports, transmits, receives, or delivers orders pertaining to train movements by the

use of telegraph, telephone, radio, or any other electrical or mechanical device, or (3) is engaged in installing, repairing or maintaining signal systems.

(d) *Railroad* means all forms of non-highway ground transportation that run on rails or electromagnetic guideways, including (1) commuter or other short-haul rail passenger service in a metropolitan or suburban area, and (2) high speed ground transportation systems that connect metropolitan areas, without regard to whether they use new technologies not associated with traditional railroads. Such term does not include rapid transit operations within an urban area that are not connected to the general railroad system of transportation.

[54 FR 33229, Aug. 14, 1989]

Subpart B—Records and Reporting

§228.7 Hours of duty.

(a) For purposes of this part, time on duty of an employee actually engaged in or connected with the movement of any train, including a hostler, begins when he reports for duty and ends when he is finally released from duty, and includes—

(1) Time engaged in or connected with the movement of any train;

(2) Any interim period available for rest at a location that is not a designated terminal;

(3) Any interim period of less than 4 hours available for rest at a designated terminal;

(4) Time spent in deadhead transportation en route to a duty assignment; and

(5) Time engaged in any other service for the carrier.

Time spent in deadhead transportation by an employee returning from duty to his point of final release may not be counted in computing time off duty or time on duty.

(b) For purposes of this part, time on duty of an employee who dispatches, reports, transmits, receives, or delivers orders pertaining to train movements by use of telegraph, telephone, radio, or any other electrical or mechanical device includes all time on duty in other service performed for the common carrier during the 24-hour period involved.

(c) For purposes of this part, time on duty of an employee who is engaged in installing, repairing or maintaining signal systems includes all time on duty in other service performed for a common carrier during the 24-hour period involved.

[37 FR 12234, June 21, 1972, as amended at 43 FR 3124, Jan. 23, 1978]

§228.9 Railroad records; general.

(a) Records maintained under this part shall be—

(1) Signed by the employee whose time on duty is being recorded or, in the case of train and engine crews, signed by the ranking crew member;

(2) Retained for 2 years; and

(3) Available for inspection and copying by the Administrator during regular business hours.

(b) [Reserved]

§228.11 Hours of duty records.

(a) Each carrier shall keep a record of the following information concerning the hours of duty of each employee:

(1) Identification of employee.

(2) Place, date, and beginning and ending times for hours of duty in each occupation.

(3) Total time on duty in all occupations.

(4) Number of consecutive hours off duty prior to going on duty.

(5) Beginning and ending times of periods spent in transportation, other than personal commuting, to or from a duty assignment and mode of transportation (train, track car, carrier motor vehicle, personal automobile, etc.).

(b) [Reserved]

[37 FR 12234, June 21, 1972, as amended at 43 FR 3124, Jan. 23, 1978]

§228.17 Dispatcher's record of train movements.

(a) Each carrier shall keep, for each dispatching district, a record of train movements made under the direction and control of a dispatcher who uses telegraph, telephone, radio, or any other electrical or mechanical device to dispatch, report, transmit, receive, or deliver orders pertaining to train

movements. The following information shall be included in the record:

(1) Identification of timetable in effect.

(2) Location and date.

(3) Identification of dispatchers and their times on duty.

(4) Weather conditions at 6-hour intervals.

(5) Identification of enginemen and conductors and their times on duty.

(6) Identification of trains and engines.

(7) Station names and office designations.

(8) Distances between stations.

(9) Direction of movement and the time each train passes all reporting stations.

(10) Arrival and departure times of trains at all reporting stations.

(11) Unusual events affecting movement of trains and identification of trains affected.

(b) [Reserved]

§ 228.19 Monthly reports of excess service.

(a) Each carrier shall report to the Associate Administrator for Safety, (RRS–1), Federal Railroad Administration, Washington, DC 20590, each of the following instances within 30 days after the calendar month in which the instance occurs:

(1) A member of a train or engine crew or other employee engaged in or connected with the movement of any train, including a hostler, is on duty for more than 12 consecutive hours.

(2) A member of a train or engine crew or other employee engaged in or connected with the movement of any train, including a hostler, returns to duty after 12 hours of continuous service without at least 10 consecutive hours off duty.

(3) A member of a train or engine crew or other employee engaged in or connected with the movement of any train, including a hostler, continues on duty without at least 8 consecutive hours off duty during the preceding 24 hours.[1]

(4) A member of a train or engine crew or other employee engaged in or connected with the movement of any train, including a hostler, returns to duty without at least 8 consecutive hours off duty during the preceding 24 hours.[1]

(5) An employee who transmits, receives, or delivers orders affecting train movements is on duty for more than 9 hours in any 24-hour period at an office where two or more shifts are employed.

(6) An employee who transmits, receives, or delivers orders affecting train movements is on duty for more than 12 hours in any 24-hour period at any office where one shift is employed.

(7) An employee engaged in installing, repairing or maintaining signal systems is on duty for more than 12 hours in a twenty-four hour period.

(8) An employee engaged in installing, repairing or maintaining signal systems returns to duty after 12 hours of continuous service without at least 10 consecutive hours off duty.

(9) An employee engaged in installing, repairing or maintaining signal systems continues on duty without at least 8 consecutive hours off duty during the preceding 24 hours.

(10) An employee engaged in installing, repairing or maintaining signal systems returns to duty without at least 8 consecutive hours off duty during the preceding 24 hours.

(b) Reports required by paragraph (a) of this section shall be filed in writing on FRA Form F–6180–3[2] with the Office of Safety, Federal Railroad Administration, Washington, DC 20590. A separate form shall be used for each instance reported.

[37 FR 12234, June 21, 1972, as amended at 43 FR 3124, Jan. 23, 1978]

---

[1] Instances involving tours of duty that are broken by four or more consecutive hours off duty time at a designated terminal which do not constitute more than a total of 12 hours time on duty are not required to be reported, provided such tours of duty are immediately preceded by 8 or more consecutive hours off-duty time. Instances involving tours of duty that are broken by less than 8 consecutive hours off duty which constitute more than a total of 12 hours time on duty must be reported.

[2] Form may be obtained from the Office of Safety, Federal Railroad Administration, Washington, DC 20590. Reproduction is authorized.

§ 228.21 Civil penalty.

Any person (including a railroad subject to this part and any manager, supervisor, official, or other employee or agent of such a railroad) who violates any requirement of this part or causes the violation of any such requirement is subject to a civil penalty of at least $250 and not more than $10,000 per violation, except that: Penalties may be assessed against individuals only for willful violations, and, where a grossly negligent violation or a pattern of repeated violations has created an imminent hazard of death or injury to persons, or has caused death or injury, a penalty not to exceed $20,000 per violation may be assessed. Each day a violation continues shall constitute a separate offense. See appendix B to this part for a statement of agency civil penalty policy. Violations of the Hours of Service Act itself (*e.g.*, requiring an employee to work excessive hours or beginning construction of a sleeping quarters subject to approval under subpart C of this part without prior approval) are subject to penalty under that Act's penalty provision, 45 U.S.C. 64a.

[53 FR 52931, Dec. 29, 1988]

§ 228.23 Criminal penalty.

Any person who knowingly and willfully falsifies a report or record required to be kept under this part or otherwise knowingly and willfully violates any requirement of this part may be liable for criminal penalties of a fine up to $5,000, imprisonment for up to two years, or both, in accordance with 45 U.S.C. 438(e).

[53 FR 52931, Dec. 29, 1988]

Subpart C—Construction of Employee Sleeping Quarters

SOURCE: 43 FR 31012, July 19, 1978, unless otherwise noted.

§ 228.101 Distance requirement; definitions.

(a) The Hours of Service Act, as amended (45 U.S.C. 61–64b), makes it unlawful for any common carrier engaged in interstate or foreign commerce by railroad to begin, on or after July 8, 1976, the construction or reconstruction of sleeping quarters for employees who perform duties covered by the act ''within or in the immediate vicinity (as determined in accordance with rules prescribed by the Secretary of Transportation) of any area where railroad switching or humping operations are performed.'' 45 U.S.C. 62(a)(4). This subpart sets forth (1) a general definition of ''immediate vicinity'' (§ 228.101(b)), (2) procedures under which a carrier may request a determination by the Federal Railroad Administration that a particular proposed site is not within the ''immediate vicinity'' of railroad switching or humping operations (§§ 228.103 and 228.105), and (3) the basic criteria utilized in evaluating proposed sites (§ 228.107).

(b) Except as determined in accordance with the provisions of this subpart. ''The immediate vicinity'' shall mean the area within one-half mile (2,640 feet) (804 meters) of switching or humping operations as measured from the nearest rail of the nearest trackage where switching or humping operations are performed to the point on the site where the carrier proposes to construct or reconstruct the exterior wall of the structure, or portion of such wall, which is closest to such operations.

(c) As used in this subpart—

(1) *Construction* shall refer to the—

(i) Creation of a new facility;

(ii) Expansion of an existing facility;

(iii) Placement of a mobile or modular facility; or

(iv) Acquisition and use of an existing building.

(2) *Reconstruction* shall refer to the—

(i) Replacement of an existing facility with a new facility on the same site; or

(ii) Rehabilitation or improvement of an existing facility (normal periodic maintenance excepted) involving the expenditure of an amount representing more than 50 percent of the cost of replacing such facility on the same site at the time the work of rehabilitation or improvement began, the replacement cost to be estimated on the basis of contemporary construction methods and materials.

(3) *Switching or humping operations* includes the classification of placarded railroad cars according to commodity

or destination, assembling of placarded cars for train movements, changing the position of placarded cars for purposes of loading, unloading, or weighing, and the placing of placarded cars for repair. However, the term does not include the moving of rail equipment in connection with work service, the moving of a train or part of a train within yard limits by a road locomotive or placing locomotives or cars in a train or removing them from a train by a road locomotive while en route to the train's destination. The term does include operations within this definition which are conducted by any railroad; it is not limited to the operations of the carrier contemplating construction or reconstruction of railroad employee sleeping quarters.

(4) *Placarded car* shall mean a railroad car required to be placarded by the Department of Transportation hazardous materials regulations (49 CFR 172.504).

(5) The term L_{eq} (8) shall mean the equivalent steady state sound level which in 8 hours would contain the same acoustic energy as the time-varying sound level during the same time period.

§ 228.103 Approval procedure: construction within one-half mile (2,640 feet) (804 meters).

(a) A common carrier that has developed plans for the construction or reconstruction of sleeping quarters subject to this subpart and which is considering a site less than one-half mile (2,640 feet) (804 meters) from any area where switching or humping operations are performed, measured from the nearest rail of the nearest trackage utilized on a regular or intermittent basis for switching or humping operations to the point on the site where the carrier proposes to construct or reconstruct the exterior wall of the structure, or portion of such wall, which is closest to such operations, must obtain the approval of the Federal Railroad Administration before commencing construction or reconstruction on that site. Approval may be requested by filing a petition conforming to the requirements of this subpart.

(b) A carrier is deemed to have conducted switching or humping operations on particular trackage within the meaning of this subpart if placarded cars are subjected to the operations described in § 228.101(c)(3) within the 365-day period immediately preceding the date construction or reconstruction is commenced or if such operations are to be permitted on such trackage after such date. If the carrier does not have reliable records concerning the traffic handled on the trackage within the specified period, it shall be presumed that switching of placarded cars is conducted at the location and construction or reconstruction of sleeping quarters within one-half mile shall be subject to the approval procedures of this subpart.

(c) A petition shall be filed in triplicate with the Secretary, Railroad Safety Board, Federal Railroad Administration, Washington, DC 20590 and shall contain the following:

(1) A brief description of the type of construction planned, including materials to be employed, means of egress from the quarters, and actual and projected exterior noise levels and projected interior noise levels;

(2) The number of employees expected to utilize the quarters at full capacity;

(3) A brief description of the site, including:

(i) Distance from trackage where switching or humping operations are performed, specifying distances from particular functions such as classification, repair, assembling of trains from large groups of cars, etc. cetera;

(ii) Topography within a general area consisting of the site and all of the rail facilities close to the site;

(iii) Location of other physical improvements situated between the site and areas where railroad operations are conducted;

(4) A blueprint or other drawing showing the relationship of the site to trackage and other planned and existing facilities;

(5) The proposed or estimated date for commencement of construction;

(6) A description of the average number and variety of rail operations in the areas within one-half mile (2,640

feet) (804 meters) of the site (e.g., number of cars classified in 24-hour period; number of train movements);

(7) An estimate of the average daily number of placarded rail cars transporting hazardous materials through the railroad facility (where practicable, based on a 365-day period sample, that period not having ended more than 120 days prior to the date of filing the petition), specifying the—

(i) Number of such cars transporting class A explosives and poison gases; and

(ii) Number of DOT Specification 112A and 114A tank cars transporting flammable gas subject to FRA emergency order No. 5;

(8) A statement certified by a corporate officer of the carrier possessing authority over the subject matter explaining any plans of that carrier for utilization of existing trackage, or for the construction of new trackage, which may impact on the location of switching or humping operations within one-half mile of the proposed site (if there are no plans, the carrier official must so certify); and

(9) Any further information which is necessary for evaluation of the site.

(d) A petition filed under this section must contain a statement that the petition has been served on the recognized representatives of the railroad employees who will be utilizing the proposed sleeping quarters, together with a list of the employee representatives served.

§ 228.105 Additional requirements; construction within one-third mile (1,760 feet) (536 meters) of certain switching.

(a) In addition to providing the information specified by § 228.103, a carrier seeking approval of a site located within one-third mile (1,760 feet) (536 meters) of any area where railroad switching or humping operations are performed involving any cars required to be placarded ''EXPLOSIVES A'' or ''POISON GAS'' or any DOT Specification 112A or 114A tank cars transporting flammable gas subject to FRA emergency order No. 5 shall establish by a supplementary statement certified by a corporate officer possessing authority over the subject matter that—

(1) No feasible alternate site located at or beyond one-third mile from switching or humping operations is either presently available to the railroad or is obtainable within 3 miles (15,840 feet) (4,827 meters) of the reporting point for the employees who are to be housed in the sleeping quarters;

(2) Natural or other barriers exist or will be created prior to occupancy of the proposed facility between the proposed site and any areas in which switching or humping operations are performed which will be adequate to shield the facility from the direct and severe effects of a hazardous materials accident/incident arising in an area of switching or humping operations;

(3) The topography of the property is such as most likely to cause any hazardous materials unintentionally released during switching or humping to flow away from the proposed site; and

(4) Precautions for ensuring employee safety from toxic gases or explosions such as employee training and evacuation plans, availability of appropriate respiratory protection, and measures for fire protection, have been considered.

(b) In the absence of reliable records concerning traffic handled on trackage within the one-third mile area, it shall be presumed that the types of cars enumerated in paragraph (a) of this section are switched on that trackage; and the additional requirements of this section shall be met by the petitioning carrier, unless the carrier establishes that the switching of the enumerated cars will be effectively barred from the trackage if the petition is approved.

§ 228.107 Action on petition.

(a) Each petition for approval filed under § 228.103 is referred to the Railroad Safety Board for action in accordance with the provisions of part 211, title 49, CFR, concerning the processing of requests for special approvals.

(b) In considering a petition for approval filed under this subpart, the Railroad Safety Board evaluates the material factors bearing on—

(1) The safety of employees utilizing the proposed facility in the event of a hazardous materials accident/incident and in light of other relevant safety factors; and

(2) Interior noise levels in the facility.

(c) The Railroad Safety Board will not approve an application submitted under this subpart if it appears from the available information that the proposed sleeping quarters will be so situated and constructed as to permit interior noise levels due to noise under the control of the railroad to exceed an $L_{eq}(8)$ value of 55dB(A). If individual air conditioning and heating systems are to be utilized, projections may relate to noise levels with such units turned off.

(d) Approval of a petition filed under this subpart may be withdrawn or modified at any time if it is ascertained, after opportunity for a hearing, that any representation of fact or intent made by a carrier in materials submitted in support of a petition was not accurate or truthful at the time such representation was made.

APPENDIX A TO PART 228—REQUIREMENTS OF THE HOURS OF SERVICE ACT: STATEMENT OF AGENCY POLICY AND INTERPRETATION

First enacted in 1907, the Hours of Service Act was substantially revised in 1969 by Public Law 91–169. Further amendments were enacted as part of the Federal Railroad Safety Authorization Act of 1976, Public Law 94–348 and by the Rail Safety Improvement Act of 1988, Public Law 100–342. The purpose of the law is ''to promote the safety of employees and travelers upon railroads by limiting the hours of service of employees * * *.'' This appendix is designed to explain the effect of the law in commonly-encountered situations.

The Act governs the maximum work hours of employees engaged in one or more of the basic categories of covered service treated below. If an individual performs more than one kind of covered service during a tour of duty, then the most restrictive of the applicable limitations control.

The act applies to any railroad, as that term is defined in 45 U.S.C. 431(e). It governs the carrier's operations over its own railroad and all lines of road which it uses.

TRAIN AND ENGINE SERVICE

Covered Service. Train or engine service refers to the actual assembling or operation of trains. Employees who perform this type of service commonly include locomotive engineers, firemen, conductors, trainmen, switchmen, switchtenders (unless their duties come under the provisions of section 3) and hostlers. With the passage of the 1976 amendments, both inside and outside hostlers are considered to be connected with the movement of trains. Previously, only outside hostlers were covered. Any other employee who is actually engaged in or connected with the movement of any train is also covered, regardless of his job title.

Limitations on Hours. The Act establishes two limitations on hours of service. First, no employee engaged in train or engine service may be required or permitted to work in excess of twelve consecutive hours. After working a full twelve consecutive hours, an employee must be given at least ten consecutive hours off duty before being permitted to return to work.

Second, no employee engaged in train or engine service may be required or permitted to continue on duty or go on duty unless he has had at least eight consecutive hours off duty within the preceding twenty-four hours. This latter limitation, when read in conjunction with the requirements with respect to computation of duty time (discussed below) results in several conclusions:

(1) When an employee's work tour is broken or interrupted by a valid period of interim release (4 hours or more at a designated terminal), he may return to duty for the balance of the total 12-hour work tour during a 24-hour period.

(2) After completing the 12 hours of broken duty, or at the end of the 24-hour period, whichever occurs first, the employee may not be required or permitted to continue on duty or to go on duty until he has had at least 8 consecutive hours off duty.

(3) The 24-hour period referred to in paragraphs 1 and 2 above shall begin upon the commencement of a work tour by the employee immediately after his having received a statutory off-duty period of 8 or 10 hours as appropriate.

Duty time and effective periods of release. On-duty time commences when an employee reports at the time and place specified by the railroad and terminates when the employee is finally released of all responsibilities. (Time spent in deadhead transportation to a duty assignment is also counted as time on duty. See discussion below.) Any period available for rest that is of four or more hours and is at a designated terminal is off-duty time. All other periods available for rest must be counted as time on duty under the law, regardless of their duration.

The term ''designated terminal'' means a terminal (1) which is designated in or under a collective bargaining agreement as the ''home'' or ''away-from-home'' terminal for a particular crew assignment and (2) which has suitable facilities for food and lodging. Carrier and union representatives may agree to establish additional designated terminals having such facilities as points of effective

release under the Act. Agreements to designate additional terminals for purposes of release under the Act should be reduced to writing and should make reference to the particular assignments affected and to the Hours of Service Act. The following are common situations illustrating the designated terminal concept:

(1) A freight or passenger road crew operates a train from home terminal ''A'' to away-from-home terminal ''B'' (or the reverse). Terminals ''A'' and ''B'' would normally be the designated terminals for this specific crew assignment. However, carrier and employee representatives may agree to designate additional terminals having suitable facilities for food and lodging as appropriate points of release under the Hours of Service Act.

(2) A road crew operates a train in turnaround service from home terminal ''A'' to turn-around point ''B'' and back to ''A''. Terminal ''A'' is the only designated terminal for this specific crew assignment, unless carrier and employee representatives have agreed to designate additional terminals having suitable facilities for food and lodging.

(3) A crew is assigned to operate a maintenance-of-way work train from home terminal ''A'', work on line of road and tie up for rest along the line of road at point ''B''. Home terminal ''A'' and tie-up point ''B'' both qualify as designated terminals for this specific work train crew assignment. Of course, suitable facilities for food and lodging must be available at tie-up point ''B''.

Deadheading. Under the Act time spent in deadhead transportation receives special treatment. Time spent in deadhead transportation to a duty assignment by a train or engine service employee is considered on-duty time. Time spent in deadhead transportation from the final duty assignment of the work tour to the point of final release is not computed as either time on duty or time off duty. Thus, the period of deadhead transportation to point of final release may not be included in the required 8- or 10-hour off-duty period. Time spent in deadhead transportation to a duty assignment is calculated from the time the employee reports for deadhead until he reaches his duty assignment.

All time spent awaiting the arrival of a deadhead vehicle for transportation from the final duty assignment of the work tour to the point of final release is considered limbo time, *i.e.,* neither time on duty nor time off duty, provided that the employee is given no specific responsibilities to perform during this time. However, if an employee is required to perform service of any kind during that period (*e.g.,* protecting the train against vandalism, observing passing trains for any defects or unsafe conditions, flagging, shutting down locomotives, checking fluid levels, or communicating train consist information via radio), he or she will be considered as on duty until all such service is completed. Of course, where a railroad carrier's operating rules clearly relieve the employee of all duties during the waiting period and no duties are specifically assigned, the waiting time is not computed as either time on duty or time off duty.

Transit time from the employee's residence to his regular reporting point is not considered deadhead time.

If an employee utilizes personal automobile transportation to a point of duty assignment other than the regular reporting point in lieu of deadhead transportation provided by the carrier, such actual travel time is considered as deadheading time. However, if the actual travel time from his home to the point of duty assignment exceeds a reasonable travel time from the regular reporting point to the point of duty assignment, then only the latter period is counted. Of course, actual travel time must be reasonable and must not include diversions for personal reasons.

Example: Employee A receives an assignment from an ''extra board'' located at his home terminal to protect a job one hour's drive from the home terminal. In lieu of transporting the employee by carrier conveyance, the railroad pays the employee a fixed amount to provide his own transportation to and from the outlying point. The employee is permitted to go directly from his home to the outlying point, a drive which takes 40 minutes. The normal driving time between his regular reporting point at his home terminal and the outlying point is 60 minutes. The actual driving time, 40 minutes is considered deadhead time and is counted as time on duty under the Act.

Employee A performs local switching service at the outlying point. When the employee returns from the outlying point that evening, and receives an ''arbitrary'' payment for his making the return trip by private automobile, 40 minutes of his time in transportation home is considered deadheading to point of final release and is not counted as either time on duty or time off duty.

Wreck and relief trains. Prior to the 1976 amendments, crews of wreck and relief trains were exempted entirely from the limitations on hours of service. Under present law that is no longer the case. The crew of a wreck or relief train may be permitted to be on duty for not to exceed 4 additional hours in any period of 24 consecutive hours whenever an actual emergency exists and the work of the crew is related to that emergency. Thus, a crew could work up to 16 hours, rather than 12. The Act specifies that an emergency ceases to exist for purposes of this provision when the track is cleared and the line is open for traffic. An ''emergency''

for purposes of wreck or relief service may be a less extraordinary or catastrophic event than an ''unavoidable accident or Act of God'' under section 5(d) of the Act.

Example: The crew of a wreck train is dispatched to clear the site of a derailment which has just occurred on a main line. The wreck crew re-rails or clears the last car and the maintenance of way department releases the track to the operating department 14 hours and 30 minutes into the duty tour. Since the line is not clear until the wreck train is itself out of the way, the crew may operate the wreck train to its terminal, provided this can be accomplished within the total of 16 hours on duty.

Emergencies. The Act contains no general exception using the term ''emergency'' with respect to train or engine service or related work. See ''casualties,'' etc., under ''General Provisions''.

COMMUNICATION OF TRAIN ORDERS

Covered Service. The handling of orders governing the movement of trains is the second type of covered service. This provision of the Act applies to any operator, train dispatcher or other employee who by the use of the telegraph, telephone, radio, or any other electical or mechanical device dispatches, reports, transmits, receives, or delivers orders pertaining to or affecting train movements.

The approach of the law is functional. Thus, though a yardmaster normally is not covered by this provision, a yardmaster or other employee who performs any of the specified service during a duty tour is subject to the limitations on service for that entire tour.

Limitations on hours. No employee who performs covered service involving communication of train orders may be required or permitted to remain on duty for more than nine hours, whether consecutive or in the aggregate, in any 24-hour period in any office, tower, station or place where two or more shifts are employed. Where only one shift is employed, the employee is restricted to 12 hours consecutively or in the aggregate during any 24-hour period.

The provision on emergencies, discussed below, may extend the permissible hours of employees performing this type of service.

Shifts. The term ''shift'' is not defined by the Act, but the legislative history of the 1969 amendments indicates that it means a tour of duty constituting a day's work for one or more employee performing the same class of work at the same station who are scheduled to begin and end work at the same time. The following are examples of this principle:

Scheduled Hours	Classification
7 a.m. to 3 p.m	1 shift.
7 a.m. to 12:30 p.m. 1:30 p.m. to 8 p.m. (Schedule for one employee including one hour lunch period).	Do.
7 a.m. to 3 p.m. 7 a.m. to 3 p.m. (Two employees scheduled).	Do.
7 a.m. to 3 p.m. 8 a.m. to 4 p.m. (Two employees scheduled).	2 shifts.

Duty time and effective periods of release. If, after reporting to his place of duty, an employee is required to perform duties at other places during this same tour of duty, the time spent traveling between such places is considered as time on duty. Under the traditional administrative interpretation of section 3, other periods of transportation are viewed as personal commuting and, thus, off-duty time.

A release period is considered off-duty time if it provides a meaningful period of relaxation and if the employee is free of all responsibilities to the carrier. One hour is the minimum acceptable release period for this type of covered service.

Emergencies. The section of the Act dealing with dispatchers, operators, and others who transmit or receive train orders contains its own emergency provision. In case of emergency, an employee subject to the 9 or 12-hour limitation is permitted to work an additional four hours in any 24-hour period, but only for a maximum of three days in any period of seven consecutive days. However, even in an emergency situation the carrier must make reasonable efforts to relieve the employee.

GENERAL PROVISIONS

(APPLICABLE TO ALL COVERED SERVICE)

Commingled Service. All duty time for a railroad even though not otherwise subject to the Act must be included when computing total on-duty time of an individual who performs one or more of the type of service covered by the Act. This is known as the principle of ''commingled service''.

For example, if an employee performs duty for 8 hours as a trainman and then is used as a trackman (not covered by the law) in the same 24-hour period, total on-duty time is determined by adding the duty time as trackman to that as trainman. The law does not distinguish treatment of situations in which non-covered service follows, rather than precedes, covered service. The limitations on total hours apply on both cases. It should be remembered that attendance at required rules classes is duty time subject to the provisions on ''commingling''. Similarly, where a carrier compels attendance at a disciplinary proceeding, time spent in attendance is subject to the provisions on commingling.

When an employee performs service covered by more than one restrictive provision,

the most restrictive provision determines the total lawful on-duty time. Thus, when an employee performs duty in train or engine service and also as an operator, the provisions of the law applicable to operators apply to all on-duty and off-duty periods during such aggregate time. However, an employee subject to the 12 hour provision of section 2 of the law does not become subject to the 9 or 12-hour provisions of section 3 merely because he receives, transmits or delivers orders pertaining to or affecting the movement of his train in the course of his duties as a trainman.

Casualties, Unavoidable Accidents, Acts of God. Section 5(d) of the Act states the following: ''The provisions of this Act shall not apply in any case of casualty or unavoidable accident or the Act of God; nor where the delay was the result of a cause not known to the carrier or its officer or agent in charge of the employee at the time said employee left a terminal, and which could not have been foreseen.'' This passage is commonly referred to as the ''emergency provision''. Judicial construction of this sentence has limited the relief which it grants to situations which are truly unusual and exceptional. The courts have recognized that delays and operational difficulties are common in the industry and must be regarded as entirely foreseeable; otherwise, the Act will provide no protection whatsoever. Common operational difficulties which do not provide relief from the Act include, but are not limited to, broken draw bars, locomotive malfunctions, equipment failures, brake system failures, hot boxes, unexpected switching, doubling hills and meeting trains. Nor does the need to clear a main line or cut a crossing justify disregard of the limitations of the Act. Such contingencies must normally be anticipated and met within the 12 hours. Even where an extraordinary event or combination of events occurs which, by itself, would be sufficient to permit excess service, the carrier must still employ due diligence to avoid or limit such excess service. The burden of proof rests with the carrier to establish that excess service could not have been avoided.

Sleeping Quarters. Under the 1976 amendments to the Act it is unlawful for any common carrier to provide sleeping quarters for persons covered by the Hours of Service Act which do not afford such persons an opportunity for rest, free from interruptions caused by noise under the control of the railroad, in clean, safe, and sanitary quarters. Such sleeping quarters include crew quarters, camp or bunk cars, and trailers.

Sleeping quarters are not considered to be ''free from interruptions caused by noise under the control of the railroad'' if noise levels attributable to noise sources under the control of the railroad exceed an $L_{eq}(8)$ value of 55dB(A).

FRA recognizes that camp cars, either because of express limitations of local codes or by virtue of their physical mobility, cannot, for practical purposes, be subject to state or local housing, sanitation, health, electrical, or fire codes. Therefore, FRA is unable to rely upon state or local authorities to ensure that persons covered by the Act who reside in railroad-provided camp cars are afforded an opportunity for rest in ''clean, safe, and sanitary'' conditions. Accordingly, the guidelines in appendix C to this part 228 will be considered by FRA as factors to be used in applying the concepts of ''clean,'' ''safe,'' and ''sanitary'' to camp cars provided by railroads for the use of employees covered by section 2(a)(3) of the Act. Failure to adhere to these guidelines might interfere with the ordinary person's ability to rest.

Collective Bargaining. The Hours of Service Act prescribes the maximum permissible hours of service consistent with safety. However, the Act does not prohibit collective bargaining for shorter hours of service and time on duty.

Penalty. As amended by the Rail Safety Improvement Act of 1988 and the Rail Safety Enforcement and Review Act of 1992, the penalty provisions of the law apply to any ''person (including but not limited to a railroad; any manager, supervisor, official, or other employee or agent of a railroad; any owner, manufacturer, lessor, or lessee of railroad equipment, track, or facilities; any independent contractor providing goods or services to a railroad; and any employee of such owner, manufacturer, lessor, lessee, or independent contractor), except that a penalty may be assessed against an individual only for a willful violation. See appendix A to 49 CFR part 209. For violations that occurred on or after September 3, 1992, a person who violates the Act is liable for a civil penalty, as the Secretary of Transportation deems reasonable, in an amount not less than $500 nor more than $10,000, except that where a grossly negligent violation or a pattern of repeated violations has created an imminent hazard of death or injury to persons, or has caused death or injury, a penalty not to exceed $20,000 may be assessed.

Each employee who is required or permitted to be on duty for a longer period than prescribed by law or who does not receive a required period of rest represents a separate and distinct violation and subjects the railroad to a separate civil penalty. In the case of a violation of section 2 (a)(3) or (a)(4) of the Act, each day a facility is in noncompliance constitutes a separate offense and subjects the railroad to a separate civil penalty.

In compromising a civil penalty assessed under the Act, FRA takes into account the nature, circumstances, extent, and gravity of the violation committed, and, with respect to the person found to have committed such

violation, the degree of culpability, any history of prior or subsequent offenses, ability to pay, effect on ability to continue to do business, and such other matters as justice may require.

Statute of limitations. No suit may be brought after the expiration of two years from the date of violation unless administrative notification of the violation has been provided to the person to be charged within that two year period. In no event may a suit be brought after expiration of the period specified in 28 U.S.C. 2462.

Exemptions. A railroad which employs not more than 15 persons covered by the Hours of Service Act (including signalmen and hostlers) may be exempted from the law's requirements by the FRA after hearing and for good cause shown. The exemption must be supported by a finding that it is in the public interest and will not adversely affect safety. The exemption need not relate to all carrier employees. In no event may any employee of an exempt railroad be required or permitted to work beyond 16 hours continuously or in the aggregate within any 24-hour period. Any exemption is subject to review at least annually.

[42 FR 27596, May 31, 1977, as amended at 43 FR 30804, July 18, 1978; 53 FR 28601, July 28, 1988; 55 FR 30893, July 27, 1990; 58 FR 18165, Apr. 8, 1993; 61 FR 20495, May 7, 1996]

APPENDIX B TO PART 228—SCHEDULE OF CIVIL PENALTIES [1]

Section	Violation	Willful violation
Subpart B—Records and Reporting:		
228.9 Railroad records	$500	$1,000
228.11 Hours of duty records	500	1,000
228.17 Dispatcher's record	500	1,000
228.19 Monthly reports of excess service	1,000	2,000

[1] A penalty may be assessed against an individual only for a willful violation. The Administrator reserves the right to assess a penalty of up to $20,000 for any violation where circumstances warrant. See 49 CFR part 209, appendix A.

[53 FR 52931, Dec. 29, 1988]

APPENDIX C TO PART 228—GUIDELINES FOR CLEAN, SAFE, AND SANITARY RAILROAD PROVIDED CAMP CARS

1. *Definitions applicable to these Guidelines.*

(a) *Camp Cars* mean trailers and on-track vehicles, including outfit, camp, or bunk cars or modular homes mounted on flat cars, used to house or accommodate railroad employees. Wreck trains are not included.

(b) *Employee* means any worker whose service is covered by the Hours of Service Act or who is defined as an employee for purposes of section 2(a)(3) of that Act.

(c) *Lavatory* means a basin or similar vessel used primarily for washing of the hands, arms, face, and head.

(d) *Nonwater carriage toilet facility* means a toilet facility not connected to a sewer.

(e) *Number of employees* means the number of employees assigned to occupy the camp cars.

(f) *Personal service room* means a room used for activities not directly connected with the production or service function performed by the carrier establishment. Such activities include, but are not limited to, first-aid, medical services, dressing, showering, toilet use, washing, and eating.

(g) *Potable water* means water that meets the quality standards prescribed in the U.S. Public Health Service Drinking Water Standards, published at 42 CFR part 72, or is approved for drinking purposes by the State or local authority having jurisdiction.

(h) *Toilet facility* means a fixture maintained within a toilet room for the purpose of defecation or urination, or both.

(i) *Toilet room* means a room maintained within or on the premises containing toilet facilities for use by employees.

(j) *Toxic material* means a material in concentration or amount of such toxicity as to constitute a recognized hazard that is causing or is likely to cause death or serious physical harm.

(k) *Urinal* means a toilet facility maintained within a toilet room for the sole purpose of urination.

(l) *Water closet* means a toilet facility maintained within a toilet room for the purpose of both defecation and urination and which is flushed with water.

(m) *Leq* (8) means the equivalent steady sound level which in 8 hours would contain the same acoustic energy as the time-varying sound level during the same time period.

2. *Housekeeping.*

(a) All camp cars should be kept clean to the extent that the nature of the work allows.

(b) To facilitate cleaning, every floor, working place, and passageway should be kept free from protruding nails, splinters, loose boards, and unnecessary holes and openings.

3. *Waste Disposal.*

(a) Any exterior receptacle used for putrescible solid or liquid waste or refuse should be so constructed that it does not leak and may be thoroughly cleaned and maintained in a sanitary condition. Such a receptacle should be equipped with a solid tight-fitting cover, unless it can be maintained in a sanitary condition without a cover. This requirement does not prohibit the use of receptacles designed to permit the maintenance of a sanitary condition without regard to the aforementioned requirements.

(b) All sweepings, solid or liquid wastes, refuse, and garbage should be removed in

such a manner as to avoid creating a menace to health and as often as necessary or appropriate to maintain a sanitary condition.

4. *Vermin Control.*

(a) Camp cars should be so constructed, equipped, and maintained, so far as reasonably practicable, as to prevent the entrance or harborage of rodents, insects, or other vermin. A continuing and effective extermination program should be instituted where their presence is detected.

5. *Water Supply.*

(a) Potable water. (1) Potable water should be adequately and conveniently provided to all employees in camp cars for drinking, washing of the person, cooking, washing of foods, washing of cooking or eating utensils, washing of food preparation or processing premises, and personal service rooms where such facilities are provided.

(2) Potable drinking water dispensers should be designed, constructed, and serviced so that sanitary conditions are maintained, should be capable of being closed, and should be equipped with a tap.

(3) Open containers such as barrels, pails, or tanks for drinking water from which the water must be dipped or poured, whether or not they are fitted with a cover, should not be used.

(4) A common drinking cup and other common utensils should not be used.

(b) The distribution lines should be capable of supplying water at sufficient operating pressures to all taps for normal simultaneous operation.

6. *Toilet facilities.*

(a) Toilet facilities. (1) Toilet facilities adequate for the number of employees housed in the camp car should be provided in convenient and safe location(s), and separate toilet rooms for each sex should be provided in accordance with table l of this paragraph. The number of facilities to be provided for each sex should be based on the number of employees of that sex for whom the facilities are furnished. Where toilet rooms will be occupied by no more than one person at a time, can be locked from the inside, and contain at least one water closet or nonwater carriage toilet facility, separate toilet rooms for each sex need not be provided. Where such single-occupancy rooms have more than one toilet facility, only one such facility in each toilet room should be counted for the purpose of table 1.

TABLE 1

No. of employees	Minimum No. of toilet facilities [1]
1 to 10	1
11 to 25	2
26 to 49	3
50 to 100	5

TABLE 1—Continued

No. of employees	Minimum No. of toilet facilities [1]
Over 100	[2]

[1] Where toilet facilities will not be used by women, urinals may be provided instead of water closets or nonwater carriage toilet facilities, except that the number of water closets or facilities in such cases should not be reduced to less than ⅔ of the minimum specified.

[2] One additional fixture for each additional 25 employees.

(2) When toilet facilities are provided in separate cars, toilet rooms should have a window space of not less than 6 square feet in area opening directly to the outside area or otherwise be satisfactorily ventilated. All outside openings should be screened with material that is equivalent to or better than 16-mesh. No fixture, water closet, nonwater carriage toilet facility or urinal should be located in a compartment used for other than toilet purposes.

(3) The sewage disposal method should not endanger the health of employees.

(b) *Construction of toilet rooms.* (1) Each water closet should occupy a separate compartment with a door and walls or partitions between fixtures sufficiently high to assure privacy.

(2) Nonwater carriage toilet facilities should be located within 50 feet, but as far as practical on the same side of the track on which camp cars are sited.

(3) Each toilet facility should be lighted naturally, or artificially by a safe type of lighting available at all hours of the day and night. Flashlights can be substituted by the railroad when nonwater carriage toilet facilities are used.

(4) An adequate supply of toilet paper should be provided in each water closet, or nonwater carriage toilet facility, unless provided to the employees individually.

(5) Toilet facilities should be kept in a clean and sanitary condition. They should be cleaned regularly when occupied. In the case of nonwater carriage toilet facilities, they should be cleaned and changed regularly.

7. *Lavatories.*

(a) Lavatories should be made available to all rail employees housed in camp cars.

(b) Each lavatory should be provided with either hot and cold running water or tepid running water.

(c) Unless otherwise provided by agreement, hand soap or similar cleansing agents should be provided.

(d) Unless otherwise provided by agreement, individual hand towels or sections thereof, of cloth or paper, warm air blowers or clean individual sections of continuous cloth toweling, convenient to the lavatories, should be provided.

(e) One lavatory basin per six employees should be provided in shared facilities.

8. *Showering facilities.*

(a) Showering facilities should be provided in the following ratio: one shower should be provided for each 10 employees of each sex, or numerical fraction thereof, who are required to shower during the same shift.

(b) Shower floors should be constructed of non-slippery materials. Floor drains should be provided in all shower baths and shower rooms to remove waste water and facilitate cleaning. All junctions of the curbing and the floor should be sealed. The walls and partitions of shower rooms should be smooth and impervious to the height of splash.

(c) An adequate supply of hot and cold running water should be provided for showering purposes. Facilities for heating water should be provided.

(d) Showers. 1. Unless otherwise provided by agreement, body soap or other appropriate cleansing agent convenient to the showers should be provided.

2. Showers should be provided with hot and cold water feeding a common discharge line.

3. Unless otherwise provided by agreement, employees who use showers should be provided with individual clean towels.

9. *Kitchens, dining hall and feeding facilities.*

(a) In all camp cars where central dining operations are provided, the food handling facilities should be clean and sanitary.

(b) When separate kitchen and dining hall cars are provided, there should be a closable door between the living or sleeping quarters into a kitchen or dining hall car.

10. *Consumption of food and beverages on the premises.*

(a) *Application.* This paragraph should apply only where employees are permitted to consume food or beverages, or both, on the premises.

(b) *Eating and drinking areas.* No employee should be allowed to consume food or beverages in a toilet room or in any area exposed to a toxic material.

(c) *Sewage disposal facilities.* All sewer lines and floor drains from camp cars should be connected to public sewers where available and practical, unless the cars are equipped with holding tanks that are emptied in a sanitary manner.

(d) *Waste disposal containers provided for the interior of camp cars.* An adequate number of receptacles constructed of smooth, corrosion resistant, easily cleanable, or disposable materials, should be provided and used for the disposal of waste food. Receptacles should be provided with a solid tightfitting cover unless sanitary conditions can be maintained without use of a cover. The number, size and location of such receptacles should encourage their use and not result in overfilling. They should be emptied regularly and maintained in a clean and sanitary condition.

(e) *Sanitary storage.* No food or beverages should be stored in toilet rooms or in an area exposed to a toxic material.

(f) *Food handling.* (1) All employee food service facilities and operations should be carried out in accordance with sound hygienic principles. In all places of employment where all or part of the food service is provided, the food dispensed should be wholesome, free from spoilage, and should be processed, prepared, handled, and stored in such a manner as to be protected against contamination.

(2) No person with any disease communicable through contact with food or food preparation items should be employed or permitted to work in the preparation, cooking, serving, or other handling of food, foodstuffs, or materials used therein, in a kitchen or dining facility operated in or in connection with camp cars.

11. *Lighting.* Each habitable room in a camp car should be provided with adequate lighting.

12. *First Aid.* Adequate first aid kits should be maintained and made available for railway employees housed in camp cars for the emergency treatment of injured persons.

13. *Shelter.*

(a) Every camp car should be constructed in a manner that will provide protection against the elements.

(b) All steps, entry ways, passageways and corridors providing normal entry to or between camp cars should be constructed of durable weather resistant material and properly maintained. Any broken or unsafe fixtures or components in need of repair should be repaired or replaced promptly.

(c) Each camp car used for sleeping purposes should contain at least 48 square feet of floor space for each occupant. At least a 7-foot ceiling measured at the entrance to the car should be provided.

(d) Beds, cots, or bunks and suitable storage facilities such as wall lockers or space for foot lockers for clothing and personal articles should be provided in every room used for sleeping purposes. Except where partitions are provided, such beds or similar facilities should be spaced not closer than 36 inches laterally (except in modular units which cannot be spaced closer than 30 inches) and 30 inches end to end, and should be elevated at least 12 inches from the floor. If double-deck bunks are used, they should be spaced not less than 48 inches both laterally and end to end. The minimum clear space between the lower and upper bunk should be not less than 27 inches. Triple-deck bunks should not be used.

(e) Floors should be of smooth and tight construction and should be kept in good repair.

(f) All living quarters should be provided with windows the total of which should be not less than 10 percent of the floor area. At least one-half of each window designed to be opened should be so constructed that it can

be opened for purposes of ventilation. Durable opaque window coverings should be provided to reduce the entrance of light during sleeping hours.

(g) All exterior openings should be effectively screened with 16-mesh material. All screen doors should be equipped with self-closing devices.

(h) In a facility where workers cook, live, and sleep, a minimum of 90 square feet per person should be provided. Sanitary facilities should be provided for storing and preparing food.

(i) In camp cars where meals are provided, adequate facilities to feed employees within a 60-minute period should be provided.

(j) All heating, cooking, ventilation, air conditioning and water heating equipment should be installed in accordance with applicable local regulations governing such installations.

(k) Every camp car should be provided with equipment capable of maintaining a temperature of at least 68 degrees F. during normal cold weather and no greater than 78 degrees F., or 20 degrees below ambient, whichever is warmer, during normal hot weather.

(l) Existing camp cars may be grandfathered so as to only be subject to subparagraphs (c), (d), (f), (h), and (k), in accordance with the following as recommended maximums:

13 (c), (d), and (h)—by January 1, 1994.

13(f)—Indefinitely insofar as the ten percent (10%) requirement for window spacing is concerned.

13(k)—by January 1, 1992.

14. *Location.* Camp cars occupied exclusively by individuals employed for the purpose of maintaining the right-of-way of a railroad should be located as far as practical from where ''switching or humping operations'' of ''placarded cars'' occur, as defined in 49 CFR 228.101 (c)(3) and (c)(4), respectively. Every reasonable effort should be made to locate these camp cars at least one-half mile (2,640 feet) from where such switching or humping occurs. In the event employees housed in camp cars located closer than one-half mile (2,640 feet) from where such switching or humping of cars takes place are exposed to an unusual hazard at such location, the employees involved should be housed in other suitable accommodations. An unusual hazard means an unsafe condition created by an occurrence other than normal switching or humping.

15. *General provisions.* (a) Sleeping quarters are not considered to be ''free of interruptions caused by noise under the control of the railroad'' if noise levels attributable to noise sources under the control of the railroad exceed an Leq (8) value of 55 dB(A), with windows closed and exclusive of cooling, heating, and ventilating equipment.

(b) A railroad should, within 48 hours after notice of noncompliance with these recommendations, fix the deficient condition(s). Where holidays or weekends intervene, the railroad should fix the condition within 8 hours after the employees return to work. In the event such condition(s) affects the safety or health of the employees, such as water, cooling, heating or eating facilities, the railroad should provide alternative arrangements for housing and eating until the non-complying condition is fixed.

[55 FR 30893, July 27, 1990]

PART 229—RAILROAD LOCOMOTIVE SAFETY STANDARDS

Subpart A—General

Sec.
229.1 Scope.
229.3 Applicability.
229.4 Information collection.
229.5 Definitions.
229.7 Prohibited acts.
229.9 Movement of non-complying locomotives.
229.11 Locomotive identification.
229.13 Control of locomotives.
229.14 Non-MU control cab locomotives.
229.17 Accident reports.
229.19 Prior waivers.

Subpart B—Inspections and Tests

229.21 Daily inspection.
229.23 Periodic inspection: General.
229.25 Tests: Every periodic inspection.
229.27 Annual tests.
229.29 Biennial tests.
229.31 Main reservoir tests.
229.33 Out-of-use credit.

Subpart C—Safety Requirements

GENERAL REQUIREMENTS

229.41 Protection against personal injury.
229.43 Exhaust and battery gases.
229.45 General condition.

BRAKE SYSTEM

229.46 Brakes: General.
229.47 Emergency brake valve.
229.49 Main reservoir system.
229.51 Aluminum main reservoirs.
229.53 Brake gauges.
229.55 Piston travel.
229.57 Foundation brake gear.
229.59 Leakage.

DRAFT SYSTEM

229.61 Draft system.

SUSPENSION SYSTEM

229.63 Lateral motion.

229.64 Plain bearings.
229.65 Spring rigging.
229.67 Trucks.
229.69 Side bearings.
229.71 Clearance above top of rail.
229.73 Wheel sets.
229.75 Wheel and tire defects.

ELECTRICAL SYSTEM

229.77 Current collectors.
229.79 Third rail shoes.
229.81 Emergency pole; shoe insulation.
229.83 Insulation or grounding of metal parts.
229.85 Doors and cover plates marked ''Danger''.
229.87 Hand-operated switches.
229.89 Jumpers; cable connections.
229.91 Motors and generators.

INTERNAL COMBUSTION EQUIPMENT

229.93 Safety cut-off device.
229.95 Venting.
229.97 Grounding fuel tanks.
229.99 Safety hangers.
229.101 Engines.

STEAM GENERATORS

229.103 Safe working pressure; factor of safety.
229.105 Steam generator number.
229.107 Pressure gauge.
229.109 Safety valves.
229.111 Water-flow indicator.
229.113 Warning notice.

CABS AND CAB EQUIPMENT

229.115 Slip/slide alarms.
229.117 Speed indicators.
229.119 Cabs, floors, and passageways.
229.121 Locomotive cab noise.
229.123 Pilots, snowplows, end plates.
229.125 Headlights and auxiliary lights.
229.127 Cab lights.
229.129 Audible warning device.
229.131 Sanders.
229.133 Interim locomotive conspicuity measures—auxiliary external lights.
229.135 Event recorders.

Subpart D—Design Requirements

229.141 Body structure, MU locomotives.

APPENDIX A TO PART 229—FORM FRA—6180–49A [NOTE]
APPENDIX B TO PART 229—SCHEDULE OF CIVIL PENALTIES
APPENDIX C TO PART 229—FRA LOCOMOTIVE STANDARDS—CODE OF DEFECTS [NOTE]

AUTHORITY: 49 U.S.C. 20102–20103, 20110–20112, 20114, 20133, 20137, 20138, 20143, 20301–20303, 20306, 20701–20703, 21301- 21302, 21304, 21306, and 21311; 49 CFR 1.49 (c), (g) and (m).

SOURCE: 45 FR 21109, Mar. 31, 1980, unless otherwise noted.

Subpart A—General

§ 229.1 Scope.

This part prescribes minimum Federal safety standards for all locomotives except those propelled by steam power.

§ 229.3 Applicability.

(a) Except as provided in paragraph (b), this part applies to all standard gage railroads.

(b) This part does not apply to:

(1) A railroad that operates only on track inside an installation which is not part of the general railroad system of transportation; or

(2) Rapid transit operations in an urban area that are not connected with the general railroad system of transportation.

[54 FR 33229, Aug. 14, 1989]

§ 229.4 Information collection.

(a) The information collection requirements in this part have been reviewed by the Office of Management and Budget pursuant to the Paperwork Reduction Act of 1980, Public Law 96–511, and have been assigned OMB control number 2130–0004.

(b) The information collection requirements are found in the following sections:

(1) Section 229.9.
(2) Section 229.17.
(3) Section 229.21.
(4) Section 229.23.
(5) Section 229.25.
(6) Section 229.27.
(7) Section 229.29.
(8) Section 229.31.
(9) Section 229.33.
(10) Section 229.55.
(11) Section 229.103.
(12) Section 229.105.
(13) Section 229.113.
(14) Section 229.135.

[50 FR 6953, Feb. 19, 1985, as amended at 58 FR 36613, July 8, 1993]

§ 229.5 Definitions.

As used in this part—

(a) *Break* means a fracture resulting in complete separation into parts.

(b) *Cab* means that portion of the superstructure designed to be occupied by the crew operating the locomotive.

(c) *Carrier* means *railroad,* as that term is defined below.

(d) *Control cab locomotive* means a locomotive without propelling motors but with one or more control stands.

(e) *Crack* means a fracture without complete separation into parts, except that castings with shrinkage cracks or hot tears that do not significantly diminish the strength of the member are not considered to be cracked.

(f) *Dead locomotive* means—

(1) A locomotive other than a control cab locomotive that does not have any traction device supplying tractive power; or

(2) A control cab locomotive that has a locked and unoccupied cab.

(g) *Event recorder* means a device, designed to resist tampering, that monitors and records data on train speed, direction of motion, time, distance, throttle position, brake applications and operations (including train brake, independent brake, and, if so equipped, dynamic brake applications and operations) and, where the locomotive is so equipped, cab signal aspect(s), over the most recent 48 hours of operation of the electrical system of the locomotive on which it is installed. A device, designed to resist tampering, that monitors and records the specified data only when the locomotive is in motion shall be deemed to meet this definition provided the device was installed prior to [insert the effective date of the rule] and records the specified data for the last eight hours the locomotive was in motion.

(h) *High voltage* means an electrical potential of more than 150 volts.

(i) *In-service event recorder* means an event recorder that was successfully tested as prescribed in §229.25(e) and whose subsequent failure to operate as intended, if any, is not actually known by the railroad operating the locomotive on which it is installed.

(j) *Lite locomotive* means a locomotive or a consist of locomotives not attached to any piece of equipment or attached only to a caboose.

(k) *Locomotive* means a piece of on-track equipment other than hi-rail, specialized maintenance, or other similar equipment—

(1) With one or more propelling motors designed for moving other equipment;

(2) With one or more propelling motors designed to carry freight or passenger traffic or both; or

(3) Without propelling motors but with one or more control stands.

(l) *MU locomotive* means a multiple operated electric locomotive described in paragraph (i)(2) or (3) of this section.

(m) *Powered axle* is an axle equipped with a traction device.

(n) *Railroad* means all forms of non-highway ground transportation that run on rails or electromagnetic guideways, including (1) commuter or other short-haul rail passenger service in a metropolitan or suburban area, and (2) high speed ground transportation systems that connect metropolitan areas, without regard to whether they use new technologies not associated with traditional railroads. Such term does not include rapid transit operations within an urban area that are not connected to the general railroad system of transportation.

(o) *Serious injury* means an injury that results in the amputation of any appendage, the loss of sight in an eye, the fracture of a bone, or the confinement in a hospital for a period of more than 24 consecutive hours.

[45 FR 21109, Mar. 31, 1980, as amended at 54 FR 33229, Aug. 14, 1989; 58 FR 36613, July 8, 1993; 60 FR 27905, May 26, 1995]

§229.7 Prohibited acts.

(a) The Locomotive Inspection Act (45 U.S.C. 22–34) makes it unlawful for any carrier to use or permit to be used on its line any locomotive unless the entire locomotive and its appurtenances—

(1) Are in proper condition and safe to operate in the service to which they are put, without unnecessary peril to life or limb; and

(2) Have been inspected and tested as required by this part.

(b) Any person (including a railroad subject to this part and any manager, supervisor, official, or other employee or agent of such a railroad) who violates any requirement of this part or of the Locomotive Inspection Act or causes the violation of any such requirement is subject to a civil penalty

of at least $250 and not more than $10,000 per violation, except that: Penalties may be assessed against individuals only for willful violations, and, where a grossly negligent violation or a pattern of repeated violations has created an imminent hazard of death or injury to persons, or has caused death or injury, a penalty not to exceed $20,000 per violation may be assessed. Each day a violation continues shall constitute a separate offense. See appendix B to this part for a statement of agency civil penalty policy.

[45 FR 21109, Mar. 31, 1980, as amended at 53 FR 28601, July 28, 1988; 53 FR 52931, Dec. 29, 1988]

§ 229.9 Movement of non-complying locomotives.

(a) Except as provided in paragraphs (b), (c) and § 229.125(h), a locomotive with one or more conditions not in compliance with this part may be moved only as a lite locomotive or a dead locomotive after the carrier has complied with the following:

(1) A qualified person shall determine—

(i) That it is safe to move the locomotive; and

(ii) The maximum speed and other restrictions necessary for safely conducting the movement;

(2)(i) The engineer in charge of the movement of the locomotive shall be notified in writing and inform all other crew members in the cab of the presence of the non-complying locomotive and the maximum speed and other restrictions determined under paragraph (a)(1)(ii) of this section.

(ii) A copy of the tag described in paragraph (a)(3) of this section may be used to provide the notification required by paragraph (a)(2)(i) of this section.

(3) A tag bearing the words ''non-complying locomotive'' and containing the following information, shall be securely attached to the control stand on each MU or control cab locomotive and to the isolation switch or near the engine start switch on every other type of locomotive—

(i) The locomotive number;

(ii) The name of the inspecting carrier;

(iii) The inspection location and date;

(iv) The nature of each defect;

(v) Movement restrictions, if any;

(vi) The destination; and

(vii) The signature of the person making the determinations required by this paragraph.

(b) A locomotive that develops a non-complying condition enroute may continue to utilize its propelling motors, if the requirements of paragraph (a) are otherwise fully met, until the earlier of—

(1) The next calendar day inspection, or

(2) The nearest forward point where the repairs necessary to bring it into compliance can be made.

(c) A non-complying locomotive may be moved lite or dead within a yard, at speeds not in excess of 10 miles per hour, without meeting the requirements of paragraph (a) of this section if the movement is solely for the purpose of repair. The carrier is responsible to insure that the movement may be safely made.

(d) A dead locomotive may not continue in use following a calendar day inspection as a controlling locomotive or at the head of a train or locomotive consist.

(e) A locomotive does not cease to be a locomotive because its propelling motor or motors are inoperative or because its control jumper cables are not connected.

(f) Nothing in this section authorizes the movement of a locomotive subject to a Special Notice for Repair unless the movement is made in accordance with the restrictions contained in the Special Notice.

[45 FR 21109, Mar. 31, 1980, as amended at 61 FR 8887, Mar. 6, 1996]

§ 229.11 Locomotive identification.

(a) The letter ''F'' shall be legibly shown on each side of every locomotive near the end which for identification purposes will be known as the front end.

(b) The locomotive number shall be displayed in clearly legible numbers on each side of each locomotive.

§229.13 Control of locomotives.

Except when a locomotive is moved in accordance with §229.9, whenever two or more locomotives are coupled in remote or multiple control, the propulsion system, the sanders, and the power brake system of each locomotive shall respond to control from the cab of the controlling locomotive. If a dynamic brake or regenerative brake system is in use, that portion of the system in use shall respond to control from the cab of the controlling locomotive.

§229.14 Non-MU control cab locomotives.

On each non-MU control cab locomotive, only those components added to the passenger car that enable it to serve as a lead locomotive, control the locomotive actually providing tractive power, and otherwise control the movement of the train, are subject to this part.

§229.17 Accident reports.

(a) In the case of an accident due to a failure from any cause of a locomotive or any part or appurtenance of a locomotive, or a person coming in contact with an electrically energized part or appurtenance, that results in serious injury or death of one or more persons, the carrier operating the locomotive shall immediately report the accident by toll free telephone, Area Code 800–424–0201. The report shall state the nature of the accident, number of persons killed or seriously injured, the place at which it occurred, the location at which the locomotive or the affected parts may be inspected by the FRA, and the name, title and phone number of the person making the call. The locomotive or the part or parts affected by the accident shall be preserved intact by the carrier until after the FRA inspection.

(b) Written confirmation of the oral report required by paragraph (a) of this section shall be immediately mailed to the Federal Railroad Administration, RRS–25, Washington, DC 20590, and contain a detailed description of the accident, including to the extent known, the causes and the number of persons killed and injured. The written report required by this paragraph is in addition to the reporting requirements of 49 CFR part 225.

§229.19 Prior waivers.

All waivers of every form and type from any requirement of any order or regulation implementing the Locomotive Inspection Act, applicable to one or more locomotives except those propelled by steam power, shall lapse on August 31, 1980, unless a copy of the grant of waiver is filed prior to that date with the Office of Safety (RRS–23), Federal Railroad Administration, Washington, DC 20590.

Subpart B—Inspections and Tests

§229.21 Daily inspection.

(a) Except for MU locomotives, each locomotive in use shall be inspected at least once during each calendar day. A written report of the inspection shall be made. This report shall contain the name of the carrier; the initials and number of the locomotive; the place, date and time of the inspection; a description of the non-complying conditions disclosed by the inspection; and the signature of the employee making the inspection. Except as provided in §229.9, any conditions that constitute non-compliance with any requirement of this part shall be repaired before the locomotive is used. A notation shall be made on the report indicating the nature of the repairs that have been made. The person making the repairs shall sign the report. The report shall be filed and retained for at least 92 days in the office of the carrier at the terminal at which the locomotive is cared for. A record shall be maintained on each locomotive showing the place, date and time of the previous inspection.

(b) Each MU locomotive in use shall be inspected at least once during each calendar day and a written report of the inspection shall be made. This report may be part of a single master report covering an entire group of MU's. If any non-complying conditions are found, a separate, individual report shall be made containing the name of the carrier; the initials and number of the locomotive; the place, date, and

time of the inspection; the non-complying conditions found; and the signature of the inspector. Except as provided in § 229.9, any conditions that constitute non-compliance with any requirement of this part shall be repaired before the locomotive is used. A notation shall be made on the report indicating the nature of the repairs that have been made. The person making the repairs shall sign the report. The report shall be filed in the office of the carrier at the place where the inspection is made or at one central location and retained for at least 92 days.

(c) Each carrier shall designate qualified persons to make the inspections required by this section.

[45 FR 21109, Mar. 31, 1980, as amended at 50 FR 6953, Feb. 19, 1985]

§ 229.23 Periodic inspection: General.

(a) Each locomotive and steam generator shall be inspected at each periodic inspection to determine whether it complies with this part. Except as provided in § 229.9, all non-complying conditions shall be repaired before the locomotive or the steam generator is used. Except as provided in § 229.33, the interval between any two periodic inspections may not exceed 92 days. Periodic inspections shall only be made where adequate facilities are available. At each periodic inspection, a locomotive shall be positioned so that a person may safely inspect the entire underneath portion of the locomotive.

(b) The periodic inspection of the steam generator may be postponed indefinitely if the water suction pipe to the water pump and the leads to the main switch (steam generator switch) are disconnected, and the train line shut-off-valve is wired closed or a blind gasket applied. However, the steam generator shall be so inspected before it is returned to use.

(c) After April 30, 1980, each new locomotive shall receive an initial periodic inspection before it is used. Except as provided in § 229.33, each locomotive in use on or before April 30, 1980, shall receive an initial periodic inspection within 92 days of the last 30-day inspection performed under the prior rules (49 CFR 230.331 and 230.451). At the initial periodic inspection, the date and place of the last tests performed that are the equivalent of the tests required by §§ 229.27, 229.29, and 229.31 shall be entered on Form FRA F 6180–49A. These dates shall determine when the tests first become due under §§ 229.27, 229.29, and 229.31. Out of use credit may be carried over from Form FRA F 6180–49 and entered on Form FRA F 6180–49A.

(d) Each periodic inspection shall be recorded on Form FRA F 6180–49A. The form shall be signed by the person conducting the inspection and certified by that person's supervisor that the work was done. The form shall be displayed under a transparent cover in a conspicuous place in the cab of each locomotive.

(e) At the first periodic inspection in each calendar year the carrier shall remove from each locomotive Form FRA F 6180–49A covering the previous calendar year. If a locomotive does not receive its first periodic inspection in a calendar year before April 2 because it is out of use, the form shall be promptly replaced. The Form FRA F 6180–49A covering the preceding year for each locomotive, in or out of use, shall be signed by the railroad official responsible for the locomotive and filed as required in § 229.23(f). The date and place of the last periodic inspection and the date and place of the last test performed under §§ 229.27, 229.29, and 229.31 shall be transferred to the replacement Form FRA F 6180–49A.

(f) The mechanical officer of each railroad who is in charge of a locomotive shall maintain in his office a secondary record of the information reported on Form FRA F 6180–49A under this part. The secondary record shall be retained until Form FRA F 6180–49A has been removed from the locomotive and filed in the railroad office of the mechanical officer in charge of the locomotive. If the Form FRA F 6180–49A removed from the locomotive is not clearly legible, the secondary record shall be retained until the Form FRA F 6180–49A for the succeeding year is filed. The Form F 6180–49A removed from a locomotive shall be retained until the Form FRA F 6180–49A for the succeeding year is filed.

[45 FR 21109, Mar. 31, 1980, as amended at 45 FR 39852, June 12, 1980; 50 FR 6953, Feb. 19, 1985]

§229.25 Tests: Every periodic inspection.

Each periodic inspection shall include the following:

(a) All gauges used by the engineer for braking the train or locomotive, except load meters used in conjunction with an auxiliary brake system, shall be tested by comparison with a deadweight tester or a test gauge designed for this purpose.

(b) All electrical devices and visible insulation shall be inspected.

(c) All cable connections between locomotives and jumpers that are designed to carry 600 volts or more shall be thoroughly cleaned, inspected, and tested for continuity.

(d) Each steam generator that is not isolated as prescribed in §229.23(b) shall be inspected and tested as follows:

(1) All automatic controls, alarms and protective devices shall be inspected and tested.

(2) Steam pressure gauges shall be tested by comparison with a deadweight tester or a test gauge designed for this purpose. The siphons to the steam gauges shall be removed and their connections examined to determine that they are open.

(3) Safety valves shall be set and tested under steam after the steam pressure gauge is tested.

(e) The event recorder, if installed, shall be inspected, maintained, and tested in accordance with the instructions of the manufacturer, supplier, or owner thereof and in accordance with the following criteria:

(1) A written copy of the instructions in use shall be kept at the point where the work is performed.

(2) The event recorder shall be tested prior to performing any maintenance work on it. At a minimum, the event recorder test shall include cycling all required recording parameters and determining the full range of each parameter by reading out recorded data. A micro-processor based event recorder, equipped to perform self-tests, has passed the pre-maintenance inspection requirement if it has not indicated a failure.

(3) If this test does not reveal that the device is recording all the specified data and that all recordings are within the designed recording parameters, this fact shall be noted on the data verification result required to be maintained by this section and maintenance and testing shall be performed as necessary until a subsequent test is successful.

(4) When a successful test is accomplished, a copy of those data verification results shall be maintained with the locomotive's maintenance records until the next one is filed.

(5) A railroad's event recorder periodic maintenance shall be considered effective if ninety percent (90%) of the recorders inbound in any given month for periodic inspection are still fully functional; maintenance practices and test intervals shall be adjusted as necessary to yield effective periodic maintenance.

[45 FR 21109, Mar. 31, 1980, as amended at 58 FR 36614, July 8, 1993; 60 FR 27905, May 26, 1995]

§229.27 Annual tests.

Each locomotive shall be subjected to the tests and inspections included in paragraphs (b) and (c) of this section, and each non-MU locomotive shall also be subjected to the tests and inspections included in paragraph (a) of this section, at intervals that do not exceed 368 calendar days:

(a)(1) The filtering devices or dirt collectors located in the main reservoir supply line to the air brake system shall be cleaned, repaired, or replaced.

(2) Brake cylinder relay valve portions, main reservoir safety valves, brake pipe vent valve portions, feed and reducing valve portions in the air brake system (including related dirt collectors and filters) shall be cleaned, repaired, and tested.

(3) The date and place of the cleaning, repairing, and testing shall be recorded on Form FRA F 6180–49A and the person performing the work and that person's supervisor shall sign the form. A record of the parts of the air brake system that are cleaned, repaired, and tested shall be kept in the carrier's files or in the cab of the locomotive.

(4) At its option, a carrier may fragment the work required by this paragraph. In that event, a separate air record shall be maintained under a transparent cover in the cab. The air record shall include the locomotive

number, a list of the air brake components, and the date and place of the last inspection and test of each component. The signature of the person performing the work and the signature of that person's supervisor shall be included for each component. A duplicate record shall be maintained in the carrier's files.

(b) Load meters shall be tested. Errors of less than five percent do not have to be corrected. The date and place of the test shall be recorded on Form FRA F 6180–49A and the person conducting the test and that person's supervisor shall sign the form.

(c) Each steam generator that is not isolated as prescribed in § 229.23(b), shall be subjected to a hydrostatic pressure at least 25 percent above the working pressure and the visual return water-flow indicator shall be removed and inspected.

§ 229.29 Biennial tests.

(a) Except for the valves and valve portions on non-MU locomotives that are cleaned, repaired, and tested as prescribed in § 229.27(a), all valves, valve portions, MU locomotive brake cylinders and electric-pneumatic master controllers in the air brake system (including related dirt collectors and filters) shall be cleaned, repaired, and tested at intervals that do not exceed 736 calendar days. The date and place of the cleaning, repairing, and testing shall be recorded on Form FRA F 6180–49A, and the person performing the work and that person's supervisor shall sign the form. A record of the parts of the air brake system that are cleaned, repaired, and tested shall be kept in the carrier's files or in the cab of the locomotive.

(b) At its option, a carrier may fragment the work required by this section. In that event, a separate air record shall be maintained under a transparent cover in the cab. The air record shall include the locomotive number, a list of the air brake components, and the date and place of the inspection and test of each component. The signature of the person performing the work and the signature of that person's supervisor shall be included for each component. A duplicate record shall be maintained in the carrier's files.

§ 229.31 Main reservoir tests.

(a) Except as provided in paragraph (c) of this section, before it is put in service and at intervals that do not exceed 736 calendar days, each main reservoir other than an aluminum reservoir shall be subjected to a hydrostatic pressure of at least 25 percent more than the maximum working pressure fixed by the chief mechanical officer. The test date, place, and pressure shall be recorded on Form FRA F 6180–49A, and the person performing the test and that person's supervisor shall sign the form.

(b) Except as provided in paragraph (c) of this section, each main reservoir other than an aluminum reservoir shall be hammer tested over its entire surface while the reservoir is empty at intervals that do not exceed 736 calendar days. The test date and place shall be recorded on Form FRA F 6180–49A, and the person performing the test and that person's supervisor shall sign the form.

(c) Each welded main reservoir originally constructed to withstand at least five times the maximum working pressure fixed by the chief mechanical officer may be drilled over its entire surface with telltale holes that are three-sixteenths of an inch in diameter. The holes shall be spaced not more than 12 inches apart, measured both longitudinally and circumferentially, and drilled from the outer surface to an extreme depth determined by the formula—

$$D=(.6PR/(S-0.6P))$$

where:

D=extreme depth of telltale holes in inches but in no case less than one-sixteenth inch;

P=certified working pressure in pounds per square inch;

S=one-fifth of the minimum specified tensile strength of the material in pounds per square inch; and

R=inside radius of the reservoir in inches.

One row of holes shall be drilled lengthwise of the reservoir on a line intersecting the drain opening. A reservoir so drilled does not have to meet the requirements of paragraphs (a) and

(b) of this section, except the requirement for a hydrostatic test before it is placed in use. Whenever any such telltale hole shall have penetrated the interior of any reservoir, the reservoir shall be permanently withdrawn from service. A reservoir now in use may be drilled in lieu of the tests provided for by paragraphs (a) and (b) of this section, but it shall receive a hydrostatic test before it is returned to use.

(d) Each aluminum main reservoir before being placed in use and at intervals that do not exceed 736 calendar days thereafter, shall be—

(1) Cleaned and given a thorough visual inspection of all internal and external surfaces for evidence of defects or deterioration; and

(2) Subjected to a hydrostatic pressure at least twice the maximum working pressure fixed by the chief mechanical officer, but not less than 250 p.s.i. The test date, place, and pressure shall be recorded on Form FRA F 6180–49A, and the person conducting the test and that person's supervisor shall sign the form.

§229.33 Out-of-use credit.

When a locomotive is out of use for 30 or more consecutive days or is out of use when it is due for any test or inspection required by §229.23, 229.25, 229.27, 229.29, or 229.31, an out-of-use notation showing the number of out-of-use days shall be made on an inspection line on Form FRA F 6180–49A. A supervisory employee of the carrier who is responsible for the locomotive shall attest to the notation. If the locomotive is out of use for one or more periods of at least 30 consecutive days each, the interval prescribed for any test or inspection under this part may be extended by the number of days in each period the locomotive is out of use since the last test or inspection in question. A movement made in accordance with §229.9 is not a use for purposes of determining the period of the out-of-use credit.

Subpart C—Safety Requirements

GENERAL REQUIREMENTS

§229.41 Protection against personal injury.

Fan openings, exposed gears and pinions, exposed moving parts of mechanisms, pipes carrying hot gases and high-voltage equipment, switches, circuit breakers, contactors, relays, grid resistors, and fuses shall be in non-hazardous locations or equipped with guards to prevent personal injury.

§229.43 Exhaust and battery gases.

(a) Products of combustion shall be released entirely outside the cab and other compartments. Exhaust stacks shall be of sufficient height or other means provided to prevent entry of products of combustion into the cab or other compartments under usual operating conditions.

(b) Battery containers shall be vented and batteries kept from gassing excessively.

§229.45 General condition.

All systems and components on a locomotive shall be free of conditions that endanger the safety of the crew, locomotive or train. These conditions include: insecure attachment of components, including third rail shoes or beams, traction motors and motor gear cases, and fuel tanks; fuel, oil, water, steam, and other leaks and accumulations of oil on electrical equipment that create a personal injury hazard; improper functioning of components, including slack adjusters, pantograph operating cylinders, circuit breakers, contactors, relays, switches, and fuses; and cracks, breaks, excessive wear and other structural infirmities of components, including quill drives, axles, gears, pinions, pantograph shoes and horns, third rail beams, traction motor gear cases, and fuel tanks.

BRAKE SYSTEM

§ 229.46 Brakes: General.

The carrier shall know before each trip that the locomotive brakes and devices for regulating all pressures, including but not limited to the automatic and independent brake valves, operate as intended and that the water and oil have been drained from the air brake system.

§ 229.47 Emergency brake valve.

(a) Except for locomotives with cabs designed for occupancy by only one person, each road locomotive shall be equipped with a brake pipe valve that is accessible to a member of the crew, other than the engineer, from that crew member's position in the cab. On car body type locomotives, a brake pipe valve shall be attached to the wall adjacent to each end exit door. The words ''Emergency Brake Valve'' shall be legibly stenciled or marked near each brake pipe valve or shall be shown on an adjacent badge plate.

(b) MU and control cab locomotives operated in road service shall be equipped with an emergency brake valve that is accessible to another crew member in the passenger compartment or vestibule. The words ''Emergency Brake Valve'' shall be legibly stenciled or marked near each valve or shall be shown on an adjacent badge plate.

§ 229.49 Main reservoir system.

(a)(1) The main reservoir system of each locomotive shall be equipped with at least one safety valve that shall prevent an accumulation of pressure of more than 15 pounds per square inch above the maximum working air pressure fixed by the chief mechanical officer of the carrier operating the locomotive.

(2) Except for non-equipped MU locomotives built prior to January 1, 1981, each locomotive that has a pneumatically actuated system of power controls shall be equipped with a separate reservoir of air under pressure to be used for operating those power controls. The reservoir shall be provided with means to automatically prevent the loss of pressure in the event of a failure of main air pressure, have storage capacity for not less than three complete operating cycles of control equipment and be located where it is not exposed to damage.

(b) A governor shall be provided that stops and starts or unloads and loads the air compressor within 5 pounds per square inch above or below the maximum working air pressure fixed by the carrier.

(c) Each compressor governor used in connection with the automatic air brake system shall be adjusted so that the compressor will start when the main reservoir pressure is not less than 15 pounds per square inch above the maximum brake pipe pressure fixed by the carrier and will not stop the compressor until the reservoir pressure has increased at least 10 pounds.

§ 229.51 Aluminum main reservoirs.

(a) Aluminum main reservoirs used on locomotives shall be designed and fabricated as follows:

(1) The heads and shell shall be made of Aluminum Association Alloy No. 5083–0, produced in accordance with American Society of Mechnical Engineers (ASME) Specification SB–209, as defined in the ''ASME Boiler and Pressure Vessel Code'' (1971 edition), section II, Part B, page 123, with a minimum tensile strength of 40,000 p.s.i. (40 k.s.i.).

(2) Each aluminum main reservoir shall be designed and fabricated in accordance with the ''ASME Boiler and Pressure Vessel Code,'' section VIII, Division I (1971 edition), except as otherwise provided in this part.

(3) An aluminum main reservoir shall be constructed to withstand at least five times its maximum working pressure or 800 p.s.i., whichever is greater.

(4) Each aluminum main reservoir shall have at least two inspection openings to permit complete circumferential visual observation of the interior surface. On reservoirs less than 18 inches in diameter, the size of each inspection opening shall be at least that of 1½-inch threaded iron pipe, and on reservoirs 18 or more inches in diameter, the size of each opening shall be at least that of 2-inch threaded iron pipe.

(b) The following publications, which contain the industry standards incorporated by reference in paragraph (a) of this section, may be obtained from the

publishers and are also on file in the Office of Safety of the Federal Railroad Administration, Washington, DC 20590. Sections II and VIII of the ''ASME Boiler and Pressure Vessel Code'' (1971 edition) are published by the American Society of Mechanical Engineers, United Engineering Center, 345 East 47th Street, New York, New York 10017.

§ 229.53 Brake gauges.

All gauges used by the engineer for braking the train or locomotive shall be located so that they may be conveniently read from the engineer's usual position in the cab. An air gauge may not be more than three pounds per square inch in error.

§ 229.55 Piston travel.

(a) Brake cylinder piston travel shall be sufficient to provide brake shoe clearance when the brakes are released.

(b) When the brakes are applied on a standing locomotive, the brake cylinder piston travel may not exceed 1½ inches less than the total possible piston travel. The total possible piston travel for each locomotive shall be entered on Form FRA F 6180–49A.

(c) The minimum brake cylinder pressure shall be 30 pounds per square inch.

§ 229.57 Foundation brake gear.

A lever, rod, brake beam, hanger, or pin may not be worn through more than 30 percent of its cross-sectional area, cracked, broken, or missing. All pins shall be secured in place with cotters, split keys, or nuts. Brake shoes shall be fastened with a brake shoe key and aligned in relation to the wheel to prevent localized thermal stress in the edge of the rim or the flange.

§ 229.59 Leakage.

(a) Leakage from the main air reservoir and related piping may not exceed an average of 3 pounds per square inch per minute for 3 minutes after the pressure has been reduced to 60 percent of the maximum pressure.

(b) Brake pipe leakage may not exceed 5 pounds per square inch per minute.

(c) With a full service application at maximum brake pipe pressure and with communication to the brake cylinders closed, the brakes shall remain applied at least 5 minutes.

(d) Leakage from control air reservoir, related piping, and pneumatically operated controls may not exceed an average of 3 pounds per square inch per minute for 3 minutes.

DRAFT SYSTEM

§ 229.61 Draft system.

(a) A coupler may not have any of the following conditions:

(1) A distance between the guard arm and the knuckle nose of more than 5⅛ inches on standard type couplers (MCB contour 1904) or more than 5⁵⁄₁₆ inches on D&E couplers.

(2) A crack or break in the side wall or pin bearing bosses outside of the shaded areas shown in Figure 1 or in the pulling face of the knuckle.

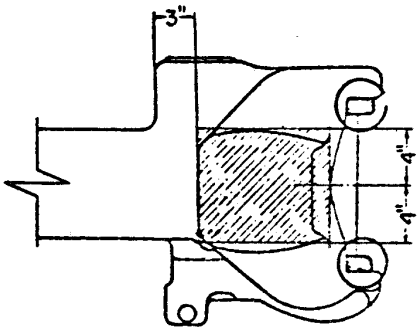

Figure 1

(3) A coupler assembly without anti-creep protection.

(4) Free slack in the coupler or drawbar not absorbed by friction devices or draft gears that exceeds one-half inches.

(5) A broken or cracked coupler carrier.

(6) A broken or cracked yoke.

(7) A broken draft gear.

(b) A device shall be provided under the lower end of all drawbar pins and articulated connection pins to prevent the pin from falling out of place in case of breakage.

SUSPENSION SYSTEM

§ 229.63 Lateral motion.

(a) Except as provided in paragraph (b), the total uncontrolled lateral motion between the hubs of the wheels and boxes, between boxes and pedestals or both, on any pair of wheels may not exceed 1 inch on non-powered axles and friction bearing powered axles, or ¾ inch on all other powered axles.

(b) The total uncontrolled lateral motion may not exceed 1¼ inches on the center axle of three-axle trucks.

§ 229.64 Plain bearings.

A plain bearing box shall contain visible free oil and may not be cracked to the extent that it will leak oil.

§ 229.65 Spring rigging.

(a) Protective construction or safety hangers shall be provided to prevent spring planks, spring seats or bolsters from dropping to track structure in event of a hanger or spring failure.

(b) An elliptical spring may not have its top (long) leaf broken or any other three leaves broken, except when that spring is part of a nest of three or more springs and none of the other springs in the nest has its top leaf or any other three leaves broken. An outer coil spring or saddle may not be broken. An equalizer, hanger, bolt, gib, or pin may not be cracked or broken. A coil spring may not be fully compressed when the locomotive is at rest.

(c) A shock absorber may not be broken or leaking clearly formed droplets of oil or other fluid.

§ 229.67 Trucks.

(a) The male center plate shall extend into the female center plate at least ¾ inch. On trucks constructed to transmit tractive effort through the center plate or center pin, the male center plate shall extend into the female center plate at least 1½ inches. Maximum lost motion in a center plate assemblage may not exceed ½ inch.

(b) Each locomotive shall have a device or securing arrangement to prevent the truck and locomotive body from separating in case of derailment.

(c) A truck may not have a loose tie bar or a cracked or broken center casting, motor suspension lug, equalizer, hanger, gib or pin. A truck frame may not be broken or have a crack in a stress area that may affect its structural integrity.

§229.69 Side bearings.

(a) Friction side bearings with springs designed to carry weight may not have more than 25 percent of the springs in any one nest broken.

(b) Friction side bearings may not be run in contact unless designed to carry weight. Maximum clearance of side bearings may not exceed one-fourth inch on each side or a total of one-half inch on both sides, except where more than two side bearings are used under the same rigid superstructure. The clearance on one pair of side bearings under the same rigid superstructure shall not exceed one-fourth inch on each side or a total of one-half inch on both sides; the other side bearings under the same rigid superstructure may have one-half inch clearance on each side or a total of 1 inch on both sides. These clearances apply where the spread of the side bearings is 50 inches or less; where the spread is greater, the side bearing clearance may only be increased proportionately.

§229.71 Clearance above top of rail.

No part or appliance of a locomotive except the wheels, flexible nonmetallic sand pipe extension tips, and trip cock arms may be less than 2½ inches above the top of rail.

§229.73 Wheel sets.

(a) The variation in the circumference of wheels on the same axle may not exceed ¼ inch (two tape sizes) when applied or turned.

(b) The maximum variation in the diameter between any two wheel sets in a three-powered-axle truck may not exceed ¾ inch, except that when shims are used at the journal box springs to compensate for wheel diameter variation, the maximum variation may not exceed 1¼ inch. The maximum variation in the diameter between any two wheel sets on different trucks on a locomotive that has three-powered-axle trucks may not exceed 1¼ inch. The diameter of a wheel set is the average diameter of the two wheels on an axle.

(c) On standard gauge locomotives, the distance between the inside gauge of the flanges on non-wide flange wheels may not be less than 53 inches or more than 53½ inches. The distance between the inside gauge of the flanges on wide flange wheels may not be less than 53 inches or more than 53¼ inches.

(d) The distance back to back of flanges of wheels mounted on the same axle shall not vary more than ¼ inch.

§229.75 Wheels and tire defects.

Wheels and tires may not have any of the following conditions:

(a) A single flat spot that is 2½ inches or more in length, or two adjoining spots that are each two or more inches in length.

(b) A gouge or chip in the flange that is more than 1½ inches in length and ½ inch in width.

(c) A broken rim, if the tread, measured from the flange at a point five-eighths inch above the tread, is less than 3¾ inches in width.

(d) A shelled-out spot 2½ inches or more in length, or two adjoining spots that are each two or more inches in length.

(e) A seam running lengthwise that is within 3¾ inches of the flange.

(f) A flange worn to a ⅞ inch thickness or less, gauged at a point ⅜ inch above the tread.

(g) A tread worn hollow 5⁄16 inch or more on a locomotive in road service or ⅜ inch or more on a locomotive in switching service.

(h) A flange height of 1½ inches or more measured from tread to the top of the flange.

(i) Tires less than 1½ inches thick.

(j) Rims less than 1 inch thick on a locomotive in road service or less than ¾ inch on a locomotive in yard service.

(k) A crack or break in the flange, tread, rim, plate, or hub.

(l) A loose wheel or tire.

(m) Fusion welding may not be used on tires or steel wheels of locomotives, except for the repair of flat spots and worn flanges on locomotives used exclusively in yard service. A wheel that has been welded is a welded wheel for the life of the wheel.

ELECTRICAL SYSTEM

§229.77 Current collectors.

(a) Pantographs shall be so arranged that they can be operated from the engineer's normal position in the cab. Pantographs that automatically rise when released shall have an automatic

locking device to secure them in the down position.

(b) Each pantograph operating on an overhead trolley wire shall have a device for locking and grounding it in the lowest position, that can be applied and released only from a position where the operator has a clear view of the pantograph and roof without mounting the roof.

§ 229.79 Third rail shoes.

When locomotives are equipped with both third rail and overhead collectors, third-rail shoes shall be deenergized while in yards and at stations when current collection is exclusively from the overhead conductor.

§ 229.81 Emergency pole; shoe insulation.

(a) Each locomotive equipped with a pantograph operating on an overhead trolley wire shall have an emergency pole suitable for operating the pantograph. Unless the entire pole can be safely handled, the part of the pole which can be safely handled shall be marked to so indicate. This pole shall be protected from moisture when not in use.

(b) Each locomotive equipped with third-rail shoes shall have a device for insulating the current collecting apparatus from the third rail.

§ 229.83 Insulation or grounding of metal parts.

All unguarded noncurrent-carrying metal parts subject to becoming charged shall be grounded or thoroughly insulated.

§ 229.85 Doors and cover plates marked "Danger".

All doors and cover plates guarding high voltage equipment shall be marked ''Danger—High Voltage'' or with the word ''Danger'' and the normal voltage carried by the parts so protected.

§ 229.87 Hand-operated switches.

All hand-operated switches carrying currents with a potential of more than 150 volts that may be operated while under load shall be covered and shall be operative from the outside of the cover. Means shall be provided to show whether the switches are open or closed. Switches that should not be operated while under load shall be legibly marked with the words ''must not be operated under load'' and the voltage carried.

§ 229.89 Jumpers; cable connections.

(a) Jumpers and cable connections between locomotives shall be so located and guarded to provide sufficient vertical clearance. They may not hang with one end free.

(b) Cable and jumper connections between locomotive may not have any of the following conditions:

(1) Broken or badly chafed insulation.

(2) Broken plugs, receptacles or terminals.

(3) Broken or protruding strands of wire.

§ 229.91 Motors and generators.

A motor or a generator may not have any of the following conditions:

(a) Be shorted or grounded.

(b) Throw solder excessively.

(c) Show evidence of coming apart.

(d) Have an overheated support bearing.

(e) Have an excessive accumulation of oil.

INTERNAL COMBUSTION EQUIPMENT

§ 229.93 Safety cut-off device.

The fuel line shall have a safety cut-off device that—

(a) Is located adjacent to the fuel supply tank or in another safe location;

(b) Closes automatically when tripped and can be reset without hazard; and

(c) Can be hand operated from clearly marked locations, one inside the cab and one on each exterior side of the locomotive.

§ 229.95 Venting.

Fuel tank vent pipes may not discharge on the roof nor on or between the rails.

§ 229.97 Grounding fuel tanks.

Fuel tanks and related piping shall be electrically grounded.

§ 229.99 Safety hangers.

Drive shafts shall have safety hangers.

§ 229.101 Engines.

(a) The temperature and pressure alarms, controls and related switches of internal combustion engines shall function properly.

(b) Whenever an engine has been shut down due to mechanical or other problems, a distinctive warning notice giving reason for the shut-down shall be conspicuously attached near the engine starting control until repairs have been made.

(c) Wheel slip/slide protection shall be provided on a locomotive with an engine displaying a warning notice whenever required by § 229.115(b).

STEAM GENERATORS

§ 229.103 Safe working pressure; factor of safety.

The safe working pressure for each steam generator shall be fixed by the chief mechanical officer of the carrier. The minimum factor of safety shall be four. The fixed safe working pressure shall be indicated on FRA Form F 6180–49A.

§ 229.105 Steam generator number.

An identification number shall be marked on the steam generator's separator and that number entered on FRA Form F 6180–49A.

§ 229.107 Pressure gauge.

(a) Each steam generator shall have an illuminated steam gauge that correctly indicates the pressure. The steam pressure gauge shall be graduated to not less than one and one-half times the allowed working pressure of the steam generator.

(b) Each steam pressure gauge on a steam generator shall have a siphon that prevents steam from entering the gauge. The pipe connection shall directly enter the separator and shall be steam tight between the separator and the gauge.

§ 229.109 Safety valves.

Every steam generator shall be equipped with at least two safety valves that have a combined capacity to prevent an accumulation of pressure of more than five pounds per square inch above the allowed working pressure. The safety valves shall be independently connected to the separator and located as closely to the separator as possible without discharging inside of the generator compartment. The ends of the safety valve discharge lines shall be located or protected so that discharged steam does not create a hazard.

§ 229.111 Water-flow indicator.

(a) Steam generators shall be equipped with an illuminated visual return water-flow indicator.

(b) Steam generators shall be equipped with an operable test valve or other means of determining whether the steam generator is filled with water. The fill test valve may not discharge steam or hot water into the steam generator compartment.

§ 229.113 Warning notice.

Whenever any steam generator has been shut down because of defects, a distinctive warning notice giving reasons for the shut-down shall be conspicuously attached near the steam generator starting controls until the necessary repairs have been made. The locomotive in which the steam generator displaying a warning notice is located may continue in service until the next periodic inspection.

CABS AND CAB EQUIPMENT

§ 229.115 Slip/slide alarms.

(a) Except for MU locomotives, each locomotive used in road service shall be equipped with a device that provides an audible or visual alarm in the cab of either slipping or sliding wheels on powered axles under power. When two or more locomotives are coupled in multiple or remote control, the wheel slip/slide alarm of each locomotive shall be shown in the cab of the controlling locomotive.

(b) Except as provided in § 229.9, an equipped locomotive may not be dispatched in road service, or continue in road service following a daily inspection, unless the wheel slip/slide protective device of whatever type—

(1) Is functioning for each powered axle under power; and

(2) Would function on each powered axle if it were under power.

(c) Effective January 1, 1981, all new locomotives capable of being used in road service shall be equipped with a device that detects wheel slip/slide for each powered axle when it is under power. The device shall produce an audible or visual alarm in the cab.

§ 229.117 Speed indicators.

(a) After December 31, 1980, each locomotive used as a controlling locomotive at speeds in excess of 20 miles per hour shall be equipped with a speed indicator which is—

(1) Accurate within ±3 miles per hour of actual speed at speeds of 10 to 30 miles per hour and accurate within ±5 miles per hour at speeds above 30 miles per hour; and

(2) Clearly readable from the engineer's normal position under all light conditions.

(b) Each speed indicator required shall be tested as soon as possible after departure by means of speed test sections or equivalent procedures.

§ 229.119 Cabs, floors, and passageways.

(a) Cab seats shall be securely mounted and braced. Cab doors shall be equipped with a secure and operable latching device.

(b) Cab windows of the lead locomotive shall provide an undistorted view of the right-of-way for the crew from their normal position in the cab. (See also, Safety Glazing Standards, 49 CFR part 223, 44 FR 77348, Dec. 31, 1979.)

(c) Floors of cabs, passageways, and compartments shall be kept free from oil, water, waste or any obstruction that creates a slipping, tripping or fire hazard. Floors shall be properly treated to provide secure footing.

(d) The cab shall be provided with proper ventilation and with a heating arrangement that maintains a temperature of at least 50 degrees Fahrenheit 6 inches above the center of each seat in the cab.

(e) Similar locomotives with open end platforms coupled in multiple control and used in road service shall have a means of safe passage between them; no passageway is required through the nose of car body locomotives. There shall be a continuous barrier across the full width of the end of a locomotive or a continuous barrier between locomotives.

(f) Containers shall be provided for carrying fusees and torpedoes. A single container may be used if it has a partition to separate fusees from torpedoes. Torpedoes shall be kept in a closed metal container.

§ 229.121 Locomotive cab noise.

(a) After August 31, 1980, the permissible exposure to a continuous noise in a locomotive cab shall not exceed an eight-hour time-weighted average of 90dB(A), with a doubling rate of 5dB(A) as indicated in the table. Continuous noise is any sound with a rise time of more than 35 milliseconds to peak intensity and a duration of more than 500 milliseconds to the time when the level is 20dB below the peak.

Duration permitted (hours)	Sound level (dB(A))
12	87
8	90
6	92
4	95
2	100
1½	102
1	105
½	110
¼ or less	115

(b) When the continuous noise exposure is composed of two or more periods of noise exposure of different levels, their combined effect shall be considered. Exposure to different levels for various periods of time shall be computed according to the following formula:

$$D=T_1/L_{1+}\ T_2/L_2+\ldots\ T_n/L_n$$

Where:

D = noise dose.

T = the duration of exposure (in hours) at a given continuous noise level.

L = the limit (in hours) for the level present during the time T (from the table).

If the value of D exceeds 1, the exposure exceeds permissible levels.

(c) Exposure to continuous noise shall not exceed 115dB(A).

(d) Noise measurements shall be made under typical operating conditions using a sound level meter conforming, at a minimum, to the requirements of ANSI S1.4–1971, Type 2, and set to an A-weighted slow response or with an audiodosimeter of equivalent accuracy and precision.

(e) In conducting sound level measurements with a sound level meter, the microphone shall be oriented vertically and positioned approximately 15 centimeters from and on axis with the crew member's ear. Measurements with an audiodosimeter shall be conducted in accordance with manufacturer's procedures as to microphone placement and orientation.

§ 229.123 Pilots, snowplows, end plates.

After January 1, 1981, each lead locomotive shall be equipped with an end plate that extends across both rails, a pilot, or a snowplow. The minimum clearance above the rail of the pilot, snowplow or end plate shall be 3 inches, and the maximum clearance 6 inches.

§ 229.125 Headlights and auxiliary lights.

(a) Each lead locomotive used in road service shall have a headlight that produces at least 200,000 candela. If a locomotive or locomotive consist in road service is regularly required to run backward for any portion of its trip other than to pick up a detached portion of its train or to make terminal movements, it shall also have on its rear a headlight that produces at least 200,000 candela. Each headlight shall be arranged to illuminate a person at least 800 feet ahead and in front of the headlight.

(b) Each locomotive or locomotive consist used in yard service shall have two headlights, one located on the front of the locomotive or locomotive consist and one on its rear. Each headlight shall produce at least 60,000 candela and shall be arranged to illuminate a person at least 300 feet ahead and in front of the headlight.

(c) Headlights shall be provided with a device to dim the light.

(d) Effective December 31, 1997, each lead locomotive operated at a speed greater than 20 miles per hour over one or more public highway-rail crossings shall be equipped with operative auxiliary lights, in addition to the headlight required by paragraph (a) or (b) of this section. A locomotive equipped on March 6, 1996 with auxiliary lights in conformance with § 229.133 shall be deemed to conform to this section until March 6, 2000. All locomotives in compliance with § 229.133(c) shall be deemed to conform to this section. Auxiliary lights shall be composed as follows:

(1) Two white auxiliary lights shall be placed at the front of the locomotive to form a triangle with the headlight.

(i) The auxiliary lights shall be at least 36 inches above the top of the rail, except on MU locomotives and control cab locomotives where such placement would compromise the integrity of the car body or be otherwise impractical. Auxiliary lights on such MU locomotives and control cab locomotives shall be at least 24 inches above the top of the rail.

(ii) The auxiliary lights shall be spaced at least 36 inches apart if the vertical distance from the headlight to the horizontal axis of the auxiliary lights is 60 inches or more.

(iii) The auxiliary lights shall be spaced at least 60 inches apart if the vertical distance from the headlight to the horizontal axis of the auxiliary lights is less than 60 inches.

(2) Each auxiliary light shall produce at least 200,000 candela.

(3) The auxiliary lights shall be focused horizontally within 15 degrees of the longitudinal centerline of the locomotive.

(e) Auxiliary lights required by paragraph (d) of this section may be arranged

(1) to burn steadily or

(2) flash on approach to a crossing.

If the auxiliary lights are arranged to flash;

(i) they shall flash alternately at a rate of at least 40 flashes per minute and at most 180 flashes per minute,

(ii) the railroad's operating rules shall set a standard procedure for use of flashing lights at public highway-rail grade crossings, and

(iii) the flashing feature may be activated automatically, but shall be capable of manual activation and deactivation by the locomotive engineer.

(f) Auxiliary lights required by paragraph (d) of this section shall be continuously illuminated immediately prior to and during movement of the locomotive, except as provided by railroad operating rules, timetable or special instructions, unless such exception is disapproved by FRA. A railroad may except use of auxiliary lights at a specific public highway-rail grade crossing by designating that exception in the railroad's operating rules, timetable, or a special order. Any exception from use of auxiliary lights at a specific public grade crossing can be disapproved for a stated cause by FRA's Associate Administrator for Safety or any one of FRA's Regional Administrators, after investigation by FRA and opportunity for response from the railroad.

(g) Movement of locomotives with defective auxiliary lights.

(1) A lead locomotive with only one failed auxiliary light must be repaired or switched to a trailing position before departure from the place where an initial terminal inspection is required for that train.

(2) A locomotive with only one auxiliary light that has failed after departure from an initial terminal, must be repaired not later than the next calendar inspection required by § 229.21.

(3) A lead locomotive with two failed auxiliary lights may only proceed to the next place where repairs can be made. This movement must be consistent with § 229.9.

(h) Any locomotive subject to Part 229, that was built before December 31, 1948, and that is not used regularly in commuter or intercity passenger service, shall be considered historic equipment and excepted from the requirements of paragraphs (d) through (h) of this section.

[45 FR 21109, Mar. 31, 1980, as amended at 61 FR 8887, Mar. 6, 1996]

§ 229.127 Cab lights.

(a) Each locomotive shall have cab lights which will provide sufficient illumination for the control instruments, meters, and gauges to enable the engine crew to make accurate readings from their normal positions in the cab. These lights shall be located, constructed, and maintained so that light shines only on those parts requiring illumination and does not interfere with the crew's vision of the track and signals. Each controlling locomotive shall also have a conveniently located light that can be readily turned on and off by the persons operating the locomotive and that provides sufficient illumination for them to read train orders and timetables.

(b) Cab passageways and compartments shall have adequate illumination.

§ 229.129 Audible warning device.

(a) After August 31, 1980, each lead locomotive shall be provided with an audible warning device that produces a minimum sound level of 96db(A) at 100 feet forward of the locomotive in its direction of travel. The device shall be arranged so that it can be conveniently operated from the engineer's normal position in the cab.

(b) Measurement of the sound level shall be made using a sound level meter conforming, at a minimum, to the requirements of ANSI S1.4–1971, Type 2, and set to an A-weighted slow response. While the locomotive is on level tangent track, the microphone shall be positioned 4 feet above the ground at the center line of the track, and shall be oriented with respect to the sound source in accordance with the manufacturer's recommendations.

(c) A 4dB(A) measurement tolerance is allowable for a given measurement.

§ 229.131 Sanders.

Except for MU locomotives, each locomotive shall be equipped with operable sanders that deposit sand on each rail in front of the first power operated wheel set in the direction of movement.

§ 229.133 Interim locomotive conspicuity measures—auxiliary external lights.

(a) A locomotive at the head of a train or other movement is authorized to be equipped with auxiliary external lights, additional to the headlight required by § 229.125, for the purpose of improved conspicuity. A locomotive that is equipped with auxiliary external lights in conformance with the specifications or performance standards set forth in paragraph (b) of this

section on the date of issuance of a final rule that requires additional or other external lights on locomotives for improved conspicuity, as required by section 202(u) of the Federal Railroad Safety Act of 1970, shall be deemed to conform to the requirements of the final rule for four years following the date of issuance of that final rule.

(b) Each qualifying arrangement of auxiliary external lights shall conform to one of the following descriptions:

(1) *Ditch lights.* (i) Ditch lights shall consist of two white lights, each producing a steady beam of at least 200,000 candela, placed at the front of the locomotive, at least 36 inches above the top of the rail.

(ii) Ditch lights shall be spaced at least 36 inches apart if the vertical distance from the headlight to the horizontal axis of the ditch lights is 60 inches or more.

(iii) Ditch lights shall be spaced at least 60 inches apart if the vertical distance from the headlight to the horizontal axis of the ditch lights is less than 60 inches.

(iv) Ditch lights shall be focused horizontally within 45 degrees of the longitudinal centerline of the locomotive.

(2) *Strobe lights.* (i) Strobe lights shall consist of two white stroboscopic lights, each with ''effective intensity,'' as defined by the Illuminating Engineering Society's Guide for Calculating the Effective Intensity of Flashing Signal Lights (November 1964), of at least 500 candela.

(ii) The flash rate of strobe lights shall be at least 40 flashes per minute and at most 180 flashes per minute.

(iii) Strobe lights shall be placed at the front of the locomotive, at least 48 inches apart, and at least 36 inches above the top of the rail.

(3) *Crossing lights.* (i) Crossing lights shall consist of two white lights, placed at the front of the locomotive, at least 36 inches above the top of the rail.

(ii) Crossing lights shall be spaced at least 36 inches apart if the vertical distance from the headlight to the horizontal axis of the ditch lights is 60 inches or more.

(iii) Crossing lights shall be spaced at least 60 inches apart if the vertical distance from the headlight to the horizontal axis of the ditch lights is less than 60 inches.

(iv) Each crossing light shall produce at least 200,000 candela, either steadily burning or alternately flashing.

(v) The flash rate of crossing lights shall be at least 40 flashes per minute and at most 180 flashes per minute.

(vi) Crossing lights shall be focused horizontally within 15 degrees of the longitudinal centerline of the locomotive.

(4) *Oscillating light.* (i) An oscillating light shall consist of:

(A) One steadily burning white light producing at least 200,000 candela in a moving beam that depicts a circle or a horizontal figure ''8'' to the front, about the longitudinal centerline of the locomotive; or

(B) Two or more white lights producing at least 200,000 candela each, at one location on the front of the locomotive, that flash alternately with beams within five degrees horizontally to either side of the longitudinal centerline of the locomotive.

(ii) An oscillating light may incorporate a device that automatically extinguishes the white light if display of a light of another color is required to protect the safety of railroad operations.

(c)(1) Any lead locomotive equipped with oscillating lights as described in paragraph (b)(4) that were ordered for installation on that locomotive prior to January 1, 1996, is considered in compliance with § 229.125(d) (1) through (3).

(2) Any lead locomotive equipped with strobe lights as described in paragraph (b)(2) and operated at speeds no greater than 40 miles per hour, is considered in compliance with § 229.125(d) (1) through (3) until the locomotive is retired or rebuilt, whichever comes first.

(3) Any lead locomotive equipped with two white auxiliary lights spaced at least 44 inches apart on at least one axis which was equipped with these auxiliary lights before May 30, 1994, will be considered in compliance with

§ 229.125(d) (1) through (3) until the locomotive is retired or rebuilt, whichever comes first.

[58 FR 6902, Feb. 3, 1993, as amended at 59 FR 24963, May 13, 1994; 59 FR 39705, Aug. 4, 1994; 61 FR 8887, Mar. 6, 1996]

§ 229.135 Event recorders.

(a) *Duty to equip.* Effective May 5, 1995, and except as provided in paragraph (b) of this section, any train operated faster than 30 miles per hour shall have an in-service event recorder in the lead locomotive. The presence of the event recorder shall be noted on Form FRA F6180–49A, under the REMARKS section, except that an event recorder designed to allow the locomotive to assume the lead position only if the recorder is properly functioning is not required to have its presence noted on Form FRA F6180–49A. For the purpose of this section, ''train'' includes a locomotive or group of locomotives with or without cars, and ''lead locomotive'' means the locomotive from whose cab the crew is operating the train and, when cab control locomotives and/or MU locomotives are coupled together, is the first locomotive proceeding in the direction of movement. The duty to equip the lead locomotive may be met with an event recorder located elsewhere than the lead locomotive provided that such event recorder monitors and records the required data as though it were located in the lead locomotive.

(b) *Response to defective equipment.* A locomotive on which the event recorder has been taken out of service as provided in paragraph (c) of this section may remain as the lead locomotive only until the next calendar-day inspection. A locomotive with an inoperative event recorder is not deemed to be in improper condition, unsafe to operate, or a non-complying locomotive under §§ 229.7 and 229.9, and notwithstanding any other requirements in this chapter, inspection, maintenance, and testing of event recorders is limited to the requirements set forth in § 229.25(e).

(c) *Removal from service.* A railroad may remove an event recorder from service and, if a railroad knows that an event recorder is not monitoring or recording the data specified in § 229.5(g), shall remove the event recorder from service. When a railroad removes an event recorder from service, a qualified person shall cause to be recorded the date the device was removed from service on Form FRA F6180–49A, under the REMARKS section. An event recorder designed to allow the locomotive to assume the lead position only if the recorder is properly functioning is not required to have its removal from service noted on Form FRA F6180–49A.

(d) *Preserving accident data.* For the purposes of this section, the term ''event recorder'' includes all locomotive-mounted recording devices designed to record information concerning the functioning of a locomotive or train regardless of whether the device meets the definition of ''event recorder'' in § 229.5.

(1) *Accidents required to be reported to the Federal Railroad Administration.* If any locomotive equipped with an event recorder is involved in an accident that is required to be reported to FRA, the railroad using the locomotive shall, to the extent possible, and to the extent consistent with the safety of life and property, preserve the data recorded by the device for analysis by FRA. This preservation requirement permits the railroad to extract and analyze such data; *provided* the original or a first-order accurate copy of the data shall be retained in secure custody and shall not be utilized for analysis or any other purpose except by direction of FRA or the National Transportation Safety Board. This preservation requirement shall expire 30 days after the date of the accident unless FRA or the Board notifies the railroad in writing that the data are desired for analysis.

(2) *Relationship to other laws.* Nothing in this section is intended to alter the legal authority of law enforcement officials investigating potential violation(s) of State criminal law(s) and nothing in this chapter is intended to alter in any way the priority of National Transportation Safety Board investigations under 49 U.S.C. 1131 and 1134, nor the authority of the Secretary of Transportation to investigate railroad accidents under 49 U.S.C. 5121, 5122, 20107, 20111, 20112, 20505, 20702, 20703, and 20902.

(e) *Disabling event recorders.* Except as provided in paragraph (c) of this section, any individual who willfully disables an event recorder is subject to civil penalty and to disqualification from performing safety-sensitive functions on a railroad as provided in § 218.55 of this chapter and any individual who tampers with or alters the data recorded by such a device is subject to a civil penalty as provided in appendix B of this part and to disqualification from performing safety-sensitive functions on a railroad if found unfit for such duties under the procedures in 49 CFR part 209.

[58 FR 36614, July 8, 1993, as amended at 60 FR 27905, May 26, 1995]

Subpart D—Design Requirements

§ 229.141 Body structure, MU locomotives.

(a) MU locomotives built new after April 1, 1956 that are operated in trains having a total empty weight of 600,000 pounds or more shall have a body structure designed to meet or exceed the following minimum specifications:

(1) The body structure shall resist a minimum static end load of 800,000 pounds at the rear draft stops ahead of the bolster on the center line of draft, without developing any permanent deformation in any member of the body structure.

(2) An anti-climbing arrangement shall be applied at each end that is designed so that coupled MU locomotives under full compression shall mate in a manner that will resist one locomotive from climbing the other. This arrangement shall resist a vertical load of 100,000 pounds without exceeding the yield point of its various parts or its attachments to the body structure.

(3) The coupler carrier and its connections to the body structure shall be designed to resist a vertical downward thrust from the coupler shank of 100,000 pounds for any horizontal position of the coupler, without exceeding the yield points of the materials used. When yielding type of coupler carrier is used, an auxiliary arrangement shall be provided that complies with these requirements.

(4) The outside end of each locomotive shall be provided with two main vertical members, one at each side of the diaphragm opening; each main member shall have an ultimate shear value of not less than 300,000 pounds at a point even with the top of the underframe member to which it is attached. The attachment of these members at bottom shall be sufficient to develop their full shear value. If reinforcement is used to provide the shear value, the reinforcement shall have full value for a distance of 18 inches up from the underframe connection and then taper to a point approximately 30 inches above the underframe connection.

(5) The strength of the means of locking the truck to the body shall be at least the equivalent of an ultimate shear value of 250,000 pounds.

(b) MU locomotives built new after April 1, 1956 that are operated in trains having a total empty weight of less than 600,000 pounds shall have a body structure designed to meet or exceed the following minimum specifications:

(1) The body structure shall resist a minimum static end load of 400,000 pounds at the rear draft stops ahead of the bolster on the center line of draft, without developing any permanent deformation in any member of the body structure.

(2) An anti-climbing arrangement shall be applied at each end that is designed so that coupled locomotives under full compression shall mate in a manner that will resist one locomotive from climbing the other. This arrangement shall resist a vertical load of 75,000 pounds without exceeding the yield point of its various parts or its attachments to the body structure.

(3) The coupler carrier and its connections to the body structure shall be designed to resist a vertical downward thrust from the coupled shank of 75,000 pounds for any horizontal position of the coupler, without exceeding the yield points of the materials used. When a yielding type of coupler carrier is used, an auxiliary arrangement shall be provided that complies with these requirements.

(4) The outside end of each MU locomotive shall be provided with two main vertical members, one at each side of the diaphragm opening; each main member shall have an ultimate shear

value of not less than 200,000 pounds at a point even with the top of the underframe member to which it is attached. The attachment of these members at bottom shall be sufficient to develop their full shear value, the reinforcement shall have full value for a distance of 18 inches up from the underframe connection and then taper to a point approximately 30 inches above the underframe connection.

(5) The strength of the means of locking the truck to the body shall be at least the equivalent of an ultimate shear value of 250,000 pounds.

APPENDIX A TO PART 229—FORM FRA 6180–49A

EDITORIAL NOTE: Appendix A, published at 45 FR 21118, Mar. 31, 1980, as part of the original document, is not carried in the CFR. Copies of Form FRA F6180–49A are available by contacting the Federal Railroad Administration, Office of Standards and Procedures, 400 7th St., SW., Washington, DC 20590.

APPENDIX B TO PART 229—SCHEDULE OF CIVIL PENALTIES[1]

Section	Violation	Willful violation
Subpart A—General		
229.7 Prohibited acts: Safety deficiencies not governed by specific regulations: To be assessed on relevant facts	$1,000–5,000	$2,000–7,500
229.9 Movement of non-complying locomotives	(1)	(1)
229.11 Locomotive identification	1,000	2,000
229.13 Control of locomotives	2,500	5,000
229.17 Accident reports	2,500	5,000
229.19 Prior Waivers	(1)	(1)
Subpart B—Inspection and tests		
229.21 Daily inspection:		
(a)(b):		
(1) Inspection overdue	2,000	4,000
(2) Inspection report not made, improperly executed, or not retained	1,000	2,000
(c) Inspection not performed by a qualified person	1,000	2,000
229.23 Periodic inspection General		
(a)(b):		
(1) Inspection overdue	2,500	5,000

APPENDIX B TO PART 229—SCHEDULE OF CIVIL PENALTIES[1]—Continued

Section	Violation	Willful violation
(2) Inspection performed improperly or at a location where the underneath portion cannot be safely inspected	2,500	5,000
(c)(d):		
(1) Form missing	1,000	2,000
(2) Form not properly displayed	1,000	2,000
(3) Form improperly executed	1,000	2,000
(e) Replace Form FRA F 6180–49A by April 2	1,000	2,000
(f) Secondary record of the information reported on Form FRA F 6180.49A	1,000	2,000
229.25		
(a) through (e)(4) Tests: Every periodic inspection	2,500	5,000
(e)(5) Ineffective maintenance	8,000	16,000
229.27 Annual tests	2,500	5,000
229.29 Biennial tests	2,500	5,000
229.31:		
(a) Biennial hydrostatic tests of main reservoirs	2,500	5,000
(b) Biennial hammer tests of main reservoirs	2,500	5,000
(c) Drilled telltale holes in welded main reservoirs	2,500	5,000
(d) Biennial tests of aluminum main reservoirs	2,500	5,000
229.33 Out-of-use credit	1,000	2,000
Subpart C—Safety Requirements		
229.41 Protection against personal injury	2,500	5,000
229.43 Exhaust and battery gases	2,500	5,000
229.45 General condition: To be assessed based on relevant facts	1,000–5,000	2,000–7,500
229.46 Brakes: General	2,500	5,000
229.47 Emergency brake valve	2,500	5,000
229.49 Main reservoir system:		
(a)(1) Main reservoir safety valve	2,500	5,000
(2) Pneumatically actuated control reservoir	2,500	5,000
(b)(c) Main reservoir governors	2,500	5,000
229.51 Aluminum main reservoirs	2,500	5,000
229.53 Brake gauges	2,500	5,000
229.55 Piston travel	2,500	5,000
229.57 Foundation brake gear	2,500	5,000
229.59 Leakage	2,500	5,000
229.61 Draft system	2,500	5,000
229.63 Lateral motion	2,500	5,000
229.64 Plain bearing	2,500	5,000
229.65 Spring rigging	2,500	5,000
229.67 Trucks	2,500	5,000
229.69 Side bearings	2,500	5,000
229.71 Clearance above top of rail	2,500	5,000
229.73 Wheel sets	2,500	5,000

APPENDIX B TO PART 229—SCHEDULE OF CIVIL PENALTIES[1]—Continued

Section	Violation	Willful violation
229.75 Wheel and tire defects:		
(a),(d) Slid flat or shelled spot(s):		
(1) One spot 2½″ or more but less than 3″ in length	2,500	5,000
(2) One spot 3″ or more in length	5,000	7,500
(3) Two adjoining spots each of which is 2″ or more in length but less than 2½″ in length	2,500	5,000
(4) Two adjoining spots each of which are at least 2″ in length, if either spot is 2½″ or more in length	5,000	7,500
(b) Gouge or chip in flange of:		
(1) more than 1½″ but less than 1⅝″ in length; and more than ½″ but less than ⅝″ in width	2,500	5,000
(2) 1⅝″ or more in length and ⅝″ or more in width	5,000	7,500
(c) Broken rim	5,000	7,500
(e) Seam in tread	2,500	5,000
(f) Flange thickness of:		
(1) ⅞″ or less but more than 13⁄16″	2,500	5,000
(2) 13⁄16″ or less	5,000	7,500
(g) Tread worn hollow	2,500	5,000
(h) Flange height of:		
(1) 1½″ or greater but less than 1⅝″	2,500	5,000
(2) 1⅝″ or more	5,000	7,000
(i) Tire thickness	2,500	5,000
(j) Rim thickness:		
(1) Less than 1″ in road service and ¾″ in yard service	2,500	5,000
(2) 15⁄16″ or less in road service and 11⁄16″ in yard service	5,000	7,500
(k) Crack of less than 1″	5,000	7,500
(1) Crack of less than 1″	2,500	5,000
(2) Crack of 1″ or more	5,000	7,500
(3) Break	5,000	7,500
(l) Loose wheel or tire	5,000	7,500
(m) Welded wheel or tire	5,000	7,500
229.77 Current collectors	2,500	5,000
229.79 Third rail shoes and beams	2,000	4,000
229.81 Emergency pole; shoe insulation	2,500	5,000
229.83 Insulation or grounding	5,000	7,500
229.85 Door and cover plates marked ''Danger''	2,500	5,000
229.87 Hand operated switches	2,500	5,000
229.89 Jumpers; cable connections:		
(a) Jumpers and cable connections; located and guarded	2,500	5,000

APPENDIX B TO PART 229—SCHEDULE OF CIVIL PENALTIES[1]—Continued

Section	Violation	Willful violation
(b) Condition of jumpers and cable connections	2,500	5,000
229.91 Motors and generators	2,500	5,000
229.93 Safety cut-off device	2,500	5,000
229.95 Venting	2,500	5,000
229.97 Grounding fuel tanks	2,500	5,000
229.99 Safety hangers	2,500	5,000
229.101 Engines:		
(a) Temperature and pressure alarms, controls, and switches	2,500	5,000
(b) Warning notice	2,500	5,000
(c) Wheel slip/slide protection	2,500	5,000
229.103 Safe working pressure; factor of safety	2,500	5,000
229.105 Steam generator number	500	1,000
229.107 Pressure gauge	2,500	5,000
229.109 Safety valves	2,500	5,000
229.111 Water-flow indicator	2,500	5,000
229.113 Warning notice	2,500	5,000
229.115 Slip/slide alarms	2,500	5,000
229.117 Speed indicators	2,500	5,000
229.119 Cabs, floors, and passageways:		
(a)(1) Cab set not securely mounted or braced	2,500	5,000
(2) Insecure or improper latching device	2,500	5,000
(b) Cab windows of lead locomotive	2,500	5,000
(c) Floors, passageways, and compartments	2,500	5,000
(d) Ventilation and heating arrangement	2,500	5,000
(e) Continuous barrier	2,500	5,000
(f) Containers for fuses and torpedoes	2,500	5,000
229.121 Locomotive cab noise	2,500	5,000
229.123 Pilots, snowplows, end plates	2,500	5,000
229.125		
(a) Headlights	2,500	5,000
(d) Auxiliary lights	2,500	5,000
229.127 Cab lights	2,500	5,000
229.129 Audible warning device	2,500	5,000
229.131 Sanders	1,000	2,000
229.135		
(a) Lead locomotive without in-service event recorder	2,500	5,000
(b) Improper response to out of service event recorder	2,500	5,000
(c) Unauthorized removal from service	2,500	5,000
Failure to remove from service a recorder known to have failed	2,500	5,000
(d) Failure to preserve data or unauthorized extraction of data	2,500	5,000
(e) Tampering with device or data	2,500	7,500

APPENDIX B TO PART 229—SCHEDULE OF CIVIL PENALTIES[1]—Continued

Section	Violation	Willful violation
Subpart D—Design Requirements		
229.141 Body structure, MU locomotives	2,500	5,000

[1] A penalty may be assessed against an individual only for a willful violation. Generally, when two or more violations of these regulations are discovered with respect to a single locomotive that is used by a railroad, the appropriate penalties set forth above are aggregated up to a maximum of $10,000 per day. However, a failure to perform, with respect to a particular locomotive, any of the inspections and tests required under subpart B of this part will be treated as a violation separate and distinct from, and in addition to, any substantive violative conditions found on that locomotive. Moreover, the Administrator reserves the right to assess a penalty of up to $20,000 for any violation where circumstances warrant. See 49 CFR part 209, appendix A.

Failure to observe any condition for movement set forth in § 229.9 will deprive the railroad of the benefit of the movement-for-repair provision and make the railroad and any responsible individuals liable for penalty under the particular regulatory section(s) concerning the substantive defect(s) present on the locomotive at the time of movement. Failure to comply with § 229.19 will result in the lapse of any affected waiver.

[53 FR 52931, Dec. 29, 1988, as amended at 58 FR 36615, July 8, 1993; 61 FR 8888, Mar. 6, 1996]

APPENDIX C TO PART 229—FRA LOCOMOTIVE STANDARDS—CODE OF DEFECTS

EDITORIAL NOTE: Appendix C, published at 45 FR 21121, Mar. 31, 1980, as part of the original document, is not carried in the CFR.

PART 230—LOCOMOTIVE INSPECTION

AUTHORITY: 45 U.S.C. 22–34, as amended; 45 U.S.C. 431, 438, as amended; 49 app. U.S.C. 1655(e), as amended; Pub. L. 100–342; and 49 CFR 1.49(c), (g), and (m).

§ 230.0 Steam powered locomotives.

(a) Any person (including a railroad subject to this part and any manager, supervisor, official, or other employee or agent of such a railroad) who violates any requirement of 49 CFR part 230, subpart A (§§ 230.1 to 230.55) or subpart B (§§ 230.101 to 230.162) as in effect on October 1, 1978, or of the Locomotive Inspection Act, or causes the violation of any such requirement is subject to a civil penalty of at least $250 and not more than $10,000 per violation, except that: Penalties may be assessed against individuals only for willful violations, and, where a grossly negligent violation or a pattern of repeated violations has created an imminent hazard of death or injury to persons, or has caused death or injury, a penalty not to exceed $20,000 per violation may be assessed. Each day a violation continues shall constitute a separate offense.

(b) Any interested person may consult the October 1, 1978 revision of 49 CFR parts 200–999 or obtain a copy of these regulations by contacting the Federal Railroad Administration, Office of Standards and Procedures, 400 7th St., SW., Washington, DC 20590.

[45 FR 21109, Mar. 31, 1980, as amended at 53 FR 28602, July 28, 1988]

PART 231—RAILROAD SAFETY APPLIANCE STANDARDS

Sec.

231.0 Applicability and penalties.
231.1 Box and other house cars built or placed in service before October 1, 1966.
231.2 Hopper cars and high-side gondolas with fixed ends.
231.3 Drop-end high-side gondola cars.
231.4 Fixed-end low-side gondola and low-side hopper cars.
231.5 Drop-end low-side gondola cars.
231.6 Flat cars.
231.7 Tank cars with side platforms.
231.8 Tank cars without side sills and tank cars with short side sills and end platforms.
231.9 Tank cars without end sills.
231.10 Caboose cars with platforms.
231.11 Caboose cars without platforms.
231.12 Passenger-train cars with wide vestibules.
231.13 Passenger-train cars with open-end platforms.
231.14 Passenger-train cars without end platforms.
231.15 Steam locomotives used in road service.
231.16 Steam locomotives used in switching service.
231.17 Specifications common to all steam locomotives.
231.18 Cars of special construction.
231.19 Definition of ''Right'' and ''Left.''
231.20 Variation in size permitted.
231.21 Tank cars without underframes.
231.22 Operation of track motor cars.
231.23 Unidirectional passenger-train cars adaptable to van-type semi-trailer use.
231.24 Box and other house cars with roofs, 16 feet 10 inches or more above top of rail.
231.25 Track motorcars (self-propelled 4-wheel cars which can be removed from the rails by men).

231.26 Pushcars.
231.27 Box and other house cars without roof hatches or placed in service after October 1, 1966.
231.28 Box and other house cars with roof hatches built or placed in service after October 1, 1966.
231.29 Road locomotives with corner stairways.
231.30 Locomotives used in switching service.
APPENDIX A TO PART 231—SCHEDULE OF CIVIL PENALTIES

AUTHORITY: 45 U.S.C. 2, 4, 6, 8, 10, and 11–14, 16, as amended; 45 U.S.C. 431, 438, as amended; 49 app. U.S.C. 1655(e), as amended; Pub. L. 100–342; and 49 CFR 1.49(c), (g), and (m).

SOURCE: 33 FR 19663, Dec. 25, 1968, unless otherwise noted.

NOTE: Where rivets or bolts are required in this part 231 a two-piece steel rivet may be used consisting of:

(a) A solid shank of one-half (½) inch minimum diameter steel or material of equal or greater strength having cold forged head on one end, a shank length for material thickness fastened, locking grooves, breakneck groove and pull grooves (all annular grooves) on the opposite end.

(b) A collar of similar material which is cold swaged into the locking grooves forming a head for the opposite end of item (a) after the pull groove section has been removed.

§231.0 Applicability and penalties.

(a) Except as provided in paragraph (b), this part applies to all standard gage railroads.

(b) This part does not apply to:

(1) A railroad that operates only on track inside an installation which is not part of the general railroad system of transportation; or

(2) Rapid transit operations in an urban area that are not connected with the general railroad system of transportation.

(c) As used in this part, *carrier* means ''railroad,'' as that term is defined below.

(d) *Railroad* means all forms of nonhighway ground transportation that run on rails or electromagnetic guideways, including (1) commuter or other short-haul rail passenger service in a metropolitan or suburban area, and (2) high speed ground transportation systems that connect metropolitan areas, without regard to whether they use new technologies not associated with traditional railroads. Such term does not include rapid transit operations within an urban area that are not connected to the general railroad system of transportation.

(e) Any person (including a railroad and any manager, supervisor, official, or other employee or agent of a railroad) who violates any requirement of this part or causes the violation of any such requirement is subject to a civil penalty of at least $250 and not more than $10,000 per violation, except that: penalties may be assessed against individuals only for willful violations, and, where a grossly negligent violation or a pattern of repeated violations has created an imminent hazard of death or injury to persons, or has caused death or injury, a penalty not to exceed $20,000 per violation may be assessed. Each day a violation continues shall constitute a separate offense. See appendix A to this part for a statement of agency civil penalty policy.

[54 FR 33229, Aug. 14, 1989]

§231.1 Box and other house cars built or placed in service before October 1, 1966.

Except for box and other house cars that comply with either §231.27 or §231.28, each box and other house car shall be equipped to meet the following specifications:

(a) *Handbrake*—(1) *Number.* One efficient handbrake which shall operate in harmony with the power brake installed on the car. Each such handbrake shall (i) provide the same degree of safety as the design shown on plate A, or (ii) provide the same degree of safety as that specified in §231.27.

(2) *Dimensions.* (i) The brake shaft shall be not less than 1¼ inches in diameter, of wrought iron or steel without weld.

(ii) The brake wheel may be flat or dished, not less than 15, preferably 16, inches in diameter, of malleable iron, wrought iron, or steel.

(3) *Location.* (i) The hand brake shall be so located that it can be safely operated while car is in motion.

(ii) The brake shaft shall be located on end of car, to the left of and not less than 17 nor more than 22 inches from center.

(iii) Carriers are not required to change the brakes from right to left side on steel or steel-underframe cars with platform end sills in service July 1, 1911, except when such appliances are renewed, at which time they must be made to comply with the standards prescribed.

(iv) Carriers are not required to change the location of brake wheels and brake shafts on cars in service July 1, 1911, where the appliances are within 3 inches of the required location, except that when cars undergo regular repairs they must then be made to comply with the standards prescribed.

(4) *Manner of application.* (i) There shall be not less than 4 inches clearance around rim of brake wheel.

(ii) Outside edge of brake wheel shall be not less than 4 inches from a vertical plane parallel with end of car and passing through the inside face of knuckle when closed with coupler horn against the buffer block or end sill.

(iii) Top brake-shaft support shall be fastened with not less than ½-inch bolts or rivets. (See plate A.)

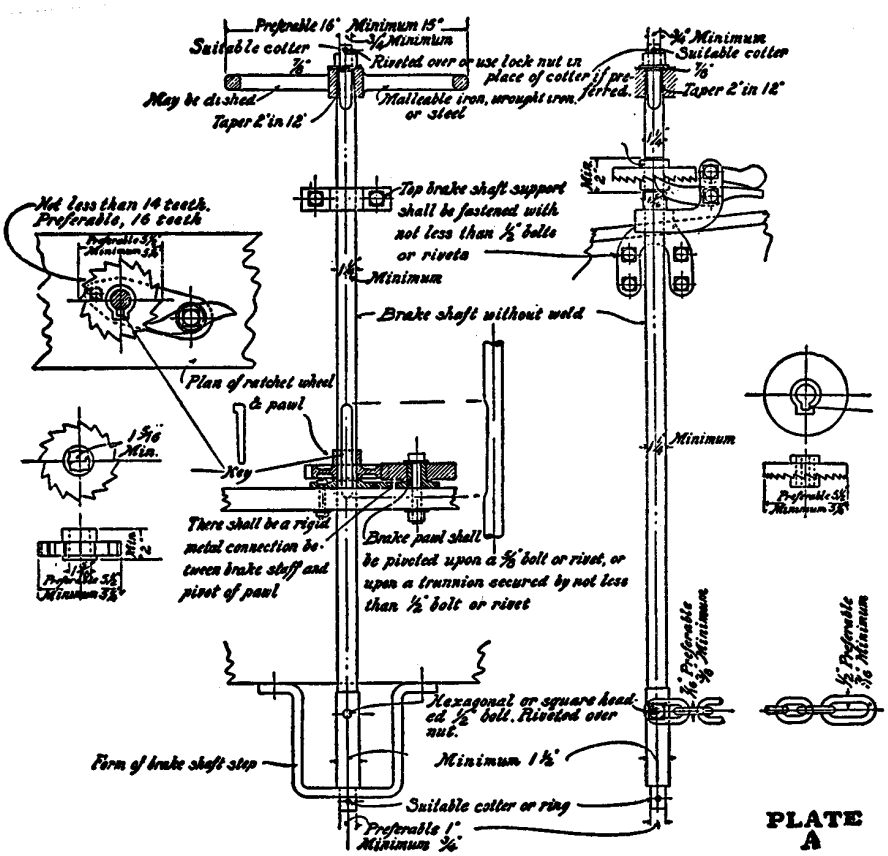

(iv) A brake-shaft step shall support the lower end of brake shaft. A brake-shaft step which will permit the brake chain to drop under the brake shaft shall not be used. U-shaped form of

brakeshaft step is preferred. (See plate A.)

(v) Brake shaft shall be arranged with a square fit at its upper end to secure the hand-brake wheel; said square fit shall be not less than seven-eighths of an inch square. Square-fit taper, nominally 2 in 12 inches. (See plate A.)

(vi) Brake chain shall be of not less than ⅜-, preferably 7⁄16-, inch wrought iron or steel, with a link on the brakerod end of not less than 7⁄16-, preferably ½-, inch wrought iron or steel, and shall be secured to brake-shaft drum by not less than ½-inch hexagon or square-headed bolt. Nut on said bolt shall be secured by riveting end of bolt over nut. (See plate A.)

(vii) Lower end of brake shaft shall be provided with a trunnion of not less than ¾-, preferably 1, inch in diameter extending through brake-shaft step and held in operating position by a suitable cotter or ring. (See plate A.)

(viii) Brake-shaft drum shall be not less than 1½ inches in diameter. (See plate A.)

(ix) Brake ratchet wheel shall be secured to brake shaft by a key or square fit; said square fit shall be not less than 1⁵⁄16 inches square. When ratchet wheel with square fit is used, provision shall be made to prevent ratchet wheel from rising on shaft to disengage brake pawl. (See plate A.)

(x) Brake ratchet wheel shall be not less than 5¼, preferably 5½, inches in diameter and shall have not less than 14, preferably 16, teeth. (See plate A.)

(xi) If brake ratchet wheel is more than 36 inches from brake wheel, a brake-shaft support shall be provided to support this extended upper portion of brake shaft; said brake-shaft support shall be fastened with not less than ½-inch bolts or rivets.

(xii) The brake pawl shall be pivoted upon a bolt or rivet not less than five-eighths of an inch in diameter, or upon a trunnion secured by not less than ½-inch bolt or rivet, and there shall be a rigid metal connection between brake shaft and pivot of pawl.

(xiii) Brake wheel shall be held in position on brake shaft by a nut on a threaded extended end of brake shaft; said threaded portion shall be not less than three-fourths of an inch in diameter; said nut shall be secured by riveting over or by the use of a lock nut or suitable cotter.

(xiv) Brake wheel shall be arranged with a square fit for brake shaft in hub of said wheel; taper of said fit, nominally 2 in 12 inches. (See plate A.)

(b) *Brake step.* If brake step is used, it shall be not less than 28 inches in length. Outside edge shall be not less than 8 inches from face of car and not less than 4 inches from a vertical plane parallel with end of car and passing through the inside face of knuckle when closed with coupler horn against the buffer block or end sill.

(1) *Manner of application.* Brake step shall be supported by not less than two metal braces having a minimum cross-sectional area ⅜ by 1½ inches or equivalent, which shall be securely fastened to body of car with not less than ½-inch bolts or rivets.

(c) *Running boards*—(1) *Number.* One longitudinal running board. On outside-metal-roof cars two latitudinal extensions.

(2) *Dimensions.* Longitudinal running board shall be not less than 18 and preferably 20 inches in width. Latitudinal extensions shall be not less than 24 inches in width. Wooden running boards or extensions hereafter installed shall be constructed of wood not less than 1⅛ inches in thickness.

(3) *Location.* Full length of car, center of roof. On outside-metal-roof cars there shall be two latitudinal extensions from longitudinal running board to ladder locations, except on refrigerator cars where such latitudinal extensions cannot be applied on account of ice hatches.

(4) *Manner of application.* (i) Running board shall be continuous from end to end and not cut or hinged at any point: *Provided,* That the length and width of running board may be made up of a number of pieces securely fastened to saddle-blocks with screws, bolts, or rivets.

(ii) The ends of longitudinal running board shall be not less than 6 nor more than 10 inches from a vertical plane parallel with end of car and passing through the inside face of knuckle when closed with coupler-horn against the buffer-block or endsill; and if more than 4 inches from edge of roof of car,

shall be securely supported their full width by substantial metal braces.

(iii) Running board shall be securely fastened to car and be made of wood or of material which provides the same as or a greater degree of safety than wood of 1⅛ inches thickness. When made of material other than wood the tread surface shall be of anti-skid design and constructed with sufficient open space to permit the elimination of snow and ice from the tread surface.

(d) *Sill steps*—(1) *Number.* Four.

(2) *Dimensions.* Minimum cross-sectional area ½ by 1½ inches, or equivalent, of wrought iron or steel. Minimum length of tread, 10, preferably 12, inches. Minimum clear depth, 8 inches.

(3) *Location.* (i) One near each end of each side of car, so that there shall be not more than 18 inches from end of car to center of tread of sill step.

(ii) Outside edge of tread of step shall be not more than 4 inches inside of face of side of car, preferably flush with side of car.

(iii) Tread shall be not more than 24, preferably not more than 22, inches above the top of rail.

(iv) Carriers are not required to change location of sill steps on cars in service July 1, 1911, where the appliances are within 3 inches of the required location, except that when cars undergo regular repairs they must then be made to comply with the standards prescribed.

(4) *Manner of application.* (i) Sill steps exceeding 21 inches in depth shall have an additional tread.

(ii) Sill steps shall be securely fastened with not less than ½-inch bolts with nuts outside (when possible) and riveted over, or with not less than ½-inch rivets.

(e) *Ladders*—(1) *Number.* Four.

(2) *Dimensions.* (i) Minimum clear length of tread: Side ladders 16 inches; end ladders 14 inches. Maximum spacing between ladder treads, 19 inches.

(ii) Top ladder tread shall be located not less than 12 nor more than 18 inches from roof at eaves.

(iii) Spacing of side ladder treads shall be uniform within a limit of 2 inches from top ladder tread to bottom tread of ladder.

(iv) Maximum distance from bottom tread of side ladder to top tread of sill step, 21 inches.

(v) End ladder treads shall be spaced to coincide with treads of side ladders, a variation of 2 inches being allowed. Where construction of car will not permit the application of a tread of end ladder to coincide with bottom tread of side ladder, the bottom tread of end ladder must coincide with second tread from bottom of side ladder.

(vi) Hardwood treads, minimum dimensions 1½ by 2 inches.

(vii) Iron or steel treads, minimum diameter five-eighths of an inch.

(viii) Minimum clearance of treads, 2, preferably 2½, inches.

(3) *Location.* (i) One on each side, not more than 8 inches from right end of car; one on each end, not more than 8 inches from left side of car; measured from inside edge of ladder stile or clearance of ladder treads to corner of car.

(ii) Carriers are not required to change the location of ladders on cars in service July 1, 1911, where the appliances are within 3 inches of the required location, except that when cars undergo regular repairs they must then be made to comply with the standards prescribed.

(iii) Carriers are not required to change the end ladders on steel or steel underframe cars with platform end sill, in service July 1, 1911, except when such appliances are renewed, at which time they must be made to comply with the standards prescribed.

(4) *Manner of application.* (i) Metal ladders without stiles near corners of cars shall have foot guards or upward projections not less than 2 inches in height near inside end of bottom treads.

(ii) Stiles of ladders, projecting 2 or more inches from face of car, will serve as foot guards.

(iii) Ladders shall be securely fastened with not less than ½-inch bolts with nuts outside (when possible) and riveted over, or with not less than ½-inch rivets. Three-eighths-inch bolts may be used for wooden treads which are gained into stiles.

(f) *End ladder clearance.* (1) No part of car above end sills within 30 inches from side of car, except buffer block,

brake shaft, brake wheel, brake step, running board or uncoupling lever shall extend to within 12 inches of a vertical plane parallel with end of car and passing through the inside face of knuckle when closed with coupler horn against the buffer block or end sill, and no other part of end of car or fixtures on same above end sills, other than exceptions herein noted, shall extend beyond the outer face of buffer block.

(2) Carriers are not required to make changes to secure additional end-ladder clearance on cars in service July 1, 1911, that have 10 or more inches end-ladder clearance, within 30 inches of side of car, until car is shopped for work amounting to practically rebuilding body of car, at which time they must be made to comply with the standards prescribed.

(g) *Roof handholds*—(1) *Number.* (i) One over each ladder.

(ii) One right-angle handhold may take the place of two adjacent specified roof handholds, provided the dimensions and locations coincide, and that an extra leg is securely fastened to car at point of angle.

(2) *Dimensions.* Minimum diameter, five-eighths of an inch, wrought iron or steel. Minimum clear length, 16 inches. Minimum clearance, 2, preferably 2½ inches.

(3) *Location.* (i) On roof of car, one parallel to treads of each ladder, not less than 8 nor more than 15 inches from edge of roof, except on refrigerator cars where ice hatches prevent, when location may be nearer edge of roof.

(ii) Carriers are not required to change the location of handholds on cars in service July 1, 1911, except end handhold under end sills, where the appliances are within 3 inches of the required location, except that when cars undergo regular repairs they must then be made to comply with the standards prescribed.

(4) *Manner of application.* Roof handholds shall be securely fastened with not less than ½-inch bolts with nuts outside (when possible) and riveted over, or with not less than ½-inch rivets.

(h) *Side handholds*—(1) *Number.* Four. (Tread of side ladder is a side handhold.)

(2) *Dimensions.* Minimum diameter, five-eighths of an inch, wrought iron or steel. Minimum clear length, 16 inches, preferably 24 inches. Minimum clearance, 2, preferably 2½, inches.

(3) *Location.* (i) Horizontal, one near each end on each side of car. Side handholds shall be not less than 24 nor more than 30 inches above center line of coupler, except as provided above, where tread of ladder is a handhold. Clearance of outer end of handhold shall be not more than 8 inches from end of car.

(ii) Carriers are not required to change the location of handholds, on cars in service July 1, 1911, except end handholds under end sills, where the appliances are within 3 inches of the required location, except that when cars undergo regular repairs they must then be made to comply with the standards prescribed.

(4) *Manner of application.* Side handholds shall be securely fastened with not less than ½-inch bolts with nuts outside (when possible) and riveted over, or with not less than ½-inch rivets.

(i) *Horizontal end handholds*—(1) *Number.* Eight or more, four on each end of car. (Tread of end ladder is an end handhold.)

(2) *Dimensions.* (i) Minimum diameter, five-eighths of an inch, wrought iron or steel. Minimum clear length, 16 inches, preferably 24 inches.

(ii) A handhold 14 inches in length may be used where it is impossible to use one 16 inches in length.

(iii) Minimum clearance, 2, preferably 2½, inches.

(3) *Location.* (i) One near each side on each end of car, not less than 24 nor more than 30 inches above center line of coupler, except as provided above, when tread of end ladder is an end handhold. Clearance of outer end of handhold shall be not more than 8 inches from side of car.

(ii) One near each side of each end of car on face of end sill or sheathing over end sill, projecting outward or downward. Clearance of outer end of handhold shall be not more than 16 inches from side of car.

(iii) On each end of cars with platform end sills 6 or more inches in

width, measured from end post or siding and extending entirely across end of car, there shall be one additional end handhold not less than 24 inches in length, located near center of car, not less than 30 nor more than 60 inches above platform end sill.

(iv) Carriers are not required to change the location of handholds, on cars in service July 1, 1911, except end handholds under end sills, where the appliances are within 3 inches of the required location, except that when cars undergo regular repairs they must then be made to comply with the standards prescribed.

(4) *Manner of application.* Horizontal end handholds shall be securely fastened with not less than ½-inch bolts with nuts outside (when possible) and riveted over, or with not less than ½-inch rivets.

(j) *Vertical end handholds*—(1) *Number.* Two on full-width platform end-sill cars, as heretofore described.

(2) *Dimensions.* Minimum diameter, five-eighths of an inch, wrought iron or steel. Minimum clear length, 18, preferably 24, inches. Minimum clearance, 2, preferably 2½, inches.

(3) *Location.* (i) One on each end of car opposite ladder, not more than 8 inches from side of car; clearance of bottom end of handhold shall be not less than 24 nor more than 30 inches above center line of coupler.

(ii) Carriers are not required to change the location of handholds, on cars in service July 1, 1911, except end handholds under end sills, where the appliances are within 3 inches of the required location, except that when cars undergo regular repairs they must then be made to comply with the standards prescribed.

(4) *Manner of application.* Vertical end handholds shall be securely fastened with not less than ½-inch bolts with nuts outside (when possible) and riveted over, or with not less than ½-inch rivets.

(k) *Uncoupling levers*—(1) *Number.* Two. Uncoupling levers may be either single or double, and of any efficient design.

(2) *Dimensions.* (i) Handles of uncoupling levers, except those shown on plate B or of similar designs, shall be not more than 6 inches from sides of car.

(ii) Uncoupling levers of design shown on plate B and of similar designs shall conform to the following prescribed limits:

(iii) Handles shall be not more than 12, preferably 9, inches from sides of cars. Center lift arms shall be not less than 7 inches long.

(iv) Center of eye at end of center lift arm shall be not more than 3½ inches beyond center of eye of uncoupling pin of coupler when horn of coupler is against the buffer block or end sill. (See plate B.)

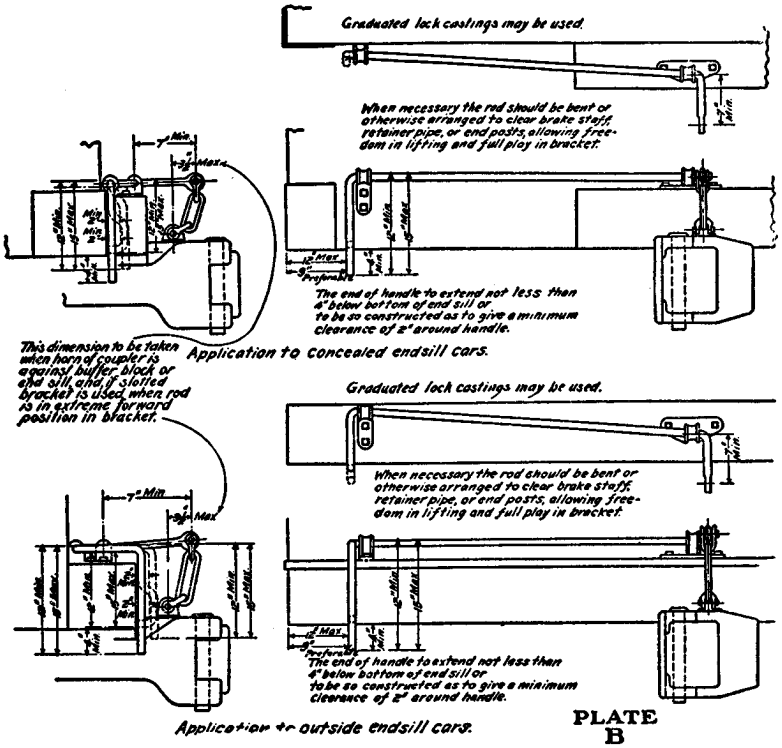

(v) Ends of handles shall extend not less than 4 inches below bottom of end sill or shall be so constructed as to give a minimum clearance of 2 inches around handle. Minimum drop of handles shall be 12 inches; maximum, 15 inches over all. (See plate B.)

(vi) Handles of uncoupling levers of the ''rocking'' or ''push-down'' type shall be not less than 18 inches from top of rail when lock block has released knuckle, and a suitable stop shall be provided to prevent inside arm from flying up in case of breakage.

(3) *Location.* One on each end of car. When single lever is used, it shall be placed on left side of end of car.

(Secs. 2, 4, and 6, 27 Stat. 531, as amended; secs, 1 and 3, 32 Stat. 943, as amended; sec. 6(e) and (f), 80 Stat. 939 (45 U.S.C. 2, 4, 6, 8, and 10, 11–16 and 49 U.S.C. 103(c)(1))

[33 FR 19663, Dec. 25, 1968, as amended at 49 FR 26745, June 29, 1984]

§231.2 Hopper cars and high-side gondolas with fixed ends.

(Cars with sides more than 36 inches above the floor are high-side cars.)

(a) *Hand brakes*—(1) *Number.* Same as specified for ''Box and other house cars'' (see §231.1(a)(1)).

(2) *Dimensions.* Same as specified for ''Box and other house cars'' (see §231.1(a)(2)).

(3) *Location.* (i) Each hand brake shall be so located that it can be safely operated while car is in motion.

(ii) The brake shaft shall be located on end of car to the left of, and not more than 22 inches from, center.

(iii) Carriers are not required to change the brakes from right to left side on steel or steel-underframe cars with platform end sills, in service July 1, 1911, except when such appliances are renewed, at which time they must be

made to comply with the standards prescribed.

(iv) Carriers are not required to change the location of brake wheels and brake shafts on cars in service July 1, 1911, where the appliances are within 3 inches of the required location, except that when cars undergo regular repairs they must then be made to comply with the standards prescribed.

(4) *Manner of application.* Same as specified for ''Box and other house cars'' (see § 231.1(a)(4)).

(b) *Brake step.* Same as specified for ''Box and other house cars'' (see § 231.1 (b)).

(c) *Sill steps.* Same as specified for ''Box and other house cars'' (see § 231.1(d)).

(d) *Ladders*—(1) *Number.* Same as specified for ''Box and other house cars'' (see § 231.1(e)(1)).

(2) *Dimensions.* Same as specified for ''Box and other house cars'' (see § 231.1(e)(2)), except that top ladder tread shall be located not more than 4 inches from top of car.

(3) *Location.* Same as specified for ''Box and other house cars'' (see § 231.1(e)(3)).

(4) *Manner of application.* Same as specified for ''Box and other house cars'' (see § 231.1(e)(4)).

(e) *Side handholds.* Same as specified for ''Box and other house cars'' (see § 231.1(h)).

(f) *Horizontal end handholds.* Same as specified for ''Box and other house cars'' (see § 231.1(i)).

(g) *Vertical end handholds.* Same as specified for ''Box and other house cars'' (see § 231.1(j)).

(h) *Uncoupling levers.* Same as specified for ''Box and other house cars'' (see § 231.1(k)).

(i) *End-ladder clearance.* (1) No part of car above end sills within 30 inches from side of car, except buffer block, brake shaft, brake wheel, brake step, or uncoupling lever shall extend to within 12 inches of a vertical plane parallel with end of car and passing through the inside face of knuckle when closed with coupler horn against the buffer block or end sill, and no other part of end of car or fixtures on same above end sills, other than exceptions herein noted, shall extend beyond the outer face of buffer block.

(2) Carriers are not required to make changes to secure additional end-ladder clearance on cars in service July 1, 1911, that have 10 or more inches end-ladder clearance within 30 inches of side of car, until car is shopped for work amounting to practically rebuilding body of car, at which time they must be made to comply with the standards prescribed.

§ 231.3 Drop-end high-side gondola cars.

(a) *Hand brakes*—(1) *Number.* Same as specified for ''Box and other house cars'' (see § 231.1(a)(1)).

(2) *Dimensions.* Same as specified for ''Box and other house cars'' (see § 231.1(a)(2)).

(3) *Location.* (i) Each hand brake shall be so located that it can be safely operated while car is in motion.

(ii) The brake shaft shall be located on end of car to the left of center.

(iii) Carriers are not required to change the brakes from right to left side on steel or steel-underframe cars with platform end sills, in service July 1, 1911, except when such appliances are renewed, at which time they must be made to comply with the standards prescribed.

(4) *Manner of application.* Same as specified for ''Box and other house cars'' (see § 231.1(a)(4)).

(b) *Sill steps.* Same as specified for ''Box and other house cars'' (see § 231.1(d)).

(c) *Ladders*—(1) *Number.* Two.

(2) *Dimensions.* Same as specified for ''Box and other house cars'' (see § 231.1(e)(2)), except that top ladder tread shall be located not more than 4 inches from top of car.

(3) *Location.* (i) One on each side, not more than 8 inches from right end of car, measured from inside edge of ladder stile or clearance of ladder treads to corner of car.

(ii) Carriers are not required to change the location of ladders on cars in service July 1, 1911, where the appliances are within 3 inches of the required location, except that when cars undergo regular repairs they must then be made to comply with the standards prescribed.

(4) *Manner of application.* Same as specified for ''Box and other house cars'' (see §231.1(e)(4)).

(d) *Side handholds.* Same as specified for ''Box and other house cars'' (see §231.1(h)).

(e) *Horizontal end handholds*—(1) *Number.* Four.

(2) *Dimensions.* Same as specified for ''Box and other house cars'' (see §231.1(i)(2)).

(3) *Location.* (i) One near each side of each end of car on face of end sill. Clearance of outer end of handhold shall be not more than 16 inches from side of car.

(ii) Carriers are not required to change the location of handholds on cars in service July 1, 1911, except end handholds under end sills, where the appliances are within 3 inches of the required location, except that when cars undergo regular repairs they must then be made to comply with the standards prescribed.

(4) *Manner of application.* Same as specified for ''Box and other house cars'' (see §231.1(i)(4)).

(f) *Uncoupling levers.* Same as specified for ''Box and other house cars'' (see §231.1(k)).

(g) *End ladder clearance.* (1) No part of car above end sills within 30 inches from side of car, except buffer block, brake shaft, brake wheel or uncoupling lever shall extend to within 12 inches of a vertical plane parallel with end of car and passing through the inside face of knuckle when closed with coupler horn against the buffer block or end sill, and no other part of end of car or fixtures on same above end sills, other than exceptions noted in this subparagraph, shall extend beyond the outer face or buffer block.

(2) Carriers are not required to make changes to secure additional end-ladder clearance on cars in service July 1, 1911, that have 10 or more inches end-ladder clearance, within 30 inches of side of car, until car is shopped for work amounting to practically rebuilding body of car, at which time they must be made to comply with the standards prescribed.

§231.4 Fixed-end low-side gondola and low-side hopper cars.

(Cars with sides 36 inches or less above the floor are low-side cars.)

(a) *Hand brakes*—(1) *Number.* Same as specified for ''Box and other house cars'' (see §231.1(a)(1)).

(2) *Dimensions.* Same as specified for ''Box and other house cars'' (see §231.1(a)(2)).

(3) *Location.* (i) Each hand brake shall be so located that it can be safely operated while car is in motion.

(ii) The brake shaft shall be located on end of car, to the left of and not more than 22 inches from center.

(iii) Carriers are not required to change the brakes from right to left side on steel or steel-underframe cars with platform end sills, in service July 1, 1911, except when such appliances are renewed, at which time they must be made to comply with the standards prescribed.

(iv) Carriers are not required to change the location of brake wheels and brake shafts on cars in service July 1, 1911, where the appliances are within 3 inches of the required location, except that when cars undergo regular repairs they must then be made to comply with the standards prescribed.

(4) *Manner of application.* Same as specified for ''Box and other house cars'' (see §231.1(a)(4)).

(b) *Brake step.* Same as specified for ''Box and other house cars'' (see §231.1(b)).

(c) *Sill steps.* Same as specified for ''Box and other house cars'' (see §231.1(d)).

(d) *Side handholds*—(1) *Number.* Same as specified for ''Box and other house cars'' (see §231.1(h)(1)).

(2) *Dimensions.* Same as specified for ''Box and other house cars'' (see §231.1(h)(2)).

(3) *Location.* (i) Horizontal, one near each end on each side of car, not less than 24 nor more than 30 inches above center line of coupler, if car construction will permit, but handhold shall not project above top of side. Clearance of outer end of handhold shall be not more than 8 inches from end of car.

(ii) Carriers are not required to change the location of handholds on

cars in service July 1, 1911, except end handholds under end sills, where the appliances are within 3 inches of the required location, except that when cars undergo regular repairs they must then be made to comply with the standards prescribed.

(4) *Manner of application.* Same as specified for ''Box and other house cars'' (see § 231.1(h)(4)).

(e) *Horizontal end handholds*—(1) *Number.* Same as specified for ''Box and other house cars'' (see § 231.1(i)(1)).

(2) *Dimensions.* Same as specified for ''Box and other house cars'' (see § 231.1(i)(2)).

(3) *Location.* (i) One near each side on each end of car, not less than 24 nor more than 30 inches above center line of coupler, if car construction will permit. Clearance of outer end of handhold shall be not more than 8 inches from side of car.

(ii) One near each side of each end of car on face of end sill, projecting outward or downward. Clearance of outer end of handhold shall be not more than 16 inches from side of car.

(iii) Carriers are not required to change the location of handholds on cars in service July 1, 1911, except end handholds under end sills, where the appliances are within 3 inches of the required location, except that when cars undergo regular repairs they must then be made to comply with the standards prescribed.

(4) *Manner of application.* Same as specified for ''Box and other house cars'' (see § 231.1(i)(4)).

(f) *Uncoupling levers.* Same as specified for ''Box and other house cars'' (see § 231.1(k)).

(g) *End-ladder clearance.* (1) No part of car above end sills within 30 inches from side of car, except buffer block, brake shaft, brake step, brake wheel or uncoupling lever shall extend to within 12 inches of a vertical plane parallel with end of car and passing through the inside face of knuckle when closed with coupler horn against the buffer block or end sill, and no other part of end of car or fixtures on same above end sills, other than exceptions noted in this subparagraph, shall extend beyond the outer face of buffer block.

(2) Carriers are not required to make changes to secure additional end-ladder clearance on cars in service July 1, 1911, that have 10 or more inches end-ladder clearance, within 30 inches of side of car, until car is shopped for work amounting to practically rebuilding body of car, at which time they must be made to comply with the standards prescribed.

§ 231.5 Drop-end low-side gondola cars.

(a) *Hand brakes*—(1) *Number.* Same as specified for ''Box and other house cars'' (see § 231.1(a)(1)).

(2) *Dimensions.* Same as specified for ''Box and other house cars'' (see § 231.1(a)(2)).

(3) *Location.* (i) Each hand brake shall be so located that it can be safely operated while car is in motion.

(ii) The brake shaft shall be located on end of car to the left of center.

(iii) Carriers are not required to change the brakes from right to left side on steel or steel-underframe cars with platform end sills, in service July 1, 1911, except when such appliances are renewed, at which time they must be made to comply with the standards prescribed.

(4) *Manner of application.* Same as specified for ''Box and other house cars'' (see § 231.1(a)(4)), provided that top brake-shaft support may be omitted.

(b) *Sill steps.* Same as specified for ''Box and other house cars'' (see § 231.1(d)).

(c) *Side handholds*—(1) *Number.* Same as specified for ''Box and other house cars'' (see § 231.1(h)(1)).

(2) *Dimensions.* Same as specified for ''Box and other house cars'' (see § 231.1(h)(2)).

(3) *Location.* (i) Horizontal, one near each end on each side of car, not less than 24 nor more than 30 inches above center line of coupler, if car construction will permit, but handhold shall not project above top of side. Clearance of outer end of handhold shall be no more than 8 inches from end of car.

(ii) Carriers are not required to change the location of handholds on cars in service July 1, 1911, except end handholds under end sills, where the appliances are within 3 inches of the required location, except that when cars undergo regular repairs they must

then be made to comply with the standards prescribed.

(4) *Manner of application.* Same as specified for ''Box and other house cars'' (see §231.1(h)(4)).

(d) *End handholds*—(1) *Number.* Four.

(2) *Dimensions.* Same as specified for ''Box and other house cars'' (see §231.1(i)(2)).

(3) *Location.* (i) Horizontal, one near each side of each end of car on face of end sill. Clearance of outer end of handhold shall be not more than 16 inches from side of car.

(ii) Carriers are not required to change the location of handholds on cars in service July 1, 1911, except end handholds under end sills, where the appliances are within 3 inches of the required location, except that when cars undergo regular repairs they must then be made to comply with the standards prescribed.

(4) *Manner of application.* Same as specified for ''Box and other house cars'' (see §231.1(i)(4)).

(e) *Uncoupling levers.* Same as specified for ''Box and other house cars'' (see §231.1(k)).

(f) *End-ladder clearance.* (1) No part of car above end sills within 30 inches from side of car, except buffer block, brake shaft, brake wheel or uncoupling lever shall extend to within 12 inches of a vertical plane parallel with end of car and passing through the inside face of knuckle when closed with coupler horn against the buffer block or end sill, and no other part of end of car or fixtures on same above end sills, other than exceptions noted in this subparagraph shall extend beyond the outer face of buffer block.

(2) Carriers are not required to make changes to secure additional end-ladder clearance on cars in service July 1, 1911, that have 10 or more inches end-ladder clearance, within 30 inches of side of car, until car is shopped for work amounting to practically rebuilding body of car, at which time they must be made to comply with the standards prescribed.

§231.6 Flat cars.

(Cars with sides 12 inches or less above the floor may be equipped the same as flat cars.)

(a) *Hand brakes*—(1) *Number.* Same as specified for ''Box and other house cars'' (see §231.1(a)(1)).

(2) *Dimensions.* Same as specified for ''Box and other house cars'' (see §231(a)(2)).

(3) *Location.* (i) Each hand brake shall be so located that it can be safely operated while car is in motion.

(ii) The brake shaft shall be located on the end of car to the left of center, or on side of car not more than 36 inches from right-hand end thereof.

(iii) Carriers are not required to change the brakes from right to left side on steel or steel-underframe cars with platform end sills, in service July 1, 1911, except when such appliances are renewed, at which time they must be made to comply with the standards prescribed.

(iv) Carriers are not required to change the location of brake wheels and brake shafts on cars in service July 1, 1911, where the appliances are within 3 inches of the required location, except that when cars undergo regular repairs they must then be made to comply with the standards prescribed.

(4) *Manner of application.* Same as specified for ''Box and other house cars'' (see §231.1(a)(4)).

(b) *Sill steps.* Same as specified for ''Box and other house cars'' (see §231.1(d)).

(c) *Side handholds*—(1) *Number.* Same as specified for ''Box and other house cars'' (see §231.1(h)(1)).

(2) *Dimensions.* Same as specified for ''Box and other house cars'' (see §231.1(h)(2)).

(3) *Location.* (i) Horizontal, one on face of each side sill near each end. Clearance of outer end of handhold shall be not more than 12 inches from end of car.

(ii) Carriers are not required to change the location of handholds on cars in service July 1, 1911, except end handholds under end sills, where the appliances are within 3 inches of the required location, except that when cars undergo regular repairs they must then be made to comply with the standards prescribed.

(4) *Manner of application.* Same as specified for ''Box and other house cars'' (see §231.1(h)(4)).

(d) *End handholds*—(1) *Number.* Four.

(2) *Dimensions.* Same as specified for ''Box and other house cars'' (see § 231.1(i)(2)).

(3) *Location.* (i) Horizontal, one near each side of each end of car on face of end sill. Clearance of outer end of handhold shall be not more than 16 inches from side of car.

(ii) Carriers are not required to change the location of handholds on cars in service July 1, 1911, except end handholds under end sills, where the appliances are within 3 inches of the required location, except that when cars undergo regular repairs they must then be made to comply with the standards prescribed.

(4) *Manner of application.* Same as specified for ''Box and other house cars'' (see § 231.1(i)(4)).

(e) *Uncoupling levers.* Same as specified for ''Box and other house cars'' (see § 231.1(k)).

§ 231.7 Tank cars with side platforms.

(a) *Hand brakes*—(1) *Number.* Same as specified for ''Box and other house cars'' (see § 231.1(a)(1)).

(2) *Dimensions.* Same as specified for ''Box and other house cars'' (see § 231.1(a)(2)).

(3) *Location.* (i) Each hand brake shall be so located that it can be safely operated while car is in motion.

(ii) The brake shaft shall be located on end of car to the left of center.

(iii) Carriers are not required to change the brakes from right to left side on steel or steel-underframe cars with platform end sills in service July 1, 1911, except when such appliances are renewed, at which time they must be made to comply with the standards prescribed.

(4) *Manner of application.* Same as specified for ''Box and other house cars'' (see § 231.1(a)(4)).

(b) *Sill steps.* Same as specified for ''Box and other house cars'' (see § 231.1(d)).

(c) *Side handholds*—(1) *Number.* Four or more.

(2) *Dimensions.* Same as specified for ''Box and other house cars'' (see § 231.1(h)(2)).

(3) *Location.* (i) Horizontal, one on face of each side sill near each end. Clearance of outer end of handhold shall be not more than 12 inches from end of car.

(ii) If side safety railings are attached to tank or tank bands, four additional vertical handholds shall be applied, one as nearly as possible over each sill step and securely fastened to tank or tankband.

(iii) Carriers are not required to change the location of handholds on cars in service July 1, 1911, except end handholds under end sills, where the appliances are within 3 inches of the required location, except that when cars undergo regular repairs they must then be made to comply with the standards prescribed.

(4) *Manner of application.* Same as specified for ''Box and other house cars'' (see § 231.1(h)(4)).

(d) *End handholds*—(1) *Number.* Four.

(2) *Dimensions.* Same as specified for ''Box and other house cars'' (see § 231.1(i)(2)).

(3) *Location.* (i) Horizontal, one near each side of each end of car on face of end sill. Clearance of outer end of handhold shall be not more than 16 inches from side of car.

(ii) Carriers are not required to change the location of handholds on cars in service July 1, 1911, except end handholds under end sills, where the appliances are within 3 inches of the required location, except that when cars undergo regular repairs they must then be made to comply with the standards prescribed.

(4) *Manner of application.* Same as specified for ''Box and other house cars'' (see § 231.1(i)(4)).

(e) *Tank-head handholds*—(1) *Number.* Two. (Not required if safety railing runs around ends of tank.)

(2) *Dimensions.* Minimum diameter, five-eighths of an inch, wrought iron or steel. Minimum clearance, 2, preferably 2½, inches. Clear length of handholds shall extend to within 6 inches of outer diameter of tank at point of application.

(3) *Location.* (i) Horizontal, one across each head of tank not less than 30 nor more than 60 inches above platform.

(ii) Carriers are not required to change the location of handholds on cars in service July 1, 1911, except end handholds under end sills, where the appliances are within 3 inches of the

required location, except that when cars undergo regular repairs they must then be made to comply with the standards prescribed.

(4) *Manner of application.* Tankhead handholds shall be securely fastened.

(f) *Safety railings*—(1) *Number.* One continuous safety railing running around sides and ends of tank, securely fastened to tank or tank bands at ends and sides of tank; or two running full length of tank at sides of cars supported by posts.

(2) *Dimensions.* Not less than three-fourths of an inch, iron.

(3) *Location.* Running full length of tank either at side supported by posts or securely fastened to tank or tank bands, not less than 30 nor more than 60 inches above platform.

(4) *Manner of application.* Safety railings shall be securely fastened to tank body, tank bands, or posts.

(g) *Uncoupling levers.* Same as specified for ''Box and other house cars'' (see §231.1(k)).

(h) *End-ladder clearance.* (1) No part of car above end sills within 30 inches from side of car, except buffer block, brake shaft, brake-shaft brackets, brake wheel or uncoupling level shall extend to within 12 inches of a vertical plane parallel with end of car and passing through the inside face of knuckle when closed with coupler horn against the buffer block or end sill, and no other part of end of car or fixtures on same above end sills, other than exceptions noted in this subparagraph, shall extend beyond the outer face of buffer block.

(2) Carriers are not required to make changes to secure additional end-ladder clearance on cars in service July 1, 1911, that have 10 or more inches end-ladder clearance, within 30 inches of side of car, until car is shopped for work amounting to practically rebuilding body of car, at which time they must be made to comply with the standards prescribed.

§231.8 Tank cars without side sills and tank cars with short side sills and end platforms.

(a) *Hand brakes*—(1) *Number.* Same as specified for ''Box and other house cars'' (see §231.1(a)(1)).

(2) *Dimensions.* Same as specified for ''Box and other house cars'' (see §231.1(a)(2)).

(3) *Location.* (i) Each hand brake shall be so located that it can be safely operated while car is in motion.

(ii) The brake shaft shall be located on end of car to the left of center.

(iii) Carriers are not required to change the brakes from right to left side on steel or steel-underframe cars with platform end sills, in service July 1, 1911, except when such appliances are renewed, at which time they must be made to comply with the standards prescribed.

(4) *Manner of application.* Same as specified for ''Box and other house cars'' (see §231.1(a)(4)).

(b) *Running boards*—(1) *Number.* One continuous running board around sides and ends; or two running full length of tank, one on each side.

(2) *Dimensions.* Minimum width on sides, 10 inches. Minimum width on ends, 6 inches.

(3) *Location.* Continuous around sides and ends of cars. On tank cars having end platforms extending to bolsters, running boards shall extend from center to center of bolsters, one on each side.

(4) *Manner of application.* (i) If side running boards are applied below center of tank, outside edge of running boards shall extend not less than 7 inches beyond bulge of tank.

(ii) The running boards at ends of car shall be not less than 6 inches from a point vertically above the inside face of knuckle when closed with coupler horn against the buffer block, end sill or back stop.

(iii) Running boards shall be securely fastened to tank or tank bands.

(c) *Sill steps*—(1) *Number.* Same as specified for ''Box and other house cars'' (see §231.1(d)(1)).

(2) *Dimensions.* Same as specified for ''Box and other house cars'' (see §231.1(d)(2)).

(3) *Location.* (i) One near each end on each side under side handhold.

(ii) Outside edge of tread of step shall be not more than 4 inches inside of face of side of car, preferably flush with side of car.

(iii) Tread shall be not more than 24, preferably not more than 22, inches above the top of rail.

(iv) Carriers are not required to change the location of sill steps on cars in service July 1, 1911, where the appliances are within 3 inches of the required location, except that when cars undergo regular repairs they must then be made to comply with the standards prescribed in said order.

(4) *Manner of application.* Same as specified for ''Box and other house cars'' (see § 231.1(d)(4)).

(d) *Ladders.* (If running boards are so located as to make ladders necessary.)

(1) *Number.* Two on cars with continuous running boards. Four on cars with side running boards.

(2) *Dimensions.* (i) Minimum clear length of tread, 10 inches. Maximum spacing of treads, 19 inches. Hardwood treads, minimum dimensions, 1½ by 2 inches.

(ii) Wrought iron or steel treads, minimum diameter five-eighths of an inch. Minimum clearance, 2, preferably 2½, inches.

(3) *Location.* On cars with continuous running boards, one at right end of each side. On cars with side running boards, one at each end of each running board.

(4) *Manner of application.* Ladders shall be securely fastened with not less than ½-inch bolts or rivets.

(e) *Side handholds*—(1) *Number.* Four or more.

(2) *Dimensions.* Same as specified for ''Box and other house cars'' (see § 231.1(h)(2)).

(3) *Location.* (i) Horizontal, one on face of each side sill near each end on tank cars with short side sills, or one attached to top of running board projecting outward above sill steps or ladders on tank cars without side sills. Clearance of outer end of handhold shall be not more than 12 inches from end of car.

(ii) If side safety railings are attached to tank or tank bands four additional vertical handholds shall be applied, one as nearly as possible over each sill step and securely fastened to tank or tank bands.

(iii) Carriers are not required to change the location of handholds on cars in service July 1, 1911, except end handholds under end sills, where the appliances are within 3 inches of the required location, except that when cars undergo regular repairs they must then be made to comply with the standards prescribed.

(4) *Manner of application.* Same as specified for ''Box and other house cars'' (see § 231.1(h)(4)).

(f) *End handholds*—(1) *Number.* Four.

(2) *Dimensions.* Same as specified for ''Box and other house cars'' (see § 231.1(i)(2)).

(3) *Location.* (i) Horizontal, one near each side of each end of car on face of end sill. Clearance of outer end of handhold shall be not more than 16 inches from side of car.

(ii) Carriers are not required to change the location of handholds on cars in service July 1, 1911, except end handholds under end sills, where the appliances are within 3 inches of the required location, except that when cars undergo regular repairs they must then be made to comply with the standards prescribed.

(4) *Manner of application.* Same as specified for ''Box and other house cars'' (see § 231.1(i)(4)).

(g) *Tank-head handholds*—(1) *Number.* Two. (Not required if safety railing runs around ends of tank.)

(2) *Dimensions.* Minimum diameter, five-eighths of an inch, wrought iron or steel. Minimum clearance, 2, preferably 2½, inches.

(3) *Location.* (i) Horizontal, one across each head of tank not less than 30 nor more than 60 inches above platform on running board. Clear length of handholds shall extend to within 6 inches of outer diameter of tank at point of application.

(ii) Carriers are not required to change the location of handholds on cars in service July 7, 1911, except end handholds under end sills, where the appliances are within 3 inches of the required location, except that when cars undergo regular repairs they must then be made to comply with the standards prescribed.

(4) *Manner of application.* Tankhead handholds shall be securely fastened.

(h) *Safety railings*—(1) *Number.* One running around sides and ends of tank or two running full length of tank.

(2) *Dimensions.* Minimum diameter, seven-eighths of an inch, wrought iron or steel. Minimum clearance, 2½ inches.

(3) *Location.* Running full length of tank, not less than 30 nor more than 60 inches above platform or running board.

(4) *Manner of application.* Safety railings shall be securely fastened to tank or tank bands and secured against end shifting.

(i) *Uncoupling levers.* Same as specified for ''Box and other house cars'' (see §231.1(k)).

(j) *End-ladder clearance.* (1) No part of car above end sills within 30 inches from side of car, except buffer block, brake shaft, brake-shaft brackets, brake wheel, running boards or uncoupling lever shall extend to within 12 inches of a vertical plane parallel with end of car and passing through the inside face of knuckle when closed with coupler horn against the buffer block or end sill, and no other part of end of car or fixtures on same, above end sills, other than exceptions herein noted, shall extend beyond the outer face of buffer block.

(2) Carriers are not required to make changes to secure additional end-ladder clearance on cars in service July 1, 1911, that have 10 or more inches end-ladder clearance, within 30 inches of side of car, until car is shopped for work amounting to practically rebuilding body of car, at which time they must be made to comply with the standards prescribed.

§231.9 Tank cars without end sills.

(a) *Hand brakes*—(1) *Number.* Same as specified for ''Box and other house cars'' (see §231.1(a)(1)).

(2) *Dimensions.* Same as specified for ''Box and other house cars'' (see §231.1(a)(2)).

(3) *Location.* Each hand brake shall be so located that it can be safely operated while car is in motion. The brake shaft shall be located on end of car to the left of center.

(4) *Manner of application.* Same as specified for ''Box and other house cars'' (see §231.1(a)(4)).

(b) *Brake step.* Same as specified for ''Box and other house cars'' (see §231.1(b)).

(c) *Running boards*—(1) *Number.* One.

(2) *Dimensions.* Minimum width on sides, 10 inches. Minimum width on ends, 6 inches.

(3) *Location.* Continuous around sides and ends of tank.

(4) *Manner of application.* (i) If running boards are applied below center of tank, outside edge of running boards shall extend not less than 7 inches beyond bulge of tank.

(ii) Running boards at ends of car shall be not less than 6 inches from a point vertically above the inside face of knuckle when closed with coupler horn against the buffer block, end sill or back stop.

(iii) Running boards shall be securely fastened to tank or tank bands.

(d) *Sill steps*—(1) *Number.* Four. (If tank has high running boards, making ladders necessary, sill steps must meet ladder requirements.)

(2) *Dimensions.* Same as specified for ''Box and other house cars'' (see §231.1(d)(2)).

(3) *Location.* (i) One near each end on each side, flush with outside edge of running board as near end of car as practicable.

(ii) Tread not more than 24, preferably not more than 22, inches above the top of rail.

(iii) Carriers are not required to change the location of handholds on cars in service July 1, 1911, where the appliances are within 3 inches of the required location, except that when cars undergo regular repairs they must then be made to comply with the standards prescribed.

(4) *Manner of application.* (i) Steps exceeding 18 inches in depth shall have an additional tread and be laterally braced.

(ii) Sill steps shall be securely fastened with not less than ½-inch bolts with nuts outside (when possible) and, riveted over, or with ½-inch rivets.

(e) *Side handholds*—(1) *Number.* Four or more.

(2) *Dimensions.* Same as specified for ''Box and other house cars'' (see §231.1(h)(2)).

(3) Location. (i) *Horizontal,* one near each end on each side of car over sill step on running board, not more than 2

inches back from outside edge of running board, projecting downward or outward.

(ii) Where such side handholds are more than 18 inches from end of car, an additional handhold must be placed near each end on each side not more than 30 inches above center line of coupler.

(iii) Clearance of outer end of handhold shall be not more than 12 inches from end of car.

(iv) If safety railings are on tank, four additional vertical handholds shall be applied, one over each sill step on tank.

(v) Carriers are not required to change the location of handholds on cars in service July 1, 1911, except end handholds under end sills, where the appliances are within 3 inches of the required location, except that when cars undergo regular repairs they must then be made to comply with the standards prescribed.

(4) *Manner of application.* Same as specified for ''Box and other house cars'' (see § 231.1(h)(4)).

(f) *End handholds*—(1) *Number.* Four.

(2) *Dimensions.* Same as specified for ''Box and other house cars'' (see § 231.1(i)(2)).

(3) *Location.* (i) Horizontal, one near each side on each end of car on running board, not more than 2 inches back from edge of running board projecting downward or outward, or on end of tank not more than 30 inches above center line of coupler.

(ii) Carriers are not required to change the location of handholds on cars in service July 1, 1911, except end handholds under end sills, where the appliances are within 3 inches of the required location, except that when cars undergo regular repairs they must then be made to comply with the standards prescribed.

(4) *Manner of application.* Same as specified for ''Box and other house cars'' (see § 231.1(i)(4)).

(g) *Safety railings*—(1) *Number.* One.

(2) *Dimensions.* Minimum diameter, seven-eighths of an inch, wrought iron or steel. Minimum clearance, 2½ inches.

(3) *Location.* Safety railings shall be continuous around sides and ends of car, not less than 30 nor more than 60 inches above running board.

(4) *Manner of application.* Safety railings shall be securely fastened to tank or tank bands, and secured against end shifting.

(h) *Uncoupling levers*—(1) *Number.* Same as specified for ''Box and other house cars'' (see § 231.1(k)(1)).

(2) *Dimensions.* Same as specified for ''Box and other house cars'' (see § 231.1(k)(2)), except that minimum length of uncoupling lever shall be 42 inches, measured from center line of end of car to handle of lever.

(3) *Location.* Same as specified for ''Box and other house cars'' (see § 231.1(k)(3)), except that uncoupling lever shall be not more than 30 inches above center line of coupler.

(i) *End-ladder clearance.* (1) No part of car above buffer block within 30 inches from side of car, except brake shaft, brake-shaft brackets, brake wheel or uncoupling lever shall extend to within 12 inches of a vertical plane parallel with end of car and passing through the inside face of knuckle when closed with coupler horn against the buffer block or back stop, and no other part of end of car or fixtures on same, above buffer block, other than exceptions herein noted, shall extend beyond the face of buffer block.

(2) Carriers are not required to make changes to secure additional end-ladder clearance on cars in service July 1, 1911, that have 10 or more inches end-ladder clearance, within 30 inches of side of car, until car is shopped for work amounting to practically rebuilding body of car, at which time they must be made to comply with the standards prescribed.

§ 231.10 Caboose cars with platforms.

NOTE: a. The term ''bottom of car'' as used in § 231.10 is construed to mean ''bottom of side-sill or sheathing over side-sill.''

b. The term ''corner of car'' as used in § 231.10 is construed to mean the ''line at inner edge of platform formed by the intersection of the side and end of car.''

(a) *Hand brakes*—(1) *Number.* (i) Each caboose car shall be equipped with an efficient hand brake which shall operate in harmony with the power brake thereon.

(ii) The hand brake may be of any efficient design, but must provide the same degree of safety as the design shown on plate A.

(2) *Dimensions.* Same as specified for ''Box and other house cars'' (see § 231.1(a)(2)).

(3) *Location.* (i) Each hand brake shall be so located that it can be safely operated while car is in motion.

(ii) The brake shaft on caboose cars with platforms shall be located on platform to the left of center.

(iii) Carriers are not required to change the brakes from right to left side on steel or steel-underframe cars with platform end sills, in service July 1, 1911, except when such appliances are renewed, at which time they must be made to comply with the standards prescribed.

(4) *Manner of application.* Same as specified for ''Box and other house cars'' (see § 231.1(a)(4)).

(b) *Running boards*—(1) *Number.* One longitudinal running board.

(2) *Dimensions.* Same as specified for ''Box and other house cars'' (see § 231.1(c)(2)).

(3) *Location.* (i) Full length of car, center of roof. (On caboose cars with cupolas, longitudinal running boards shall extend from cupola to ends of roof.)

(ii) Outside - metal - roof - cars shall have latitudinal extensions leading to ladder locations.

(4) *Manner of application.* Same as specified for ''Box and other house cars'' (see § 231.1(c)(4)). See note below.

(c) *Ladders*—(1) *Number.* Two.

(2) *Dimensions.* None specified.

(3) *Location.* One on each end.

(4) *Manner of application.* Same as (see § 231.1(e)(4)). See note below.

(d) *Roof handholds*—(1) *Number.* One over each ladder. Where stiles of ladders extend 12 inches or more above roof, no other roof handholds are required.

(2) *Dimensions.* Same as specified for ''Box and other house cars'' (see § 231.1(g)(2)).

(3) *Location.* (i) On roof of caboose in line with and running parallel to treads of ladder, not less than 8 nor more than 15 inches from edge of roof.

(ii) Carriers are not required to change the location of handholds on cars in service July 1, 1911, except end handholds under end sills, where the appliances are within 3 inches of the required location, except that when cars undergo regular repairs they must then be made to comply with the standards prescribed.

(4) *Manner of application.* Same as specified for ''Box and other house cars'' (see § 231.1(g)(4)). See note below.

(e) *Cupola handholds*—(1) *Number.* One or more.

(2) *Dimensions.* Minimum diameter, five-eighths of an inch, wrought iron or steel. Minimum clearance, 2, preferably 2½ inches.

(3) *Location.* (i) One continuous handhold extending around top of cupola not more than 3 inches from edge of cupola roof.

(ii) Four right-angle handholds, one at each corner, not less than 16 inches in clear length from point of angle, may take the place of the one continuous handhold specified, if locations coincide.

(iii) Carriers are not required to change the location of handholds on cars in service July 1, 1911, except end handholds under end sills, where the appliances are within 3 inches of the required location, except that when cars undergo regular repairs they must then be made to comply with the standards prescribed.

(4) *Manner of application.* Cupola handholds shall be securely fastened with not less than ½-inch bolts with nuts outside and riveted over or with not less than ½-inch rivets. See note below.

(f) *Side handholds*—(1) *Number.* Four.

(2) *Dimensions.* Minimum diameter, five-eighths of an inch, wrought iron or steel. Minimum clear length, 36 inches. Minimum clearance, 2, preferably 2½, inches.

(3) *Location.* (i) One near each end on each side of car, curving downward toward center of car from a point not less than 30 inches above platform to a point not more than 8 inches from bottom of car. Top end of handhold shall be not more than 8 inches from outside face of end sheathing.

(ii) Carriers are not required to change the location of handholds on cars in service July 1, 1911, except end handholds under end sills, where the

appliances are within 3 inches of the required location, except that when cars undergo regular repairs they must then be made to comply with the standards prescribed.

(4) *Manner of application.* Same as specified for ''Box and other house cars'' (see § 231.1(h)(4)).

(g) *End handholds*—(1) *Number.* Four.

(2) *Dimensions.* Same as specified for ''Box and other house cars'' (see § 231.1(i)(2)).

(3) *Location.* (i) Horizontal, one near each side on each end of car on face of platform end sill. Clearance of outer end of handhold shall be not more than 16 inches from end of platform end sill.

(ii) Carriers are not required to change the location of handholds on cars in service July 1, 1911, except end handholds under end sills, where the appliances are within 3 inches of the required location, except that when cars undergo regular repairs they must then be made to comply with the standards prescribed.

(4) *Manner of application.* Same as specified for ''Box and other house cars'' (see § 231.1(i)(4)).

(h) *End-platform handholds*—(1) *Number.* Four.

(2) *Dimensions.* Minimum diameter, five-eighths of an inch, wrought iron or steel. Minimum clearance, 2, preferably 2½ inches.

(3) *Location.* (i) One right-angle handhold on each side of each end extending horizontally from door post to corner of car at approximate height of platform rail, then downward to within 12 inches of bottom of car.

(ii) Carriers are not required to change the location of handholds on cars in service July 1, 1911, except end handholds under end sills, where the appliances are within 3 inches of the required location, except that when cars undergo regular repairs they must then be made to comply with the standards prescribed.

(4) *Manner of application.* Handholds shall be securely fastened with bolts, screws, or rivets.

(i) *Caboose-platform steps.* Safe and suitable box steps leading to caboose platforms shall be provided at each corner of caboose. Lower tread of step shall be not more than 24 inches above top of rail.

(j) *Uncoupling levers.* Same as specified for ''Box and other house cars'' (see § 231.1(k)).

NOTE: Running boards may be omitted from Caboose Cars with platforms built after June 1, 1970, when each of the following conditions have been met:

(1) That ladders, roof handholds (including ladder extensions) and cupola handholds as specified in paragraphs (c), (d), and (e) of this § 231.10 are also omitted.

(2) That an appropriate notice be posted in protective manner or stenciled on interior of caboose stating ''operating employees are prohibited under all conditions from occupying the roof of this caboose.''

(3) That a safe means must be provided to assure the safety of an operating employee when required to clean or maintain windows of a caboose without running boards.

(4) That the following additional safety appliances as specified be securely installed at the outer edge of each platform:

(a) Safety railing

(i) Number:

Horizontal—Four (4), two (2) upper and two (2) lower.

Vertical—Four (4).

(ii) Dimensions:

Minimum diameter—One (1) inch wrought iron, steel, or other material of equivalent strength.

Minimum clearance—Four (4), preferably six (6) inches except at brace and fastening locations.

(iii) Location:

Vertical—One (1) at each corner of car extending from platform end sill to level of lower horizontal safety railing or to suitable bracket at roof.

Horizontal—Upper: Across each end of car near outer edge securely braced with vertical supports not less than 48 nor more than 54 inches above top of platform extending not less than full width of platform excluding hand brake stanchion area.

Horizontal—Lower: Across each end of car near outer edge securely braced with vertical supports not less than 36 nor more than 42 inches above top of platform excluding hand brake stanchion area. An opening may be provided near center. Such opening shall be provided with a secure safety chain(s) not less than ¼-inch diameter wrought iron, or steel, or other secure suitable closure.

(iv) Manner of application:

Safety railing shall be securely fastened with ½-inch bolts or rivets when possible and securely supported. A weld at connection of vertical and horizontal safety railing and vertical supports is permissible when those appliances are fabricated as a single unit.

(b) Kick plates

(i) Number: Four (4).

(ii) Dimensions:
Minimum thickness 10-gauge wrought iron, steel or other material of equivalent strength.
Width—Minimum 24 inches.
Height—Minimum 24 inches.

(iii) Location: One near each side on each and. Outer edge not more than 12 inches from adjacent vertical safety railing with bottom edge near top of platform. Hand brake stand may serve as part of kick plate.

(iv) Manner of application: Securely fastened by ½-inch bolts or rivets, or weld.

(v) Vertical hand rail supports spaced not more than eighteen (18) inches apart may be used in lieu of kick plates.

(5) That stove pipe shall be secured to prevent turning.

(6) That windows shall be laminated safety-type glass or equivalent.

Existing caboose cars with platforms. Running boards may be removed from Caboose Cars with Platforms built or under construction on or before June 1, 1970, when each of the following conditions have been met:

(1) That ladder treads above safety railing, roof handholds including ladder extensions, and cupola handholds specified in paragraphs (c), (d), and (e) of this §231.10 are removed.

(2) That an appropriate notice be posted in protective manner or stenciled in interior of caboose stating ''operating employees are prohibited under all conditions from occupying the roof of this caboose.''

(3) That a safe means must be provided to assure the safety of an operating employee when required to clean or maintain windows of a caboose without running boards.

(4) That end platform safety railing and handhold arrangement will be deemed to meet requirements except as to upper safety railing and kick plates, when those appliances are not provided. When vertical supports are not more than twenty-four (24) inches apart, such supports may be used in lieu of kick plates.

(5) That the following additional safety appliances (when not so provided) shall be securely installed at outer edge of each platform:

(a) Safety railing.

(i) Number:
Horizontal upper—Two (2).

(ii) Dimensions:
Minimum diameter—One (1) inch wrought iron, steel, or other material of equivalent strength.
Minimum clearance—Four (4), preferably six (6) inches except at brace and fastening locations.

(iii) Location:
Horizontal—Upper: Across each end of car near outer edge securely braced with vertical supports not less than 48 nor more than 54 inches above top of platform extending not less than full width of platform excluding hand brake stanchion area. Ladder tread not more than two (2) inches below level of upper safety railing may serve as a portion of said safety railing.

(b) Kick plates or vertical supports—Same as provided for caboose cars with platforms built after June 1, 1970, this note. See above.

(6) That stove pipe should be secured to prevent turning.

(7) Cupola or bay windows shall be laminated safety-type glass or equivalent and all other caboose windows shall be so provided on or before June 1, 1975.

[33 FR 19663, Dec. 25, 1968, as amended at 35 FR 10149, June 20, 1970]

§231.11 Caboose cars without platforms.

(a) *Hand brakes*—(1) *Number.* Same as specified for ''Box and other house cars'' (see §231.1(a)(1)).

(2) *Dimensions.* Same as specified for ''Box and other house cars'' (see §231.1(a)(2)).

(3) *Location.* (i) Each hand brake shall be so located that it can be safely operated while car is in motion.

(ii) The brake shaft on caboose cars without platforms shall be located on end of car to the left of center.

(iii) Carriers are not required to change the brakes from right to left side on steel or steel-underframe cars with platform end sills, in service July 1, 1911, except when such appliances are renewed, at which time they must be made to comply with the standards prescribed.

(4) *Manner of application.* Same as specified for ''Box and other house cars'' (see §231.1(a)(4)).

(b) *Brake step.* Same as specified for ''Box and other house cars'' (see §231.1(b)).

(c) *Running boards*—(1) *Number.* Same as specified for ''Box and other house cars'' (see §231.1(c)(1)).

(2) *Dimension.* Same as specified for ''Box and other house cars'' (see §231.1(c)(2)).

(3) *Location.* (i) Full length of car, center of roof. (On caboose cars with cupolas, longitudinal running boards shall extend from cupola to ends of roof.)

(ii) Outside-metal-roof cars shall have latitudinal extensions leading to ladder locations.

(4) *Manner of application.* Same as specified for ''Box and other house cars'' (see §231.1(c)(4)).

(d) *Sill steps.* Same as specified for ''Box and other house cars'' (see § 231.1(d)).

(e) *Side-door steps*—(1) *Number.* Two. (If caboose has side doors.)

(2) *Dimensions.* Minimum length, 5 feet. Minimum width, 6 inches. Minimum thickness of tread, 1½ inches. Minimum height of back stop, 3 inches. Maximum height from top of rail to top of tread, 24 inches.

(3) *Location.* One under each side door.

(4) *Manner of application.* Side-door steps shall be supported by 2 iron brackets having a minimum cross-sectional area ⅞ by 3 inches or equivalent, each of which shall be securely fastened to car by not less than two ¾-inch bolts.

(f) *Ladders*—(1) *Number.* Four.

(2) *Dimensions.* Same as specified for ''Box and other house cars'' (see § 231.1(e)(2)).

(3) *Location.* Same as specified for ''Box and other house cars'' (see § 231.1(e)(3), except when caboose has side doors, then side ladders shall be located not more than 8 inches from doors.

(4) *Manner of application.* Same as specified for ''Box and other house cars'' (see § 231.1(e)(4)).

(g) *End-ladder clearance.* (1) No part of car above end sills within 30 inches from side of car, except buffer block, brake shaft, brake wheel, brake step, running board, or uncoupling lever shall extend to within 12 inches of a vertical plane, parallel with end of car and passing through the inside face of knuckle when closed with coupler horn against the buffer block or end sill, and no other part of end of car or fixtures on same above end sills, other than exceptions noted in this subparagraph, shall extend beyond the outer face of buffer block.

(2) Carriers are not required to make changes to secure additional end-ladder clearance on cars in service July 1, 1911, that have 10 or more inches end-ladder clearance, within 30 inches of side of car, until car is shopped for work amounting to practically rebuilding body of car, at which time they must be made to comply with the standards prescribed.

(h) *Roof handholds*—(1) *Number.* Four.

(2) *Dimensions.* Same as specified for ''Box and other house cars'' (see § 231.1(g)(2)).

(3) *Location.* (i) One over each ladder, on roof in line with and running parallel to treads of ladder, not less than 8 nor more than 15 inches from edge of roof.

(ii) Where stiles of ladders extend 12 inches or more above roof, no other roof handholds are required.

(iii) Carriers are not required to change the location of handholds on cars in service July 1, 1911, except end handholds under end sills, where the appliances are within 3 inches of the required location, except that when cars undergo regular repairs they must then be made to comply with the standards prescribed.

(4) *Manner of application.* Roof handholds shall be securely fastened with not less than ½-inch bolts with nuts outside (when possible) and riveted over, or with not less than ½-inch rivets.

(i) *Cupola handholds*—(1) *Number.* One or more.

(2) *Dimensions.* Minimum diameter, five-eights of an inch, wrought iron or steel. Minimum clearance, 2, preferably 2½ inches.

(3) *Location.* (i) One continuous cupola handhold extending around top of cupola, not more than 3 inches from edge of cupola roof.

(ii) Four right-angle handholds, one at each corner, not less than 16 inches in clear length from point of angle, may take the place of the one continuous handhold specified, if locations coincide.

(iii) Carriers are not required to change the location of handholds on cars in service July 1, 1911, except end handholds under end sills, where the appliances are within 3 inches of the required location, except that when cars undergo regular repairs they must then be made to comply with the standards prescribed.

(4) *Manner of application.* Cupola handholds shall be securely fastened with not less than ½-inch bolts with nuts outside and riveted over or with not less than ½-inch rivets.

(j) *Side handholds*—(1) *Number.* Four.

(2) *Dimensions.* Same as specified for ''Box and other house cars'' (see § 231.1(h)(2)).

(3) *Location.* (i) Horizontal, one near each end on each side of car, not less than 24 nor more than 30 inches above center line of coupler. Clearance of outer end of handhold shall be not more than 8 inches from end of car.

(ii) Carriers are not required to change the location of handholds on cars in service July 1, 1911, except end handholds under end sills where the appliances are within 3 inches of the required location, except that when cars undergo regular repairs they must then be made to comply with the standards prescribed.

(4) *Manner of application.* Same as specified for ''Box and other house cars'' (see § 231.(h)(4)).

(k) *Side-door handholds*—(1) *Number.* Four: Two curved, two straight.

(2) *Dimensions.* Minimum diameter, five-eighths of an inch, wrought iron or steel. Minimum clearance, 2, preferably 2½ inches.

(3) *Location.* (i) One curved handhold, from a point at side of each door opposite ladder, not less than 36 inches above bottom of car, curving away from door downward to a point not more than 6 inches above bottom of car.

(ii) One vertical handhold at ladder side of each door from a point not less than 36 inches above bottom of car to a point not more than 6 inches above level of bottom of door.

(iii) Carriers are not required to change the location of handholds on cars in service July 1, 1911, except end handholds under end sills, where the appliances are within 3 inches of the required location, except that when cars undergo regular repairs they must then be made to comply with the standards prescribed.

(4) *Manner of application.* Side-door handholds shall be securely fastened with not less than ½-inch bolts with nuts outside (when possible) and riveted over or with not less than ½-inch rivets.

(l) *Horizontal end handholds*—(1) *Number.* Same as specified for ''Box and other house cars.'' (See § 231.1(i)(1)).

(2) *Dimensions.* Same as specified for ''Box and other house cars.'' (see § 231.1(i)(2)).

(3) *Location.* (i) Same as specified for ''Box and other house cars'' (see § 231.1(i)(3)), except that one additional end handhold shall be on each end of cars with platform end sills as heretofore described, unless car has door in center of end. Said handhold shall be not less than 24 inches in length, located near center of car, not less than 30 nor more than 60 inches above platform end sill.

(ii) Carriers are not required to change the location of handholds on cars in service July 1, 1911, except end handholds under end sills, where the appliances are within 3 inches of the required location, except that when cars undergo regular repairs they must then be made to comply with the standards prescribed in said order.

(4) *Manner of application.* Same as specified for ''Box and other house cars'' (see § 231.1(i)(4)).

(m) *Vertical end handholds.* Same as specified for ''Box and other house cars'' (see § 231.1(j)).

(n) *Uncoupling levers.* Same as specified for ''Box and other house cars'' (see § 231.1(k)).

§ 231.12 Passenger-train cars with wide vestibules.

(a) *Hand brakes*—(1) *Number.* Each passenger-train car shall be equipped with an efficient hand brake, which shall operate in harmony with the power brake thereon.

(2) *Location.* Each hand brake shall be so located that it can be safely operated while car is in motion.

(b) *Side handholds*—(1) *Number.* Eight.

(2) *Dimensions.* Minimum diameter, five-eighths of an inch, metal. Minimum clear length, 16 inches. Minimum clearance, 1¼, preferably 1½ inches.

(3) *Location.* Vertical, one on each vestibule door post.

(4) *Manner of application.* Side handholds shall be securely fastened with bolts, rivets, or screws.

(c) *End handholds*—(1) *Number.* Four.

(2) *Dimensions.* (i) Minimum diameters, five-eighths of an inch, wrought iron or steel. Minimum clear length, 16 inches. Minimum clearance, 2, preferably 2½ inches.

(ii) Handholds shall be flush with or project not more than 1 inch beyond vestibule face.

(3) *Location.* Horizontal, one near each side on each end projecting downward from face of vestibule end sill. Clearance of outer end of handhold shall be not more than 16 inches from side of car.

(4) *Manner of application.* End handholds shall be securely fastened with bolts or rivets. When marker sockets or brackets are located so that they can not be conveniently reached from platforms, suitable steps and handholds shall be provided for men to reach such sockets or brackets.

(d) *Uncoupling levers.* (1) Uncoupling attachments shall be applied so they can be operated by a person standing on the ground.

(2) Minimum length of ground uncoupling attachment, 42 inches, measured from center line of end of car to handle of attachment.

(3) On passenger-train cars used in freight or mixed-train service, the uncoupling attachment shall be so applied that the coupler can be operated from left side of car.

§ 231.13 Passenger-train cars with open-end platforms.

(a) *Hand brakes*—(1) *Number.* Each passenger-train car shall be equipped with an efficient hand brake, which shall operate in harmony with the power brake thereon.

(2) *Location.* Each hand brake shall be so located that it can be safely operated while car is in motion.

(b) *End handholds*—(1) *Number.* Four.

(2) *Dimensions.* Minimum diameter, five-eighths of an inch, wrought iron or steel. Minimum clear length, 16 inches. Minimum clearance, 2, preferably 2½ inches. Handholds shall be flush with or project not more than 1 inch beyond surface of end sill.

(3) *Location.* Horizontal, one near each side of each end on face of platform end sill, projecting downward. Clearance of outer end of handhold shall be not more than 16 inches from end of end sill.

(4) *Manner of application.* End-handholds shall be securely fastened with bolts or rivets.

(c) *End-platform handholds*—(1) *Number.* Four. (Cars equipped with safety gates do not require end-platform handholds.)

(2) *Dimensions.* Minimum clearance, 2, preferably 2½ inches, metal.

(3) *Location.* Horizontal from or near door post to a point not more than 12 inches from corner of car, then approximately vertical to a point not more than 6 inches from top of platform. Horizontal portion shall be not less than 24 inches in length nor more than 40 inches above platform.

(4) *Manner of application.* End-platform handholds shall be securely fastened with bolts, rivets, or screws.

(d) *Uncoupling levers.* (1) Uncoupling attachments shall be applied so they can be operated by a person standing on the ground.

(2) Minimum length of ground uncoupling attachment, 42 inches, measured from center of end of car to handle of attachment.

(3) On passenger-train cars used in freight or mixed-train service the uncoupling attachments shall be so applied that the coupler can be operated from left side of car.

§ 231.14 Passenger-train cars without end platforms.

(a) *Handbrakes*—(1) *Number.* Each passenger-train car shall be equipped with an efficient hand brake which shall operate in harmony with the power brake thereon.

(2) *Location.* Each hand brake shall be so located that it can be safely operated while car is in motion.

(b) *Sill steps*—(1) *Number.* Four.

(2) *Dimensions.* Minimum length of tread, 10, preferably 12, inches. Minimum cross-sectional area, ½ by 1½ inches or equivalent, wrought iron or steel. Minimum clear depth, 8 inches.

(3) *Location.* (i) One near each end on each side not more than 24 inches from corner of car to center of tread of sill step.

(ii) Outside edge of tread of step shall be not more than 2 inches inside of face of side of car.

(iii) Tread shall be not more than 24, preferably not more than 22, inches above the top of rail.

(4) *Manner of application.* (i) Steps exceeding 18 inches in depth shall have an

additional tread and be laterally braced.

(ii) Sill steps shall be securely fastened with not less than ½-inch bolts with nuts outside (when possible) and riveted over, or with not less than ½-inch rivets.

(c) *Side handholds*—(1) *Number.* Four.

(2) *Dimensions.* Minimum diameter, five-eighths of an inch, wrought iron or steel. Minimum clear length, 16, preferably 24, inches. Minimum clearance, 2, preferably 2½, inches.

(3) *Location.* Horizontal or vertical, one near each end on each side of car over sill step.

(i) If horizontal, not less than 24 nor more than 30 inches above center line of coupler.

(ii) If vertical, lower end not less than 18 nor more than 24 inches above center line of coupler.

(4) *Manner of application.* Side handholds shall be securely fastened with bolts, rivets or screws.

(d) *End handholds*—(1) *Number.* Four.

(2) *Dimensions.* Minimum diameter, five-eighths of an inch, wrought iron or steel. Minimum clear length, 16 inches. Minimum clearance, 2, preferably 2½, inches.

(3) *Location.* Horizontal, one near each side on each end projecting downward from face of end sill or sheathing. Clearance of outer end of handholds shall be not more than 16 inches from side of car.

(4) *Manner of application.* (i) Handholds shall be flush with or project not more than 1 inch beyond face of end sill.

(ii) End handholds shall be securely fastened with bolts or rivets.

(iii) When marker sockets or brackets are located so that they can not be conveniently reached from platforms, suitable steps and handholds shall be provided for men to reach such sockets or brackets.

(e) *End handrails.* (On cars with projecting end sills.)

(1) *Number.* Four.

(2) *Dimensions.* Minimum diameter, five-eighths of an inch, wrought iron or steel. Minimum clearance, 2, preferably 2½, inches.

(3) *Location.* One on each side of each end, extending horizontally from doorpost or vestibule frame to a point not more than 6 inches from corner of car, then approximately vertical to a point not more than 6 inches from top of platform end sill; horizontal portion shall be not less than 30 nor more than 60 inches above platform end sill.

(4) *Manner of application.* End handrails shall be securely fastened with bolts, rivets or screws.

(f) *Side-door steps*—(1) *Number.* One under each door.

(2) *Dimensions.* Minimum length of tread, 10, preferably 12, inches. Minimum cross-sectional area, ½ by 1½ inches or equivalent, wrought iron or steel. Minimum clear depth, 8 inches.

(3) *Location.* Outside edge of tread of step not more than 2 inches inside of face of side of car. Tread not more than 24, preferably not more than 22, inches above the top of rail.

(4) *Manner of application.* (i) Steps exceeding 18 inches in depth shall have an additional tread and be laterally braced.

(ii) Side-door steps shall be securely fastened with not less than ½-inch bolts with nuts outside (when possible) and riveted over, or with not less than ½-inch rivets.

(iii) A vertical handhold not less than 24 inches in clear length shall be applied above each side-door step on door post.

(g) *Uncoupling levers.* (1) Uncoupling attachments shall be applied so they can be operated by a person standing on the ground.

(2) Minimum length of ground uncoupling attachment, 42 inches, measured from center line of end of car to handle of attachment.

(3) On passenger-train cars used in freight or mixed-train service, the uncoupling attachment shall be so applied that the coupler can be operated from the left side of car.

§ 231.15 Steam locomotives used in road service.

(a) *Tender till-steps*—(1) *Number.* Four on tender.

(2) *Dimensions.* (i) Bottom tread not less than 8 by 12 inches, metal. (May have wooden treads.)

(ii) If stirrup steps are used, clear length of tread shall be not less than 10, preferably 12, inches.

(3) *Location.* One near each corner of tender on sides.

(4) *Manner of application.* Tender sill-steps shall be securely fastened with bolts or rivets.

(b) *Pilot sill-steps*—(1) *Number.* Two.

(2) *Dimensions.* Tread not less than 8 inches in width by 10 inches in length, metal. (May have wooden treads.)

(3) *Location.* One on or near each end of buffer-beam outside of rail and not more than 16 inches above rail.

(4) *Manner of application.* Pilot sill-steps shall be securely fastened with bolts or rivets.

(c) *Pilot-beam handholds*—(1) *Number.* Two.

(2) *Dimensions.* Minimum diameter, five-eighths of an inch, wrought iron or steel. Minimum clear length, 14, preferably 16, inches. Minimum clearance, 2½ inches.

(3) *Location.* One on each end of buffer-beam. If uncoupling lever extends across front end of locomotive to within 8 inches of end of buffer-beam, and is seven-eighths of an inch or more in diameter, securely fastened, with a clearance of 2½ inches, it is a handhold.)

(4) *Manner of application.* Pilot-beam handholds shall be securely fastened with bolts or rivets.

(d) *Side handholds*—(1) *Number.* Six.

(2) *Dimensions.* Minimum diameter, if horizontal, five-eighths of an inch; if vertical, seven-eighths of an inch, wrought iron or steel. Horizontal, minimum clear length, 16 inches. Vertical, clear length equal to approximate height of tank. Minimum clearance, 2, preferably 2½, inches.

(3) *Location.* (i) Horizontal or vertical. If vertical, one on each side of tender within 6 inches of rear or on corner; if horizontal, same as specified for ''Box and other house cars'' (see § 231.1(h)(3)).

(ii) One on each side of tender near gangway; 1 on each side of locomotive at gangway; applied vertically.

(4) *Manner of application.* Side handholds shall be securely fastened with not less than ½-inch bolts or rivets.

(e) *Rear-end handholds*—(1) *Number.* Two.

(2) *Dimensions.* Minimum diameter, five-eighths of an inch, wrought iron or steel. Minimum clear length, 14 inches. Minimum clearance, 2, preferably 2½, inches.

(3) *Location.* Horizontal, one near each side of rear end of tender on face of end sill. Clearance of outer end of handhold shall be not more than 16 inches from side of tender.

(4) *Manner of application.* Rear-end handholds shall be securely fastened with not less than ½-inch bolts or rivets.

(f) *Uncoupling levers*—(1) *Number.* Two double levers, operative from either side.

(2) *Dimensions.* Rear-end levers shall extend across end of tender with handles not more than 12, preferably 9, inches from side of tender with a guard bent on handle to give not less than 2 inches clearance around handle.

(3) *Location.* One on rear end of tender and one on front end of locomotive. Handles of front-end leavers shall be not more than 12, preferably 9, inches from ends of buffer-beam, and shall be so constructed as to give a minimum clearance of 2 inches around handle.

(4) *Manner of application.* Uncoupling levers shall be securely fastened with bolts or rivets.

(g) *Couplers.* Locomotives shall be equipped with automatic couplers at rear of tender and front of locomotive.

§ 231.16 Steam locomotives used in switching service.

(a) *Footboards*—(1) *Number.* Two or more.

(2) *Dimensions.* (i) Minimum width of tread, 10 inches.

(ii) Minimum height of back stop, 4 inches above tread.

(iii) Height from top of rail to top of tread, not more than 12 nor less than 9 inches.

(iv) If made of wood, minimum thickness of tread shall be 1½, preferably 2 inches.

(v) Footboards may be made of material other than wood which provides the same as or a greater degree of safety than wood of 1½ inches thickness. When made of material other than wood, the tread surface shall be of anti-skid design and constructed with sufficient open space to permit the elimination of snow and ice from the tread surface.

(3) *Location.* Ends or sides. If on ends, they shall extend not less than 18 inches outside of guage of straight track, and shall be not more than 12 inches shorter than buffer-beam at each end.

(4) *Manner of application.* (i) End footboards may be constructed in two sections, provided that practically all space on each side of coupler is filled; each section shall be not less than 3 feet in length.

(ii) Footboards shall be securely bolted to two 1- by 4-inch metal brackets, provided footboard is not cut or notched at any point.

(iii) If footboard is cut or notched or in two sections, not less than four 1- by 3-inch metal brackets shall be used, two located on each side of coupler. Each bracket shall be securely bolted to buffer-beam, end sill or tank frame by not less than two ⅞-inch bolts.

(iv) If side footboards are used, a substantial handhold or rail shall be applied not less than 30 inches nor more than 60 inches above tread or footboard.

(b) *Sill steps*—(1) *Number.* Two or more.

(2) *Dimensions.* (i) Lower tread of step shall be not less than 8 by 12 inches, metal. (May have wooden treads.)

(ii) If stirrup steps are used, clear length of tread shall be not less than 10, preferably 12, inches.

(3) *Location.* One or more on each side at gangway secured to locomotive or tender.

(4) *Manner of application.* Sill steps shall be securely fastened with bolts or rivets.

(c) *End handholds*—(1) *Number.* Two.

(2) *Dimensions.* Minimum diameter, 1 inch, wrought iron or steel. Minimum clearance, 4 inches, except at coupler casting or braces when minimum clearance shall be 2 inches.

(3) *Location.* One on pilot, buffer-beam; one on rear end of tender, extending across front end of locomotive and rear end of tender. Ends of handholds shall be not more than 6 inches from ends of buffer-beam or end sill, securely fastened at ends.

(4) *Manner of application.* End handholds shall be securely fastened with bolts or rivets.

(d) *Side handholds*—(1) *Number.* Four.

(2) *Dimensions.* Minimum diameter, seven-eighths of an inch, wrought iron or steel. Clear length equal to approximate height of tank. Minimum clearance, 2, preferably 2½ inches.

(3) *Location.* Vertical. One on each side of tender near front corner; one on each side of locomotive at gangway.

(4) *Manner of application.* Side handholds shall be securely fastened with bolts or rivets.

(e) *Uncoupling levers*—(1) *Number.* Two double levers, operative from either side.

(2) *Dimensions.* (i) Handles of front-end levers shall be not more than 12, preferably 9, inches from ends of buffer-beam, and shall be so constructed as to give a minimum clearance of 2 inches around handle.

(ii) Rear-end levers shall extend across end of tender with handles not more than 12, preferably 9, inches from side of tender, with a guard bent on handle to give not less than 2 inches clearance around handle.

(3) *Location.* One on rear end of tender and one on front end of locomotive.

(f) *Handrails and steps for headlights.* Switching locomotives with sloping tenders with manhole or headlight located on sloping portion of tender shall be equipped with secure steps and handrail or with platform and handrail leading to such manhole or headlight.

(g) *End-ladder clearance.* No part of locomotive or tender except draft rigging, coupler and attachments, safety chains, buffer block, footboard, brake pipe, signal pipe, steam-heat pipe or arms of uncoupling lever shall extend to within 14 inches of a vertical plane passing through the inside face of knuckle when closed with horn of coupler against buffer block or end sill.

(h) *Couplers.* Locomotives shall be equipped with automatic couplers at rear of tender and front of locomotive.

§ 231.17 Specifications common to all steam locomotives.

(a) *Hand brakes.* (1) Hand brakes will not be required on locomotives nor on tenders when attached to locomotives.

(2) If tenders are detached from locomotives and used in special service, they shall be equipped with efficient hand brakes.

(b) *Running boards*—(1) *Number.* Two.

(2) *Dimensions.* Not less than 10 inches wide. If of wood, not less than 1½ inches in thickness; if of metal, not less than three-sixteenths of an inch, properly supported.

(3) *Location.* One on each side of boiler extending from cab to front end near pilot-beam. (Running boards may be in sections. Flat-top steamchests may form section of running board.)

(4) *Manner of application.* (i) Running boards shall be securely fastened with bolts, rivets, or studs.

(ii) Locomotives having Wootten type boilers with cab located on top of boiler more than 12 inches forward from boiler head shall have suitable running boards running from cab to rear of locomotive, with handrailings not less than 20 nor more than 48 inches above outside edge of running boards, securely fastened with bolts, rivets, or studs.

(c) *Handrails*—(1) *Number.* Two or more.

(2) *Dimensions.* Not less than 1 inch in diameter, wrought iron or steel.

(3) *Location.* One on each side of boiler extending from near cab to near front end of boiler, and extending across front end of boiler, not less than 24 nor more than 66 inches above running board.

(4) *Manner of application.* Handrails shall be securely fastened to boiler.

(d) *Tenders of Vanderbilt type.* (1) Tenders known as the Vanderbilt type shall be equipped with running boards; one on each side of tender not less than 10 inches in width and one on top of tender not less than 48 inches in width, extending from coal space to rear of tender.

(2) There shall be a handrail on each side of top running board, extending from coal space to rear of tank, not less than 1 inch in diameter and not less than 20 inches in height above running board from coal space to manhole.

(3) There shall be a handrail extending from coal space to within 12 inches of rear of tank, attached to each side of tank above side running board not less than 30 nor more than 66 inches above running board.

(4) There shall be one vertical end handhold on each side of Vanderbilt type of tender, located within 8 inches of rear of tank extending from within 8 inches of top of end sill to within 8 inches of side handrail. Post supporting rear end of side running board, if not more than 2 inches in diameter and properly located, may form section of handhold.

(5) An additional horizontal end handhold shall be applied on rear end of all Vanderbilt type of tenders which are not equipped with vestibules. Handhold to be located not less than 30 nor more than 66 inches above top of end sill. Clear length of handhold to be not less than 48 inches.

(6) Ladders shall be applied at forward ends of side running boards.

(e) *Handrails and steps for headlights.* (1) Locomotives having headlights which can not be safely and conveniently reached from pilot-beam or steam chests shall be equipped with secure handrails and steps suitable for the use of men in getting to and from such headlights.

(2) A suitable metal end or side ladder shall be applied to all tanks more than 48 inches in height, measured from the top of end sill, and securely fastened with bolts or rivets.

(f) *Couplers.* Locomotives shall be equipped with automatic couplers at rear of tender and front of locomotive.

§ 231.18 Cars of special construction.

Cars of construction not covered specifically in the foregoing sections in this part, relative to handholds, sill steps, ladders, hand brakes and running boards may be considered as of special construction, but shall have, as nearly as possible, the same complement of handholds, sill steps, ladders, hand brakes, and running boards as are required for cars of the nearest approximate type.

§ 231.19 Definition of "Right" and "Left."

Right or *Left* refers to side of person when facing end or side of car from ground.

§ 231.20 Variation in size permitted.

To provide for the usual inaccuracies of manufacturing and for wear, where sizes of metal are specified, a total variation of 5 percent below size given is permitted.

§231.21 Tank cars without underframes.

(a) *Hand brakes*—(1) *Number.* Same as specified for ''Box and other house cars'' (see §231.1(a)(1)).

(2) *Dimensions.* Same as specified for ''Box and other house cars'' (see §231.1(a)(2)).

(3) *Location.* Each hand brake shall be so located that it can be safely operated while car is in motion. The brake shaft shall be located on end of car to the left of center.

(4) *Manner of application.* Same as specified for ''Box and other house cars'' (see §231.1(a)(4)).

(b) *End platforms*—(1) *Number.* Two.

(2) *Dimensions.* Minimum width, ten inches. Minimum thickness, one and three-quarters inches.

(3) *Location.* One on each end extending across car a distance equal to or greater than any other portion of car. Outside edge of end platform shall extend not less than seven inches beyond bulge of tank head and safety railing.

(4) *Manner of application.* End platforms shall be securely fastened to the draft sills and be sufficiently rigid to prevent sagging.

(c) *Sill steps.* Same as specified for ''Box and other house cars'' (see §231.1(d)).

(d) *End platform safety railing*—(1) *Number.* Two.

(2) *Dimensions.* Minimum of seven-eighths inch diameter, wrought iron or steel, or one and one-quarter inch pipe. Minimum clearance, two and one-half inches.

(3) *Location.* One safety railing at each end of car shall extend horizontally across car not less than thirty-six inches nor more than fifty-four inches above end platform and extend downward within three inches of the end of the platform. The safety railing shall be located not more than six inches from the inside edge of the platform.

(4) *Manner of application.* Safety railings shall be supported at center of car and at each end by extending downward at the ends and attaching to the platform.

(e) *Side railing*—(1) *Number.* Two.

(2) *Dimensions.* One and one-quarter inch pipe. Minimum clearance two and one-half inches.

(3) *Location.* One on each side of car, extending from end platform to end platform at a distance of not less than 51 inches from centerline of car, except that where break in side railing is necessary for side ladder or operating cabinet, the side railing shall be securely attached to such ladder and/or cabinet.

(4) *Manner of application.* Safety railings shall be securely attached to end platforms and supported from the car at intervals not exceeding ten feet.

(f) *Side handholds*—(1) *Number.* Four.

(2) *Dimensions.* Same as specified for ''Box and other house cars'' (see §231.1(h)(2)).

(3) *Location.* Four horizontal; one on face of end platform end, over sill step, projecting downward or outward. Clearance of outer end of handhold shall be not more than twelve inches from end of car. Vertical portion of end platform safety railing shall be considered as a side vertical handhold.

(4) *Manner of application.* Same as prescribed for ''Box and other house cars'' (see §231.1(h)(4)).

(g) *End handholds*—(1) *Number.* Four.

(2) *Dimensions.* Same as specified for ''Box and other house cars'' (see §231.1(i)(2)).

(3) *Location.* Horizontal, one near each side of each end of car on face of end sill. Clearance of outer end of handhold shall not be more than sixteen inches from side of car.

(4) *Manner of application.* Same as specified for ''Box and other house cars'' (see §231.1(i)(4)).

(h) *Uncoupling levers.* Same as specified for ''Box and other house cars'' (see §231.1(k)).

(i) *End ladder clearance.* No part of car above end sills within thirty inches from side of car, except buffer block, brake shaft, brake-shaft brackets, brake wheel, running boards or uncoupling lever shall extend to within twelve inches of a vertical plane parallel with end of car and passing through the inside face of knuckle when closed with coupler horn against the buffer block or end sill, and no other part of end of car or fixtures on same, above end sills, other than exceptions herein noted, shall extend beyond the outer face of the buffer block.

(j) *Operating platform, ladder and safety railing*—(1) *Number.* One operating

platform, two ladders and safety railing. Not required if all fittings used in the loading or unloading of the tank car are accessible from ground or end platform.

(2) *Dimensions.* (i) Ladder: Ladder stiles, three-eighths by two inches or equivalent, wrought iron or steel. One and one-quarter inch extra strong pipe will be considered equivalent.

(ii) Ladder treads minimum diameter, five-eighths of an inch, wrought iron or steel.

(iii) Minimum clear length of treads, fourteen inches.

(iv) Maximum spacing of treads, nineteen inches.

(v) Minimum clearance of treads and ladder stiles, two inches, preferably two and one-half inches.

(vi) Operating platform, minimum width, seven inches; minimum thickness, one and three-quarters inches.

(vii) Safety railing, one and one-quarter inch wrought iron or steel pipe.

(3) *Location.* (i) Operating platform to be of sufficient length to provide access to all operating fittings. Ladder to be located on sides of car at center.

(ii) The safety railing shall enclose the operating platform, manway and fittings used in the loading and unloading of the tank. Railing shall be open only at the ladders where it shall extend in a vertical direction down to, and be securely attached to the platform. Maximum width of opening, twenty-four inches.

(4) *Manner of application.* (i) The ladders shall be securely fastened to the operating platform. The lower portion of ladder shall be braced in such a manner as to prevent any movement.

(ii) The operating platforms shall be supported to prevent sagging and be securely attached to the tank.

(iii) The safety railing shall be securely attached to four stanchions or corner posts, which shall be securely attached to the tank or operating platform.

(k) *Manner of application of safety appliances on tank cars covered with jackets.* On tanks covered with jackets, metal pads shall be securely attached to the shell proper, to which brackets shall be fastened for securing the safety appliances attached to the tanks; or, the safety appliances (with the exception of the operating platform brackets) may be secured to the jackets reinforced with metal pads at the point of attachment, which pads shall extend at least two inches from the center line of rivet holes. The operating platform brackets shall be secured to the jacket reinforced with suitable bands. When the safety appliances are attached to the jacket covering of the tank, the jacket shall be tightened so that there will be no danger of its slipping around.

[33 FR 19663, Dec. 25, 1968, as amended at 34 FR 11974, July 16, 1969]

§ 231.22 Operation of track motor cars.

On and after August 1, 1963, it shall be unlawful for any railroad subject to the requirements of the Safety Appliance Acts to operate or permit to be operated on its line track motor cars to pull or haul trailers, push trucks, hand cars, or similar cars or equipment.

EFFECTIVE DATE NOTE: At 28 FR 7839, Aug. 1, 1963, the effective date of § 231.22 was stayed until further notice.

§ 231.23 Unidirectional passenger-train cars adaptable to van-type semi-trailer use.

(a) *Hand brakes*—(1) *Number.* Same as specified for ''Passenger-Train Cars Without End-Platforms.''

(2) *Location.* Each hand brake shall be so located that it can be safely operated while car is in motion. The hand brake operating device shall be located on the end of car to the left of center.

(b) *Brake step*—(1) *Number.* One (1).

(2) *Dimensions.* Not less than twenty-eight (28) inches in length. Outside edge not less than eight (8) inches from face of car, except when ''A'' frame is used and extends beyond end of car, a platform of anti-skid design covering the extended portion of the ''A'' frame may be used as brake step.

(3) *Manner of application.* Brake step shall be securely fastened to car and when additional support is necessary, metal braces having a minimum cross-sectional area three-eighths (⅜) by one and one-half (1½) inches or equivalent shall be securely fastened to body of car with not less than one-half (½) inch bolts or rivets.

(c) *Sill steps*—(1) *Number.* Two (2).

(2) *Dimensions.* Minimum length of tread, ten (10) preferably twelve (12) inches. Minimum cross-sectional area, one-half (½) by one and one-half (1½) inches, or equivalent, wrought iron, steel or other metal of equivalent strength. Minimum clear depth, eight (8) inches.

(3) *Location.* One (1) near the rear or trailing end of the car on each side, not more than twenty-four (24) inches from corner of car to center of tread of sill step.

(4) *Manner of application.* Same as specified for ''Passenger-Train Cars Without End-Platforms.''

(d) *End-clearance.* No part of car above end sills except the brake step shall extend to within twenty (20) inches of a vertical plane parallel with end of car and passing through the outside edge of any part of an adjoining car.

(e) *Side handholds*—(1) *Number.* Four (4).

(2) *Dimensions.* Minimum diameter, five-eighths (⅝) of an inch, wrought iron, steel or metal of equivalent strength. Minimum clear length, sixteen (16) preferably twenty-four (24) inches. Minimum clearance, two (2) preferably two and one-half (2½) inches.

(3) *Location.* Horizontal, two (2) over each sill step. Lower handhold shall be not less than twenty-four (24) nor more than thirty (30) inches above center line of coupler. Upper handhold shall be not less than fifteen (15) nor more than nineteen (19) inches above lower handhold. Clearance of outer end of handhold shall be not more than eight (8) inches from end of car.

(4) *Manner of application.* Side handholds shall be securely fastened with not less than one-half (½) inch bolts with nuts outside (when possible) and riveted over, or with not less than one-half (½) inch rivets.

(f) *Horizontal end-handholds*—(1) *Number.* Seven (7).

(2) *Dimensions.* Minimum diameter, five-eighths (⅝) of an inch, wrought iron, steel or other metal of equivalent strength. Minimum clear length, sixteen (16) inches. Minimum clearance, two (2) preferably two and one-half (2½) inches.

(3) *Location.* End-sill: One (1) near each side at the rear or trailing end of car on face of end-sill or sheathing over end-sill, projecting outward or downward. Clearance of outer end of handhold shall be not more than sixteen (16) inches from side of car.

(i) Lower: One near each side of the rear or trailing end of car, not less than twenty-four (24) nor more than thirty (30) inches above center line of coupler.

(ii) Upper: One (1) near each side at the rear or trailing end of car not less than fifteen (15) nor more than nineteen (19) inches above lower handholds. Clearance of outer ends of lower and upper handholds shall be not more than eight (8) inches from side of car. Lower and upper handholds shall be spaced to coincide with corresponding side handholds, a variation of two (2) inches being allowed. On front end of car there shall be one (1) additional end handhold full length of car not less than forty (40) nor more than fifty (50) inches above center line of coupler. Clearance of each end of handhold shall be not more than eight (8) inches from side of car. When construction will not permit the use of a single handhold, four (4) handholds, each not less than sixteen (16) inches in length may be used, provided dimensions and location coincide.

(4) *Manner of application.* End handholds shall be securely fastened with not less than one-half (½) inch bolts with the nuts outside (when possible) and riveted over, or with not less than one-half (½) inch rivets. When marker sockets or brackets are located so that they cannot be conveniently reached, suitable steps and handholds shall be provided for men to reach such sockets or brackets.

(g) *Uncoupling levers.* Each car shall be equipped to provide means of coupling and uncoupling without the necessity of men going between the cars.

§ 231.24 Box and other house cars with roofs, 16 feet 10 inches or more above top of rail.[1]

(a) *Hand brakes*—(1) *Number.* Same as specified for ''Box and Other House Cars.''

(2) *Dimensions.* Same as specified for ''Box and Other House Cars.''

(3) *Location.* Each hand brake shall be located so that it can be safely operated from the end-platform. Each brake shaft shall be located on end of car to left of center and not more than twenty-four (24) inches from left side of car.

(4) *Manner of application.* Same as specified for ''Box and Other House Cars.''

(b) *End-platforms*—(1) *Number.* Two (2).

(2) *Dimensions.* Width, not less than ten (10) inches. Length, full width of car.

(3) *Location.* One (1) on each end of car not more than eight (8) inches above center sill.

(4) *Manner of application.* Each end-platform shall be securely supported by not less than four (4) metal braces having a minimum cross sectional area three-eighths (⅜) by one and one-half (1½) inches or equivalent which shall be securely fastened to body of car with not less than one-half (½) inch bolts or rivets. The outside edge of each end-platform shall be not less than six (6) inches from a vertical plane parallel with end of car and passing through the inside face of knuckle when closed with coupler-horn against the buffer-block or end sill and cushioning device (if used) at full buff. End-platform shall be made of running board material as specified for ''Box and Other House Cars.''

(c) *Sill steps.* Same as specified for ''Box and Other House Cars.''

(d) *End-ladder clearance.* No part of car above end-sills within thirty (30) inches from side of car, except buffer block brake-shaft, brake wheel, end-platform, horizontal end handholds, or coupling lever shall extend to within twelve (12) inches of a vertical plane parallel with end of car and passing through the inside face of knuckle, when closed with the coupler horn against the buffer block or end-sill and cushioning device (if used) at full buff, and no other part of end of car or fixtures on same above end-sill, other than exceptions herein noted, shall extend beyond outer face of buffer block.

(e) *Side handholds*—(1) *Number.* Sixteen (16).

(2) *Dimensions.* Same as specified for ''Box and Other House Cars.''

(3) *Location.* Horizontal: Four (4) near each end and on each side of car spaced not more than nineteen (19) inches apart and with the bottom handhold located not more than twenty-one (21) inches from top tread of sill step, and top handhold shall coincide in height with horizontal end-platform handhold, a variation of two (2) inches being allowed. Spacing of side handholds shall be uniform within a limit of two (2) inches from top handhold to bottom handhold. Clearance of outer ends of handholds shall be not more than eight (8) inches from end of car.

(4) *Manner of application.* Same as specified for ''Box and Other House Cars,'' except each bottom handhold shall have foot guard or upward projection not less than two (2) inches in height near inside end.

(f) *Horizontal end handholds*—(1) *Number.* Four (4).

(2) *Dimension.* Same as specified for ''Box and Other House Cars.''

(3) *Location.* One (1) near each side of each end of car on outer edge of end platform, projecting downward with

[1] (a) Each car of this type built or rebuilt after (January 1, 1976) or under construction prior thereto and placed in service after (effective date) shall be equipped as specified in § 231.27(a) through (h) and (j) or, if it has roof hatches, as specified in § 231.28.

(b) Each car of this type placed in service after November 23, 1964 and before (effective date) shall be equipped—

(1) As specified in § 231.24; or

(2) As specified in § 231.27(a) through (h) and (j); or

(3) If it has roof hatches, as specified in § 231.28.

(c) Each car of this type placed in service before October 22, 1964, or under construction on October 22, 1964 and placed in service before November 23, 1964, shall be equipped—

(1) As specified in § 231.1; or

(2) As specified in §§ 231.1 and 231.27(i); or

(3) As specified in § 231.27(a) through (h) and (j); or

(4) If it has roof hatches, as specified in § 231.28.

clearance of outer end not more than sixteen (16) inches from side of car.

(4) *Manner of application.* Same as specified for ''Box and Other House Cars.''

(g) *Horizontal end-platform handholds*—(1) *Number.* Two (2).

(2) *Dimensions.* Same as specified for ''Horizontal End Handholds'' for ''Box and Other House Cars,'' except length shall extend across end of car.

(3) *Location.* Extending across each end of car, not less than forty-eight (48) nor more than sixty (60) inches above tread of end-platform with clearance at each end of not more than four (4) inches from side of car, supported by an extra leg near center of handholds.

(4) *Manner of application.* Same as specified for ''Horizontal End Handholds'' for ''Box and Other House Cars.''

(h) *Vertical end-handholds*—(1) *Number.* Four (4).

(2) *Dimensions.* Minimum diameter five-eighths (⅝) of an inch, wrought iron or steel. Minimum clearance, two (2), preferably two and one-half (2½) inches.

(3) *Location.* One (1) on each side of each end of car, not more than four (4) inches from side of car, extending downward from end of horizontal end-platform handhold to within eight (8) inches above tread of end-platform. One (1) continuous handhold with two (2) right angles, or two (2) right angle handholds, may take the place of two (2) specified vertical end-handholds and one (1) horizontal end-platform handhold, provided the dimensions and locations coincide, and extra legs at points of angle and center are provided and securely fastened to car.

(4) *Manner of application.* Same as specified for ''Box and Other House Cars.''

(i) *Uncoupling levers.* Same as specified for ''Box and Other House Cars.''

(j) *Painting and stenciling.* (1) That portion of each end of car more than fifteen (15) feet above top of rail shall be painted with contrasting reflectorized paint and shall bear the words ''No running board'' to the left of center and ''Excess height car'' to the right of center.

(2) Lettering to be not less than three (3) inches high. On each side-sill near end corner there shall be painted a yellow rectangular area with a three-fourths (¾) inch black border containing the words ''This car excess height—no running board.'' Lettering to be not less than one and one-half (1½) inches high. When car is equipped with center sill or underframe cushioning device having more than twelve (12) inches longitudinal impact absorbing travel, and a part of the uncoupling device and/or brake pipe is located parallel to the exposed end of the center sill, such part shall provide at least two (2) inches of clearance near the coupler of sufficient length to permit use as an emergency handhold during air hose coupling operation and the top of exposed ends of sliding center sill shall be coated with anti-skid paint.

[33 FR 19663, Dec. 25, 1968, as amended at 40 FR 34347, Aug. 15, 1975]

§ 231.25 Track motorcars (self-propelled 4-wheel cars which can be removed from the rails by men).

(a) *Handbrakes* (*includes foot operated brake*). Each track motorcar shall be equipped with an efficient handbrake so located that it can be safely operated while the car is in motion. Each handbrake shall be equipped with a ratchet or other suitable device which will provide a means of keeping the brake applied when car is not in motion.

NOTE: The requirements of this rule will be satisfied if the ratchet or other suitable device operates in connection with at least one handbrake on track motorcars that may be equipped with more than one such brake.

(b) *Handholds.* One or more safe and suitable handholds conveniently located shall be provided. Each handhold shall be securely fastened to car.

(c) *Sill steps or footboards.* Each track motorcar shall be equipped with safe and suitable sill steps or footboards conveniently located and securely fastened to car when bed or deck of track motorcar is more than 24 inches above top of rail.

(d) *Couplers.* When used to haul other cars, each track motorcar shall be equipped with a coupler at each end where such cars are coupled (1) which provides a safe and secure attachment, (2) which can be coupled or uncoupled

without the necessity of men going between the ends of the cars.

§ 231.26 Pushcars.

(a) *Handbrakes.* When used to transport persons, each pushcar shall be equipped with an efficient handbrake so located that it can be safely operated while the car is in motion.

(b) *Handholds* (*includes handles*). Each pushcar shall be provided with one or more secure handholds. When used to transport persons, each pushcar shall be provided with one or more safe and suitable handholds conveniently located above the top of the bed of each pushcar.

(c) *Sill steps or footboards.* When used to transport persons, each pushcar shall be equipped with safe and suitable sillsteps or footboards conveniently located and securely fastened to car, when bed or deck of pushcar is more than 24 inches above top of rail.

(d) *Couplers.* When moved together with other vehicles, each pushcar shall be equipped with a coupler at each end where such vehicles are coupled (1) which provides a safe and secure attachment, and (2) which can be coupled or uncoupled without the necessity of men going between the ends of the cars.

NOTE: Sections 231.25 and 231.26 are applicable only when the vehicles governed thereby are coupled together and moved together.

§ 231.27 Box and other house cars without roof hatches or placed in service after October 1, 1966.

(a) *Handbrakes.* The handbrake may be of any efficient design, but must provide the same degree of safety as, or a greater degree of safety than, the following specifications:

(1) *Number.* (i) Each box or other house car without roof hatches shall be equipped with an efficient vertical wheel handbrake which shall operate in harmony with the power brake thereon.

(ii) The handbrake may be of any efficient design, but must provide a total braking force applied to brake shoes not less than the total force applied to the brake shoes by the brake cylinders at 50 pounds per square inch.

(2) *Dimensions.* (i) The brake wheel may be deep or shallow, of malleable iron, wrought iron, steel, or other material of equivalent strength.

(ii) Overall diameter of brake wheel nominally twenty-two (22) inches.

(iii) Depth of brake wheel hub shall be two and five-eighths (2⅝) inches with square taper shaft fit, taper two (2) inches in twelve (12) inches with small end of taper fit seven-eighths (⅞) inches.

(iv) Brake wheel and drum shall be arranged so that both will revolve when applying and gradually releasing the handbrake. Handbrake shall be provided with means to prevent application of the brake by winding in a counterclockwise direction.

(v) Brake shaft shall be arranged with a square fit at its outer end to secure the handbrake wheel; said square fit shall be not less than seven-eighths (⅞) of an inch square. Square-fit taper: Nominally two (2) in twelve (12) inches (see Plate A).

(vi) All chains shall be not less than nine-sixteenths (9⁄16) inch BBB coil chain.

(vii) All handbrake rods shall be not less than three-fourths (¾) inch diameter.

(3) *Location.* (i) The handbrake shall be so located that it can be safely operated from horizontal end platform while car is in motion.

(ii) The brake shaft shall be located on end of car, to the left of and not less than seventeen (17) nor more than twenty-two (22) inches from center and not less than twenty-six (26) nor more than forty (40) inches above top of end-platform tread.

(4) *Manner of application.* (i) Brake wheel shall be held in position on brake shaft by a nut on a threaded extended end of brake shaft; said thread portion shall be not less than three-fourths (¾) of an inch in diameter; said nut shall be secured by riveting over or by the use of a locknut or suitable cotter.

(ii) Outside edge of brake wheel shall be not less than four (4) inches from a vertical plane parallel with end of car and passing through the inside face of knuckle when closed with coupler horn against the buffer block or end sill.

(iii) Handbrake housing shall be securely fastened to car.

(b) *End platforms*—(1) *Number.* Two (2).

(2) *Dimensions.* Width not less than eight (8) inches; length, not less than sixty (60) inches.

(3) *Location.* One (1) centered on each end of car between inner ends of handholds not more than eight (8) inches above top of center sill.

(4) *Manner of application.* (i) Each end platform shall be securely supported by not less than three (3) metal braces having a minimum cross sectional area of three-eighths (⅜) by one and one-half (1½) inches or equivalent, which shall be securely fastened to body of car with not less than one-half (½) inch bolts or rivets.

(ii) Where conventional draft gear or cushioning device having longitudinal travel less than six (6) inches is used the outside edge of each end platform shall be not less than twelve (12) inches from a vertical plane parallel with end of car and passing through the inside face of knuckle when closed with coupler horn against buffer block. Where cushioning device having longitudinal travel six (6) inches or more is used the outside edge of each end platform shall be not less than six (6) inches from a vertical plane parallel with end of car and passing through the inside face of knuckle when closed with end sill and cushioning device at full buff. End platform shall be made of wood or of material which provides the same as or a greater degree of safety than wood of 1⅛ inches thickness. When made of material other than wood the tread surface shall be of anti-skid design and constructed with sufficient open space to permit the elimination of snow and ice from the tread surface.

(c) *Sill steps*—(1) *Number.* Four (4).

(2) *Dimensions.* Minimum cross-sectional area one-half (½) by one and one-half (1½) inches, or equivalent, of wrought iron, steel, or other material of equivalent strength. Minimum length of tread, ten (10), preferably twelve (12) inches. Minimum clear depth, eight (8) inches.

(3) *Location.* (i) One (1) near each end of each side car, so that there shall be no more than eighteen (18) inches from end of car to center of tread of sill step.

(ii) Outside edge of tread of step shall be not more than four (4) inches inside of face of side of car, preferably flush with side of car.

(iii) Tread shall be not more than twenty-four (24), preferably not more than twenty-two (22) inches above the top of rail.

(4) *Manner of application.* (i) Sill steps exceeding twenty-one (21) inches in depth shall have an additional tread.

(ii) Sill steps shall be securely fastened with not less than one-half (½) inch bolts with nuts outside (when possible) and riveted over, or with not less than one-half (½) inch rivets.

(d) *End ladder* (*appliances*) *clearance.* No part of car above end sills within thirty (30) inches from side of car, except buffer block, brake shaft, brake wheel, end platform, horizontal end handholds, or uncoupling lever shall extend to within twelve (12) inches of a vertical plane parallel with end of car and passing through the inside face of knuckle, when closed with the coupler horn against the buffer block or end sill and cushioning device (if used) at full buff, and no other part of end of car or fixtures on same above end sill, other than exceptions herein noted, shall extend beyond outer face of buffer block.

(e) *Side handholds*—(1) *Number.* Sixteen (16).

(2) *Dimensions.* Minimum diameter, five-eighths (⅝) of an inch, wrought iron, steel, or other material of equivalent strength. Minimum clear length, sixteen (16) inches, preferably twenty-four (24) inches. Minimum clearance, two (2), preferably two and one-half (2½) inches.

(3) *Location.* Horizontal; four (4) near each end and on each side of car spaced not more than nineteen (19) inches apart and with the bottom handhold located not more than twenty-one (21) inches from top tread of sill step, and top handhold shall coincide in height with top end handhold, a variation of two (2) inches being allowed. Spacing of side handholds shall be uniform within a limit of two (2) inches from top handhold to bottom handhold. Clearance of outer ends of handholds shall be not more than eight (8) inches from end of car.

(4) *Manner of application.* Side handholds shall be securely fastened with not less than one-half (½) inch bolts with nuts outside (when possible) and riveted over, or with not less than

one-half (½) inch rivets. Each bottom handhold shall have foot guard or upward projection not less than two (2) inches in height near inside end.

(f) *End handholds*—(1) *Number.* Sixteen (16).

(2) *Dimensions.* (i) Minimum diameter, five-eighths (⅝) of an inch, wrought iron, steel, or other material of equivalent strength.

(ii) Minimum clear length, sixteen (16) inches, preferably twenty-four (24) inches.

(iii) Minimum clearance, two (2) preferably two and one-half (2½) inches.

(3) *Location.* Horizontal: Four (4) near each side and on each end of car spaced not more than nineteen (19) inches apart and with the bottom handhold located not more than twenty-one (21) inches from top tread of sill step, and top handhold shall coincide in height with end platform handholds, a variation of two (2) inches being allowed. Clearance of outer ends of handholds shall be not more than eight (8) inches from side of car.

(4) *Manner of application.* End handholds shall be securely fastened with not less than one-half (½) inch bolts with nuts outside (when possible) and riveted over, or with not less than one-half (½) inch rivets. Each bottom handhold shall have foot guard or upward projection not less than two (2) inches in height near inside end.

(g) *Horizontal end-platform handholds*—(1) *Number.* Two (2).

(2) *Dimensions.* (i) Minimum diameter, five-eighths (⅝) of an inch, wrought iron, steel, or other material of equivalent strength.

(ii) Minimum clearance, two (2) preferably two and one-half (2½) inches.

(iii) Minimum clear length sixty (60) inches. When security of attachment requires, an extra supporting leg may be applied near center of clear length.

(3) *Location.* One (1) on each end of car above end platform. Outer legs shall be not more than six (6) inches from inner legs of top end handholds. Height above tread of end platform: Not less than forty-eight (48) nor more than sixty (60) inches.

(4) *Manner of application.* End-platform handholds shall be securely fastened with not less than one-half (½) inch bolts with nuts outside (when possible) and riveted over, or with not less than one-half (½) inch rivets.

(h) *Uncoupling levers*—(1) *Number.* Two (2).

(2) *Dimensions.* (i) Handles of uncoupling levers, except those shown on Plate B or of similar designs, shall be not more than six (6) inches from side of car.

(ii) Uncoupling levers of design shown on Plate B and of similar designs shall conform to the following prescribed limits:

(*a*) Handles shall be not more than twelve (12), preferably nine (9) inches from sides of car. Center lift arms shall be not less than seven (7) inches long.

(*b*) Center of eye at end of center lift arm shall be not more than three and one-half (3½) inches beyond center of eye of uncoupling pin of coupler when horn of coupler is against the buffer block or end sill (see Plate B).

(*c*) End of handles shall extend not less than four (4) inches below bottom of end sill or shall be so constructed as to give a minimum clearance of two (2) inches around handle. Minimum drop of handles shall be twelve (12) inches; maximum, fifteen (15) inches overall (see Plate B).

(iii) Handles of uncoupling levers of the ''rocking'' or ''push-down'' type shall be not less than eighteen (18) inches from top of rail when lockblock has released knuckle, and a suitable stop shall be provided to prevent inside arm from flying up in case of breakage.

(3) *Location.* One (1) on each end of car. When single lever is used, it shall be placed on left side of end of car.

(i) *Existing box and other house cars without roof hatches.* (1) Box and other house cars without roof hatches built on or before April 1, 1966, or under construction prior thereto and placed in service before October 1, 1966, shall be deemed equipped as nearly as possible within the intent of § 231.1 and of this section when:

(i) The running board, roof handholds over side and end ladders at ''A'' end of car and ladder treads above the fourth tread from bottom of side and end ladder at ''A'' end are removed;

(ii) One (1) horizontal end-platform handhold is applied on each end of car as specified in this section except the right hand end shall be not more than

eight (8) inches from side of car, or where car end contour makes impractical the use of a single continuous end handhold, there is applied the equivalent consisting of two (2) handholds, the center handhold to be a minimum of thirty (30) inches in clear length and the handhold to the right to be a minimum of nineteen (19) inches in clear length and to extend to within eight (8) inches of the right side of the car, such handholds to be not more than twelve (12) inches apart; and

(iii) With handbrake operated near roof of car: a brake step shall be provided as specified in §231.1 and lettering one and one-half (1½) inches high shall be painted on a yellow background on side sill near ''B'' end of car with a three-fourths (¾) inch black border containing the words ''Keep Off Roof—No Running Board,'' or with handbrake operated from approximate level of top of end sill: roof handholds and side and end ladder treads above the fourth tread from the bottom of ladders at ''B'' end of car shall be removed and a brake step as specified by §231.1 shall be used with top of tread surface being level with or not more than four (4) inches below adjacent end handhold.

(2) Paragraph (i)(1)(ii) of this section shall not apply to cars equipped with end platforms and end platform handholds.

(j) *Painting and marking.* Box and other house cars with roofs 16 feet and 10 inches or more above top of rail shall be painted and marked as follows:

(1) That portion of each end of the car which is more than fifteen (15) feet above top of rail shall be painted with contrasting reflectorized paint and bear the words ''excess height car'' in lettering not less than three (3) inches high; and

(2) On each side sill near end corner there shall be painted or otherwise displayed a yellow rectangular area with a three-fourths (¾) inch black border containing the words ''this car excess height'' in lettering not less than one and one-half (1½) inches high.

(Secs. 2, 4, and 6, 27 Stat. 531, as amended; secs, 1 and 3, 32 Stat. 943, as amended; sec. 6(e) and (f), 80 Stat. 939 (45 U.S.C. 2, 4, 6, 8, and 10, 11–16 and 49 U.S.C. 103(c)(1))

[33 FR 19663, Dec. 25, 1968, as amended at 40 FR 34347, Aug. 15, 1975; 49 FR 26745, June 29, 1984]

§231.28 Box and other house cars with roof hatches built or placed in service after October 1, 1966.

The specifications of §231.27 shall apply except as to the following:

(a) *Running boards.* Same as specified in §231.1, except: the end of longitudinal running board shall be not less than six (6) inches from a vertical plane parallel with end of car and passing through the inside face of knuckle when closed with coupler horn against buffer block or end sill.

(b) *Ladders*—(1) *Number.* Two (2).

(2) *Dimensions.* (i) Minimum clear length of tread: Sixteen (16) inches.

(ii) Maximum spacing between treads nineteen (19) inches.

(3) *Location.* One (1) on each end of car not more than eight (8) inches from left-hand side.

(4) *Manner of application.* Same as specified in §231.1.

(c) *Roof handholds*—(1) *Number.* Two (2), one (1) over each ladder.

(2) *Dimensions.* Same as specified in §231.1.

(3) *Location.* On roof of car. One (1) parallel to treads of each ladder, not less than eight (8) nor more than fifteen (15) inches from edge of roof, except on refrigerator cars where ice hatches prevent, when location may be nearer edge of roof.

(4) *Manner of application.* Same as specified in §231.1.

(d) *End handholds.* (Treads of end ladders are end handholds.) Same as specified for §231.27.

(e) *Existing box and other house cars with roof hatches.* Box and other house cars with roof hatches built on or before April 1, 1966, or under construction prior thereto and placed in service before October 1, 1966, shall be deemed equipped as nearly as possible within the intent of §231.1 and of this section when: Equipped as specified in §231.1, except (1) the side ladder treads above the fourth tread from bottom of side ladder near ''A'' end of car and roof handhold over the side ladder near ''A'' end shall be removed; (2) and (1) end platform handhold shall be provided on

each end of car as specified in § 231.27(i); and when handbrake is operated near roof of car a brake step shall be provided as specified by § 231.1 or when handbrake is operated from approximate level of top of end sill the roof handhold over side ladder near ''B'' end and treads above the fourth tread from bottom of side ladder near ''B'' end shall be removed and a brake step as specified in § 231.1 shall be used with top of tread surface level with or not more than four (4) inches below adjacent end handhold.

(Secs. 2, 4, and 6, 27 Stat. 531, as amended; secs, 1 and 3, 32 Stat. 943, as amended; sec. 6(e) and (f), 80 Stat. 939 (45 U.S.C. 2, 4, 6, 8, and 10, 11–16 and 49 U.S.C. 103(c)(1))

[33 FR 19663, Dec. 25, 1968, as amended at 49 FR 26745, June 29, 1984]

§ 231.29 Road locomotives with corner stairways.

After September 30, 1979, road locomotives with corner stairway openings must be equipped with (a) uncoupling mechanisms that can be operated safely from the bottom stairway opening step as well as ground level, and (b) the vertical handholds and horizontal end handholds prescribed in § 231.30(e) and (g). No part of the uncoupling mechanism may extend into the stairway opening or end platform area when the mechanism is in its normal position or when it is operated. Each carrier shall so equip forty percent (40 percent) of its road locomotives by October 1, 1977, seventy percent (70 percent) by October 1, 1978, and all its road locomotives by October 1, 1979.

[41 FR 37783, Sept. 8, 1976]

§ 231.30 Locomotives used in switching service.

(a) *General requirements.* (1) Except for steam locomotives equipped as provided in § 231.16 of this part, all locomotives used in switching service built after March 31, 1977, must be equipped as provided in this section.

(2) Except for steam locomotives equipped as prescribed in § 231.16 of this part, all locomotives built prior to April 1, 1977, used in switching service after September 30, 1979, shall be equipped as provided in this section. Each carrier shall so equip forty percent (40 percent) of such locomotives by October 1, 1977, seventy percent (70 percent) by October 1, 1978, and all such locomotives by October 1, 1979.

(3) Locomotives without corner stairway openings may not be used to perform any switching service after September 30, 1979 except passenger car switching service at passenger stations.

(b) *Definitions.* (1) *Locomotive used in switching service* means a locomotive regularly assigned to perform yard switching service.

(2) *Switching service* means the classification of cars according to commodity or destination; assembling of cars for train movements; changing the position of cars for purposes of loading, unloading, or weighing, placing of locomotives and cars for repair or storage; or moving of rail equipment in connection with work service that does not constitute a road movement. However, this term does not include movement of a train or part of a train within yard limits by the road locomotive and the placement of locomotives or cars in a train or their removal from a train by the road locomotive while en route to the train's destination.

(3) *Safety tread surface* means that portion of anti-skid surface of a switching step that actually is contacted by a shoe or boot.

(4) *Uncoupling mechanism* means the arrangement for operating the coupler lock lift, including the uncoupling lever and all other appurtenances that facilitate operation of the coupler.

(c) *Switching step*—(1) *Number.* Each locomotive used in switching service must have four (4) switching steps. (See Plate A)

(2) *Dimensions.* Each such switching step must have—

(i) On locomotives built after March 31, 1977, a minimum width of twenty-four (24) inches and a minimum depth of twelve (12) inches, except when necessary to accommodate the turning arc of a six-wheel truck and its appurtenances, the inside edge of the switching step shall have a minimum width of seventeen (17) inches (See Plate B);

(ii) On locomotives built prior to April 1, 1977, a minimum width of eighteen (18) inches, and a minimum depth of eight (8) inches;

(iii) A backstop, solid or perforated, with minimum height of backstop of six (6) inches above the safety tread surface; and

(iv) A height of not more than nineteen (19) inches, preferably fifteen (15) inches, measured from top of rail to the safety tread surface.

(3) *Location.* Switching steps must be located on each side near each end of a locomotive used in switching service. The bottom step of the stairway at these locations may also serve as a switching step if it meets all of the requirements of this section.

(4) *Manner of application.* (i) Switching steps must be supported by a bracket at each end and fastened to the bracket by two bolts or rivets of at least one-half (½) inch diameter or by a weldment of at least twice the strength of a bolted attachment.

(ii) Vertical clearance must be unobstructed, except for minor intrusions created by mechanical fasteners or a small triangular gusset plate at the platform level walkway, and free for use for at least a distance of eighty-four (84) inches over a portion of the switching step that is not less than seven (7) inches deep by eighteen (18) inches wide on locomotives built prior to April 1, 1977, and of not less than seven (7) inches deep by twenty-four (24) inches wide on locomotives built after March 31, 1977.

(5) *Material.* (i) Steel or other material of equivalent or better strength and deflection characteristics, anti-skid, safety design, having at least fifty percent (50%) of the tread surface as open space must be used.

(ii) When the step material creates a second level safety tread surface, the maximum difference in surface levels may not exceed three-eighths (⅜) of an inch.

(iii) The safety tread surface must extend to within one-half (½) inch of each edge of the step.

(6) *Visibility.* The outer edge of each switching step that is not illuminated must be painted a contrasting color. On locomotives built after March 31, 1977, switching steps shall be illuminated; on multiple-unit locomotive consists used in switching service, only the front switching steps of the leading unit and the rear switching steps of the trailing unit must be illuminated.

(d) *End footboards and pilot steps.* (1) Except for steam locomotives equipped as provided in § 231.16, locomotives used in switching service built after March 31, 1975, may not be equipped with end footboards or pilot steps.

(2) Except for steam locomotives equipped as provided in § 231.16, locomotives used in switching service built before April 1, 1975, may not be equipped with end footboards or pilot steps after September 30, 1978. Whenever end footboards or pilot steps are removed from a locomotive, the uncoupling mechanism and horizontal end handholds of the locomotive must be modified to comply with paragraphs (f) and (g) of this section.

(e) *Vertical handholds.* Each switching step must be provided with two (2) vertical handholds or handrails, one on each side of the switching step stairway.

(1) On locomotives built after March 31, 1977, each vertical handhold must—

(i) Be constructed of wrought iron, steel or other material of equivalent strength and durability that is at least one (1) inch diameter and be securely fastened to the locomotive with one-half (½) inch or larger bolts or rivets;

(ii) Begin not less than six (6) inches nor more than thirty-two (32) inches above the safety tread surface of the switching step; on units with high snowplows, each must begin not more than thirty-six (36) inches above the safety tread surface of the switching step;

(iii) Extend upward from switching step surface at least forty-eight (48) inches;

(iv) Be painted in a contrasting color to a height of at least forty-eight (48) inches above the safety tread surface of the switching step; and

(v) Provide at least two and one-half (2½) inches of usable hand clearance throughout its entire length.

(2) On locomotives built before April 1, 1977, each vertical handhold must—

(i) Be constructed of wrought iron, steel or other material of equivalent strength and durability that is at least seven-eighths (⅞) inch in diameter and be securely fastened with one-half (½) inch or larger bolts or rivets;

(ii) Begin not less than five (5) inches nor more than thirty-two (32) inches above the safety tread surface; on units with high snowplows, each must begin not more than thirty-six (36) inches above the safety tread surface;

(iii) Extend upward from safety tread surface of the switching step at least forty-eight (48) inches;

(iv) Be painted in a contrasting color to a height of at least forty-eight (48) inches above the safety tread surface of the switching step; and

(v) Provide at least two and one-half (2½) inches usable hand clearance throughout its entire length.

(f) *Uncoupling mechanisms.* Each locomotive used in switching service must have means for operating the uncoupling mechanism safely from the switching step as well as from ground level. No part of the uncoupling mechanism may extend into the switching step or stairway opening or end platform area when the mechanism is in its normal position or when it is operated. (See Plate A)

(g) *Horizontal end handholds.* Each locomotive used in switching service must have four (4) horizontal end handholds.

(1) Each horizontal end handhold must—

(i) Be constructed of wrought iron, steel or other material of equivalent strength and durability that is at least five-eighths (⅝) inch in diameter and be securely fastened to the locomotive with one-half (½) inch or larger bolts or rivets;

(ii) Be located not less than thirty (30) inches nor more than fifty (50) inches above the top of rail with its outer end not more than 16 inches from the side of the locomotive; on units with a high snowplow that makes normal end handhold location inaccessible, end handhold shall be located on top of plow blade, with the center of the handhold not more than fifty-three (53) inches above the top of rail, and be in line with the slope of the plow blade;

(iii) Be at least fourteen (14) inches long; and

(iv) Provide at least two (2) inches, preferably two and one-half (2½) inches, usable hand clearance throughout its entire length.

(2) An uncoupling lever may also serve as a horizontal end handhold if it complies with the requirements of this paragraph. When an uncoupling lever also serves as the horizontal end handhold, it is considered to be securely fastened if its securement brackets are attached to the locomotive by one-half (½) inch or larger bolts or rivets and its movement between those brackets is limited to the rotation necessary for performance of the uncoupling function.

ITEM	DIMENSION NEW UNITS	DIMENSION EXISTING UNITS
A. Height of switching step above rail	15" preferred 19" maximum	15" preferred 19" maximum
B. Minimum width of switching step (between stairway supports)	24"	18"
C. Minimum depth of switching step	12"	8"
D. Minimum height of backstop	6"	6"
E. Minimum distance from front edge of switching step to front edge of first step above	7"	7"
F. Distance above switching step for start of vertical handholds Minimum-Maximum	6"-32"	5"-32"
EXCEPTION: Maximum for units with high snowplows	36"	36"
G. Clear height above switching step	84"	84"
H. Vertical handhold clearance	2½" minimum	2½" minimum
I. Height above top of rail for horizontal handhold or uncoupling lever if used as horizontal handhold	30"-50"	30"-50"
EXCEPTION: Maximum for units with high snowplow	53"	53"
J. Minimum height above switching step of vertical handhold	48"	48"
K. Horizontal handhold clearance or uncoupling lever clearance if used as horizontal handhold	2"-2½"	2"-2½"

NOTES:

1. Switching steps must be supported by a bracket at each end and fastened to the bracket by two bolts or rivets of at least one-half (½) inch diameter or by a weldment of at least twice the strength of a bolted attachment.

2. The outer edge of each switching step that is not illuminated must be painted a contrasting color.

3. Vertical handholds must be painted in a contrasting color to a height of at least forty-eight (48) inches above the safety tread surface of the switching step.

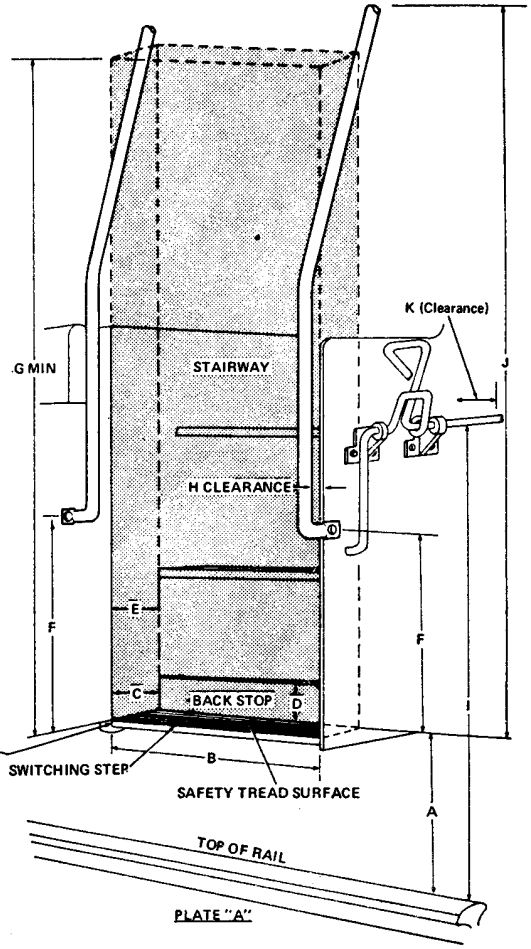

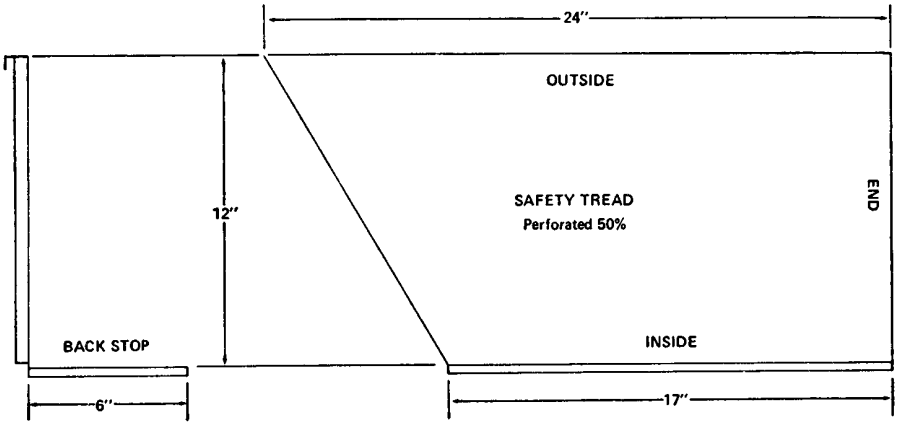

PLATE "B"

SWITCHING STEP SHOWING INSIDE RELIEF FOR CLEARANCE OF SIX-WHEEL TRUCK

[41 FR 37783, Sept. 8, 1976]

APPENDIX A TO PART 231—SCHEDULE OF CIVIL PENALTIES [1]

FRA safety appliance defect code section [2]	Violation	Willful violation
110.A1 Hand Brake or Hand Brake Part Missing	$5,000	$7,500
110.A2 Hand Brake or Hand Brake Part Broken	5,000	7,500
110.A3 Hand Brake or Hand Brake Part Loose or Worn	2,500	5,000
110.B1 Hand Brake Inoperative	5,000	7,500
110.B2 Hand Brake Inefficient	2,500	5,000
110.B3 Hand Brake Improperly Applied	2,500	5,000
110.B4 Hand Brake Incorrectly located	2,500	5,000
110.B5 Hand Brake Shaft Welded or Wrong Dimension	2,500	5,000
110.B6 Hand Brake Shaft Not Retained in Operating Position	2,500	5,000
110.B8 Hand Brake or Hand Brake Parts Wrong Design	2,500	5,000
114.B2 Hand Brake Wheel or Lever Has Insufficient Clearance Around Rim or Handle	2,500	5,000
114.B3 Hand Brake Wheel/Lever Clearance Insufficient to Vertical Plane Through Inside Face of Knuckle	2,500	5,000
120.A1 Brake Step Missing Except by Design	5,000	7,500
120.A2 Brake Step or Brace Broken or Decayed	2,500	5,000
120.A3 Brake Step or Brace Loose	2,500	5,000
120.B1 Brake Step or Brace Bent	2,500	5,000

APPENDIX A TO PART 231—SCHEDULE OF CIVIL PENALTIES [1]—Continued

FRA safety appliance defect code section [2]	Violation	Willful violation
120.B2 Brake Step or Wrong Dimensions	2,500	5,000
120.C1 Brake Step Improperly Applied	2,500	5,000
120.C2 Brake Step Improperly Located	2,500	5,000
120.C3 Brake Step With Less Than 4″ Clearance to Vertical Plane Through Inside Face of Knuckle	2,500	5,000
120.C4 Brake Step Obstructed or Otherwise Unsafe	2,500	5,000
124.A1 Running Board Missing or Part Missing Except By Design	5,000	7,500
124.A2 Running Board Broken or Decayed	5,000	7,500
124.A3 Running Board Loose Presents a Tripping Hazard or Other Unsafe Condition	2,500	5,000
124.A4 Running Board Wrong Material	2,500	5,000
124.B1 Running Board Bent to the Extent that It is Unsafe	2,500	5,000
124.B2 Running Board Wrong Dimensions	2,500	5,000
124.B3 Running Board Wrong Location	2,500	5,000
124.C1 Running Board Improperly Applied	2,500	5,000
124.C2 Running Board Obstructed	2,500	5,000
126.A1 End Platform Missing or Part Except By Design	5,000	7,500

APPENDIX A TO PART 231—SCHEDULE OF CIVIL PENALTIES [1]—Continued

FRA safety appliance defect code section [2]	Violation	Willful violation
126.A2 End Platform Broken or Decayed	5,000	7,500
126.A3 End Platform Loose	2,500	5,000
126.B1 End Platform or Brace Bent	2,500	5,000
126.B2 End Platform Wrong Dimensions	2,500	5,000
126.C1 End Platform Improperly Applied	2,500	5,000
126.C2 End Platform With Less Than Required Clearance to Vertical Plane Through Inside Knuckle	2,500	5,000
126.C3 End Platform Improperly Located	2,500	5,000
126.C4 End Platform Obstructed	5,000	7,500
128.A1 Platform or Switching Step Missing	5,000	7,500
128.A2 Platform or Switching Step Broken or Decayed	5,000	7,500
128.A3 Platform or Switching Step Loose	2,500	5,000
128.B1 Platform or Switching Step Bent	2,500	5,000
128.B2 Platform or Switching Step Does Not Meet the Required Location or Dimensions	2,500	5,000
128.C1 Platform or Switching Step Improperly Applied or Repaired	2,500	5,000
128.C2 Platform or Switching Step Obstructed	2,500	5,000
128.D1 Switching Step Back Stop or Kick Plate Missing	2,500	5,000
128.D2 Switching Step Not Illuminated When Required	2,500	5,000
128.D3 Non-Illuminated Step Not Painted Contrasting Color	1,000	2,000
130.A1 Sill Step or Additional Tread, Missing	5,000	7,500
130.A2 Sill Step or Additional Tread, Broken	5,000	7,500
130.A3 Sill Step or Additional Tread, Loose	2,500	5,000
130.B1 Sill Step or Additional Tread, Bent	2,500	5,000
130.B2 Sill Step or Additional Tread, Having Wrong Dimensions or Improperly Located	2,500	5,000
130.B3 Sill Step Improperly Applied	2,500	5,000
132.A1 Side Missing Step	5,000	7,500
132.A2 Side Door Step Broken	5,000	7,500
132.A3 Side Door Step Loose	2,500	5,000
132.B1 Side Door Step Bent	2,500	5,000
132.B2 Side Door Step Having Wrong Dimensions	2,500	5,000
134.A1 Ladder Missing	5,000	7,500
134.A2 Ladder Broken	5,000	7,500
134.A3 Ladder Loose	2,500	5,000
134.B1 Ladder Bent	2,500	5,000
134.B2 Ladder Having Wrong Dimensions	2,500	5,000
134.C1 Ladder Improperly Applied	2,500	5,000
134.C2 Ladder Having Insufficient Clearance or Improperly Located	2,500	5,000

APPENDIX A TO PART 231—SCHEDULE OF CIVIL PENALTIES [1]—Continued

FRA safety appliance defect code section [2]	Violation	Willful violation
134.C3 Ladder Wrong Design	2,500	5,000
134.C4 Ladder Wrong Material	2,500	5,000
134.D1 End Clearance Insufficient	2,500	5,000
136.A1 Ladder Tread or Handholds Missing	5,000	7,500
136.A2 Ladder Tread or Handhold Broken	5,000	7,500
136.A3 Ladder Tread or Handhold Loose Except By Design	2,500	5,000
136.B1 Ladder Tread or Handhold Bent to The Extent That It May Be Unsafe	2,500	5,000
136.B2 Ladder Tread or Handhold Wrong Dimensions	2,500	5,000
136.C1 Ladder Tread or Handhold Improperly Applied	2,500	5,000
136.C2 Ladder Tread or Handhold Having Wrong Clearance	2,500	5,000
136.C3 Ladder or Handhold Improperly Located	2,500	5,000
136.C4 Ladder Tread or Handhold Obstructed	2,500	5,000
136.C5 Ladder Tread Without Footguards	2,500	5,000
138.A1 Hand or Safety Railing Missing	5,000	7,500
138.A2 Hand or Safety Railing Broken	5,000	7,500
138.A3 Hand or Safety Railing Loose Except by Design	2,500	5,000
138.B1 Hand or Safety Railing Bent	2,500	5,000
138.B2 Hand or Safety Railing Wrong Dimensions	2,500	5,000
138.C1 Hand or Safety Railing Improperly Applied	2,500	5,000
138.C2 Hand or Safety Railing Having Less Than the Required Clearance	2,500	5,000
138.C3 Hand or Safety Railing Improperly Located	2,500	5,000
140.A1 Uncoupling Lever Missing	2,500	5,000
140.A2 Uncoupling Lever Broken or Disconnected	2,500	5,000
140.B1 Uncoupling Lever Bent Will not Safely and Reasonably Function As Intended	2,500	5,000
140.C1 Uncoupling Lever Bracket Bent Lever Will Not Function Properly	2,500	5,000
140.C2 Uncoupling Lever Bracket Broken or Missing	2,500	5,000
140.D1 Uncoupling Lever Wrong Dimension	2,500	5,000
140.D2 Uncoupling Lever With Improper Handle Clearance	2,500	5,000
144.A1 Coupler Missing	5,000	7,500
144.B1 Coupler Height Incorrect	2,500	5,000
144.C1 Coupler Inoperative	2,500	5,000
145.A1 Kick Plates Missing	2,500	5,000
145.A2 Kick Plates Broken	2,500	5,000
145.B1 Kick Plates Wrong Dimensions	2,500	5,000
145.B2 Kick Plates Improper Clearance	2,500	5,000
145.B3 Kick Plates Insecure Or Improperly Applied	2,500	5,000

APPENDIX A TO PART 231—SCHEDULE OF CIVIL PENALTIES [1]—Continued

FRA safety appliance defect code section [2]	Violation	Willful violation
146.A Notice or Stencil not Posted on Cabooses with Running Boards Removed	500	1,000
146.B Safe Means not Provided to Clean or Maintain Windows of Caboose	1,000	2,000

[1] A penalty may be assessed against an individual only for a willful violation. The Administrator reserves the right to assess a penalty of up to $20,000 for any violation where circumstances warrant. See 49 CFR part 209, appendix A.

[2] This schedule uses section numbers from FRA's Safety Appliance Defect Code, a restatement of the CFR text in a reorganized format. For convenience, and as an exception to FRA's general policy, penalty citations will cite the defect code rather than the CFR. FRA reserves the right, should litigation become necessary, to substitute in its complaint the CFR and/or statutory citation in place of the defect code section cited in the penalty demand letter.

[53 FR 52933, Dec. 29, 1988]

PART 232—RAILROAD POWER BRAKES AND DRAWBARS

Sec.
232.0 Applicability and penalties.
232.1 Power brakes; minimum percentage.
232.2 Drawbars; standard height.
232.3 Power brakes and appliances for operating power-brake systems.

RULES FOR INSPECTION, TESTING AND MAINTENANCE OF AIR BRAKE EQUIPMENT

232.10 General rules; locomotives.
232.11 Train air brake system tests.
232.12 Initial terminal road train air brake tests.
232.13 Road train and intermediate terminal train air brake tests.
232.14 Inbound brake equipment inspection.
232.15 Double heading and helper service.
232.16 Running tests.
232.17 Freight and passenger train car brakes.
232.19 Design standards for one-way end-of-train devices.
232.21 Design and performance standards for two-way end-of-train devices.
232.23 Operations requiring use of two-way end-of-train devices; prohibition on purchase of nonconforming devices.
232.25 Inspection and testing of end-of-train devices.

APPENDIX A TO PART 232—SCHEDULE OF CIVIL PENALTIES
APPENDIX B TO PART 232—SPECIFICATIONS AND REQUIREMENTS FOR POWER BRAKES AND APPLIANCES FOR OPERATING POWER-BRAKE SYSTEMS FOR FREIGHT SERVICE

AUTHORITY: 49 U.S.C. 20102, 20103, 20107, 20108, 20110-20112, 20114, 20133, 20301–20304, 20701–20703, 21301, 21302, 21304, and 21311; Pub. L. 103–272 (1994); and 49 CFR 1.49 (c), (g), and (m).

SOURCE: 33 FR 19679, Dec. 25, 1968, unless otherwise noted.

§ 232.0 Applicability and penalties.

(a) Except as provided in paragraph (b), this part applies to all standard gage railroads.

(b) This part does not apply to:

(1) A railroad that operates only on track inside an installation which is not part of the general railroad system of transportation; or

(2) Rapid transit operations in an urban area that are not connected with the general railroad system of transportation.

(c) As used in this part, *carrier* means ''railroad,'' as that term is defined below.

(d) *Railroad* means all forms of non-highway ground transportation that run on rails or electromagnetic guideways, including (1) commuter or other short-haul rail passenger service in a metropolitan or suburban area, and (2) high speed ground transportation systems that connect metropolitan areas, without regard to whether they use new technologies not associated with traditional railroads. Such term does not include rapid transit operations within an urban area that are not connected to the general railroad system of transportation.

(e) Any person (including a railroad and any manager, supervisor, official, or other employee or agent of a railroad) who violates any requirement of this part or causes the violation of any such requirement is subject to a civil penalty of at least $250 and not more than $10,000 per violation, except that: Penalties may be assessed against individuals only for willful violations, and, where a grossly negligent violation or a pattern of repeated violations has created an imminent hazard of death or injury to persons, or has caused death or injury, a penalty not to exceed $20,000 per violation may be assessed. Each day a violation continues shall constitute a separate offense.

[54 FR 33230, Aug. 14, 1989]

§232.1 Power brakes; minimum percentage.

On and after September 1, 1910, on all railroads used in interstate commerce, whenever, as required by the Safety Appliance Act as amended March 2, 1903, any train is operated with power or train brakes, not less than 85 percent of the cars of such train shall have their brakes used and operated by the engineer of the locomotive drawing such train, and all power-brake cars in every such train which are associated together with the 85 percent shall have their brakes so used and operated.

§232.2 Drawbars; standard height.

Except on cars specified in the proviso in section 6 of the Safety Appliance Act of March 2, 1893 (sec. 6, 27 Stat. 532, 45 U.S.C. 6) as the same was amended April 1, 1896 (29 Stat. 85; 45 U.S.C. 6) the standard height of drawbars heretofore designated in compliance with law is hereby modified and changed in the manner hereinafter prescribed, to wit: The maximum height of drawbars for freight cars measured perpendicularly from the level of the tops of rails to the centers of drawbars for standard-gauge railroads in the United States subject to said act shall be 34½ inches, and the minimum height of drawbars for freight cars on such standard-gauge railroads measured in the same manner shall be 31½ inches, and on narrow-gauge railroads in the United States subject to said act the maximum height of drawbars for freight cars measured from the level of the tops of rails to the centers of drawbars shall be 26 inches, and the minimum height of drawbars for freight cars on such narrow-gauge railroads measured in the same manner shall be 23 inches, and on 2-foot-gauge railroads in the United States subject to said act the maximum height of drawbars for freight cars measured from the level of the tops of rails to the centers of drawbars shall be 17½ inches, and the minimum height of drawbars for freight cars on such 2-foot-gauge railroads measured in the same manner shall be 14½ inches.

§232.3 Power brakes and appliances for operating power-brake systems.

(a) The specifications and requirement for power brakes and appliances for operating power-brake systems for freight service set forth in the appendix to the report on further hearing, of May 30, 1945, are hereby adopted and prescribed. (See appendix to this part for order in Docket 13528.)

(b) [Reserved]

RULES FOR INSPECTION, TESTING AND MAINTENANCE OF AIR BRAKE EQUIPMENT

§232.10 General rules; locomotives.

(a) Air brake and hand brake equipment on locomotives including tender must be inspected and maintained in accordance with the requirements of the Locomotive Inspection and United States Safety Appliance Acts and related orders and regulations of the Federal Railroad Administrator (FRA).

(b) It must be known that air brake equipment on locomotives is in a safe and suitable condition for service.

(c) Compressor or compressors must be tested for capacity by orifice test as often as conditions require but not less frequently than required by law and orders of the FRA.

(d) Main reservoirs shall be subjected to tests periodically as required by law and orders of the FRA.

(e) Air guages must be tested periodically as required by law and orders of the FRA, and whenever any irregularity is reported. They shall be compared with an accurate deadweight tester, or test gauge. Gauges found inaccurate or defective must be repaired or replaced.

(f)(1) All operating portions of air brake equipment together with dirt collectors and filters must be cleaned, repaired and tested as often as conditions require to maintain them in a safe and suitable condition for service, and not less frequently than required by law and orders of the FRA.

(2) On locomotives so equipped, hand brakes, parts, and connections must be inspected, and necessary repairs made as often as the service requires, with date being suitably stencilled or tagged.

(g) The date of testing or cleaning of air brake equipment and the initials of the shop or station at which the work

was done shall be placed on a card displayed under transparent covering in the cab of each locomotive unit.

(h)(1) Minimum brake cylinder piston travel must be sufficient to provide proper brake shoe clearance when brakes are released.

(2) Maximum brake cylinder piston travel when locomotive is standing must not exceed the following:

	Inches
Steam locomotives:	
Cam type of driving wheel brake	3½
Other types of driving wheel brakes	6
Engine truck brake	8
Engine trailer truck brake	8
Tender brake (truck mounted and tender bed mounted)	8
Tender brake (body mounted)	9
Locomotives other than steam:	
Driving wheel brake	6
Swivel type truck brake with brakes on more than one truck operated by one brake cylinder	7
Swivel type truck brake equipped with one brake cylinder	8
Swivel type truck brake equipped with two or more brake cylinders	6

(i)(1) Foundation brake rigging, and safety supports, where used, must be maintained in a safe and suitable condition for service. Levers, rods, brake beams, hangars and pins must be of ample strength and must not bind or foul in any way that will affect proper operation of brakes. All pins must be properly applied and secured in place with suitable locking devices. Brake shoes must be properly applied and kept approximately in line with treads of wheels or other braking surfaces.

(2) No part of the foundation brake rigging and safety supports shall be closer to the rails than specified by law and orders of the FRA.

(j)(1) Main reservoir leakage: Leakage from main air reservoir and related piping shall not exceed an average of 3 pounds per minute in a test of three minutes' duration, made after the pressure has been reduced 40 percent below maximum pressure.

(2) Brake pipe leakage: Brake pipe leakage must not exceed 5 pounds per minute after a reduction of 10 pounds has been made from brake pipe air pressure of not less than 70 pounds.

(3) Brake cylinder leakage: With a full service application of brakes, and with communication to the brake cylinders closed, brakes must remain applied not less than five minutes.

(4) The main reservoir system of each unit shall be equipped with at least one safety valve, the capacity of which shall be sufficient to prevent an accumulation of pressure of more than 10 pounds per square inch above the maximum setting of the compressor governor fixed by the chief mechanical officer of the carrier operating the locomotive.

(5) A suitable governor shall be provided that will stop and start the air compressor within 5 pounds above or below the pressures fixed.

(6) Compressor governor when used in connection with the automatic air brake system shall be so adjusted that the compressor will start when the main reservoir pressure is not less than 15 pounds above the maximum brake-pipe pressure fixed by the rules of the carrier and will not stop the compressor until the reservoir pressure has increased not less than 10 pounds.

(k) The communicating signal system on locomotives when used in passenger service must be tested and known to be in a safe and suitable condition for service before each trip.

(l) Enginemen when taking charge of locomotives must know that the brakes are in operative condition.

(m) In freezing weather drain cocks on air compressors of steam locomotives must be left open while compressors are shut off.

(n) Air pressure regulating devices must be adjusted for the following pressures:

Locomotives	Pounds
(1) Minimum brake pipe air pressure:	
Road Service	70
Switch Service	60
(2) Minimum differential between brake pipe and main reservoir air pressures, with brake valve in running position	15
(3) Safety valve for straight air brake	30–55
(4) Safety valve for LT, ET, No. 8–EL, No. 14 El, No. 6–DS, No. 6–BL and No. 6–SL equipment	30–68
(5) Safety valve for HSC and No. 24–RL equipment	30–75
(6) Reducing valve for independent or straight air brake	30–50
(7) Self-lapping portion for electro-pneumatic brake (minimum full application pressure)	50
(8) Self-lapping portion for independent air brake (full application pressure)	30–50
(9) Reducing valve for air signal	40–60

Locomotives	Pounds
(10) Reducing valve for high-speed brake (minimum)	50

Cars	Pounds
(11) Reducing valve for high-speed brake	58–62
(12) Safety valve for PS, LN, UC, AML, AMU and AB–1–B air brakes	58–62
(13) Safety valve for HSC air brake	58–77
(14) Governor valve for water raising system	60
(15) Reducing valve for water raising system	20–30

§ 232.11 Train air brake system tests.

(a) Supervisors are jointly responsible with inspectors, enginemen and trainmen for condition of air brake and air signal equipment on motive power and cars to the extent that it is possible to detect defective equipment by required air tests.

(b) Communicating signal system on passenger equipment trains must be tested and known to be in a suitable condition for service before leaving terminal.

(c) Each train must have the air brakes in effective operating condition, and at no time shall the number and location of operative air brakes be less than permitted by Federal requirements. When piston travel is in excess of 10½ inches, the air brake cannot be considered in effective operating condition.

(d) Condensation must be blown from the pipe from which air is taken before connecting yard line or motive power to train.

[33 FR 19679, Dec. 25, 1968, as amended at 47 FR 36794, Aug. 23, 1982]

§ 232.12 Initial terminal road train airbrake tests.

(a)(1) Each train must be inspected and tested as specified in this section by a qualified person at points—

(i) Where the train is originally made up (initial terminal);

(ii) Where train consist is changed, other than by adding or removing a solid block of cars, and the train brake system remains charged; and

(iii) Where the train is received in interchange if the train consist is changed other than by—

(A) Removing a solid block of cars from the head end or rear end of the train;

(B) Changing motive power;

(C) Removing or changing the caboose; or

(D) Any combination of the changes listed in (A), (B), and (C) of this subparagraph.

Where a carman is to perform the inspection and test under existing or future collective bargaining agreement, in those circumstances a carman alone will be considered a qualified person.

(2) A qualified person participating in the test and inspection or who has knowledge that it was made shall notify the engineer that the initial terminal road train air brake test has been satisfactorily performed. The qualified person shall provide the notification in writing if the road crew will report for duty after the qualified person goes off duty. The qualified person also shall provide the notification in writing if the train that has been inspected is to be moved in excess of 500 miles without being subjected to another test pursuant to either this section or § 232.13 of this part.

(Approved by the Office of Management and Budget under OMB control number 2130–0008)

(b) Each carrier shall designate additional inspection points not more than 1,000 miles apart where intermediate inspection will be made to determine that—

(1) Brake pipe pressure leakage does not exceed five pounds per minute;

(2) Brakes apply on each car in response to a 20-pound service brake pipe pressure reduction; and

(3) Brake rigging is properly secured and does not bind or foul.

(c) Train airbrake system must be charged to required air pressure, angle cocks and cutout cocks must be properly positioned, air hose must be properly coupled and must be in condition for service. An examination must be made for leaks and necessary repairs made to reduce leakage to a minimum. Retaining valves and retaining valve pipes must be inspected and known to be in condition for service. If train is to be operated in electropneumatic brake operation, brake circuit cables must be properly connected.

(d)(1) After the airbrake system on a freight train is charged to within 15 pounds of the setting of the feed valve on the locomotive, but to not less than

60 pounds, as indicated by an accurate gauge at rear end of train, and on a passenger train when charged to not less than 70 pounds, and upon receiving the signal to apply brakes for test, a 15-pound brake pipe service reduction must be made in automatic brake operations, the brake valve lapped, and the number of pounds of brake pipe leakage per minute noted as indicated by brake pipe guage, after which brake pipe reduction must be increased to full service. Inspection of the train brakes must be made to determine that angle cocks are properly positioned, that the brakes are applied on each car, that piston travel is correct, that brake rigging does not bind or foul, and that all parts of the brake equipment are properly secured. When this inspection has been completed, the release signal must be given and brakes released and each brake inspected to see that all have released.

(2) When a passenger train is to be operated in electropneumatic brake operation and after completion of test of brakes as prescribed by paragraph (d)(1) of this section the brake system must be recharged to not less than 90 pounds air pressure, and upon receiving the signal to apply brakes for test, a minimum 20 pounds electropneumatic brake application must be made as indicated by the brake cylinder gage. Inspection of the train brakes must then be made to determine if brakes are applied on each car. When this inspection has been completed, the release signal must be given and brakes released and each brake inspected to see that all have released.

(3) When the locomotive used to haul the train is provided with means for maintaining brake pipe pressure at a constant level during service application of the train brakes, this feature must be cut out during train airbrake tests.

(e) Brake pipe leakage must not exceed 5 pounds per minute.

(f)(1) At initial terminal piston travel of body-mounted brake cylinders which is less than 7 inches or more than 9 inches must be adjusted to nominally 7 inches.

(2) Minimum brake cylinder piston travel of truck-mounted brake cylinders must be sufficient to provide proper brake shoe clearance when brakes are released. Maximum piston travel must not exceed 6 inches.

(3) Piston travel of brake cylinders on freight cars equipped with other than standard single capacity brake, must be adjusted as indicated on badge plate or stenciling on car located in a conspicuous place near brake cylinder.

(g) When test of airbrakes has been completed the engineman and conductor must be advised that train is in proper condition to proceed.

(h) During standing test, brakes must not be applied or released until proper signal is given.

(i)(1) When train airbrake system is tested from a yard test plant, an engineer's brake valve or a suitable test device must be used to provide increase and reduction of brake pipe air pressure or electropneumatic brake application and release at the same or a slower rate as with engineer's brake valve and yard test plant must be connected to the end which will be nearest to the hauling road locomotive.

(2) When yard test plant is used, the train airbrakes system must be charged and tested as prescribed by paragraphs (c) to (g) of this section inclusive, and when practicable should be kept charged until road motive power is coupled to train, after which, an automatic brake application and release test of airbrakes on rear car must be made. If train is to be operated in electropneumatic brake operation, this test must also be made in electropneumatic brake operation before proceeding.

(3) If after testing the brakes as prescribed in paragraph (i)(2) of this section the train is not kept charged until road motive power is attached, the brakes must be tested as prescribed by paragraph (d)(1) of this section and if train is to be operated in electropneumatic brake operation as prescribed by paragraph (d)(2) of this section.

(j) Before adjusting piston travel or working on brake rigging, cutout cock in brake pipe branch must be closed and air reservoirs must be drained. When cutout cocks are provided in brake cylinder pipes, these cutout cocks only may be closed and air reservoirs need not be drained.

(49 CFR 1.49(c))

[37 FR 12236, June 21, 1972, as amended at 47 FR 36795, Aug. 23, 1982; 47 FR 40807, Sept. 16, 1982]

§232.13 Road train and intermediate terminal train air brake tests.

(a) *Passenger trains.* Before motive power is detached or angle cocks are closed on a passenger train operated in either automatic or electro-pneumatic brake operation, except when closing angle cocks for cutting off one or more cars from the rear end of train, automatic air brake must be applied. After recouping, brake system must be recharged to required air pressure and before proceeding and upon receipt of proper request or signal, application and release tests of brakes on rear car must be made from locomotive in automatic brake operation. If train is to be operated in electro-pneumatic brake operation, this test must also be made in electro-pneumatic brake operation before proceeding. Inspector or trainman must determine if brakes on rear car of train properly apply and release.

(b) *Freight trains.* Before motive power is detached or angle cocks are closed on a freight train, brakes must be applied with not less than a 20-pound brake pipe reduction. After recoupling, and after angle cocks are opened, it must be known that brake pipe air pressure is being restored as indicated by a rear car gauge or device. In the absence of a rear car gauge or device, an air brake test must be made to determine that the brakes on the rear car apply and release.

(c)(1) At a point other than an initial terminal where a locomotive or caboose is changed, or where one or more consecutive cars are cut off from the rear end or head end of a train with the consist otherwise remaining intact, after the train brake system is charged to within 15 pounds of the feed valve setting on the locomotive, but not less than 60 pounds as indicated at the rear of a freight train and 70 pounds on a passenger train, a 20-pound brake pipe reduction must be made and it must be determined that the brakes on the rear car apply and release. As an alternative to the rear car brake application and release test, it shall be determined that brake pipe pressure of the train is being reduced as indicated by a rear car gauge or device and then that brake pipe pressure of the train is being restored as indicated by a rear car gauge or device.

(2) Before proceeding it must be known that brake pipe pressure as indicated at rear of freight train is being restored.

(3) On trains operating with electro-pneumatic brakes, with brake system charged to not less than 70 pounds, test must be made to determine that rear brakes apply and release properly from a minimum 20 pounds electro-pneumatic brake application as indicated by brake cylinder gauge.

(d)(1) At a point other than a terminal where one or more cars are added to a train, after the train brake system is charged to not less than 60 pounds as indicated by a gauge or device at the rear of a freight train and 70 pounds on a passenger train, a brake test must be made to determine that brake pipe leakage does not exceed five (5) pounds per minute as indicated by the brake pipe gauge after a 20-pound brake pipe reduction. After this test is completed, it must be determined that the brakes on each of these cars and on the rear car of the train apply and release. As an alternative to the rear car brake application and release portion of the test, it shall be determined that brake pipe pressure of the train is being reduced as indicated by a rear car gauge or device and then that brake pipe pressure of the train is being restored as indicated by a rear car gauge or device. Cars added to a train that have not been inspected in accordance with §232.12 (c) through (j) must be so inspected and tested at the next terminal where facilities are available for such attention.

(2)(i) At a terminal where a solid block of cars, which has been previously charged and tested as prescribed by §232.13 (c) through (j), is added to a train, it must be determined that the brakes on the rear car of the train apply and release. As an alternative to the rear car application and release test, it shall be determined that brake pipe pressure of the train is being reduced as indicated by a rear car gauge or device and then that brake pipe pressure of the train is

being restored as indicated by a rear car gauge or device.

(ii) When cars which have not been previously charged and tested as prescribed by § 232.12 (c) through (j) are added to a train, such cars may either be given inspection and tests in accordance with § 232.12 (c) through (j), or tested as prescribed by paragraph (d)(1) of this section prior to departure in which case these cars must be inspected and tested in accordance with § 232.12 (c) through (j) at next terminal.

(3) Before proceeding it must be known that the brake pipe pressure at the rear of freight train is being restored.

(e)(1) Transfer train and yard train movements not exceeding 20 miles, must have the air brake hose coupled between all cars, and after the brake system is charged to not less than 60 pounds, a 15 pound service brake pipe reduction must be made to determine that the brakes are applied on each car before releasing and proceeding.

(2) Transfer train and yard train movements exceeding 20 miles must have brake inspection in accordance with § 232.12 (c)–(j).

(f) The automatic air brake must not be depended upon to hold a locomotive, cars or train, when standing on a grade, whether locomotive is attached or detached from cars or train. When required, a sufficient number of hand brakes must be applied to hold train, before air brakes are released. When ready to start, hand brakes must not be released until it is known that the air brake system is properly charged.

(g) As used in this section, *device* means a system of components designed and inspected in accordance with § 232.19.

(h) When a device is used to comply with any test requirement in this section, the phrase *brake pipe pressure of the train is being reduced* means a pressure reduction of at least five pounds and the phrase *brake pipe pressure of the train is being restored* means a pressure increase of at least five pounds.

[33 FR 19679, Dec. 25, 1968, as amended at 37 FR 12237, June 21, 1972; 51 FR 17303, May 9, 1986]

§ 232.14 Inbound brake equipment inspection.

(a) At points where inspectors are employed to make a general inspection of trains upon arrival at terminals, visual inspection must be made of retaining valves and retaining valve pipes, release valves and rods, brake rigging, safety supports, hand brakes, hose and position of angle cocks and make necessary repairs or mark for repair tracks any cars to which yard repairs cannot be promptly made.

(b) Freight trains arriving at terminals where facilities are available and at which special instructions provide for immediate brake inspection and repairs, shall be left with air brakes applied by a service brake pipe reduction of 20 pounds so that inspectors can obtain a proper check of the piston travel. Trainmen will not close any angle cock or cut the locomotive off until the 20 pound service reduction has been made. Inspection of the brakes and needed repairs should be made as soon thereafter as practicable.

§ 232.15 Double heading and helper service.

(a) When more than one locomotive is attached to a train, the engineman of the leading locomotive shall operate the brakes. On all other motive power units in the train the brake pipe cutout cock to the brake valve must be closed, the maximum main reservoir pressure maintained and brake valve handles kept in the prescribed position. In case it becomes necessary for the leading locomotive to give up control of the train short of the destination of the train, a test of the brakes must be made to see that the brakes are operative from the automatic brake valve of the locomotive taking control of the train.

(b) The electro-pneumatic brake valve on all motive power units other than that which is handling the train must be cut out, handle of brake valve kept in the prescribed position, and air compressors kept running if practicable.

§ 232.16 Running tests.

When motive power, engine crew or train crew has been changed, angle

cocks have been closed except for cutting off one or more cars from the rear end of train or electro-pneumatic brake circuit cables between power units and/or cars have been disconnected, running test of train air brakes on passenger train must be made, as soon as speed of train permits, by use of automatic brake if operating in automatic brake operation or by use of electro-pneumatic brake if operating in electro-pneumatic brake operation. Steam or power must not be shut off unless required and running test must be made by applying train air brakes with sufficient force to ascertain whether or not brakes are operating properly. If air brakes do not properly operate, train must be stopped, cause of failure ascertained and corrected and running test repeated.

§ 232.17 Freight and passenger train car brakes.

(a) *Testing and repairing brakes on cars while on shop or repair tracks.* (1) When a freight car having brake equipment due for periodic attention is on shop or repair tracks where facilities are available for making air brake repairs, brake equipment must be given attention in accordance with the requirements of the currently effective AAR Code of Rules for cars in interchange. Brake equipment shall then be tested by use of a single car testing device as prescribed by the currently effective AAR Code of Tests.

(2)(i) When a freight car having an air brake defect is on a shop or repair track, brake equipment must be tested by use of a single car testing device as prescribed by currently effective AAR Code of Tests.

(ii) All freight cars on shop or repair tracks shall be tested to determine that the air brakes apply and release. Piston travel on a standard body mounted brake cylinder which is less than 7 inches or more than 9 inches must be adjusted to nominally 7 inches. Piston travel of brake cylinders on all freight cars equipped with other than standard single capacity brake, must be adjusted as indicated on badge plate or stenciling on car located in a conspicuous place near brake cylinder. After piston travel has been adjusted and with brakes released, sufficient brake shoe clearance must be provided.

(iii) When a car is equipped for use in passenger train service not due for periodical air brake repairs, as indicated by stenciled or recorded cleaning dates, is on shop or repair tracks, brake equipment must be tested by use of single car testing device as prescribed by currently effective AAR Code of Tests. Piston travel of brake cylinders must be adjusted if required, to the standard travel for that type of brake cylinder. After piston travel has been adjusted and with brakes released, sufficient brake shoe clearance must be provided.

(iv) Before a car is released from a shop or repair track, it must be known that brake pipe is securely clamped, angle cocks in proper position with suitable clearance, valves, reservoirs and cylinders tight on supports and supports securely attached to car.

(b)(1) Brake equipment on cars other than passenger cars must be cleaned, repaired, lubricated and tested as often as required to maintain it in a safe and suitable condition for service but not less frequently than as required by currently effective AAR Code of Rules for cars in interchange.

(2) Brake equipment on passenger cars must be clean, repaired, lubricated and tested as often as necessary to maintain it in a safe and suitable condition for service but not less frequently than as required in Standard S–045 in the Manual of Standards and Recommended Practices of the AAR.

(3) Copies of the materials referred to in this section can be obtained from the Association of American Railroads, 1920 L Street, NW., Washington, DC 20036.

(72 Stat. 86 (45 U.S.C. 9); sec. 6 (e), (f), 80 Stat. 939 (49 U.S.C. 1655); and sec. 1.49(c) of the regulations of the Office of the Secretary of Transportation, 49 CFR 1.49(c))

[47 FR 36795, Aug. 23, 1982, as amended at 49 FR 1988, Jan. 17, 1984]

§ 232.19 Design standards for one-way end-of-train devices.

(a) A one-way end-of-train device shall be comprised of a rear-of-train unit (rear unit) located on the last car of a train and a front-of-train unit (front unit) located in the cab of the locomotive controlling the train.

(b) *Rear unit.* The rear unit shall be capable of determining the rear car brake pipe pressure and transmitting that information to the front unit for display to the locomotive engineer. The rear unit shall be—

(1) Capable of measuring the rear car brake pipe pressure with an accuracy of ±3 psig and brake pipe pressure variations of ±1 psig;

(2) Equipped with a ''bleeder valve'' that permits the release of any air under pressure from the rear of train unit or the associated air hoses prior to detaching the rear unit from the brake pipe;

(3) Designed so that an internal failure will not cause an undesired emergency brake application;

(4) Equipped with either an air gauge or a means of visually displaying the rear unit's brake pipe pressure measurement; and

(5) Equipped with a pressure relief safety valve to prevent explosion from a high pressure air leak inside the rear unit.

(c) *Reporting rate.* Multiple data transmissions from the rear unit shall occur immediately after a variation in the rear car brake pipe pressure of ±2 psig and at intervals of not greater than 70 seconds when the rear car brake pipe pressure variation over the 70-second interval is less than ±2 psig.

(d) *Operating environment.* The rear unit shall be designed to meet the performance requirements of paragraphs (b) and (c) of this section under the following environmental conditions:

(1) At temperatures from −40 ° C to 60 ° C;

(2) At a relative humidity of 95% noncondensing at 50 ° C;

(3) At altitudes of zero to 12,000 feet mean sea level;

(4) During vertical and lateral vibrations of 1 to 15 Hz., with 0.5 g. peak to peak, and 15 to 500 Hz., with 5 g. peak to peak;

(5) During the longitudinal vibrations of 1 to 15 Hz., with 3 g. peak to peak, and 15 to 500 Hz., with 5 g. peak to peak; and

(6) During a shock of 10 g. peak for 0.1 second in any axis.

(e) *Unique code.* Each rear unit shall have a unique and permanent identification code that is transmitted along with the pressure message to the front-of-train unit. A code obtained from the Association of American Railroads, 50 F Street, NW., Washington, DC 20036 shall be deemed to be a unique code for purposes of this section. A unique code also may be obtained from the Office of Safety Enforcement (RRS–10), Federal Railroad Administration, Washington, DC 20590.

(f) *Front unit.* (1) The front unit shall be designed to receive data messages from the rear unit and shall be capable of displaying the rear car brake pipe pressure in not more than one-pound increments.

(2) The display shall be clearly visible and legible in daylight and darkness from the engineer's normal operating position.

(3) The front device shall have a means for entry of the unique identification code of the rear unit being used. The front unit shall be designed so that it will display a message only from the rear unit with the same code as entered into the front unit.

(4) The front unit shall be designed to meet the requirements of 232.19(d) (2), (3), (4), and (5). It shall also be designed to meet the performance requirements in this paragraph—

(i) At temperatures from 0° C to 60° C;

(ii) During a vertical or lateral shock of 2 g. peak for 0.1 second; and

(iii) During a longitudinal shock of 5 g. peak for 0.1 second.

(g) *Radio equipment.* (1) The radio transmitter in the rear unit and the radio receiver in the front unit shall comply with the applicable regulatory requirements of the FCC and use of a transmission format acceptable to the FCC.

(2) If power is supplied by one or more batteries, the operating life shall be a minimum of 36 hours at 0° C.

[51 FR 17303, May 9, 1986, as amended at 62 FR 294, Jan. 2, 1997]

§ 232.21 Design and performance standards for two-way end-of-train devices.

Two-way end-of-train devices shall be designed and perform with the features applicable to one-way end-of-train devices described in §232.19, except those included in §232.19(b)(3). In addition, a two-way end-of-train device shall be

designed and perform with the following features:

(a) An emergency brake application command from the front unit of the device shall activate the emergency air valve at the rear of the train within one second.

(b) The rear unit of the device shall send an acknowledgment message to the front unit immediately upon receipt of an emergency brake application command. The front unit shall listen for this acknowledgment and repeat the brake application command if the acknowledgment is not correctly received.

(c) The rear unit, on receipt of a properly coded command, shall open a valve in the brake line and hold it open for a minimum of 15 seconds. This opening of the valve shall cause the brake line to vent to the exterior.

(d) The valve opening and hose shall have a minimum diameter of ¾ inch to effect an emergency brake application.

(e) The front unit shall have a manually operated switch which, when activated, shall initiate an emergency brake transmission command to the rear unit. The switch shall be labeled ''Emergency'' and shall be protected so that there will exist no possibility of accidental activation.

(f) The availability of the front-to-rear communications link shall be checked automatically at least every 10 minutes.

(g) Means shall be provided to confirm the availability and proper functioning of the emergency valve.

(h) Means shall be provided to arm the front and rear units to ensure the rear unit responds to an emergency command only from a properly associated front unit.

[62 FR 294, Jan. 2, 1997]

§232.23 Operations requiring use of two-way end-of-train devices; prohibition on purchase of nonconforming devices.

(a) The following definitions are intended solely for the purpose of identifying those operations subject to the requirements for the use of two-way end-of-train devices.

(1) *Heavy grade* means:

(i) For a train operating with 4,000 trailing tons or less, a section of track with an average grade of two percent or greater over a distance of two continuous miles; and

(ii) For a train operating with greater than 4,000 trailing tons, a section of track with an average grade of one percent or greater over a distance of three continuous miles.

(2) *Train* means one or more locomotives coupled with one or more rail cars, except during switching operations or where the operation is that of classifying cars within a railroad yard for the purpose of making or breaking up trains.

(3) *Local train* means a train assigned to perform switching en route which operates with 4,000 trailing tons or less and travels between a point of origin and a point of final destination, for a distance that is no greater than that which can normally be operated by a single crew in a single tour of duty.

(4) *Work train* means a non-revenue service train of 4,000 trailing tons or less used for the administration and upkeep service of the railroad.

(5) *Trailing tons* means the sum of the gross weights—expressed in tons—of the cars and the locomotives in a train that are not providing propelling power to the train.

(b) All trains not specifically excepted in paragraph (e) of this section shall be equipped with and shall use either a two-way end-of-train device meeting the design and performance requirements contained in §232.21 or a device using an alternative technology to perform the same function.

(c) Each newly manufactured end-of-train device purchased by a railroad after (one year from date of publication) shall be a two-way end-of-train device meeting the design and performance requirements contained in §232.21 or a device using an alternative technology to perform the same function.

(d) Each two-way end-of-train device purchased by any person prior to promulgation of these regulations shall be deemed to meet the design and performance requirements contained in §232.21.

(e) The following types of trains are excepted from the requirement for the use of a two-way end-of-train device:

(1) Trains with a locomotive capable of making an emergency brake application, through a command effected by telemetry or by a crew member in radio contact with the lead (controlling) locomotive, located in the rear third of the train length;

(2) Trains operating in the push mode with the ability to effectuate an emergency brake application from the rear of the train;

(3) Trains with an operational caboose placed at the rear of the train, carrying one or more crew members, that is equipped with an emergency brake valve;

(4) Trains operating with a secondary, fully independent braking system capable of safely stopping the train in the event of failure of the primary system;

(5) Trains that do not operate over heavy grades and do not exceed 30 mph;

(6) Local trains as defined in paragraph (a)(3) of this section that do not operate over heavy grades;

(7) Work trains as defined in paragraph (a)(4) of this section that do not operate over heavy grades;

(8) Trains that operate exclusively on track that is not part of the general railroad system; and

(9) Passenger trains with emergency brakes.

(f) If a train is required to use a two-way end-of-train device:

(1) That device shall be armed and operable from the time a train departs from the point where the device is installed until the train reaches its destination.

(2) The rear unit batteries shall be sufficiently charged at the initial terminal or other point where the device is installed and throughout the train's trip to ensure that the end-of train-device will remain operative until the train reaches its destination.

(g) If a two-way end-of-train device or equivalent device fails en route (i.e., is unable to initiate an emergency brake application from the rear of the train due to certain losses of communication or due to other reasons), the speed of the train on which it is installed shall be limited to 30 mph until the ability of the device to initiate an emergency brake application from the rear of the train is restored. This limitation shall apply to a train using any device that uses an alternative technology to serve the purpose of a two-way end-of-train device. With regard to two-way end-of-train devices, a loss of communication between the front and rear units will be considered an en route failure only if the loss of communication is for a period greater than 16 minutes and 30 seconds.

(1) If a two-way end-of-train device fails en route, the train on which it is installed, in addition to observing the 30-mph speed limitation, shall not operate over a section of track with an average grade of two percent or greater over a distance of two continuous miles, unless one of the following alternative measures is provided:

(i) Use of an occupied helper locomotive at the end of the train. This alternative may be used only if the following requirements are met:

(A) The helper locomotive engineer will initiate and maintain two-way voice radio communication with the engineer on the head end of the train; this contact shall be verified just prior to passing the crest the grade.

(B) If there is a loss of communication prior to passing the crest of the grade, the helper locomotive engineer and the head-end engineer shall act immediately to stop the train until voice communication is resumed, if this can be done safely.

(C) If there is a loss of communication once the descent has begun, the helper locomotive engineer and the head-end engineer shall act to stop the train if the train has reached a predetermined rate of speed that indicates the need for emergency braking.

(D) The brake pipe of the helper locomotive shall be connected and cut into the train line and tested to ensure operation.

(ii) Use of an occupied caboose at the end of the train with a tested, functioning brake valve capable of initiating an emergency brake application from the caboose. This alternative may be used only if the train service employee in the caboose and the engineer on the head end of the train establish and maintain two-way voice radio communication and respond appropriately to the loss of such communication in the same manner as prescribed for

helper locomotives in paragraph (g)(1)(i) of this section.

(iii) Use of a radio-controlled locomotive in the rear third of the train under continuous control of the engineer in the head end by means of telemetry, but only if such radio-controlled locomotive is capable of initiating an emergency application on command from the lead (controlling) locomotive.

[62 FR 294, Jan. 2, 1997]

§ 232.25 Inspection and testing of end-of-train devices.

(a) After each installation of either the front or rear unit of an end-of-train device, or both, on a train and before the train departs, the railroad shall determine that the identification code entered into the front unit is identical to the unique identification code on the rear-of-train unit.

(b) After each installation of either the front or rear unit of an end-of-train device, or both, the functional capability of the device shall be determined, after charging the train, by comparing the quantitative value displayed on the front unit with the quantitative value displayed on the rear unit or on a properly calibrated air gauge. The end-of-train device shall not be used if the difference between the two readings exceeds three pounds per square inch.

(c) A two-way end-of-train device shall be tested at the initial terminal or other point of installation to ensure that the device is capable of initiating an emergency power brake application from the rear of the train. If this test is conducted by a person other than a member of the train crew, the locomotive engineer shall be informed that the test was performed.

(d) The telemetry equipment shall be calibrated for accuracy according to the manufacturer's specifications at least every 365 days. The date of the last calibration, the location where the calibration was made, and the name of the person doing the calibration shall be legibly displayed on a weather-resistant sticker or other marking device affixed to the outside of both the front unit and the rear unit.

[62 FR 295, Jan. 2, 1997]

APPENDIX A TO PART 232—SCHEDULE OF CIVIL PENALTIES [1]

Section	Violation	Willful violation
232.1 Power brakes, minimum percentage	$5,000	$7,000
232.2 Drawbars; standard height	2,500	5,000
232.3 Power brakes and appliances for operating power brake systems	2,500	5,000
Rules for Inspection, Testing and Maintenance of Air Brake Equipment:		
232.10 General rules—locomotives:		
(b) Air brake equipment not inspected or tested to assure it is in a safe and suitable condition	2,500	5,000
(c) Compressor not tested for capacity	2,500	5,000
(d) Main reservoir not tested	2,500	5,000
(e) Air gauges not tested; if inaccurate not repaired or replaced	2,500	5,000
(f)(1) Operating portion of air brake equipment, dirt collectors, and filters not cleaned, repaired, and tested	2,500	5,000
(2) Hand brakes, parts and connections not inspected or suitably stenciled	1,000	2,000
(g) Date of testing or cleaning of air brake equipment not displayed in the cab	1,000	2,000
(h)(1) Minimum brake cylinder piston travel insufficient	2,500	5,000
(2) Maximum brake cylinder piston travel excessive	2,500	5,000
(i)(1) Foundation brake rigging, safety supports and brake shoes	2,500	5,000
(2) Foundation brake rigging or safety supports have improper clearance to the rails	2,500	5,000
(j)(1) Main reservoir leakage	2,500	5,000
(2) Brake pipe leakage	2,500	5,000
(3) Brake cylinder leakage	2,500	5,000
(4) Main reservoir safety valve	2,500	5,000
(5) Governor	2,500	5,000
(6) Compressor governor when used in connection with automatic air brake system	2,500	5,000
(k) Communicating signal system on locomotive	1,000	2,000
(l) Enginemen taking charge of locomotive	2,500	5,000
(m) Drain cocks on air compressors of steam locomotives	2,500	5,000
(n) Air pressure regulating devices	2,500	5,000

APPENDIX A TO PART 232—SCHEDULE OF CIVIL PENALTIES [1]—Continued

Section	Violation	Willful violation
232.11 Train air brake system tests:		
(b) Communicating signal system on passenger train	2,500	5,000
(c) Effective and operative air brakes	2,500	5,000
(d) Condensation from yard line or motive power	2,500	5,000
232.12 Initial terminal road train air brake tests:		
(a) Total failure to perform initial terminal test	10,000	(1)
(b) 1,000 mile inspection not performed	5,000	10,000
(c)–(j) partial failure to perform initial terminal test	2,500	5,000
232.13 Road train and intermediate terminal train air brake tests:		
(a) Passenger trains: locomotive is detached	5,000	7,500
(b) Freight trains: locomotive is detached	5,000	7,500
(c)(1) Locomotive or caboose is changed, or one or more cars are cut off from the rear end or head end	5,000	7,500
(2) Brake pipe pressure restored	5,000	7,500
(3) Electropneumatic application and release test	5,000	7,500
(d)(1) Cars are added at a point other than a terminal	5,000	7,500
(2)(i) Cars added at a terminal and have not been charged and tested	5,000	7,500
(ii) Cars added at a terminal and have not been charged and tested	5,000	7,500
(3) Brake pipe pressure restored at the rear of freight train	5,000	7,500
(e)(1) Transfer train and yard train movements	2,500	5,000
(2) Transfer train and yard train movements exceeding 20 miles	5,000	7,500
(f) Locomotives, cars or train standing on a yard	5,000	7,500
(h) Device is used to comply with test requirement	2,500	5,000
232.14 Inbound brake equipment inspection:		
(a) Inspection of trains upon arrival at terminals	1,000	2,000
(b) Special instructions provide for immediate brake inspection and repairs	1,000	2,000
232.15 Double heading and helper service:		
(a) Engineman of the leading locomotive shall operate the brakes	5,000	7,500
(b) Electropneumatic brake valve	5,000	7,500
232.16 Running tests	2,500	5,000

APPENDIX A TO PART 232—SCHEDULE OF CIVIL PENALTIES [1]—Continued

Section	Violation	Willful violation
232.17 Freight and passenger train car brakes:		
(a) Testing and repairing brakes on cars while in shop or on repair track:		
(1) Periodic attention on freight car air brake equipment while car is on repair track	5,000	7,500
(2)(i) Single car testing of freight cars	2,500	5,000
(ii) Repair track tests of freight cars	2,500	5,000
(iii) Single car testing of freight cars	2,500	5,000
(iv) Car is released from a shop or repair track	2,500	5,000
(b)(1) Brake equipment on cars other than passenger cars	2,500	5,000
(2) Brake equipment on passenger cars	4,000	6,000
232.19 End of train device:		
(a) Location of front unit and rear unit	2,500	5,000
(b) Rear unit	2,500	5,000
(c) Reporting rate	2,500	5,000
(d) Operating environment	2,500	5,000
(e) Unique code	2,500	5,000
(f) Front unit	2,500	5,000
(g) Radio equipment	2,500	5,000
232.21 Two-way EOTs:		
(a)-(h) Design Standards	2,500	5,000
232.23 Operating Standards:		
(b) Failure to equip	5,000	7,500
(c) Purchases	2,500	5,000
(f)(1) Device not armed or operable	5,000	7,500
(2) Insufficient battery charge	2,500	5,000
(g) En route failures	5,000	7,500
232.25 Inspection and Testing:		
(a) Unique code	2,500	5,000
(b) Comparing values	2,500	5,000
(c) Test of emergency capability	5,000	7,500
(d) Calibration	2,500	5,000

[1] A penalty may be assessed against an individual only for a willful violation. The Administrator reserves the right to assess a penalty of up to $20,000 for any violation where circumstances warrant. See 49 CFR part 209, appendix A.

[53 FR 52934, Dec. 29, 1988, as amended at 62 FR 295, Jan. 2, 1997]

APPENDIX B TO PART 232—SPECIFICATIONS AND REQUIREMENTS FOR POWER BRAKES AND APPLIANCES FOR OPERATING POWER-BRAKE SYSTEMS FOR FREIGHT SERVICE

PURPOSE

The purpose of this specification is to define and prescribe requirements for power brakes and appliances for operating powerbrake systems.

DEFINITIONS

For purposes of this specification, terms used herein are defined as follows:

1. *Power brake.* A combination of parts operated by compressed air and controlled manually, pneumatically or electrically, by means of which the motion of a car or locomotive is retarded or arrested.

2. *Power-brake system.* The power brakes on locomotives and cars of a train so interconnected that they can be operated together and by means of which the motion of the train is retarded or arrested.

3. *Brake valve.* The value of the locomotive equipment by means of which operation of the power-brake system is controlled.

4. *Equalizing reservoir.* The small reservoir connected to the brake valve only, the pressure of which is reduced by the engineer for making service applications.

5. *Brake pipe.* The line of pipe and hose extending throughout the length of the train by means of which compressed air is supplied to the brake devices on the several cars and the pressures so controlled as to effect the application and release of the brakes.

6. *Operating valve.* Device on each car, the operation of which result in (a) admission of air to brake cylinder, (b) release of air from brake cylinder, and (c) charging of one or more reservoirs.

7. *Service reduction.* A decrease in brake-pipe pressure, usually of from 5 to 25 pounds, at a rate sufficiently rapid to move the operating valve to service position, but at a rate not rapid enough to operate the valve to emergency position. Quick service is that feature of the operating valve which provides for local reduction of brake-pipe pressure.

8. *Service application.* A brake application which results from one or more service reductions.

9. *Full service reduction.* A service reduction sufficient in amount to cause equalization of pressure in brake cylinder with pressure in the reservoir from which compressed air is supplied to brake cylinder.

10. *Full service application.* A brake application which results from one or more brake-pipe reductions sufficient in amount to cause a full service reduction.

11. *Emergency reduction.* A depletion of brake-pipe pressure at a rate sufficiently rapid to move the operating valve to emergency position.

12. *Emergency application.* A brake application which results from an emergency reduction.

13. *Emergency brake-cylinder pressure.* The force per square inch exerted upon piston in brake cylinder by compressed air which is admitted to brake cylinder as a result of an emergency reduction. Effective emergency brake-cylinder pressure is a pressure not less than 15 percent nor more than 20 percent greater than the brake-cylinder pressure obtained from a full service reduction on the game car and from the same initial pressures.

SPECIFICATIONS

General Requirements

14. The design of the operating valve shall be such as will insure efficient and reliable operation, both in its application and release functions and when intermingled with other types of power brakes. It shall be so constructed that the rate of brake-cylinder pressure development may be adjusted to meet such changes in train operating conditions as may develop in the future.

15. The design of the service and emergency valves shall be such as to permit their removal for cleaning and repair without disturbing pipe joints.

16. The portions of the car brake which control the brake application and release, and also the brake cylinder, shall be adequately protected against the entrance of foreign matter.

17. The apparatus conforming to the requirements of these specifications shall be so constructed, installed and maintained as to be safe and suitable for service.

Service Requirements

The apparatus shall be so designed and constructed that: (based upon 70 pounds brake-pipe pressure and train length of 150 cars)

18. With a service reduction of 5 pounds in the equalizing reservoir at the brake valve all brakes will apply.

19. An initial 5-pound equalizing-reservoir reduction at the brake valve will produce substantially 10 pounds brake-cylinder pressure throughout the train, including brakes having piston travel in excess of 8 inches.

20. With an equalizing-reservoir reduction of 10 pounds, the difference in time of obtaining substantially 10 pounds pressure in the brake cylinder of the first and one hundred and fiftieth brakes will be nominally 20 seconds or less.

21. A brake-pipe reduction of 10 pounds will result in pressure in each brake cylinder of not less than 15 pounds nor more than 25 pounds.

22. A total brake-pipe reduction of 25 pounds will result in equalization of brakecylinder pressure with pressure in the reservoir from which compressed air is supplied to the brake cylinder, and brake-cylinder pressure of not less than 48 pounds nor more than 52 pounds will be obtained.

23. Quick service activity of the train brakes will cease when the initial quick service action has been completed.

24. The quick service feature of the brake will produce substantially uniform time of quick service transmission regardless of the

unavoidable variations in frictional resistance of the parts.

25. The brake will so function as to prevent a degree of wave action in brake-pipe pressure sufficient to cause undesired release of any brake while the brakes are being applied.

26. The degree of stability will be sufficient to prevent undesired service application occurring as a result of unavoidable minor fluctuations of brake-pipe pressure.

27. The brake-cylinder pressure increase resulting from quick service operation will be less when the brake is reapplied with pressure retained in the brake cylinder than with applications made when the brake-cylinder pressure is zero.

28. Undesired quick action will not result with any rate of change in brake-pipe pressure which may occur during service application or release of the brake.

29. In the normal release of train brakes, individual car brake will not start recharging from the brake pipe until brake-pipe pressure has increased sufficiently to have accomplished the release of adjacent valves.

30. The recharge of auxiliary reservoirs in the forward portion of the train will be automatically retarded while full release position of the brake valve is being used to initiate the release of train brakes.

31. After a 15-pound service reduction has been made and brake-valve exhaust has closed, in a release operation in which brake valve is moved to release position and after 15 seconds is moved to running position, air operating valves will move to release position within 40 seconds after brake valve is placed in release position.

32. After a 15-pound service reduction has been made and brake-value exhaust has closed, in a release operation in which brake valve is moved to release position and after 15 seconds is moved to running position, brake-pipe pressure at car 150 will be increased 5 pounds within 1½ minutes after brake valve is placed in release position.

33. The rate of release of pressure from the brake cylinder will be nominally 23 seconds from 50 pounds to 5 pounds.

Emergency Requirements

The apparatus shall be so designed and constructed that: (based on 70 pounds brake-pipe pressure and train length of 150 cars).

34. Emergency application operation will always be available irrespective of the existing state or stage or brake application or release.

35. Emergency application initiated during a release of previous brake application will produce a material increase in brake-cylinder pressure over that which would result from a full service application made under the same conditions.

36. When operating valve acts in emergency it will so function as to develop nominally 15 pounds brake-cylinder pressure in not more than 1½ seconds and maximum pressure in nominally 10 seconds.

37. With an emergency reduction of brake-pipe pressure all brakes, including the one hundred and fiftieth, will start to apply within 8.2 seconds and develop not less than 15 percent nor more than 20 percent in excess of 50 pounds brake-cylinder pressure within 18.2 seconds from the movement of the brake valve to emergency position.

38. The operating valve will so function that, when an emergency application is made subsequent to a service application which has produced not less than 30 pounds brake-cylinder pressure, the maximum brake-cylinder pressure will be attained in nominally 4 seconds from the beginning of the emergency action of the valve.

39. Emergency application will produce from a charged system between 15 and 20 percent increase in brake-cylinder pressure over that which results from a full service application and irrespective of any degree of prior service application.

40. With any group of three consecutive brakes cut out, an emergency reduction made with the brake valve will cause the remainder of the brakes to operate in emergency and produce normal emergency pressures in the same time as when all brakes are cut in.

41. The brake will so function as to accomplish the release of an emergency application with the same degree of certainty secured in the release of service applications.

42. When releasing brakes following an emergency application, each brake will so function as to decrease the auxiliary-reservoir pressure prior to the actual release.

43. Both service and emergency brake applications will be released when the brake-pipe pressure is increased to not more than 1¾ pounds above that of the auxiliary reservoir and irrespective of the increased frictional resistance to release movement of the piston and slide valves after a period of operation in train service.

NOTE: Order 13528, as amended, 17 FR 8653, Sept. 30, 1952, provides as follows: That said order of September 21, 1945, as amended, be, and it is hereby, further amended so as to require that all said non-interchange cars that may be used in transporting revenue freight and all cabooses shall be so equipped on or before December 31, 1953, and that all other said non-interchange cars shall be so equipped on or before December 31, 1954.

Order 13528 was further amended, 17 FR 8957, Oct. 7, 1952, as follows: That the order heretofore entered herein on September 21, 1945, as amended, requiring respondents to install power brakes and appliances on their cars used in freight service be, and it is hereby, further amended so as not to require the installation of such brakes and appliances on

cars that are used exclusively in switching operations and are not used in train movements within the meaning of the Safety Appliance Acts (45 U. S. C., secs. 1 to 16, inclusive).

Order 13528 was further amended, 17 FR 10738, Nov. 26, 1952, as follows: That the order heretofore entered on September 21, 1945, as amended, requiring respondents to install power brakes and appliances on their cars used in interchange freight service on or before December 31, 1952, be, and it is hereby, further amended so as—

To require that all such interchange cars be so equipped on or before June 30, 1953, except as indicated hereinafter:

To prohibit the movement by any respondent after June 30, 1953, of any car interchange service, other than tank cars (including the cars of private carline companies), not so equipped except that such cars may be so moved prior to October 1, 1953, if routed to owner; and

To prohibit the movement by respondents after October 1, 1953, of any tank car in interchange service (including the tank cars of private car-line companies) not so equipped except that such tank cars may be so moved prior to January 1, 1954, if routed to owner.

That the term *interchange service* means the movement of any car that is engaged in freight service, irrespective of ownership, that is interchanged between or among two or more respondent railroads.

Order 13528 was further amended, 18 FR 6942, Nov. 3, 1953, as follows: That the order heretofore entered herein on September 21, 1945, as amended, requiring respondents to install power brakes and appliances on their cars used in freight service be, and it is hereby, further amended so as not to require the installation of such brakes and appliances on

a. Locomotives;

b. Scale test weight cars;

c. Locomotive cranes, steam shovels, pile drivers and similar construction and maintenance machines built prior to September 21, 1945;

d. Export, industrial, and other than railroad owned cars which are not to be used in service by respondents, except for movement as shipments on their own wheels to given destinations, provided that any such car so moved shall be properly identified by a card attached to each side of car, signed by shipper, stating that such movement is being made under authority of this order; and

e. Industrial and other than railroad owned cars which are not to be used in service by respondents except for movement within the limits of a single switching district.

And, that the effective date of said order of September 21, 1945, as amended, be, and it is hereby, extended until further order of the FRA, insofar as it applies to:

f. Narrow-gauge cars, and

g. Cars being returned from Canada or Mexico to owners in the United States, provided each such car being returned is routed directly to owner and is properly identified by a card attached to each side of car, signed by shipper, stating that the movement is being made under authority of this order.

[33 FR 19679, Dec. 25, 1968, as amended at 53 FR 28602, July 28, 1988]

PART 233—SIGNAL SYSTEMS REPORTING REQUIREMENTS

Sec.
233.1 Scope.
233.3 Application.
233.5 Accidents resulting from signal failure.
233.7 Signal failure reports.
233.9 Reports.
233.11 Civil penalty.
233.13 Criminal penalty.
APPENDIX A TO PART 233—SCHEDULE OF CIVIL PENALTIES

AUTHORITY: 49 App. U.S.C. 26, as amended; 49 App. U.S.C. 1655(e), as amended; 45 U.S.C. 431, 437, and 438, as amended; Pub. L. 100–342; and 49 CFR 1.49 (f), (g), and (m).

SOURCE: 49 FR 3379, Jan. 26, 1984, unless otherwise noted.

§ 233.1 Scope.

This part prescribed reporting requirements with respect to methods of train operation, block signal systems, interlockings, traffic control systems, automatic train stop, train control, and cab signal systems, or other similar appliances, methods, and systems.

§ 233.3 Application.

(a) Except as provided in paragraph (b) of this section, this part applies to railroads that operate on standard gage track which is part of the general railroad system of transportation.

(b) This part does not apply to rail rapid transit operations conducted over track that is used exclusively for that purpose and that is not part of the general system of railroad transportation.

§ 233.5 Accidents resulting from signal failure.

Each carrier shall report within 24 hours to the Federal Railroad Administration by toll free telephone, number 800–424–0201, whenever it learns of the occurrence of an accident/incident arising from the failure of an appliance,

device, method or system to function or indicate as required by part 236 of this title that results in a more favorable aspect than intended or other condition hazardous to the movement of a train.

EFFECTIVE DATE NOTE: At 49 FR 3379, Jan. 26, 1984, Part 233 was revised. This section contains information collection and recordkeeping requirements and will not become effective until approval has been given by the Office of Management and Budget.

§ 233.7 Signal failure reports.

Each carrier shall report within 15 days each failure of an appliance, device, method, or system to function or indicate as required by part 236 of this title that results in a more favorable aspect than intended or other condition hazardous to the movement of a train. Form FRA F6180–14, ''Signal Failure Report,'' shall be used for this purpose and completed in accordance with instructions printed on the form.

(Approved by the Office of Management and Budget under control number 2130–0007)

§ 233.9 Reports.

Not later than April 1, 1997 and every 5 years thereafter, each carrier shall file with FRA a signal system status report ''Signal System Five-year Report'' on a form to be provided by FRA in accordance with instructions and definitions provided on the report.

[61 FR 33872, July 1, 1996]

§ 233.11 Civil penalty.

Any person (including a railroad and any manager, supervisor, official, or other employee or agent of a railroad) who violates any requirement of this part or causes the violation of any such requirement is subject to a civil penalty of $2,500 except that: Penalties may be assessed against individuals only for willful violations, and where a grossly negligent violation or a pattern of repeated violations has created an imminent hazard of death or injury to persons, or has caused death or injury, a penalty not to exceed $20,000 per violation may be assessed. Each day a violation continues shall constitute a separate offense. See appendix A to this part for a statement of agency civil penalty policy.

[53 FR 28602, July 28, 1988, as amended at 53 FR 52936, Dec. 29, 1988]

§ 233.13 Criminal penalty.

Whoever knowingly and willfully—

(a) Makes, causes to be made, or participates in the making of a false entry in reports required to be filed by this part; or

(b) Files a false report or other document required to be filed by this part is subject to a $5,000 fine and 2 years imprisonment as prescribed by 49 U.S.C. 522(a) and section 209(e) of the Federal Railroad Safety Act of 1970, as amended (45 U.S.C. 438(e)).

APPENDIX A TO PART 233—SCHEDULE OF CIVIL PENALTIES[1]

Section	Violation	Willful violation
233.5 Accidents resulting from signal failure	$2,500	$5,000
233.7 Signal failure reports	5,000	7,500
233.9 Annual reports	1,000	2,000

[1] A penalty may be assessed against an individual only for a willful violation. The Administrator reserves the right to assess a penalty of up to $20,000 for any violation where circumstances warrant. See 49 CFR part 209, appendix A.

[53 FR 52936, Dec. 29, 1988]

PART 234—GRADE CROSSING SIGNAL SYSTEM SAFETY

Subpart A—General

Sec.
234.1 Scope.
234.3 Application.
234.4 Preemptive effect.
234.5 Definitions.
234.6 Penalties.

Subpart B—Reports

234.7 Accidents involving grade crossing signal failure.
234.9 Grade crossing signal system failure reports.

Subpart C— Response to Reports of Warning System Malfunction

234.101 Employee notification rules.
234.103 Timely response to report of malfunction.
234.105 Activation failure.
234.106 Partial activation.
234.107 False activation.
234.109 Recordkeeping.

Subpart D—Maintenance, Inspection, and Testing

MAINTENANCE STANDARDS

234.201 Location of plans.
234.203 Control circuits.
234.205 Operating characteristics of warning system apparatus.
234.207 Adjustment, repair, or replacement of component.
234.209 Interference with normal functioning of system.
234.211 Security of warning system apparatus.
234.213 Grounds.
234.215 Standby power system.
234.217 Flashing light units.
234.219 Gate arm lights and light cable.
234.221 Lamp voltage.
234.223 Gate arm.
234.225 Activation of warning system.
234.227 Train detection apparatus.
234.229 Shunting sensitivity.
234.231 Fouling wires.
234.233 Rail joints.
234.235 Insulated rail joints.
234.237 Reverse switch cut-out circuit.
234.239 Tagging of wires and interference of wires or tags with signal apparatus.
234.241 Protection of insulated wire; splice in underground wire.
234.243 Wire on pole line and aerial cable.
234.245 Signs.

INSPECTIONS AND TESTS

234.247 Purpose of inspections and tests; removal from service of relay or device failing to meet test requirements.
234.249 Ground tests.
234.251 Standby power.
234.253 Flashing light units and lamp voltage.
234.255 Gate arm and gate mechanism.
234.257 Warning system operation.
234.259 Warning time.
234.261 Highway traffic signal pre-emption.
234.263 Relays.
234.265 Timing relays and timing devices.
234.267 Insulation resistance tests, wires in trunking and cables.
234.269 Cut-out circuits.
234.271 Insulated rail joints, bond wires, and track connections.
234.273 Results of inspections and tests.

APPENDIX A TO PART 234—SCHEDULE OF CIVIL PENALTIES

APPENDIX B TO PART 234—ALTERNATE METHODS OF PROTECTION UNDER 49 CFR 234.105(C), 234.106, AND 234.107(C).

AUTHORITY: 49 U.S.C.20103, 20107, 20108, 20111, 20112, 20114, 21301, 21302, 21304, and 21311 (formerly Secs. 202, 208, and 209 of the Federal Railroad Safety Act of 1970, as amended (45 U.S.C. 431, 437, and 438, as amended)); 49 U.S.C.20901 and 20102 (formerly the Accident Reports Act); 45 U.S.C. 38 and 42; and 49 CFR 1.49(f), (g), and (m).

SOURCE: 61 FR 31806, June 20, 1996, unless otherwise noted.

Subpart A—General

§234.1 Scope.

This part imposes minimum maintenance, inspection, and testing standards for highway-rail grade crossing warning systems. This part also prescribes standards for the reporting of failures of such systems and prescribes minimum actions railroads must take when such warning systems malfunction. This part does not restrict a railroad from adopting and enforcing additional or more stringent requirements not inconsistent with this part.

§234.3 Application.

This part applies to all railroads except:

(a) A railroad that exclusively operates freight trains only on track which is not part of the general railroad system of transportation;

(b) Rapid transit operations within an urban area that are not connected to the general railroad system of transportation; and

(c) A railroad that operates passenger trains only on track inside an installation that is insular; i.e., its operations are limited to a separate enclave in such a way that there is no reasonable expectation that the safety of the public—except a business guest, a licensee of the railroad or an affiliated entity, or a trespasser—would be affected by the operation. An operation will not be considered insular if one or more of the following exists on its line:

(1) A public highway-rail crossing that is in use;

(2) An at-grade rail crossing that is in use;

(3) A bridge over a public road or waters used for commercial navigation; or

(4) A common corridor with a railroad, i.e., its operations are within 30 feet of those of any railroad.

§234.4 Preemptive effect.

Under 49 U.S.C. 20106 (formerly §205 of the Federal Railroad Safety Act of 1970 (45 U.S.C. 434)), issuance of these regulations preempts any State law,

rule, regulation, order, or standard covering the same subject matter, except a provision directed at an essentially local safety hazard that is consistent with this part and that does not impose an undue burden on interstate commerce.

§ 234.5 Definitions.

As used in this part:

Activation failure means the failure of an active highway-rail grade crossing warning system to indicate the approach of a train at least 20 seconds prior to the train's arrival at the crossing, or to indicate the presence of a train occupying the crossing, unless the crossing is provided with an alternative means of active warning to highway users of approaching trains. (This failure indicates to the motorist that it is safe to proceed across the railroad tracks when, in fact, it is not safe to do so.) A grade crossing signal system does not indicate the approach of a train within the meaning of this paragraph if—more than 50% of the flashing lights (not gate arm lights) on any approach lane to the crossing are not functioning as intended, or in the case of an approach lane for which two or more pairs of flashing lights are provided, there is not at least one flashing light pair operating as intended. Back lights on the far side of the crossing are not considered in making these determinations.

Appropriately equipped flagger means a person other than a train crewmember who is equipped with a vest, shirt, or jacket of a color appropriate for daytime flagging such as orange, yellow, strong yellow green or fluorescent versions of these colors or other generally accepted high visibility colors. For nighttime flagging, similar outside garments shall be retro reflective. Acceptable hand signal devices for daytime flagging include '' STOP/SLOW'' paddles or red flags. For nighttime flagging, a flashlight, lantern, or other lighted signal shall be used. Inasmuch as Part VI of the Federal Highway Administration's Manual on Uniform Traffic Control Devices addresses standards and guides for flaggers and flagging equipment for highway traffic control, FRA recommends that railroads be aware of the standards and follow them to the greatest extent possible. Copies of the latest MUTCD provisions regarding flagging will be available from FRA, as well as FHWA, as changes are made in this area.

Credible report of system malfunction means specific information regarding a malfunction at an identified highway-rail crossing, supplied by a railroad employee, law enforcement officer, highway traffic official, or other employee of a public agency acting in an official capacity.

False activation means the activation of a highway-rail grade crossing warning system caused by a condition that requires correction or repair of the grade crossing warning system. (This failure indicates to the motorist that it is not safe to cross the railroad tracks when, in fact, it is safe to do so.)

Highway-rail grade crossing means a location where a public highway, road, street, or private roadway, including associated sidewalks and pathways, crosses one or more railroad tracks at grade.

Partial activation means activation of a highway-rail grade crossing warning system indicating the approach of a train, however, the full intended warning is not provided due to one of the following conditions:

(1) At non-gated crossings equipped with one pair of lights designed to flash alternately, one of the two lights does not operate properly (and approaching motorists can not clearly see flashing back lights from the warning lights on the other side of the crossing);

(2) At gated crossings, the gate arm is not in a horizontal position; or

(3) At gated crossings, any portion of a gate arm is missing if that portion normally had a gate arm flashing light attached.

Train means one or more locomotives, with or without cars.

Warning system malfunction means an activation failure, a partial activation, or a false activation of a highway-rail grade crossing warning system.

§ 234.6 Penalties.

(a) *Civil penalty*. Any person (including but not limited to a railroad; any manager, supervisor, official, or other employee or agent of a railroad; any owner, manufacturer, lessor, or lessee

of railroad equipment, track, or facilities; any employee of such owner, manufacturer, lessor, lessee, or independent contractor) who violates any requirement of this part or causes the violation of any such requirement is subject to a civil penalty of at least $500, but not more than $10,000 per violation, except that: penalties may be assessed against individuals only for willful violations, and where a grossly negligent violation or a pattern of repeated violations has created an imminent hazard of death or injury to persons, or has caused death or injury, a penalty not to exceed $20,000 per violation may be assessed. Each day a violation continues shall constitute a separate offense. Appendix A to this part contains a schedule of civil penalty amounts used in connection with this rule. The railroad is not responsible for compliance with respect to any condition inconsistent with the technical standards set forth in this part where such variance arises as a result of actions beyond the control of the railroad and the railroad could not have prevented the variance through the exercise of due diligence. The foregoing sentence does not excuse any instance of noncompliance resulting from the actions of the railroad's employees, agents, or contractors.

(b) *Criminal penalty*. Whoever knowingly and willfully makes, causes to be made, or participates in the making of a false entry in reports required to be filed by this part, or files a false report or other document required to be filed by this part is subject to a $5,000 fine and 2 years imprisonment as prescribed by 49 U.S.C. 522(a) and section 209(e) of the Federal Railroad Safety Act of 1970, as amended (45 U.S.C. 438(e)).

Subpart B—Reports

§ 234.7 Accidents involving grade crossing signal failure.

(a) Each railroad shall report to FRA every impact between on-track railroad equipment and an automobile, bus, truck, motorcycle, bicycle, farm vehicle, or pedestrian at a highway-rail grade crossing involving an activation failure. Notification shall be provided to the National Response Center within 24 hours of occurrence at (800) 424–0201. Complete reports shall thereafter be filed with FRA pursuant to § 234.9 of this part (activation failure report) and 49 CFR 225.11 (accident/ incident report).

(b) Each telephone report must state the:

(1) Name of the railroad;

(2) Name, title, and telephone number of the individual making the report;

(3) Time, date, and location of accident;

(4) U. S. DOT-AAR Grade Crossing Identification Number;

(5) Circumstances of the accident, including operating details of the grade crossing warning device;

(6) Number of persons killed or injured, if any;

(7) Maximum authorized train speed; and

(8) Posted highway speed limit, if known.

§ 234.9 Grade crossing signal system failure reports.

Each railroad shall report to FRA within 15 days each activation failure of a highway-rail grade crossing warning system. FRA Form No. 6180–83, ''Highway-Rail Grade Crossing Warning System Failure Report,'' shall be used for this purpose and completed in accordance with instructions printed on the form.

Subpart C—Response to Reports of Warning System Malfunction

§ 234.101 Employee notification rules.

Each railroad shall issue rules requiring its employees to report to persons designated by that railroad, by the quickest means available, any warning system malfunction.

§ 234.103 Timely response to report of malfunction.

(a) Upon receipt of a credible report of a warning system malfunction, a railroad having maintenance responsibility for the warning system shall promptly investigate the report and determine the nature of the malfunction. The railroad shall take appropriate action as required by § 234.207.

(b) Until repair or correction of the warning system is completed, the railroad shall provide alternative means of warning highway traffic and railroad employees in accordance with §§ 234.105, 234.106 or 234.107 of this part.

(c) Nothing in this subpart requires repair of a warning system, if, acting in accordance with applicable State law, the railroad proceeds to discontinue or dismantle the warning system. However, until repair, correction, discontinuance, or dismantling of the warning system is completed, the railroad shall comply with this subpart to ensure the safety of the traveling public and railroad employees.

§ 234.105 Activation failure.

Upon receipt of a credible report of warning system malfunction involving an activation failure, a railroad having maintenance responsibility for the warning system shall promptly initiate efforts to warn highway users and railroad employees at the subject crossing by taking the following actions:

(a) Prior to any train's arrival at the crossing, notify the train crew of the report of activation failure and notify any other railroads operating over the crossing;

(b) Notify the law enforcement agency having jurisdiction over the crossing, or railroad police capable of responding and controlling vehicular traffic; and

(c) Provide for alternative means of actively warning highway users of approaching trains, consistent with the following requirements (see appendix B for a summary chart of alternative means of warning):

(1)(i) If an appropriately equipped flagger provides warning for each direction of highway traffic, trains may proceed through the crossing at normal speed.

(ii) If at least one uniformed law enforcement officer (including a railroad police officer) provides warning to highway traffic at the crossing, trains may proceed through the crossing at normal speed.

(2) If an appropriately equipped flagger provides warning for highway traffic, but there is not at least one flagger providing warning for each direction of highway traffic, trains may proceed with caution through the crossing at a speed not exceeding 15 miles per hour. Normal speed may be resumed after the locomotive has passed through the crossing.

(3) If there is not an appropriately equipped flagger or uniformed law enforcement officer providing warning to highway traffic at the crossing, each train must stop before entering the crossing and permit a crewmember to dismount to flag highway traffic to a stop. The locomotive may then proceed through the crossing, and the flagging crewmember may reboard the locomotive before the remainder of the train proceeds through the crossing.

(d) A locomotive's audible warning device shall be activated in accordance with railroad rules regarding the approach to a grade crossing.

§ 234.106 Partial activation.

Upon receipt of a credible report of a partial activation, a railroad having maintenance responsibility for the warning system shall promptly initiate efforts to warn highway users and railroad employees at the subject crossing in the same manner as required for false activations (§ 234.107).

§ 234.107 False activation.

Upon receipt of a credible report of a false activation, a railroad having maintenance responsibility for the highway-rail grade crossing warning system shall promptly initiate efforts to warn highway users and railroad employees at the crossing by taking the following actions:

(a) Prior to a train's arrival at the crossing, notify the train crew of the report of false activation and notify any other railroads operating over the crossing;

(b) Notify the law enforcement agency having jurisdiction over the crossing, or railroad police capable of responding and controlling vehicular traffic; and

(c) Provide for alternative means of actively warning highway users of approaching trains, consistent with the following requirements (see Appendix B for a summary chart of alternative means of warning).

(1)(i) If an appropriately equipped flagger is providing warning for each

direction of highway traffic, trains may proceed through the crossing at normal speed.

(ii) If at least one uniformed law enforcement officer (including a railroad police officer) provides warning to highway traffic at the crossing, trains may proceed through the crossing at normal speed.

(2) If there is not an appropriately equipped flagger providing warning for each direction of highway traffic, or if there is not at least one uniformed law enforcement officer providing warning, trains with the locomotive or cab car leading, may proceed with caution through the crossing at a speed not exceeding 15 miles per hour. Normal speed may be resumed after the locomotive has passed through the crossing. In the case of a shoving move, a crewmember shall be on the ground to flag the train through the crossing.

(3) In lieu of complying with paragraphs (c) (1) or (2) of this section, a railroad may temporarily take the warning system out of service if the railroad complies with all requirements of §234.105, ''Activation failure.''

(d) A locomotive's audible warning device shall be activated in accordance with railroad rules regarding the approach to a grade crossing.

§234.109 Recordkeeping.

(a) Each railroad shall keep records pertaining to compliance with this subpart. Records may be kept on forms provided by the railroad or by electronic means. Each railroad shall keep the following information for each credible report of warning system malfunction:

(1) Location of crossing (by highway name and DOT/AAR Crossing Inventory Number);

(2) Time and date of receipt by railroad of report of malfunction;

(3) Actions taken by railroad prior to repair and reactivation of repaired system; and

(4) Time and date of repair.

(b) Each railroad shall retain for at least one year (from the latest date of railroad activity in response to a credible report of malfunction) all records referred to in paragraph (a) of this section. Records required to be kept shall be made available to FRA as provided by 49 U.S.C. 20107 (formerly 208 of the Federal Railroad Safety Act of 1970 (45 U.S.C. 437)).

Subpart D—Maintenance, Inspection, and Testing

MAINTENANCE STANDARDS

§234.201 Location of plans.

Plans required for proper maintenance and testing shall be kept at each highway-rail grade crossing warning system location. Plans shall be legible and correct.

§234.203 Control circuits.

All control circuits that affect the safe operation of a highway-rail grade crossing warning system shall operate on the fail-safe principle.

§234.205 Operating characteristics of warning system apparatus.

Operating characteristics of electromagnetic, electronic, or electrical apparatus of each highway-rail crossing warning system shall be maintained in accordance with the limits within which the system is designed to operate.

§234.207 Adjustment, repair, or replacement of component.

(a) When any essential component of a highway-rail grade crossing warning system fails to perform its intended function, the cause shall be determined and the faulty component adjusted, repaired, or replaced without undue delay.

(b) Until repair of an essential component is completed, a railroad shall take appropriate action under §234.105, Activation failure, §234.106, Partial activation, or §234.107, False activation, of this part.

§234.209 Interference with normal functioning of system.

(a) The normal functioning of any system shall not be interfered with in testing or otherwise without first taking measures to provide for safety of highway traffic that depends on normal functioning of such system.

(b) Interference includes, but is not limited to:

(1) Trains, locomotives or other railroad equipment standing within the system's approach circuit, other than normal train movements or switching operations, where the warning system is not designed to accommodate those activities.

(2) Not providing alternative methods of maintaining safety for the highway user while testing or performing work on the warning systems or on track and other railroad systems or structures which may affect the integrity of the warning system.

§ 234.211 Security of warning system apparatus.

Highway-rail grade crossing warning system apparatus shall be secured against unauthorized entry.

§ 234.213 Grounds.

Each circuit that affects the proper functioning of a highway-rail grade crossing warning system shall be kept free of any ground or combination of grounds that will permit a current flow of 75 percent or more of the release value of any relay or electromagnetic device in the circuit. This requirement does not apply to: circuits that include track rail; alternating current power distribution circuits that are grounded in the interest of safety; and common return wires of grounded common return single break circuits.

§ 234.215 Standby power system.

A standby source of power shall be provided with sufficient capacity to operate the warning system for a reasonable length of time during a period of primary power interruption. The designated capacity shall be specified on the aplans required by § 234.201 of this part.

§ 234.217 Flashing light units.

(a) Each flashing light unit shall be properly positioned and aligned and shall be visible to a highway user approaching the crossing.

(b) Each flashing light unit shall be maintained to prevent dust and moisture from entering the interior of the unit. Roundels and reflectors shall be clean and in good condition.

(c) All light units shall flash alternately. The number of flashes per minute for each light unit shall be 35 minimum and 65 maximum.

§ 234.219 Gate arm lights and light cable.

Each gate arm light shall be maintained in such condition to be properly visible to approaching highway users. Lights and light wire shall be secured to the gate arm.

§ 234.221 Lamp voltage.

The voltage at each lamp shall be maintained at not less than 85 percent of the prescribed rating for the lamp.

§ 234.223 Gate arm.

Each gate arm, when in the downward position, shall extend across each lane of approaching highway traffic and shall be maintained in a condition sufficient to be clearly viewed by approaching highway users. Each gate arm shall start its downward motion not less than three seconds after flashing lights begin to operate and shall assume the horizontal position at least five seconds before the arrival of any normal train movement through the crossing. At those crossings equipped with four quadrant gates, the timing requirements of this section apply to entrance gates only.

§ 234.225 Activation of warning system.

A highway-rail grade crossing warning system shall be maintained to activate in accordance with the design of the warning system, but in no event shall it provide less than 20 seconds warning time for the normal operation of through trains before the grade crossing is occupied by rail traffic.

§ 234.227 Train detection apparatus.

(a) Train detection apparatus shall be maintained to detect a train or railcar in any part of a train detection circuit, in accordance with the design of the warning system.

(b) If the presence of sand, rust, dirt, grease, or other foreign matter is known to prevent effective shunting, a railroad shall take appropriate action under § 234.105, ''Activation failure,'' to safeguard highway users.

§ 234.229 Shunting sensitivity.

Each highway-rail grade crossing train detection circuit shall detect the application of a shunt of 0.06 ohm resistance when the shunt is connected across the track rails of any part of the circuit.

§ 234.231 Fouling wires.

Each set of fouling wires in a highway-rail grade crossing train detection circuit shall consist of at least two discrete conductors. Each conductor shall be of sufficient conductivity and shall be maintained in such condition to ensure proper operation of the train detection apparatus when the train detection circuit is shunted. Installation of a single duplex wire with single plug acting as fouling wires is prohibited. Existing installations having single duplex wires with a single plug for fouling wires may be continued in use until they require repair or replacement.

§ 234.233 Rail joints.

Each non-insulated rail joint located within the limits of a highway-rail grade crossing train detection circuit shall be bonded by means other than joint bars and the bonds shall be maintained in such condition to ensure electrical conductivity.

§ 234.235 Insulated rail joints.

Each insulated rail joint used to separate train detection circuits of a highway-rail grade crossing shall be maintained to prevent current from flowing between rails separated by the insulation in an amount sufficient to cause a failure of the train detection circuit.

§ 234.237 Reverse switch cut-out circuit.

A switch, when equipped with a switch circuit controller connected to the point and interconnected with warning system circuitry, shall be maintained so that the warning system can only be cut out when the switch point is within one-half inch of full reverse position.

§ 234.239 Tagging of wires and interference of wires or tags with signal apparatus.

Each wire shall be tagged or otherwise so marked that it can be identified at each terminal. Tags and other marks of identification shall be made of insulating material and so arranged that tags and wires do not interfere with moving parts of the apparatus. This requirement applies to each wire at each terminal in all housings including switch circuit controllers and terminal or junction boxes. This requirement does not apply to flashing light units, gate arm light units and other auxiliary light units. The local wiring on a solid state crossing controller rack does not require tags if the wiring is an integral part of the solid state equipment.

§ 234.241 Protection of insulated wire; splice in underground wire.

Insulated wire shall be protected from mechanical injury. The insulation shall not be punctured for test purposes. A splice in underground wire shall have insulation resistance at least equal to that of the wire spliced.

§ 234.243 Wire on pole line and aerial cable.

Wire on a pole line shall be securely attached to an insulator that is properly fastened to a cross arm or bracket supported by a pole or other support. Wire shall not interfere with, or be interfered with by, other wires on the pole line. Aerial cable shall be supported by messenger wire. An open-wire transmission line operating at voltage of 750 volts or more shall be placed not less than 4 feet above the nearest cross arm carrying active warning system circuits.

§ 234.245 Signs.

Each sign mounted on a highway-rail grade crossing signal post shall be maintained in good condition and be visible to the highway user.

INSPECTIONS AND TESTS

§ 234.247 Purpose of inspections and tests; removal from service of relay or device failing to meet test requirements.

(a) The inspections and tests set forth in §§ 234.249 through 234.271 are required at highway-rail grade crossings located on in service railroad tracks and shall be made to determine if the warning system and its component

parts are maintained in a condition to perform their intended function.

(b) If a railroad elects not to comply with the requirements of these sections because all tracks over the grade crossing are out of service or the railroad suspends operations during a portion of the year, or the railroad suspends operations during a portion of the year, and the grade crossing warning system is also temporarily taken out of service a full inspection and all required tests must be successfully completed before railroad operations over the grade crossing resume.

(c) Any electronic device, relay, or other electromagnetic device that fails to meet the requirements of tests required by this part shall be removed from service and shall not be restored to service until its operating characteristics are in accordance with the limits within which such device or relay is designed to operate.

§ 234.249 Ground tests.

A test for grounds on each energy bus furnishing power to circuits that affect the safety of warning system operation shall be made when such energy bus is placed in service and at least once each month thereafter.

§ 234.251 Standby power.

Standby power shall be tested at least once each month.

§ 234.253 Flashing light units and lamp voltage.

(a) Each flashing light unit shall be inspected when installed and at least once every twelve months for proper alignment and frequency of flashes in accordance with installation specifications.

(b) Lamp voltage shall be tested when installed and at least once every 12 months thereafter.

(c) Each flashing light unit shall be inspected for proper visibility, dirt and damage to roundels and reflectors at least once each month.

§ 234.255 Gate arm and gate mechanism.

(a) Each gate arm and gate mechanism shall be inspected at least once each month.

(b) Gate arm movement shall be observed for proper operation at least once each month.

(c) Hold-clear devices shall be tested for proper operation at least once every 12 months.

§ 234.257 Warning system operation.

(a) Each highway-rail crossing warning system shall be tested to determine that it functions as intended when it is placed in service. Thereafter, it shall be tested at least once each month and whenever modified or disarranged.

(b) Warning bells or other stationary audible warning devices shall be tested when installed to determine that they function as intended. Thereafter, they shall be tested at least once each month and whenever modified or disarranged.

§ 234.259 Warning time.

Each crossing warning system shall be tested for the prescribed warning time at least once every 12 months and when the warning system is modified because of a change in train speeds. Electronic devices that accurately determine actual warning time may be used in performing such tests.

§ 234.261 Highway traffic signal pre-emption.

Highway traffic signal pre-emption interconnections, for which a railroad has maintenance responsibility, shall be tested at least once each month.

§ 234.263 Relays.

(a) Except as stated in paragraph (b) of this section, each relay that affects the proper functioning of a crossing warning system shall be tested at least once every four years.

(b)(1) Alternating current vane type relays, direct current polar type relays, and relays with soft iron magnetic structure shall be tested at least once every two years.

(2) Alternating current centrifugal type relays shall be tested at least once every 12 months.

(c) Testing of relays requiring testing on four year intervals shall be completed in accordance with the following schedule:

(1) Not less than 50% by the end of calendar year 1996;

(2) Not less than a total of 75% by the end of calendar year 1997; and

(3) One hundred percent by the end of calendar year 1998.

(d) Testing of relays requiring testing on two year intervals shall be completed by the end of calendar year 1996.

§ 234.265 Timing relays and timing devices.

Each timing relay and timing device shall be tested at least once every twelve months. The timing shall be maintained at not less than 90 percent nor more than 110 percent of the 41 predetermined time interval. The predetermined time interval shall be shown on the plans or marked on the timing relay or timing device. Timing devices which perform internal functions associated with motion detectors, motion sensors, and grade crossing predictors are not subject to the requirements of this section.

§ 234.267 Insulation resistance tests, wires in trunking and cables.

(a) Insulation resistance tests shall be made when wires or cables are installed and at least once every ten years thereafter.

(b) Insulation resistance tests shall be made between all conductors and ground, between conductors in each multiple conductor cable, and between conductors in trunking. Insulation resistance tests shall be performed when wires, cables, and insulation are dry.

(c) Subject to paragraph (d) of this section, when insulation resistance of wire or cable is found to be less than 500,000 ohms, prompt action shall be taken to repair or replace the defective wire or cable. Until such defective wire or cable is replaced, insulation resistance tests shall be made annually.

(d) A circuit with a conductor having an insulation resistance of less than 200,000 ohms shall not be used.

(e) Required insulation resistance testing that does not conform to the required testing schedule of this section shall be completed in accordance with the following schedule:

(1) Not less than 50% by the end of calendar year 1996;

(2) Not less than a total of 75% by the end of calendar year 1997; and

(3) One hundred percent by the end of calendar year 1998.

§ 234.269 Cut-out circuits.

Each cut-out circuit shall be tested at least once every three months to determine that the circuit functions as intended. For purposes of this section, a cut-out circuit is any circuit which overrides the operation of automatic warning systems. This includes both switch cut-out circuits and devices which enable personnel to manually override the operation of automatic warning systems.

§ 234.271 Insulated rail joints, bond wires, and track connections.

Insulated rail joints, bond wires, and track connections shall be inspected at least once every three months.

§ 234.273 Results of inspections and tests.

(a) Results of inspections and tests made in compliance with this part shall be recorded on forms provided by the railroad, or by electronic means, subject to approval by the Associate Administrator for Safety. Each record shall show the name of the railroad, AAR/DOT inventory number, place and date, equipment tested, results of tests, repairs, replacements, adjustments made, and condition in which the apparatus was left.

(b) Each record shall be signed or electronically coded by the employee making the test and shall be filed in the office of a supervisory official having jurisdiction. Records required to be kept shall be made available to FRA as provided by 49 U.S.C. 20107 (formerly § 208 of the Federal Railroad Safety Act of 1970 (45 U.S.C. 437)).

(c) Each record shall be retained until the next record for that test is filed but in no case for less than one year from the date of the test.

APPENDIX A TO PART 234—SCHEDULE OF CIVIL PENALTIES [1]

Section	Violation	Willful violation
Subpart B—Reports		
234.7 Accidents involving grade crossing signal failure	$5,000	$7,500
234.9 Grade crossing signal system failure reports	2,500	5,000
Subpart C—Response to Reports of Warning System Malfunction		
Sec.		
234.101 Employee notification rules	2,500	5,000
234.103 Timely response to report of malfunction	2,500	5,000
234.105 Activation failure		
(a) Failure to notify—train crews	5,000	7,500
Other railroads	5,000	7,500
(b) Failure to notify law enforcement agency	2,500	5,000
(c) Failure to comply with—flagging requirements	5,000	5,000
Speed restrictions	5,000	7,500
(d) Failure to activate horn or whistle	5,000	7,500
234.106 Partial activation		
(a) Failure to notify—train crews	5,000	7,500
Other railroads	5,000	7,500
(b) Failure to notify law enforcement agency	2,500	5,000
(c) Failure to comply with—flagging requirements speed restrictions	5,000	7,500
(d) Failure to activate horn or whistle	5,000	7,500
234.107 False activation		
(a) Failure to notify—train crews	5,000	7,500
Other railroads	5,000	7,500
(b) Failure to notify law enforcement agency	2,500	5,000
(c) Failure to comply with—flagging requirements	5,000	7,500
Speed restrictions	5,000	7,500
(d) Failure to activate horn or whistle	5,000	7,500
234.109 Recordkeeping	1,000	2,000
Subpart D—Maintenance, Inspection, and Testing		
Maintenance Standards:		
234.201 Location of plans	1,000	2,000
234.203 Control circuits	1,000	2,000
234.205 Operating characteristics of warning system apparatus	2,500	5,000
234.207 Adjustment, repair, or replacement of component	2,500	5,000
234.209 Interference with normal functioning of system	5,000	7,500
234.211 Locking of warning system apparatus	1,000	2,000
234.213 Grounds	1,000	2,000
234.215 Standby power system	5,000	7,500
234.217 Flashing light units	1,000	2,000
234.219 Gate arm lights and light cable	1,000	2,000
234.221 Lamp voltage	1,000	2,000
234.223 Gate arm	1,000	2,000
234.225 Activation of warning system	5,000	7,500
234.227 Train detection apparatus	2,500	5,000
234.229 Shunting sensitivity	2,500	5,000
234.231 Fouling wires	1,000	2,000
234.233 Rail joints	1,000	2,000
234.235 Insulated rail joints	1,000	2,000
234.237 Switch equipped with circuit controller	1,000	2,000
234.239 Tagging of wires and interference of wires or tags with signal apparatus	1,000	2,000
234.241 Protection of insulated wire; splice in underground wire	1,000	2,000
234.243 Wire on pole line and aerial cable	1,000	2,000
234.245 Signs	1,000	2,000
Inspections and Tests:		
234.247 Purpose of inspections and tests; removal from service of relay or device failing to meet test requirements	2,500	5,000
234.249 Ground tests	2,500	5,000
234.251 Standby power	5,000	7,500
234.253 Flashing light units and lamp voltage	1,000	2,000
234.255 Gate arm and gate mechanism	1,000	2,000
234.257 Warning system operation	2,500	5,000
234.259 Warning time	1,000	2,000
234.261 Highway traffic signal pre-emption	1,000	2,000
234.263 Relays	1,000	2,000
234.265 Timing relays and timing devices	1,000	2,000
234.267 Insulation resistance tests, wires in trunking and cables	2,500	5,000
234.269 Cut-out circuits	1,000	2,000
234.271 Insulated rail joints, bond wires, and track connections	2,500	5,000

Section	Violation	Willful violation
234.273 Results of tests	1,000	2,000

[1] A penalty may be assessed against an individual only for a willful violation. The Administrator reserves the right to assess a penalty of up to $20,000 for any violation where circumstances warrant. See 49 CFR Part 209, Appendix A.

APPENDIX B TO PART 234—ALTERNATE METHODS OF PROTECTION UNDER 49 CFR 234.105(C), 234.106, AND 234.107(C)

[This is a summary—see body of text for complete requirements]

	Flagger for each direction of traffic	Police officer present	Flagger present, but not one for each direction of traffic	No flagger/no police
False Activation	Normal Speed	Normal Speed	Proceed with caution—maximum speed of 15 mph.	Proceed with caution—maximum speed of 15 mph.
Partial Activation*	Normal Speed	Normal Speed	Proceed with caution—maximum speed of 15 mph.	Proceed with caution—maximum speed of 15 mph.
Activation Failure**	Normal Speed	Normal Speed	Proceed with caution—maximum speed of 15 mph.	Stop: Crewmember flag traffic and reboard.

*Partial activiation—full warning not given.

Non-gated crossing with one pair of lights designed to flash alternatively, one light does not work (and back-lights from other side not visible).

Gated crossing—gate arm not horizontal; or any portion of a gate arm is missing if that portion had held a gate arm flashing light.

**Activitation failure includes—if more than 50% of the flashing lights on any approach lane not functioning; or if an approach lane has two or more pairs of flashing lights, there is not at least one pair operating as intended.

PART 235—INSTRUCTIONS GOVERNING APPLICATIONS FOR APPROVAL OF A DISCONTINUANCE OR MATERIAL MODIFICATION OF A SIGNAL SYSTEM OR RELIEF FROM THE REQUIREMENTS OF PART 236

Sec.

235.1 Scope.
235.3 Application.
235.5 Changes requiring filing of application.
235.7 Changes not requiring filing of application.
235.8 Relief from the requirements of part 236 of this title.
235.9 Civil penalty.
235.10 Contents of application.
235.12 Additional required information-prints.
235.13 Filing procedure.
235.14 Notice.
235.20 Protests.
APPENDIX A TO PART 235—SCHEDULE OF CIVIL PENALTIES

AUTHORITY: 49 App. U.S.C. 26, as amended; 49 App. U.S.C. 1655(e), as amended; 45 U.S.C. 431, 437, and 438, as amended; Pub. L. 100–342; and 49 CFR 1.49 (f), (g), and (m).

SOURCE: 49 FR 3380, Jan. 26, 1984, unless otherwise noted.

§235.1 Scope.

This part prescribes application for approval to discontinue or materially modify block signal systems, interlockings, traffic control systems, automatic train stop, train control, or cab signal systems, or other similar appliances, devices, methods, or systems, and provides for relief from part 236 of this title.

§235.3 Application.

(a) Except as provided in paragraph (b) of this section, this part applies to railroads that operate on standard gage track which is part of the general railroad system of transportation.

(b) This part does not apply to rail rapid transit operations conducted over track that is used exclusively for that purpose and that is not part of the general system of railroad transportation.

§235.5 Changes requiring filing of application.

(a) Except as provided in §235.7, applications shall be filed to cover the following:

(1) The discontinuance of a block signal system, interlocking, traffic control system, automatic train stop, train control, or cab signal system or other similar appliance or device;

(2) The decrease of the limits of a block signal system, interlocking, traffic control system, automatic train stop, train control, or cab signal system; or

(3) The modification of a block signal system, interlocking, traffic control system, automatic train stop, train control, or cab signal system.

(b) [Reserved]

(Approved by the Office of Management and Budget under control number 2130–0042)

§ 235.7 Changes not requiring filing of application.

(a) It is not necessary to file an application for approval of the following discontinuances:

(1) Removal of block signal system, interlocking, traffic control system, automatic train stop, train control, or cab signal system from track approved for abandonment by formal proceeding;

(2) Removal of devices and associated signals used to provide protection against unusual contingencies such as landslide, burned bridge, high water, high and wide load, or tunnel protection when the unusual contingency no longer exists;

(3) Removal of an interlocking where a drawbridge has been permanently closed by the formal approval of another government agency; or

(4) Removal from service not to exceed six months of block signal system, interlocking, or traffic control system necessitated by catastrophic occurrence such as derailment, flood, fire, or hurricane.

(b) When the resultant arrangement will comply with part 236 of this title, it is not necessary to file for approval to decrease the limits of a system as follows:

(1) Decrease of the limits of an interlocking when interlocked switches, derails, or movable-point frogs are not involved;

(2) Removal of electric or mechanical lock from hand-operated switch in automatic block signal or traffic control territory where train speed over switch does not excess 20 miles per hour; or

(3) Removal of electric or mechanical lock from hand-operated switch in automatic block signal or traffic control territory where trains are not permitted to clear the main track at such switch.

(c) When the resultant arrangement will comply with part 236 of this title, it is not necessary to file an application for approval of the following modifications:

(1) A modification that is required to comply with an order of the Federal Railroad Administration or any section of part 236 of this title;

(2) The installation of an automatic block signal or a traffic control system to replace manual block or non-signaled territory;

(3) The installation of a traffic control system to replace a roadway automatic block signal system (discontinuance of an automatic train stop, train control, or cab signal system is not permitted without FRA approval);

(4) The installation of an automatic train stop, train control, or cab signal system in an existing automatic block or traffic control system;

(5) The installation of a continuous inductive automatic train stop system to replace an existing intermittent inductive automatic train stop system;

(6) The installation of a continuous inductive automatic train stop system to supplement an existing automatic cab signal system;

(7) The installation of an automatic train control system to replace an existing automatic train stop system or to supplement an existing automatic cab signal system;

(8) The installation of an interlocking to replace existing stop signs, gates, or pipe-connected derails protecting a railroad crossing at grade;

(9) The installation of all relay type locking to replace existing mechanical or electromechanical locking of an interlocking;

(10) The installation of an additional controlled point in existing traffic control system;

(11) The installation of an interlocking in an existing block signal system;

(12) The conversion of a hand-operated switch, a hand-operated switch locked either electrically or mechanically, or a spring switch to a power-operated switch;

(13) The conversion of a spring switch to a hand-operated switch, or to a

hand-operated switch locked either electrically or mechanically;

(14) The removal or relocation of signals associated with a spring switch converted to hand operation;

(15) The installation, relocation, or removal of signals to specifically provide adequate stopping distance;

(16) The change of aspects;

(17) The relocation of a signal to improve preview of signal aspect visibility;

(18) To replace a signal with a signal of another type;

(19) To change an approach signal to operative or inoperative signal, or remove an approach signal not required by §236.310 of this title;

(20) The change in location of a machine from which an interlocking or traffic control system is controlled;

(21) The closing of a manual block station or the change in hours during which a manual block station is attended;

(22) The change in hours during which a manual interlocking is attended provided the interlocking operates for all routes over which train movements are permitted;

(23) The installation of devices used to provide protection against unusual contingencies such as landslide, burned bridges, high water, high and wide loads, or dragging equipment;

(24) The installation, relocation, or removal of signals, interlocked switches, derails, movable-point frogs, or electric locks in an existing system directly associated with:

(i) The installation of new track;

(ii) The elimination of existing track other than a second main track;

(iii) The extension or shortening of a passing siding;

(iv) Elimination of second main track where signal system mn retained main track is arranged to provide both opposing and following protection for train movements provided second main track is physically removed; or

(v) A line relocation; or

(vi) The conversion of pole line circuits to electronic (coded) track circuits provided that the railroad gives notice and a profile plan of the change to the FRA regional office having jurisdiction over that territory at least 60 days in advance of the change. The railroad must also at the same time provide a copy of the notice and profile plan to representatives of employees responsible for maintenance, inspection and testing of the signal system under 49 CFR Part 236. The signal system modification will be deemed acceptable, unless within 60 days, the Regional Adminstrator stays action by written notice to the railroad and refers the issue to the Railroad Safety Board for decision.

(25) The temporary or permanent arrangement of existing systems necessitated by highway rail separation construction. Temporary arrangements shall be removed within six months following completion of construction.

[49 FR 3380, Jan. 26, 1984, as amended at 61 FR 33873, July 1, 1996]

§235.8 Relief from the requirements of part 236 of this title.

Relief from the requirements of the rules, standards and instructions contained in part 236 of this title will be granted upon a adequate showing by an individual carrier. Relief heretofore granted to any carrier shall constitute relief to the same extent as relief granted under the requirements of this part.

(Approved by the Office of Management and Budget under control number 2130–0043)

§235.9 Civil penalty.

Any person (including a railroad and any manager, supervisor, official, or other employee or agent of a railroad) who violates any requirement of this part or causes the violation of any such requirement is subject to a civil penalty of $2,500 except that: Penalties may be assessed against individuals only for willful violations, and where a grossly negligent violation or a pattern of repeated violations has created an imminent hazard of death or injury to persons, or has caused death or injury, a penalty not to exceed $20,000 per violation may be assessed. Each day a violation continues shall constitute a separate offense. See appendix A to this part for a statement of agency civil penalty policy.

[53 FR 28602, July 28, 1988, as amended at 53 FR 52936, Dec. 29, 1988]

§ 235.10 Contents of applications.

(a) The application may be submitted by letter and shall contain the following information:

(1) The corporate name of each applicant;

(2) The manner in which applicant is involved;

(3) The location of the project, giving name of operating division and nearest station;

(4) The track or tracks involved;

(5) A complete description of proposed changes as they would affect the existing facilities or of the section from which relief is sought;

(6) The reason for proposed changes or justification for relief from the requirements;

(7) The approximate dates of beginning and completion of project;

(8) Changes in operating practices, temporary or permanent;

(9) Whether safety of operation will be affeced, and if so, how; and

(10) Whether proposed changes will conform to the Federal Railroad Administration's Rules, Standards and Instructions (part 236 of this title).

(b) [Reserved]

(Approved by the Office of Management and Budget under control number 2130–0042)

§ 235.12 Additional required information-prints.

(a) A print or prints, size 8 inches by 10½ inches, or 8½ inches by 11 inches, or folded to 8 inches by 10½ inches or to 8½ inches by 11 inches, shall be furnished with each application.

(b) The print or prints shall be to scale or by indicated dimensions, using Association of American Railroads graphic symbols.

(c) The following information shall be shown on the print or prints:

(1) Present and proposed arrangement of tracks and signal facilities;

(2) Name of carrier;

(3) Operating division;

(4) Place and State; and

(5) Timetable directions of movements.

(d) If stopping distances are involved, the following information shall also be shown:

(1) Curvature and grade;

(2) Maximum authorized speeds of trains; and

(3) Length of signal control circuits for each signal indication displayed.

(e) The following color scheme is suggested on prints:

(1) Installations, relocations, and added signal aspects should be colored, preferably in yellow;

(2) Removals, discontinuances, and abandonments should be colored, preferably in red; and

(3) Existing facilities not pertinent to change proposed in application should be shown uncolored.

(Approved by the Office of Management and Budget under control number 2130–0042)

§ 235.13 Filing procedure.

(a) Applications or requests for reconsideration of an application shall be submitted by an authorized officer of the carrier.

(b) The original and two copies of each application with supporting papers should be filed.

(c) The application and correspondence in reference thereto should be addressed to the Associate Administrator for Safety, Federal Railroad Administration, Washington, DC 20590.

(d) A separate application shall be filed for each project.

(e) At a joint facility where changes are proposed in the automatic block signal system, interlocking, traffic control system, automatic train stop, train control, or cab signal system on the tracks of more than one carrier, or if more than one carrier will be affected by the proposed changes or relief sought, a joint application signed by all carriers affected shall be filed.

(f) Where only one carrier at a joint facility is affected by the discontinuance or modification of the installation or relief sought, it shall be responsible for filing the application. It shall also certify that the other joint carriers have been notified of the filing of its application.

(Approved by the Office of Management and Budget under control number 2130–0042)

§ 235.14 Notice.

The FRA will post public notice of the filing of an application or a request for reconsideration of an application in

the FRA Office of Public Affairs and will mail copies to all interested parties.

§ 235.20 Protests.

(a) A protest against the granting of an application shall set forth specifically the grounds upon which it is made, and contain a concise statement of the interest of protestant in the proceeding.

(b) The original and two copies of any protest shall be filed with the Associate Administrator for Safety, Federal Railroad Administration, Washington, DC 20590, and one copy shall be furnished to each applicant.

(c) Protests should be filed within the time limit set forth in the public notice.

(d) The protestant shall certify that service of a copy of its protest was made upon each applicant.

(e) Request for hearing must be accompanied with a showing why the protestant is unable to properly present his or her position by written statements.

EFFECTIVE DATE NOTE: At 49 FR 3380, Jan. 26, 1984, Part 235 was revised. This section contains information collection and recordkeeping requirements and will not become effective until approval has been given by the Office of Management and Budget.

APPENDIX A TO PART 235—SCHEDULE OF CIVIL PENALTIES[1]

Section	Violation	Willful violation
235.5 Changes requiring filing of application	$5,000	$7,500

[1] A penalty may be assessed against an individual only for a willful violation. The Administrator reserves the right to assess a penalty of up to $20,000 for any violation where circumstances warrant. See 49 CFR part 209, appendix A.

[53 FR 52936, Dec. 29, 1988]

PART 236—RULES, STANDARDS, AND INSTRUCTIONS GOVERNING THE INSTALLATION, INSPECTION, MAINTENANCE, AND REPAIR OF SIGNAL AND TRAIN CONTROL SYSTEMS, DEVICES, AND APPLIANCES

Sec.

236.0 Applicability, minimum requirements, and civil penalties.

Subpart A—Rules and Instructions: All Systems

GENERAL

236.1 Plans, where kept.
236.2 Grounds.
236.3 Locking of signal apparatus housings.
236.4 Interference with normal functioning of device.
236.5 Design of control circuits on closed circuit principle.
236.6 Hand-operated switch equipped with switch circuit controller.
236.7 Circuit controller operated by switch-and-lock movement.
236.8 Operating characteristics of electromagnetic, electronic, or electrical apparatus.
236.9 Selection of circuits through indicating or annunciating instruments.
236.10 Electric locks, force drop type; where required.
236.11 Adjustment, repair, or replacement of component.
236.12 Spring switch signal protection; where required.
236.13 Spring switch; selection of signal control circuits through circuit controller.
236.14 Spring switch signal protection; requirements.
236.15 Timetable instructions.
236.16 Electric lock, main track releasing circuit.
236.17 Pipe for operating connections, requirements.

ROADWAY SIGNALS AND CAB SIGNALS

236.21 Location of roadway signals.
236.22 Semaphore signal arm; clearance to other objects.
236.23 Aspects and indications.
236.24 Spacing of roadway signals.
236.25 [Reserved]
236.26 Buffing device, maintenance.

TRACK CIRCUITS

236.51 Track circuit requirements.
236.52 Relayed cut-section.
236.53 Track circuit feed at grade crossing.
236.54 Minimum length of track circuit.
236.55 Dead section; maximum length.
236.56 Shunting sensitivity.
236.57 Shunt and fouling wires.
236.58 Turnout, fouling section.
236.59 Insulated rail joints.
236.60 Switch shunting circuit; use restricted.

WIRES AND CABLES

236.71 Signal wires on pole line and aerial cable.
236.72 [Reserved]
236.73 Open-wire transmission line; clearance to other circuits.
236.74 Protection of insulated wire; splice in underground wire.

236.75 [Reserved]
236.76 Tagging of wires and interference of wires or tags with signal apparatus.

INSPECTIONS AND TESTS; ALL SYSTEMS

236.101 Purpose of inspection and tests; removal from service of relay or device failing to meet test requirements.
236.102 Semaphore or searchlight signal mechanism.
236.103 Switch circuit controller or point detector.
236.104 Shunt fouling circuit.
236.105 Electric lock.
236.106 Relays.
236.107 Ground tests.
236.108 Insulation resistance tests, wires in trunking and cables.
236.109 Time releases, timing relays and timing devices.
236.110 Results of tests.

Subpart B—Automatic Block Signal Systems

STANDARDS

236.201 Track circuit control of signals.
236.202 Signal governing movements over hand-operated switch.
236.203 Hand operated crossover between main tracks; protection.
236.204 Track signaled for movements in both directions, requirements.
236.205 Signal control circuits; requirements.
236.206 Battery or power supply with respect to relay; location.
236.207 Electric lock on hand-operated switch; control.

Subpart C—Interlocking

STANDARDS

236.301 Where signals shall be provided.
236.302 Track circuits and route locking.
236.303 Control circuits for signals, selection through circuit controller operated by switch points or by switch locking mechanism.
236.304 Mechanical locking or same protection effected by circuits.
236.305 Approach or time locking.
236.306 Facing point lock or switch-and-lock movement.
236.307 Indication locking.
236.308 Mechanical or electric locking or electric circuits; requisites.
236.309 Loss of shunt protection; where required.
236.310 Signal governing approach to home signal.
236.311 Signal control circuits, selection through track relays or devices functioning as track relays and through signal mechanism contacts and time releases at automatic interlocking.
236.312 Movable bridge, interlocking of signal appliances with bridge devices.
236.313 [Reserved]
236.314 Electric lock for hand-operated switch or derail.

RULES AND INSTRUCTIONS

236.326 Mechanical locking removed or disarranged; requirement for permitting train movements through interlocking.
236.327 Switch, movable-point frog or split-point derail.
236.328 Plunger of facing-point lock.
236.329 Bolt lock.
236.330 Locking dog of switch-and-lock movement.
236.331—236.333 [Reserved]
236.334 Point detector.
236.335 Dogs, stops and trunnions of mechanical locking.
236.336 Locking bed.
236.337 Locking faces of mechanical locking; fit.
236.338 Mechanical locking required in accordance with locking sheet and dog chart.
236.339 Mechanical locking; maintenance requirements.
236.340 Electromechanical interlocking machine; locking between electrical and mechanical levers.
236.341 Latch shoes, rocker links, and quandrants.
236.342 Switch circuit controller.

INSPECTION AND TESTS

236.376 Mechanical locking.
236.377 Approach locking.
236.378 Time locking.
236.379 Route locking.
236.380 Indication locking.
236.381 Traffic locking.
236.382 Switch obstruction test.
236.383 Valve locks, valves, and valve magnets.
236.384 Cross protection.
236.385 [Reserved]
236.386 Restoring feature on power switches.
236.387 Movable bridge locking.

Subpart D—Traffic Control Systems

STANDARDS

236.401 Automatic block signal system and interlocking standards applicable to traffic control systems.
236.402 Signals controlled by track circuits and control operator.
236.403 Signals at controlled point.
236.404 Signals at adjacent control points.
236.405 Track signaled for movements in both directions, change of direction of traffic.
236.406 [Reserved]
236.407 Approach or time locking; where required.

236.408 Route locking.
236.409 [Reserved]
236.410 Locking, hand-operated switch; requirements.

RULES AND INSTRUCTIONS

236.426 Interlocking rules and instructions applicable to traffic control systems.

INSPECTION AND TESTS

236.476 Interlocking inspections and tests applicable to traffic control systems.

Subpart E—Automatic Train Stop, Train Control and Cab Signal Systems

STANDARDS

236.501 Forestalling device and speed control.
236.502 Automatic brake application, initiation by restrictive block conditions stopping distance in advance.
236.503 Automatic brake application; initiation when predetermined rate of speed exceeded.
236.504 Operation interconnected with automatic block-signal system.
236.505 Proper operative relation between parts along roadway and parts on locomotive.
236.506 Release of brakes after automatic application.
236.507 Brake application; full service.
236.508 Interference with application of brakes by means of brake valve.
236.509 Two or more locomotives coupled.
236.510 [Reserved]
236.511 Cab signals controlled in accordance with block conditions stopping distance in advance.
236.512 Cab signal indication when locomotive enters block where restrictive conditions obtain.
236.513 Audible indicator.
236.514 Interconnection of cab signal system with roadway signal system.
236.515 Visibility of cab signals.
236.516 Power supply.

RULES AND INSTRUCTIONS; ROADWAY

236.526 Roadway element not functioning properly.
236.527 Roadway element insulation resistance.
236.528 Restrictive condition resulting from open hand-operated switch; requirement.
236.529 Roadway element inductor; height and distance from rail.
236.530 [Reserved]
236.531 Trip arm; height and distance from rail.
236.532 Strap iron inductor; use restricted.
236.533 [Reserved]
236.534 Entrance to equipped territory; requirements.

RULES AND INSTRUCTIONS; LOCOMOTIVES

236.551 Power supply voltage; requirement.
236.552 Insulation resistance; requirement.
236.553 Seal, where required.
236.554 Rate of pressure reduction; equalizing reservoir or brake pipe.
236.555 Repaired or rewound receiver coil.
236.556 Adjustment of relay.
236.557 Receiver; location with respect to rail.
236.558—236.559 [Reserved]
236.560 Contact element, mechanical trip type; location with respect to rail.
236.561 [Reserved]
236.562 Minimum rail current required.
236.563 Delay time.
236.564 Acknowledging time.
236.565 Provision made for preventing operation of pneumatic break-applying apparatus by double-heading cock; requirement.
236.566 Locomotive of each train operating in train stop, train control or cab signal territory; equipped.
236.567 Restrictions imposed when device fails and/or is cut out en route.
236.568 Difference between speeds authorized by roadway signal and cab signal; action required.

INSPECTION AND TESTS; ROADWAY

236.576 Roadway element.
236.577 Test, acknowledgement, and cut-in circuits.

INSPECTION AND TESTS; LOCOMOTIVE

236.586 Daily or after trip test.
236.587 Departure test.
236.588 Periodic test.
236.589 Relays.
236.590 Pneumatic apparatus.

Subpart F—Dragging Equipment and Slide Detectors and Other Similar Protective Devices

STANDARDS

236.601 Signals controlled by devices; location.

Subpart G—Definitions

236.700 Definitions.
236.701 Application, brake; full service.
236.702 Arm, semaphore.
236.703 Aspect.
236.704 [Reserved]
236.705 Bar, locking.
236.706 Bed, locking.
236.707 Blade, semaphore.
236.708 Block.
236.709 Block, absolute.
236.710 Block, latch.
236.711 Bond, rail joint.
236.712 Brake pipe.
236.713 Bridge, movable.

236.714 Cab.
236.715—236.716 [Reserved]
236.717 Characteristics, operating.
236.718 Chart, dog.
236.719 Circuit, acknowledgment.
236.720 Circuit, common return.
236.721 Circuit, control.
236.722 Circuit, cut-in.
236.723 Circuit, double wire; line.
236.724 Circuit, shunt fouling.
236.725 Circuit, switch shunting.
236.726 Circuit, track.
236.727 Circuit, track; coded.
236.728 Circuit, trap.
236.729 Cock, double heading.
236.730 Coil, receiver.
236.731 Controller, circuit.
236.732 Controller, circuit; switch.
236.733 Current, foreign.
236.734 Current of traffic.
236.735 Current, leakage.
236.736 Cut-section.
236.737 Cut-section, relayed.
236.738 Detector, point.
236.739 Device, acknowledging.
236.740 Device, reset.
236.741 Distance, stopping.
236.742 Dog, locking.
236.743 Dog, swing.
236.744 Element, roadway.
236.745 Face, locking.
236.746 Feature, restoring.
236.747 Forestall.
236.748 [Reserved]
236.749 Indication.
236.750 Interlocking, automatic.
236.751 Interlocking, manual.
236.752 Joint, rail, insulated.
236.753 Limits, interlocking.
236.754 Line, open wire.
236.755 Link, rocker.
236.756 Lock, bolt.
236.757 Lock, electric.
236.758 Lock, electric, forced drop.
236.759 Lock, facing point.
236.760 Locking, approach.
236.761 Locking, electric.
236.762 Locking, indication.
236.763 Locking, latch operated.
236.764 Locking, lever operated.
236.765 Locking, mechanical.
236.766 Locking, movable bridge.
236.767 Locking, route.
236.768 Locking, time.
236.769 Locking, traffic.
236.770 Locomotive.
236.771 Machine, control.
236.772 Machine, interlocking.
236.773 Movements, conflicting.
236.774 Movement, facing.
236.775 Movement, switch-and-lock.
236.776 Movement, trailing.
236.777 Operator, control.
236.778 Piece, driving.
236.779 Plate, top.
236.780 Plunger, facing point lock.
236.781 [Reserved]
236.782 Point, controlled.
236.783 Point, stop-indication.
236.784 Position, deenergized.
236.785 Position, false restrictive.
236.786 Principle, closed circuit.
236.787 Protection, cross.
236.788 Receiver.
236.789 Relay, timing.
236.790 Release, time.
236.791 Release, value.
236.792 Reservoir, equalizing.
236.793 Rod, lock.
236.794 Rod, up-and-down.
236.795 Route.
236.796 Routes, conflicting.
236.797 Route, interlocked.
236.798 Section, dead.
236.799 Section, fouling.
236.800 Sheet, locking.
236.801 Shoe, latch.
236.802 Shunt.
236.802a Siding.
236.803 Signal, approach.
236.804 Signal, block.
236.805 Signal, cab.
236.806 Signal, home.
236.807 Signal, interlocking.
236.808 Signals, opposing.
236.809 Signal, slotted mechanical.
236.810 Spectacle, semaphore arm.
236.811 Speed, medium.
236.812 Speed, restricted.
236.813 Speed, slow.
236.813a State, most restrictive.
236.814 Station, control.
236.815 Stop.
236.816 Superiority of trains.
236.817 Switch, electro-pneumatic.
236.818 Switch, facing point.
236.819 Switch, hand operated.
236.820 Switch, interlocked.
236.820a Switch, power-operated.
236.821 Switch, sectionalizing.
236.822 Switch, spring.
236.823 Switch, trailing point.
236.824 System, automatic block signal.
236.825 System, automatic train control.
236.826 System, automatic train stop.
236.827 System, block signal.
236.828 System, traffic control.
236.829 Terminal, initial.
236.830 Time, acknowledging.
236.831 Time, delay.
236.831a Track, main.
236.832 Train.
236.833 Train, opposing.
236.834 Trip.
236.835 Trunking.
236.836 Trunnion.
236.837 Valve, electro-pneumatic.
236.838 Wire, shunt.

APPENDIX A TO PART 236—CIVIL PENALTIES

AUTHORITY: 49 App. U.S.C. 26, as amended; 49 App. U.S.C. 1655(e), as amended; 45 U.S.C. 431, 437, and 438, as amended; Pub. L. 100–342; and 49 CFR 1.49 (f), (g), and (m).

SOURCE: 33 FR 19684, Dec. 25, 1968, unless otherwise noted.

§236.0 Applicability, minimum requirements, and civil penalties.

(a) Except as provided in paragraph (b) of this section, this part applies to railroads that operate on standard gage track which is part of the general railroad system of transportation.

(b) This part does not apply to rail rapid transit operations conducted over track that is used exclusively for that purpose and that is not part of the general system of railroad transportation.

(c) Where a passenger train is operated at a speed of 60 or more miles per hour, or a freight train is operated at a speed of 50 or more miles per hour, a block signal system complying with the provisions of this part shall be installed or a manual block system shall be placed permanently in effect which shall conform to the following conditions:

(1) A passenger train shall not be admitted to a block occupied by another train except under flag protection;

(2) No train shall be admitted to a block occupied by a passenger train except under flag protection;

(3) No train shall be admitted to a block occupied by an opposing train except under flag protection; and

(4) A freight train, including a work train, may be authorized to follow a freight train, including a work train, into a block but the following train must proceed prepared to stop within one-half the range of vision but not exceeding 20 miles per hour.

(d) Where any train is operated at a speed of 80 or more miles per hour, an automatic cab signal, automatic train stop or automatic train control system complying with the provisions of this part shall be installed.

(e) Nothing in this section authorizes the discontinuance of a block signal system, interlocking, traffic control system, automatic train stop, train control, or cab signal system without approval of the Federal Railroad Administration.

(f) Any person (including a railroad subject to this part and any manager, supervisor, official, or other employee or agent of such a railroad) who violates any requirement of this part or causes the violation of any such requirement is subject to a civil penalty of at least $250 and not more than $10,000 per violation, except that: Penalties may be assessed against individuals only for willful violations, and, where a grossly negligent violation or a pattern of repeated violations has created an imminent hazard of death or injury to persons, or has caused death or injury, a penalty not to exceed $20,000 per violation may be assessed. Each day a violation continues shall constitute a separate offense. See appendix A to this part for a statement of agency civil penalty policy.

[49 FR 3382, Jan. 26, 1984, as amended at 53 FR 52936, Dec. 29, 1988]

Subpart A—Rules and Instructions: All Systems

GENERAL

§236.1 Plans, where kept.

As required for maintenance, plans shall be kept at all interlockings, automatic signals and controlled points. Plans shall be legible and correct.

[49 FR 3382, Jan. 26, 1984]

§236.2 Grounds.

Each circuit, the functioning of which affects the safety of train operations, shall be kept free of any ground or combination of grounds which will permit a flow of current equal to or in excess of 75 percent of the release value of any relay or other electromagnetic device in the circuit, except circuits which include any track rail and except the common return wires of single-wire, single-break, signal control circuits using a grounded common, and alternating current power distribution circuits which are grounded in the interest of safety.

§236.3 Locking of signal apparatus housings.

Signal apparatus housings shall be secured against unauthorized entry.

[49 FR 3382, Jan. 26, 1984]

§236.4 Interference with normal functioning of device.

The normal functioning of any device shall not be interfered with in testing

or otherwise without first taking measures to provide for safety of train operation which depends on normal functioning of such device.

[49 FR 3382, Jan. 26, 1984]

§ 236.5 Design of control circuits on closed circuit principle.

All control circuits the functioning of which affects safety of train operation shall be designed on the closed circuit principle, except circuits for roadway equipment of intermittent automatic train stop system.

§ 236.6 Hand-operated switch equipped with switch circuit controller.

Hand-operated switch equipped with switch circuit controller connected to the point, or with facing-point lock and circuit controller, shall be so maintained that when point is open one-fourth inch or more on facing-point switch and three-eights inch or more on trailing-point switch, track or control circuits will be opened or shunted or both, and if equipped with facing-point lock with circuit controller, switch cannot be locked. On such hand-operated switch, switch circuit controllers, facing-point locks, switch-and-lock movements, and their connections shall be securely fastened in place, and contacts maintained with an opening of not less than one-sixteenth inch when open.

§ 236.7 Circuit controller operated by switch-and-lock movement.

Circuit controller operated by switch-and-lock movement shall be maintained so that normally open contacts will remain closed and normally closed contacts will remain open until the switch is locked.

§ 236.8 Operating characteristics of electromagnetic, electronic, or electrical apparatus.

Signal apparatus, the functioning of which affects the safety of train operation, shall be maintained in accordance with the limits within which the device is designed to operate.

[49 FR 3382, Jan. 26, 1984]

§ 236.9 Selection of circuits through indicating or annunciating instruments.

Signal control and electric locking circuits shall not be selected through the contacts of instruments designed primarily for indicating or annunciating purposes in which an indicating element attached to the armature is arranged so that it can in itself cause improper operation of the armature.

§ 236.10 Electric locks, force drop type; where required.

Electric locks on new installations and new electric locks applied to existing installations shall be of the forced drop type.

§ 236.11 Adjustment, repair, or replacement of component.

When any component of a signal system, the proper functioning of which is essential to the safety of train operation, fails to perform its intended signaling function or is not in correspondence with known operating conditions, the cause shall be determined and the faulty component adjusted, repaired or replaced without undue delay.

[49 FR 3382, Jan. 26, 1984]

§ 236.12 Spring switch signal protection; where required.

Signal protection shall be provided for facing and trailing movements through spring switch within interlocking limits and through spring switch installed in automatic block signal, train stop, train control or cab signal territory where train movements over the switch are made at a speed exceeding 20 miles per hour, except that signal protection shall be required only with the current of traffic on track signaled for movement in only one direction.

NOTE: Does not apply to spring switch installed prior to October 1, 1950 in automatic block signal, automatic train stop, or automatic train control territory.

[49 FR 3383, Jan. 26, 1984]

§ 236.13 Spring switch; selection of signal control circuits through circuit controller.

The control circuits of signals governing facing movements over a main

track spring switch shall be selected through the contacts of a switch circuit controller, or through the contacts of relay repeating the position of such circuit controller, which, when normally closed switch point is open one-fourth inch or more, will cause such signals to display their most restrictive aspects, except that where a separate aspect is displayed for facing movements over the switch in the reverse position the signal shall display its most restrictive aspect when the switch points are open one-fourth inch or more from either the normal or reverse position.

§ 236.14 Spring switch signal protection; requirements.

(a) The indication of signal governing movements from siding to main track with the current of traffic on track signaled for movements in only one direction through a spring switch in automatic block signal territory shall be not less restrictive than ''Proceed at Restricted Speed' when the block, into which movements are governed by the signal, is occupied, and shall be ''Stop'' when the main track is occupied by a train approaching the switch within at least 1,500 feet in approach of the approach signal located stopping distance from the main track signal governing trailing movements over switch, except that the indication may be caused to be less restrictive if approach or time locking is used.

(b) The indication of signal governing movements against the current of traffic from the reverse main of main tracks to a single track, or signal governing movements from a siding to a main track signaled for movements in either direction, through a spring switch, in automatic block signal territory, shall be not less restrictive than ''Proceed at Restricted Speed'' when the block, into which movements are governed by the signal, is occupied by a preceding train, and shall be ''Stop'' when the block on the single track into which the signal governs is occupied by an opposing train.

(c) The indication of signal governing movements against the current of traffic from the reverse main of main tracks to a single track or signal governing movements from a siding to a main track signaled for movements in either direction through a spring switch in automatic block signal territory shall be ''Stop'' when the normal direction main track of the double track or the single track signaled for movements in both directions is occupied by a train approaching the switch within at least 1,500 feet in approach of the approach signal located stopping distance from the main track signal governing trailing movements over switch, except that indication may be caused to be less restrictive if approach or time locking is used.

§ 236.15 Timetable instructions.

Automatic block, traffic control, train stop, train control and cab signal territory shall be designated in timetable instructions.

§ 236.16 Electric lock, main track releasing circuit.

When an electric lock releasing circuit is provided on the main track to permit a train or an engine to diverge from the main track without time delay, the circuit shall be of such length to permit occupancy of the circuit to be seen by a crew member stationed at the switch. When the releasing circuit extends into the fouling circuit, a train or engine on the siding shall be prevented from occupying the releasing circuit by a derail either pipe-connected to switch point or equipped with an independently operated electric lock.

[49 FR 3383, Jan. 26, 1984]

§ 236.17 Pipe for operating connections, requirements.

(a) Steel or wrought-iron pipe one inch or larger, or members of equal strength, shall be used for operating connections for switches, derails, movable-point frogs, facing-point locks, rail-locking devices of movable bridge protected by interlocking, and mechanically operated signals, except up-and-down rod which may be three-fourths inch pipe or solid rod. Pipe shall be fully screwed into coupling and both ends of each pipe shall be riveted to pipe plug with 2 rivets.

(b) Pipeline shall not be out of alignment sufficiently to interfere with proper operation, shall be properly

compensated for temperature changes, and supported on carriers spaced not more than 8 feet apart on tangent and curve of less than 2° and not more than 7 feet apart on curve of 2° or more. With lever in any position, couplings in pipe line shall not foul carriers.

[49 FR 3383, Jan. 26, 1984]

ROADWAY SIGNALS AND CAB SIGNALS

§ 236.21 Location of roadway signals.

Each roadway signal shall be positioned and aligned so that its aspects can be clearly associated with the track it governs.

[49 FR 3383, Jan. 26, 1984]

§ 236.22 Semaphore signal arm; clearance to other objects.

At least one-half inch clearance shall be provided between semaphore signal arm, and any object that may interfere with its operation.

§ 236.23 Aspects and indications.

(a) Aspects shall be shown by the position of semaphore blades, color of lights, position of lights, flashing of lights, or any combination thereof. They may be qualified by marker plate, number plate, letter plate, marker light, shape and color of semaphore blades or any combination thereof, subject to the following conditions:

(1) Night aspects of roadway signals, except qualifying appurtenances, shall be shown by lights; day aspects by lights or semaphore arms. A single white light shall not be used.

(2) Reflector lenses or buttons or other devices which depend for visibility upon reflected light from an external source shall not be used hereafter in night aspects, except qualifying appurtenances.

(b) The aspects of cab signals shall be shown by lights or by illuminated letters or numbers.

(c) Each aspect displayed by a signal shall be identified by a name and shall indicate action to be taken. Only one name and indication shall apply to those aspects indicating the same action to be taken; the same aspect shall not be used with any other name and indication.

(d) The fundamental indications of signal aspects shall conform to the following:

(1) A red light, a series of horizontal lights or a semaphore blade in a horizontal position shall be used to indicate stop.

(2) A yellow light, a lunar light, or a series of lights or a semaphore blade in the upper or lower quadrant at an angle of approximately 45 degrees to the vertical, shall be used to indicate that speed is to be restricted and stop may be required.

(3) A green light, a series of vertical lights, or a semaphore blade in a vertical position in the upper quadrant or 60° or 90° in the lower quadrant shall be used to indicate proceed at authorized speed.

(e) The names, indications, and aspects of roadway and cab signals shall be defined in the carrier's Operating Rule Book or Special Instructions. Modifications shall be filed with the FRA within thirty days after such modifications become effective.

(f) The absence of a qualifying appurtenance, the failure of a lamp in a light signal, or a false restrictive position of an arm of a semaphore signal shall not cause the display of a less restrictive aspect than intended.

[33 FR 19684, Dec. 25, 1968, as amended at 49 FR 3383, Jan. 26, 1984]

§ 236.24 Spacing of roadway signals.

Each roadway signal shall be located with respect to the next signal or signals in advance which govern train movements in the same direction so that the indication of a signal displaying a restrictive aspect can be complied with by means of a brake application, other than an emergency application, initiated at such signal, either by stopping at the signal where a stop is required, or by a reduction in speed to the rate prescribed by the next signal in advance where reduced speed is required.

§ 236.25 [Reserved]

§ 236.26 Buffing device, maintenance.

Buffing device shall be maintained so as not to cause the signal to display a less restrictive aspect than intended.

TRACK CIRCUITS

§236.51 Track circuit requirements.

Track relay controlling home signals shall be in deenergized position, or device that functions as a track relay controlling home signals shall be in its most restrictive state, and the track circuit of an automatic train stop, train control, or cab signal system shall be deenergized in the rear of the point where any of the following conditions exist:

(a) When a rail is broken or a rail or switch-frog is removed except when a rail is broken or removed in the shunt fouling circuit of a turnout or crossover, provided, however, that shunt fouling circuit may not be used in a turnout through which permissible speed is greater than 45 miles per hour. It shall not be a violation of this requirement if a track circuit is energized:

(1) When a break occurs between the end of rail and track circuit connector; within the limits of rail-joint bond, appliance or other protective device, which provides a bypath for the electric current, or

(2) As result of leakage current or foreign current in the rear of a point where a break occurs.

(b) When a train, locomotive, or car occupies any part of a track circuit, including fouling section of turnout except turnouts of hand-operated main track crossover. It shall not be a violation of this requirement where the presence of sand, rust, dirt, grease, or other foreign matter prevents effective shunting, except that where such conditions are known to exist adequate measures to safeguard train operation must be taken.

(c) Where switch shunting circuit is used:

(1) Switch point is not closed in normal position.

(2) A switch is not locked where facing-point lock with circuit controller is used.

(3) An independently operated fouling-point derail equipped with switch circuit controller is not in derailing position.

[33 FR 19684, Dec. 25, 1968, as amended at 49 FR 3383, Jan. 26, 1984]

§236.52 Relayed cut-section.

Where relayed cut-section is used in territory where noncoded direct-current track circuits are in use the energy circuit to the adjoining track shall be open and the track circuit shunted when the track relay at such cut-section is in deenergized position.

§236.53 Track circuit feed at grade crossing.

At grade crossing with an electric railroad where foreign current is present, the electric energy for noncoded direct current track circuit shall feed away from the crossing.

§236.54 Minimum length of track circuit.

When a track circuit shorter than maximum inner wheelbase of any locomotive or car operated over such track circuit is used for control of signaling facilities, other means shall be used to provide the equivalent of track circuit protection.

[49 FR 3383, Jan. 26, 1984]

§236.55 Dead section; maximum length.

Where dead section exceeds 35 feet, a special circuit shall be installed. Where shortest outer wheelbase of a locomotive operating over such dead section is less than 35 feet, the maximum length of the dead section shall not exceed the length of the outer wheelbase of such locomotive unless special circuit is used.

[49 FR 3383, Jan. 26, 1984]

§236.56 Shunting sensitivity.

Each track circuit controlling home signal or approach locking shall be so maintained that track relay is in deenergized position, or device that functions as a track relay shall be in its most restrictive state if, when track circuit is dry, a shunt of 0.06 ohm resistance is connected across the track rails of the circuit, including fouling sections of turnouts.

[49 FR 3383, Jan. 26, 1984]

§236.57 Shunt and fouling wires.

(a) Except as provided in paragraph (b) of this section, shunt wires and

fouling wires hereafter installed or replaced shall consist of at least two discrete conductors, and each shall be of sufficient conductivity and maintained in such condition that the track relay will be in deenergized position, or device that functions as a track relay will be in its most restrictive state, when the circuit is shunted.

(b) This rule does not apply to shunt wires where track or control circuit is opened by the switch circuit controller.

[49 FR 3383, Jan. 26, 1984]

§ 236.58 Turnout, fouling section.

Rail joints within the fouling section shall be bonded, and fouling section shall extend at least to a point where sufficient tract centers and allowance for maximum car overhang and width will prevent interference with train, locomotive, or car movement on the adjacent track.

[49 FR 3383, Jan. 26, 1984]

§ 236.59 Insulated rail joints.

Insulated rail joints shall be maintained in condition to prevent sufficient track circuit current from flowing between the rails separated by the insulation to cause a failure of any track circuit involved.

§ 236.60 Switch shunting circuit; use restricted.

Switch shunting circuit shall not be hereafter installed, except where tract or control circuit is opened by the circuit controller.

[49 FR 3384, Jan. 26, 1984]

WIRES AND CABLES

§ 236.71 Signal wires on pole line and aerial cable.

Signal wire on pole line shall be securely tied in on insulator properly fastened to crossarm or bracket supported by pole or other support. Signal wire shall not interfere with, or be interfered by, other wires on the pole line. Aerial cable shall be supported by messenger.

[49 FR 3384, Jan. 26, 1984]

§ 236.72 [Reserved]

§ 236.73 Open-wire transmission line; clearance to other circuits.

Open-wire transmission line operating at voltage of 750 volts or more shall be placed not less than 4 feet above the nearest crossarm carrying signal or communication circuits.

§ 236.74 Protection of insulated wire; splice in underground wire.

Insulated wire shall be protected from mechanical injury. The insulation shall not be punctured for test purposes. Splice in underground wire shall have insulation resistance at least equal to the wire spliced.

§ 236.75 [Reserved]

§ 236.76 Tagging of wires and interference of wires or tags with signal apparatus.

Each wire shall be tagged or otherwise so marked that it can be identified at each terminal. Tags and other marks of identification shall be made of insulating material and so arranged that tags and wires do not interfere with moving parts of apparatus.

[49 FR 3384, Jan. 26, 1984]

INSPECTIONS AND TESTS; ALL SYSTEMS

§ 236.101 Purpose of inspection and tests; removal from service of relay or device failing to meet test requirements.

The following inspections and tests shall be made in accordance with specifications of the carrier, subject to approval of the FRA, to determine if the apparatus and/or equipment is maintained in condition to perform its intended function. Electronic device, relay, or other electromagnetic device which fails to meet the requirements of specified tests shall be removed from service, and shall not be restored to service until its operating characteristics are in accordance with the limits within which such device or relay is designed to operate.

[49 FR 3384, Jan. 26, 1984]

§236.102 Semaphore or searchlight signal mechanism.

(a) Semaphore signal mechanism shall be inspected at least once every six months, and tests of the operating characteristics of all parts shall be made at least once every two years.

(b) Searchlight signal mechanism shall be inspected, and the mechanical movement shall be observed while operating the mechanism to all positions, at least once every six months. Tests of the operating characteristics shall be made at least once every two years.

[49 FR 3384, Jan. 26, 1984]

§236.103 Switch circuit controller or point detector.

Switch circuit controller, circuit controller, or point detector operated by hand-operated switch or by power-operated or mechanically-operated switch-and-lock movement shall be inspected and tested at least once every three months.

[49 FR 3384, Jan. 26, 1984]

§236.104 Shunt fouling circuit.

Shunt fouling circuit shall be inspected and tested at least once every three months.

§236.105 Electric lock.

Electric lock, except forced-drop type, shall be tested at least once every two years.

§236.106 Relays.

Each relay, the functioning of which affects the safety of train operations, shall be tested at least once every four years except:

(a) Alternating current centrifugal type relay shall be tested at least once every 12 months;

(b) Alternating current vane type relay and direct current polar type relay shall be tested at least once every 2 years; and

(c) Relay with soft iron magnetic structure shall be tested at least once every 2 years.

[49 FR 3384, Jan. 26, 1984]

§236.107 Ground tests.

(a) Except as provided in paragraph (b) of this section, a test for grounds on each energy bus furnishing power to circuits, the functioning of which affects the safety of train operation, shall be made when such energy bus is placed in service, and shall be made at least once every three months thereafter.

(b) The provisions of this rule shall not apply to track circuit wires, common return wires of grounded common single-break circuits, or alternating current power distribution circuits grounded in the interest of safety.

[49 FR 3384, Jan. 26, 1984]

§236.108 Insulation resistance tests, wires in trunking and cables.

(a) Insulation resistance of wires and cables, except wires connected directly to track rails, shall be tested when wires, cables, and insulation are dry. Insulation resistance tests shall be made between all conductors and ground, and between conductors in each multiple conductor cable, and between conductors in trunking, when wires or cables are installed and at least once every ten years thereafter.

(b) Then insulation resistance of wire or cable is found to be less than 500,000 ohms, prompt action shall be taken to repair or replace the defective wire or cable and until such defective wire or cable is replaced, insulation resistance test shall be made annually.

(c) In no case shall a circuit be permitted to function on a conductor having an insulation resistance to ground or between conductors of less than 200,000 ohms during the period required for repair or replacement.

[49 FR 3384, Jan. 26, 1984]

§236.109 Time releases, timing relays and timing devices.

Time releases, timing relays and timing devices shall be tested at least once every twelve months. The timing shall be maintained at not less than 90 percent of the predetermined time interval, which shall be shown on the plans or marked on the time release, timing relay, or timing device.

[49 FR 3384, Jan. 26, 1984]

§236.110 Results of tests.

Results of tests made in compliance with §§236.109 to 236.102, inclusive;

236.376 to 236.387, inclusive; 236.576; 236.577; and 236.586 to 236.589, inclusive, shall be recorded on preprinted or computerized forms provided by the railroad. Such forms shall show the name of the railroad, place and date, equipment tested, results of tests, repairs, replacements, adjustments made, and condition in which the apparatus was left. Each record shall be signed by the employee making the test and shall be filed in the office of a supervisory official having jurisdiction. Results of tests made in compliance with § 236.587 shall be retained for 92 days. Results of all other tests listed in this section shall be retained until the next record is filed but in no case less than one year.

[53 FR 37313, Sept. 26, 1988]

Subpart B—Automatic Block Signal Systems

STANDARDS

§ 236.201 Track-circuit control of signals.

The control circuits for home signal aspects with indications more favorable than ''proceed at restricted speed'' shall be controlled automatically by track circuits extending through the entire block.

§ 236.202 Signal governing movements over hand-operated switch.

Signal governing movements over hand-operated switch in the facing direction shall display its most restrictive aspect when the points are open one-fourth inch or more and, in the trailing direction, three-eighths inch or more, except that where a separate aspect is displayed for facing movements over the switch in the normal and in the reverse position, the signal shall display its most restrictive aspect when the switch points are open one-fourth inch or more from either the normal or reverse position.

§ 236.203 Hand operated crossover between main tracks; protection.

At hand-operated crossover between main tracks, protection shall be provided by one of the following:

(a) An arrangement of one or more track circuits and switch circuit controllers,

(b) Facing point locks on both switches of the crossover, with both locks operated by a single lever, or

(c) Electric locking of the switches of the crossover. Signals governing movements over either switch shall display their most restrictive aspect when any of the following conditions exist:

(1) Where protection is provided by one or more track circuits and switch circuit controllers, and either switch is open or the crossover is occupied by a train, locomotive or car in such a manner as to foul the main track. It shall not be a violation of this requirement where the presence of sand, rust, dirt, grease or other foreign matter on the rail prevents effective shunting;

(2) Where facing point locks with a single lever are provided, and either switch is unlocked;

(3) Where the switches are electrically locked, before the electric locking releases.

§ 236.204 Track signaled for movements in both directions, requirements.

On track signaled for movements in both directions, a train shall cause one or more opposing signals immediately ahead of it to display the most restrictive aspect, the indication of which shall be not more favorable than ''proceed at restricted speed.'' Signals shall be so arranged and controlled that if opposing trains can simultaneously pass signals displaying proceed aspects and the next signal in advance of each such signal then displays an aspect requiring a stop, or its most restrictive aspect, the distance between opposing signals displaying such aspects shall be not less than the aggregate of the stopping distances for movements in each direction. Where such opposing signals are spaced stopping distance apart for movements in one direction only, signals arranged to display restrictive aspects shall be provided in approach to at least one of the signals. Where such opposing signals are spaced less than stopping distance apart for movements in one direction, signals arranged to display restrictive aspects shall be provided in approach to both such signals.

In absolute permissive block signaling, when a train passes a head block signal, it shall cause the opposing head block signal to display an aspect with an indication not more favorable than ''stop.''

[33 FR 19684, Dec. 25, 1968, as amended at 49 FR 3384, Jan. 26, 1984]

§ 236.205 Signal control circuits; requirements.

The circuits shall be so installed that each signal governing train movements into a block will display its most restrictive aspect when any of the following conditions obtain within the block:

(a) Occupancy by a train, locomotive, or car,

(b) When points of a switch are not closed in proper position,

(c) When an independently operated fouling point derail equipped with switch circuit controller is not in derailing position,

(d) When a track relay is in de-energized position or a device which functions as a track relay is in its most restrictive state; or when signal control circuit is deenergized.

[33 FR 19684, Dec. 25, 1968, as amended at 49 FR 3385, Jan. 26, 1984]

§ 236.206 Battery or power supply with respect to relay; location.

The battery or power supply for each signal control relay circuit, where an open-wire circuit or a common return circuit is used, shall be located at the end of the circuit farthest from the relay.

§ 236.207 Electric lock on hand-operated switch; control.

Electric lock on hand-operated switch shall be controlled so that it cannot be unlocked until control circuits of signals governing movements over such switch have been opened. Approach or time locking shall be provided.

[49 FR 3385, Jan. 26, 1984]

Subpart C—Interlocking

STANDARDS

§ 236.301 Where signals shall be provided.

Signals shall be provided to govern train movements into and through interlocking limits, except that a signal shall not be required to govern movements over a hand-operated switch into interlocking limits if the switch is provided with an electric lock and a derail at the clearance point, either pipe-connected to the switch or independently locked, electrically. Electric locks installed under this rule must conform to the time and approach locking requirements of Rule 314 (without reference to the 20-mile exceptions), and those of either Rule 760 or Rule 768, as may be appropriate.

§ 236.302 Track circuits and route locking.

Track circuits and route locking shall be provided and shall be effective when the first pair of wheels of a locomotive or a car passes a point not more than 13 feet in advance of the signal governing its movement, measured from the center of the mast, or if there is no mast, from the center of the signal.

[49 FR 3385, Jan. 26, 1984]

§ 236.303 Control circuits for signals, selection through circuit controller operated by switch points or by switch locking mechanism.

The control circuit for each aspect with indication more favorable than ''proceed at restricted speed'' of power operated signal governing movements over switches, movable-point frogs and derails shall be selected through circuit controller operated directly by switch points or by switch locking mechanism, or through relay controlled by such circuit controller, for each switch, movable-point frog, and derail in the routes governed by such signal. Circuits shall be arranged so that such signal can display an aspect more favorable than ''proceed at restricted speed,'' only when each switch, movable-point frog, and derail in the route is in proper position.

§ 236.304 Mechanical locking or same protection effected by circuits.

Mechanical locking, or the same protection effected by means of circuits, shall be provided.

§ 236.305 Approach or time locking.

Approach or time locking shall be provided in connection with signals displaying aspects with indications more favorable than ''proceed at restricted speed.''

§ 236.306 Facing point lock or switch-and-lock movement.

Facing point lock or switch-and-lock movement shall be provided for mechanically operated switch, movable-point frog, or split-point derail.

§ 236.307 Indication locking.

Indication locking shall be provided for operative approach signals of the semaphore type, power-operated home signals, power-operated switches, movable-point frogs and derails, and for all approach signals except light signals, all aspects of which are controlled by polar or coded track circuits or line circuits so arranged that a single fault will not permit a more favorable aspect than intented to be displayed.

[49 FR 3385, Jan. 26, 1984]

§ 236.308 Mechanical or electric locking or electric circuits; requisites.

Mechanical or electric locking or electric circuits shall be installed to prevent signals from displaying aspects which permit conflicting movements except that opposing signals may display an aspect indicating proceed at restricted speed at the same time on a track used for switching movements only, by one train at a time. Manual interlocking in service as of the date of this part at which opposing signals on the same track are permitted simultaneously to display aspects authorizing conflicting movements when interlocking is unattended, may be continued, provided that simultaneous train movements in opposite directions on the same track between stations on either side of the interlocking are not permitted.

NOTE: Relief from the requirement of this section will be granted upon an adequate showing by an individual carrier to allow opposing signals on the same track simultaneously to display aspects to proceed through an interlocking which is unattended, provided that train movements in opposite directions on the same track between stations on either site of the interlocking are not permitted at the same time.

§ 236.309 Loss of shunt protection; where required.

(a) A loss of shunt of 5 seconds or less shall not permit an established route to be changed at an automatic interlocking.

(b) A loss of shunt of 5 seconds or less shall not permit the release of the route locking circuit of each power-operated switch hereafter installed.

[49 FR 3385, Jan. 26, 1984]

§ 236.310 Signal governing approach to home signal.

A signal shall be provided on main track to govern the approach with the current of traffic to any home signal except where the home signal is the first signal encountered when leaving yards or stations and authorized speed approaching such signal is not higher than slow speed. When authorized speed between home signals on route governed is 20 miles per hour or less, an inoperative signal displaying an aspect indicating ''approach next signal prepared to stop'' may be used to govern the approach to the home signal.

§ 236.311 Signal control circuits, selection through track relays or devices functioning as track relays and through signal mechanism contacts and time releases at automatic interlocking.

(a) The control circuits for aspects with indications more favorable than ''proceed at restricted speed'' shall be selected through track relays, or through devices that function as track relays, for all track circuits in the route governed.

(b) At automatic interlocking, signal control circuits shall be selected (1) through track relays, or devices that function as track relays, for all track circuits in the route governed and in all conflicting routes within the interlocking; (2) through signal mechanism contacts or relay contacts closed when

signals for such conflicting routes display ''stop'' aspects; and (3) through normal contacts of time releases, time element relays, or timing devices for such conflicting routes, or contacts of relays repeating the normal position or normal state of such time releases, time element relays, or timing devices.

[49 FR 3385, Jan. 26, 1984]

§ 236.312 Movable bridge, interlocking of signal appliances with bridge devices.

When movable bridge is protected by interlocking the signal appliances shall be so interlocked with bridge devices that before a signal governing movements over the bridge can display an aspect to proceed the bridge must be locked and the track alined, with the bridge locking members within one inch of their proper positions and with the track rail on the movable span within three-eighths inch of correct surface and alinement with rail seating device on bridge abutment or fixed span. Emergency bypass switches and devices shall be locked or sealed.

[33 FR 19684, Dec. 25, 1968, as amended at 49 FR 3385, Jan. 26, 1984]

§ 236.313 [Reserved]

§ 236.314 Electric lock for hand-operated switch or derail.

Electric lock shall be provided for each hand-operated switch or derail within interlocking limits, except where train movements are made at not exceeding 20 miles per hour. At manually operated interlocking it shall be controlled by operator of the machine and shall be unlocked only after signals governing movements over such switch or derail display aspects indicating stop. Approach or time locking shall be provided.

RULES AND INSTRUCTIONS

§ 236.326 Mechanical locking removed or disarranged; requirement for permitting train movements through interlocking.

When mechanical locking of interlocking machine is being changed or is removed from the machine, or locking becomes disarranged or broken, unless protection equivalent to mechanical locking is provided by electric locking or electric circuits, train movements through the interlocking shall not be permitted until each switch, movable-point frog or derail in the route is spiked, clamped or blocked in proper position so that it cannot be moved by its controlling lever, and then train movements shall not exceed restricted speed until the interlocking is restored to normal operation. It will not be necessary to comply with this requirement at interlockings where protection is in service in accordance with section 303, provided that the signal controls are arranged so that the signals cannot display an aspect the indication of which is less restrictive than ''proceed at restricted speed.''

§ 236.327 Switch, movable-point frog or split-point derail.

Switch, movable-point frog, or split-point derail equipped with lock rod shall be maintained so that it can not be locked when the point is open three-eighths inch or more.

[49 FR 3385, Jan. 26, 1984]

§ 236.328 Plunger of facing-point lock.

Plunger of lever operated facing-point lock shall have at least 8-inch stroke. When lock lever is in unlocked position the end of the plunger shall clear the lock rod not more than one inch.

§ 236.329 Bolt lock.

Bolt lock shall be so maintained that signal governing movements over switch or derail and displaying an aspect indicating stop cannot be operated to display a less restrictive aspect while derail is in derailing position, or when switch point is open one-half inch or more.

§ 236.330 Locking dog of switch-and-lock movement.

Locking dog of switch-and-lock movement shall extend through lock rod one-half inch or more in either normal or reverse position.

§§ 236.331—236.333 [Reserved]

§ 236.334 Point detector.

Point detector shall be maintained so that when switch mechanism is locked

in normal or reverse position, contacts cannot be opened by manually applying force at the closed switch point. Point detector circuit controller shall be maintained so that the contacts will not assume the position corresponding to switch point closure if the switch point is prevented by an obstruction, from closing to within one-fourth inch where latch-out device is not used, and to within three-eighths inch where latch-out device is used.

§ 236.335 Dogs, stops and trunnions of mechanical locking.

Driving pieces, dogs, stops and trunnions shall be rigidly secured to locking bars. Swing dogs shall have full and free movement. Top plates shall be maintained securely in place.

§ 236.336 Locking bed.

The various parts of the locking bed, locking bed supports, and tappet stop rail shall be rigidly secured in place and alined to permit free operation of locking.

§ 236.337 Locking faces of mechanical locking; fit.

Locking faces shall fit squarely against each other with a minimum engagement when locked of at least one-half the designed locking face.

§ 236.338 Mechanical locking required in accordance with locking sheet and dog chart.

Mechanical locking shall be in accordance with locking sheet and dog chart currently in effect.

§ 236.339 Mechanical locking, maintenance requirements.

Locking and connections shall be maintained so that, when a lever or latch is mechanically locked the following will be prevented:

(a) *Mechanical machine.* (1) Latch-operated locking. Raising lever latch block so that bottom thereof is within three-eighths inch of top of quadrant.

(2) Lever-operated locking. Moving lever latch block more than three-eighths inch on top of quadrant.

(b) *Electromechanical machine.* (1) Lever moving in horizontal plant. Moving lever more than five-sixteenths inch when in normal position or more than nine-sixteenths inch when in reverse position.

(2) Lever moving in arc. Moving lever more than 5 degrees.

(c) *Power machine.* (1) Latch-operated locking. Raising lever latch block to that bottom thereof is within seven thirty-seconds inch of top of quadrant.

(2) Lever moving in horizontal plane. Moving lever more than five-sixteenths inch when in normal position or more than nine-sixteenths inch when in reverse position.

(3) Lever moving in arc. Moving lever more than 5 degrees.

§ 236.340 Electromechanical interlocking machine; locking between electrical and mechanical levers.

In electro-mechanical interlocking machine, locking between electric and mechanical levers shall be maintained so that mechanical lever cannot be operated except when released by electric lever.

§ 236.341 Latch shoes, rocker links, and quadrants.

Latch shoes, rocker links, and quadrants of Saxby and farmer machines shall be maintained so that locking will not release if a downward force not exceeding a man's weight is exerted on the rocker while the lever is in the mid-stroke position.

§ 236.342 Switch circuit controller.

Switch circuit controller connected at the point to switch, derail, or movable-point frog, shall be maintained so that its contacts will not be in position corresponding to switch point closure when switch point is open one-fourth inch or more.

INSPECTION AND TESTS

§ 236.376 Mechanical locking.

Mechanical locking in interlocking machine shall be tested when new locking is installed; and thereafter when change in locking is made, or locking becomes disarranged, or tested at least once every two years, whichever shall occur first.

[49 FR 3385, Jan. 26, 1984]

§ 236.377 Approach locking.

Approach locking shall be tested when placed in service and thereafter when modified, disarranged, or at least once every two years, whichever shall occur first.

[49 FR 3385, Jan. 26, 1984]

§ 236.378 Time locking.

Time locking shall be tested when placed in service and thereafter when modified, disarranged, or at least once every two years, whichever shall occur first.

[49 FR 3385, Jan. 26, 1984]

§ 236.379 Route locking.

Route locking or other type of switch locking shall be tested when placed in service and thereafter when modified, disarranged, or at least once every two years, whichever shall occur first.

[49 FR 3385, Jan. 26, 1984]

§ 236.380 Indication locking.

Indication locking shall be tested when placed in service and thereafter when modified, disarranged, or at least once every two years, whichever shall occur first.

[49 FR 3385, Jan. 26, 1984]

§ 236.381 Traffic locking.

Traffic locking shall be tested when placed in service and thereafter when modified, disarranged, or at least once every two years, whichever shall occur first.

[49 FR 3385, Jan. 26, 1984]

§ 236.382 Switch obstruction test.

Switch obstruction test of lock rod of each power-operated switch and lock rod of each hand-operated switch equipped with switch-and-lock-movement shall be made when lock rod is placed in service or changed out, but not less than once each month.

[49 FR 3385, Jan. 26, 1984]

§ 236.383 Valve locks, valves, and valve magnets.

Valve locks on valves of the non-cut-off type shall be tested at least once every three months, and valves and valve magnets shall be tested at least once every year.

[49 FR 3385, Jan. 26, 1984]

§ 236.384 Cross protection.

Cross protection shall be tested at least once every six months.

[49 FR 3385, Jan. 26, 1984]

§ 236.385 [Reserved]

§ 236.386 Restoring feature on power switches.

Restoring feature on power switches shall be tested at least once every three months.

§ 236.387 Movable bridge locking.

Movable bridge locking shall be tested at least once a year.

Subpart D—Traffic Control Systems

STANDARDS

§ 236.401 Automatic block signal system and interlocking standards applicable to traffic control systems.

The standards prescribed in §§ 236.201, to 236.203, inclusive, §§ 236.205, 236.206, 236.303, 236.307 and 236.309 to 236.311, inclusive, shall apply to traffic control systems.

[49 FR 3385, Jan. 26, 1984]

§ 236.402 Signals controlled by track circuits and control operator.

The control circuits for home signal aspects with indications more favorable than ''proceed at restricted speed'' shall be controlled by track circuits extending through entire block. Also in addition, at controlled point they may be controlled by control operator, and, at manually operated interlocking, they shall be controlled manually in cooperation with control operator.

§ 236.403 Signals at controlled point.

Signals at controlled point shall be so interconnected that aspects to proceed cannot be displayed simultaneously for conflicting movements, except that opposing signals may display an aspect indicating ''proceed at restricted speed'' at the same time on a

track used for switching movements only, by one train at a time.

[49 FR 3386, Jan. 26, 1984]

§ 236.404 Signals at adjacent control points.

Signals at adjacent controlled points shall be so interconnected that aspects to proceed on tracks signaled for movements at greater than restricted speed cannot be displayed simultaneously for conflicting movements.

§ 236.405 Track signaled for movements in both directions, change of direction of traffic.

On track signaled for movements in both directions, occupancy of the track between opposing signals at adjacent controlled points shall prevent changing the direction of traffic from that which obtained at the time the track became occupied, except that when a train having left one controlled point reaches a section of track immediately adjacent to the next controlled point at which switching is to be performed, an aspect permitting movement at not exceeding restricted speed may be displayed into the occupied block.

§ 236.406 [Reserved]

§ 236.407 Approach or time locking; where required.

Approach or time locking shall be provided for all controlled signals where route or direction of traffic can be changed.

[49 FR 3386, Jan. 26, 1984]

§ 236.408 Route locking.

Route locking shall be provided where switches are power-operated. Route locking shall be effective when the first pair of wheels of a locomotive or car passes a point not more than 13 feet in advance of the signal governing its movement, measured from the center of the signal mast or, if there is no mast, from the center of the signal.

[49 FR 3386, Jan. 26, 1984]

§ 236.409 [Reserved]

§ 236.410 Locking, hand-operated switch; requirements.

(a) Each hand-operated switch in main track shall be locked either electrically or mechanically in normal position, except:

(1) Where train speeds over the switch do not exceed 20 miles per hour;

(2) Where trains are not permitted to clear the main track;

(3) Where a signal is provided to govern train movements from the auxiliary track to the signaled track; or

(4) On a signaled siding without intermediate signals where the maximum authorized speed on the siding does not exceed 30 miles per hour.

(b) Approach or time locking shall be provided and locking may be released either automatically, or by the control operator, but only after the control circuits of signals governing movement in either direction over the switch and which display aspects with indications more favorable than ''proceed at restricted speed'' have been opened directly or by shunting of track circuit.

NOTE: Each carrier subject to this rule is hereby authorized to remove electrical or mechanical locks now installed within the purview of § 236.410 when either exception (1) or (2) of the present rule is satisfied, subject to the condition that the following procedures and actions be accomplished:

1. Each carrier intending to remove a lock under the findings made herein and based on the existence of one or more of the circumstances as set forth in exception (1) or (2) as contained in the revised section, shall:

(a) Notify the FRA by letter setting forth the location of the lock involved and the specific exception on which removal is based.

(b) Include in the letter to the FRA an assurance that the excepting circumstance relied upon will not be changed without either reinstallation of the electric or mechanical lock, or approval by the FRA of the changed circumstances.

(c) Publish in its Time Table the not-to-exceed 20 miles per hour speed limit covering the area of the switch, when that is the exception relied upon; or, where exception (2) is relied upon, publish either in the Special Instructions part of its Time Table or in separate printed Special Instructions the location of each hand-operated switch where electric or mechanical lock is removed and,

where train movements are made in excess of twenty (20) miles per hour, concurrently issuing specific instructions, by stating therein, that trains are not to be permitted to clear the main track at such switch.

2. Following the foregoing, and upon acknowledgment of the letter to the FRA, such acknowledgment to be made promptly as an administrative action by the FRA's Bureau of Railroad Safety, and such acknowledging letter to be retained by the carrier as authority for the removal and as a record of the exception on which relied, the lock may then be removed.

(c) Where a signal is used in lieu of electric or mechanical lock to govern movements from auxiliary track to signaled track, the signal shall not display an aspect to proceed until after the control circuits of signals governing movement on main track in either direction over the switch have been opened, and either the approach locking circuits to the switch are unoccupied or a predetermined time interval has expired.

NOTE: Railroads shall bring all hand-operated switches that are not electrically or mechanically locked and that do not conform to the requirements of this section on the effective date of this part into conformity with this section in accordance with the following schedule:

Not less than 33% during calendar year 1984.

Not less than 66% during calendar year 1985.

The remainder during calendar year 1986.

[33 FR 19684, Dec. 25, 1968, as amended at 49 FR 3386, Jan. 26, 1984]

RULES AND INSTRUCTIONS

§ 236.426 Interlocking rules and instructions applicable to traffic control systems.

The rules and instructions prescribed in §§ 236.327 and 236.328, § 236.330 to § 236.334, inclusive, and § 236.342 shall apply to traffic control systems.

INSPECTION AND TESTS

§ 236.476 Interlocking inspections and tests applicable to traffic control systems.

The inspections and tests prescribed in §§ 236.377 to 236.380, inclusive, and §§ 236.382, 236.383, and 236.386 shall apply to traffic control systems.

[49 FR 3386, Jan. 26, 1984]

Subpart E—Automatic Train Stop, Train Control and Cab Signal Systems

STANDARDS

§ 236.501 Forestalling device and speed control.

(a) An automatic train stop system may include a device by means of which the automatic application of the brakes can be forestalled.

(b) Automatic train control system shall include one or more of the following features:

(1) Low-speed restriction, requiring the train to proceed under slow speed after it has either been stopped by an automatic application of the brakes, or under control of the engineman, its speed has been reduced to slow speed, until the apparatus is automatically restored to normal because the condition which caused the restriction no longer affects the movement of the train.

(2) Medium-speed restriction, requiring the train to proceed under medium speed after passing a signal displaying an approach aspect or when approaching a signal requiring a stop, or a stop indication point, in order to prevent an automatic application of the brakes.

NOTE: Relief from the requirements of paragraphs (b) (1) and (2) of this section will be granted, insofar as speed limits fixed by definitions of Slow and Medium speeds are concerned, upon an adequate showing by an individual carrier where automatic train control systems now in service enforce speed restrictions higher than those required by definitions in §§ 236.700 to 236.838 inclusive.

(3) Maximum-speed restriction, effecting an automatic brake application whenever the predetermined maximum speed limit is exceeded.

§ 236.502 Automatic brake application, initiation by restrictive block conditions stopping distance in advance.

An automatic train-stop or train-control system shall operate to initiate an automatic brake application at

least stopping distance from the entrance to a block, wherein any condition described in § 236.205 obtains, and at each main track signal requiring a reduction in speed.

§ 236.503 Automatic brake application; initiation when predetermined rate of speed exceeded.

An automatic train control system shall operate to initiate an automatic brake application when the speed of the train exceeds the predetermined rate as required by the setting of the speed control mechanism.

§ 236.504 Operation interconnected with automatic block-signal system.

(a) A continuous inductive automatic train stop or train control system shall operate in connection with an automatic block signal system and shall be so interconnected with the signal system as to perform its intended function in event of failure of the engineer to acknowledge or obey a restrictive wayside signal or a more restrictive cab signal.

(b) An intermittent inductive automatic train stop system shall operate in connection with an automatic block signal system and shall be so interconnected with the signal system that the failure of the engineer to acknowledge a restrictive wayside signal will cause the intermittent inductive automatic train stop system to perform its intended function.

[49 FR 3386, Jan. 26, 1984]

§ 236.505 Proper operative relation between parts along roadway and parts on locomotive.

Proper operative relation between the parts along the roadway and the parts on the locomotive shall obtain under all conditions of speed, weather, wear, oscillation, and shock.

§ 236.506 Release of brakes after automatic application.

The automatic train stop or train control apparatus shall prevent release of the brakes after automatic application until a reset device has been operated, or the speed of the train has been reduced to a predetermined rate, or the condition that caused the brake application no longer affects the movement of the train. If reset device is used it shall be arranged so that the brakes cannot be released until the train has been stopped, or it shall be located so that it cannot be operated by engineman without leaving his accustomed position in the cab.

§ 236.507 Brake application; full service.

The automatic train stop or train control apparatus shall, when operated, cause a full service application of the brakes.

§ 236.508 Interference with application of brakes by means of brake valve.

The automatic train stop, train control, or cab signal apparatus shall be so arranged as not to interfere with the application of the brakes by means of the brake valve and not to impair the efficiency of the brake system.

[49 FR 3386, Jan. 26, 1984]

§ 236.509 Two or more locomotives coupled.

The automatic train stop, train control or cab signal apparatus shall be arranged so that when two or more locomotives are coupled, or a pushing or helping locomotive is used, it can be made operative only on the locomotive from which the brakes are controlled.

§ 236.510 [Reserved]

§ 236.511 Cab signals controlled in accordance with block conditions stopping distance in advance.

The automatic cab signal system shall be arranged so that cab signals will be continuously controlled in accordance with conditions described in § 236.205 that obtain at least stopping distance in advance.

§ 236.512 Cab signal indication when locomotive enters block where restrictive conditions obtain.

The automatic cab signal system shall be arranged so that when a locomotive enters or is within a block, wherein any condition described in § 236.205 obtains, the cab signals shall indicate ''Proceed at Restricted Speed.''

§ 236.513 Audible indicator.

(a) The automatic cab signal system shall be so arranged that when the cab signal changes to display a more restrictive aspect, an audible indicator will sound continuously until silenced by manual operation of an acknowledging device.

(b) The audible cab indicator of automatic cab signal, automatic train stop, or automatic train control system shall have a distinctive sound and be clearly audible throughout the cab under all operating conditions.

[49 FR 3386, Jan. 26, 1984]

§ 236.514 Interconnection of cab signal system with roadway signal system.

The automatic cab signal system shall be interconnected with the roadway-signal system so that the cab signal indication will not authorize operation of the train at a speed higher than that authorized by the indication of the roadway signal that governed the movement of a train into a block except when conditions affecting movement of trains in the block change after the train passes the signal.

§ 236.515 Visibility of cab signals.

The cab signals shall be plainly visible to member or members of the locomotive crew from their stations in the cab.

[49 FR 3386, Jan. 26, 1984]

§ 236.516 Power supply.

Automatic cab signal, train stop, or train control device hereafter installed shall operate from a separate or isolated power supply.

[49 FR 3386, Jan. 26, 1984]

RULES AND INSTRUCTIONS; ROADWAY

§ 236.526 Roadway element not functioning properly.

When a roadway element except track circuit of automatic train stop, train control or cab signal system is not functioning as intended, the signal associated with such roadway element shall be caused manually to display its most restrictive aspect until such element has been restored to normal operative condition.

§ 236.527 Roadway element insulation resistance.

Insulation resistance between roadway inductor and ground shall be maintained at not less than 10,000 ohms.

[49 FR 3386, Jan. 26, 1984]

§ 236.528 Restrictive condition resulting from open hand-operated switch; requirement.

When a facing point hand-operated switch is open one-fourth inch or more, a trailing point hand-operated switch three-eighths inch or more, or hand-operated switch is not locked where facing point lock with circuit controller is used, the resultant restrictive condition of an automatic train stop or train control device of the continuous type or the resultant restrictive cab signal indication of an automatic cab signal device on an approaching locomotive shall be maintained to within 300 feet of the points of the switch.

§ 236.529 Roadway element inductor; height and distance from rail.

Inductor of the inert roadway element type shall be maintained with the inductor pole faces at a height above the plane of the tops of the rails, and with its inner edge at a hmrizontal distance from the gage side of the nearest running rail, in accordance with specifications of the carrier.

[49 FR 3386, Jan. 26, 1984]

§ 236.530 [Reserved]

§ 236.531 Trip arm; height and distance from rail.

Trip arm of automatic train stop device when in the stop position shall be maintained at a height above the plane of the tops of the rails, and at a horizontal distance from its center line to gage side of the nearest running rail, in accordance with specifications of the carrier.

[49 FR 3386, Jan. 26, 1984]

§ 236.532 Strap iron inductor; use restricted.

No railroad shall use strap iron inductor or other roadway element with characteristics differing from its standard type on track where speed

higher than restricted speed is permitted.

[49 FR 3386, Jan. 26, 1984]

§ 236.533 [Reserved]

§ 236.534 Entrance to equipped territory; requirements.

Where trains are not required to stop at the entrance to equipped territory, except when leaving yards and stations and speed until entering equipped territory does not exceed restricted speed, the automatic train stop, train control, or cab signal device shall be operative at least stopping distance from the entrance to such territory except where the approach thereto is governed by automatic approach signal.

RULES AND INSTRUCTIONS; LOCOMOTIVES

§ 236.551 Power supply voltage; requirement.

The voltage of power supply shall be maintained within 10 percent of rated voltage.

§ 236.552 Insulation resistance; requirement.

When periodic test prescribed in § 236.588 is performed, insulation resistance between wiring and ground of continuous inductive automatic cab signal system, automatic train control system, or automatic train stop system shall be not less than one megohm, and that of an intermittent inductive automatic train stop system, not less than 250,000 ohms. Insulation resistance values between periodic tests shall be not less than 250,000 ohms for a continuous inductive automatic cab signal system, automatic train control system, or automatic train stop system, and 20,000 ohms for an intermittent inductive automatic train stop system.

[49 FR 3387, Jan. 26, 1984]

§ 236.553 Seal, where required.

Seal shall be maintained on any device other than brake-pipe cut-out cock (double-heading cock), by means of which the operation of the pneumatic portion of automatic train-stop or train-control apparatus can be cut out.

§ 236.554 Rate of pressure reduction; equalizing reservoir or brake pipe.

The equalizing-reservoir pressure or brake-pipe pressure reduction during an automatic brake application shall be at a rate not less than that which results from a manual service application.

§ 236.555 Repaired or rewound receiver coil.

Receiver coil which has been repaired or rewound shall have the same operating characteristics which it possessed originally or as currently specified for new equipment.

§ 236.556 Adjustment of relay.

Change in adjustment of relay shall be made only in a shop equipped for that purpose except when receiver coils, electro-pneumatic valve, or other essential part of the equipment is replaced. Irregularities in power-supply voltage or other variable factors in the circuit shall not be compensated for by adjustment of the relay.

§ 236.557 Receiver; location with respect to rail.

(a) Receiver of intermittent inductive automatic train stop device of the inert roadway element type shall be maintained with bottom of the receiver at a height above the plane of the tops of the rails, and with its outer edge at a horizontal distance from the gage side of the nearest rail, in accordance with specifications of the carrier.

(b) Receiver of continuous inductive automatic cab signal, train stop, or train control device of locomotive equipped with onboard test equipment, shall be maintained with the bottom of the receiver at a height above the plane of the tops of the rails, and with its outer edge at a horizontal distance from the gage side of the nearest rail, in accordance with specifications of the carrier.

[49 FR 3387, Jan. 26, 1984]

§§ 236.558—236.559 [Reserved]

§ 236.560 Contact element, mechanical trip type; location with respect to rail.

Contact element of automatic train stop device of the mechanical trip type

shall be maintained at a height above the plane of the tops of the rails, and at a horizontal distance from the gage side of the rail, in accordance with specifications of the carrier.

[49 FR 3387, Jan. 26, 1984]

§ 236.561 [Reserved]

§ 236.562 Minimum rail current required.

The minimum rail current required to restore the locomotive equipment of continuous inductive automatic train stop or train control device to normal condition or to obtain a proceed indication of automatic cab signal device (pick-up) shall be in accordance with specifications of the carrier.

[49 FR 3387, Jan. 26, 1984]

§ 236.563 Delay time.

Delay time of automatic train stop or train control system shall not exceed 8 seconds and the spacing of signals to meet the requirements of § 236.24 shall take into consideration the delay time.

§ 236.564 Acknowledging time.

Acknowledging time of intermittent automatic train-stop device shall be not more than 30 seconds.

§ 236.565 Provision made for preventing operation of pneumatic brake-applying apparatus by double-heading cock; requirement.

Where provision is made for preventing the operation of the pneumatic brake-applying appartus of an automatic train stop or train control device when the double-heading cock is placed in double-heading position, the automatic train stop or train control device shall not be cut out before communication is closed between the engineman's automatic brake valve and the brake pipe, when operating double-heading cock toward double-heading position.

§ 236.566 Locomotive of each train operating in train stop, train control or cab signal territory; equipped.

The locomotive from which brakes are controlled, of each train operating in automatic train stop, train control, or cab signal territory shall be equipped with apparatus responsive to the roadway equipment installed on all or any part of the route traversed, and such apparatus shall be in operative condition.

§ 236.567 Restrictions imposed when device fails and/or is cut out en route.

Where an automatic train stop, train control, or cab signal device fails and/or is cut out enroute, train may proceed at restricted speed or if an automatic block signal system is in operation according to signal indication but not to exceed medium speed, to the next available point of communication where report must be made to a designated officer. Where no automatic block signal system is in use train shall be permitted to proceed at restricted speed or where automatic block signal system is in operation according to signal indication but not to exceed medium speed to a point where absolute block can be established. Where an absolute block is established in advance of the train on which the device is inoperative train may proceed at not to exceed 79 miles per hour.

§ 236.568 Difference between speeds authorized by roadway signal and cab signal; action required.

If for any reason a cab signal authorizes a speed different from that authorized by a roadway signal, when a train enters the block governed by such roadway signal, the lower speed shall not be exceeded.

INSPECTION AND TESTS; ROADWAY

§ 236.576 Roadway element.

Roadway elements, except track circuits, including those for test purposes, shall be gaged monthly for height and alinement, and shall be tested at least every 6 months.

§ 236.577 Test, acknowledgement, and cut-in circuits.

Test, acknowledgement, and cut-in circuits shall be tested at least once every twelve months.

[49 FR 3387, Jan. 26, 1984]

INSPECTION AND TESTS; LOCOMOTIVE

§ 236.586 Daily or after trip test.

(a) Except where tests prescribed by § 236.588 are performed at intervals of not more than 2 months, each locomotive equipped with an automatic cab signal or train stop or train control device operating in equipped territory shall be inspected for damage to the equipment and tested at least once each calendar day or within 24 hours before departure upon each trip.

(b) Each equipped locomotive shall be tested to determine the locomotive equipment is responsive to the wayside equipment and shall be cycled to determine the device functions as intended.

(c) Each locomotive equipped with intermittent inductive automatic train stop or non-coded continuous inductive automatic train stop or non-coded continuous inductive automatic train control device shall be tested to determine that the pickup of the device is within specified limits.

[49 FR 3387, Jan. 26, 1984]

§ 236.587 Departure test.

(a) The automatic train stop, train control, or cab signal apparatus on each locomotive, except a locomotive or a multiple-unit car equipped with mechanical trip stop, shall be tested using one of the following methods:

(1) Operation over track elements;

(2) Operation over test circuit;

(3) Use of portable test equipment; or

(4) Use of onboard test device.

(b) The test shall be made on departure of the locomotive from its initial terminal unless that apparatus will be cut out between the initial terminal and the equipped territory. If the apparatus is cut out between the initial terminal and the equipped territory the test shall be made prior to entering equipped territory.

(c) If a locomotive makes more than one trip in any 24-hour period, only one departure test is required in such 24-hour period.

(d)(1) Whoever performs the test shall certify in writing that such test was properly performed. The certification and the test results shall be posted in the cab of the locomotive and a copy of the certification and test results left at the test location for filing in the office of the supervisory official having jurisdiction.

(2) If it is impractical to leave a copy of the certification and test results at the location of the test, the test results shall be transmitted to either (i) the dispatcher or (ii) one other designated individual at each location, who shall keep a written record of the test results and the name of the person performing the test. These records shall be retained for at least 92 days.

[49 FR 3387, Jan. 26, 1984, as amended at 53 FR 37313, Sept. 26, 1988]

EFFECTIVE DATE NOTE: At 49 FR 3387, Jan. 26, 1984, § 236.587 was revised. This section contains information collection and recordkeeping requirements and will not become effective until approval has been given by the Office of Management and Budget.

§ 236.588 Periodic test.

Except as provided in § 236.586, periodic test of the automatic train stop, train control, or cab signal apparatus shall be made at least once every 92 days, and on multiple-unit cars as specified by the carrier, subject to approval by the FRA.

[49 FR 3387, Jan. 26, 1984]

§ 236.589 Relays.

(a) Each relay shall be removed from service, subjected to thorough test, necessary repairs and adjustments made, and shall not be replaced in service unless its operating characteristics are in accordance with the limits within which such relay is designed to operate, as follows:

(1) Master or primary relays of torque type depending on spring tension to return contacts to deenergized position in noncoded continuous inductive automatic train stop or train control system, at least once every two years; and

(2) All other relays, at least once every six years.

(b) [Reserved]

[49 FR 3387, Jan. 26, 1984]

§ 236.590 Pneumatic apparatus.

Automatic train stop, train control, or cab signal pneumatic apparatus shall be inspected, cleaned, and the results of such inspection recorded as

provided by §229.29(a). When a locomotive with automatic train stop, train control, or cab signal pneumatic apparatus receives out-of-use credit pursuant to §229.33, the automatic train stop, train control, or cab signal apparatus shall be tested in accordance with §236.588 prior to the locomotive being placed in service.

[61 FR 33873, July 1, 1996]

Subpart F—Dragging Equipment and Slide Detectors and Other Similar Protective Devices

STANDARDS

§236.601 Signals controlled by devices; location.

Signals controlled by devices used to provide protection against unusual contingencies, such as landslides, dragging equipment, burned bridges or trestles and washouts shall be located so that stopping distance will be provided between the signal and the point where it is necessary to stop the train.

Subpart G—Definitions

§236.700 Definitions.

For the purpose of these rules, standards, and instructions, the following definitions will apply.

§236.701 Application, brake; full service.

An application of the brakes resulting from a continuous or a split reduction in brake pipe pressure at a service rate until maximum brake cylinder pressure is developed. As applied to an automatic or electro-pneumatic brake with speed governor control, an application other than emergency which develops the maximum brake cylinder pressure, as determined by the design of the brake equipment for the speed at which the train is operating.

§236.702 Arm, semaphore.

The part of a semaphore signal displaying an aspect. It consists of a blade fastened to a spectacle.

§236.703 Aspect.

The appearance of a roadway signal conveying an indication as viewed from the direction of an approaching train; the appearance of a cab signal conveying an indication as viewed by an observer in the cab.

§236.704 [Reserved]

§236.705 Bar, locking.

A bar in an interlocking machine to which the locking dogs are attached.

§236.706 Bed, locking.

That part of an interlocking machine that contains or holds the tappets, locking bars, crosslocking, dogs and other apparatus used to interlock the levers.

§236.707 Blade, semaphore.

The extended part of a semaphore arm which shows the position of the arm.

§236.708 Block.

A length of track of defined limits, the use of which by trains is governed by block signals, cab signals, or both.

§236.709 Block, absolute.

A block in which no train is permitted to enter while it is occupied by another train.

§236.710 Block, latch.

The lower extremity of a latch rod which engages with a square shoulder of the segment or quadrant to hold the lever in position.

§236.711 Bond, rail joint.

A metallic connection attached to adjoining rails to insure electrical conductivity.

§236.712 Brake pipe.

A pipe running from the engineman's brake valve through the train, used for the transmission of air under pressure to charge and actuate the automatic brake equipment and charge the reservoirs of the electro-pneumatic brake equipment on each vehicle of the train.

§236.713 Bridge, movable.

That section of a structure bridging a navigable waterway so designed that it may be displaced to permit passage of traffic on the waterway.

§ 236.714 Cab.

The compartment of a locomotive from which the propelling power and power brakes of the train are manually controlled.

§§ 236.715—236.716 [Reserved]

§ 236.717 Characteristics, operating.

The measure of electrical values at which electrical or electronic apparatus operate (e.g., drop-away, pick-up, maximum and minimum current, and working value).

[49 FR 3387, Jan. 26, 1984]

§ 236.718 Chart, dog.

A diagrammatic representation of the mechanical locking of an interlocking machine, used as a working plan in making up, assembling and fitting the locking.

§ 236.719 Circuit, acknowledgment.

A circuit consisting of wire or other conducting material installed between the track rails at each signal in territory where an automatic train stop system or cab signal system of the continuous inductive type with 2-indication cab signals is in service, to enforce acknowledgement by the engineman at each signal displaying an aspect requiring a stop.

§ 236.720 Circuit, common return.

A term applied where one wire is used for the return of more than one electric circuit.

§ 236.721 Circuit, control.

An electrical circuit between a source of electric energy and a device which it operates.

§ 236.722 Circuit, cut-in.

A roadway circuit at the entrance to automatic train stop, train control or cab signal territory by means of which locomotive equipment of the continuous inductive type is actuated so as to be in operative condition.

§ 236.723 Circuit, double wire; line.

An electric circuit not employing a common return wire; a circuit formed by individual wires throughout.

§ 236.724 Circuit, shunt fouling.

The track circuit in the fouling section of a turnout, connected in multiple with the track circuit in the main track.

§ 236.725 Circuit, switch shunting.

A shunting circuit which is closed through contacts of a switch circuit controller.

§ 236.726 Circuit, track.

An electrical circuit of which the rails of the track form a part.

§ 236.727 Circuit, track; coded.

A track circuit in which the energy is varied or interrupted periodically.

§ 236.728 Circuit, trap.

A term applied to a circuit used where it is desirable to provide a track circuit but where it is impracticable to maintain a track circuit.

§ 236.729 Cock, double heading.

A manually operated valve by means of which the control of brake operation is transferred to the leading locomotive.

§ 236.730 Coil, receiver.

Concentric layers of insulated wire wound around the core of a receiver of an automatic train stop, train control or cab signal device on a locomotive.

§ 236.731 Controller, circuit.

A device for opening and closing electric circuits.

§ 236.732 Controller, circuit; switch.

A device for opening and closing electric circuits, operated by a rod connected to a switch, derail or movable-point frog.

§ 236.733 Current, foreign.

A term applied to stray electric currents which may affect a signaling system, but which are not a part of the system.

§ 236.734 Current of traffic.

The movement of trains on a specified track in a designated direction.

§ 236.735 Current, leakage.

A stray electric current of relatively small value which flows through or across the surface of insulation when a voltage is impressed across the insulation.

§ 236.736 Cut-section.

A location other than a signal location where two adjoining track circuits end within a block.

§ 236.737 Cut-section, relayed.

A cut-section where the energy for one track circuit is supplied through front contacts or through front and polar contacts of the track relay for the adjoining track circuit.

§ 236.738 Detector, point.

A circuit controller which is part of the switch operating mechanism and operated by a rod connected to a switch, derail or movable point frog to indicate that the point is within a specified distance of the stock rail.

§ 236.739 Device, acknowledging.

A manually operated electric switch or pneumatic valve by means of which, on a locomotive equipped with an automatic train stop or train control device, an automatic brake application can be forestalled, or by means of which, on a locomotive equipped with an automatic cab signal device, the sounding of the cab indicator can be silenced.

§ 236.740 Device, reset.

A device whereby the brakes may be released after an automatic train control brake application.

§ 236.741 Distance, stopping.

The maximum distance on any portion of any railroad which any train operating on such portion of railroad at its maximum authorized speed, will travel during a full service application of the brakes, between the point where such application is initiated and the point where the train comes to a stop.

§ 236.742 Dog, locking.

A steel block attached to a locking bar or tappet of an interlocking machine, by means of which locking between levers is accomplished.

§ 236.743 Dog, swing.

A locking dog mounted in such a manner that it is free to rotate on a trunnion which is riveted to a locking bar.

CROSS REFERENCE: Element, contact. See receiver, § 236.788.

§ 236.744 Element, roadway.

That portion of the roadway apparatus of automatic train stop, train control, or cab signal system, such as electric circuit, inductor, or trip arm to which the locomotive apparatus of such system is directly responsive.

[49 FR 3387, Jan. 26, 1984]

§ 236.745 Face, locking.

The locking surface of a locking dog, tappet or cross locking of an interlocking machine.

§ 236.746 Feature, restoring.

An arrangement on an electro-pneumatic switch by means of which power is applied to restore the switch movement to full normal or to full reverse position, before the driving bar creeps sufficiently to unlock the switch, with control level in normal or reverse position.

[49 FR 3388, Jan. 26, 1984]

§ 236.747 Forestall.

As applied to an automatic train stop or train control device, to prevent an automatic brake application by operation of an acknowledging device or by manual control of the speed of the train.

§ 236.748 [Reserved]

§ 236.749 Indication.

The information conveyed by the aspect of a signal.

CROSS REFERENCE: Inductor, see § 236.744.

§ 236.750 Interlocking, automatic.

An arrangement of signals, with or without other signal appliances, which functions through the exercise of inherent powers as distinguished from those whose functions are controlled

manually, and which are so interconnected by means of electric circuits that their movements must succeed each other in proper sequence, train movements over all routes being governed by signal indication.

§ 236.751 Interlocking, manual.

An arrangement of signals and signal appliances operated from an interlocking machine and so interconnected by means of mechanical and/or electric locking that their movements must succeed each other in proper sequence, train movements over all routes being governed by signal indication.

§ 236.752 Joint, rail, insulated.

A joint in which electrical insulation is provided between adjoining rails.

§ 236.753 Limits, interlocking.

The tracks between the opposing home signals of an interlocking.

§ 236.754 Line, open wire.

An overhead wire line consisting of single conductors as opposed to multiple-conductor cables.

§ 236.755 Link, rocker.

That portion of an interlocking machine which transmits motion between the latch and the universal link.

§ 236.756 Lock, bolt.

A mechanical lock so arranged that if a switch, derail or movable-point frog is not in the proper position for a train movement, the signal governing that movement cannot display an aspect to proceed; and that will prevent a movement of the switch, derail or movable-point frog unless the signal displays its most restrictive aspect.

§ 236.757 Lock, electric.

A device to prevent or restrict the movement of a lever, a switch or a movable bridge, unless the locking member is withdrawn by an electrical device, such as an electromagnet, solenoid or motor.

§ 236.758 Lock, electric, forced drop.

An electric lock in which the locking member is mechanically forced down to the locked position.

§ 236.759 Lock, facing point.

A mechanical lock for a switch, derail, or movable-point frog, comprising a plunger stand and a plunger which engages a lock rod attached to the switch point to lock the operated unit.

§ 236.760 Locking, approach.

Electric locking effective while a train is approaching, within a specified distance, a signal displaying an aspect to proceed, and which prevents, until after the expiration of a predetermined time interval after such signal has been caused to display its most restrictive aspect, the movement of any interlocked or electrically locked switch, movable-point frog, or derail in the route governed by the signal, and which prevents an aspect to proceed from being displayed for any conflicting route.

§ 236.761 Locking, electric.

The combination of one or more electric locks and controlling circuits by means of which levers of an interlocking machine, or switches or other units operated in connection with signaling and interlocking, are secured against operation under certain conditions.

§ 236.762 Locking, indication.

Electric locking which prevents manipulation of levers that would result in an unsafe condition for a train movement if a signal, switch, or other operative unit fails to make a movement corresponding to that of its controlling lever, or which directly prevents the operation of a signal, switch, or other operative unit, in case another unit which should operate first fails to make the required movement.

§ 236.763 Locking, latch operated.

The mechanical locking of an interlocking machine which is actuated by means of the lever latch.

§ 236.764 Locking, lever operated.

The mechanical locking of an interlocking machine which is actuated by means of the lever.

§ 236.765 Locking, mechanical.

An arrangement of locking bars, dogs, tappets, cross locking and other

apparatus by means of which interlocking is effected between the levers of an interlocking machine and so interconnected that their movements must succeed each other in a predetermined order.

§ 236.766 Locking, movable bridge.

The rail locks, bridge locks, bolt locks, circuit controllers, and electric locks used in providing interlocking protection at a movable bridge.

§ 236.767 Locking, route.

Electric locking, effective when a train passes a signal displaying an aspect for it to proceed, which prevents the movement of any switch, movable-point frog, or derail in advance of the train within the route entered. It may be so arranged that as a train clears a track section of the route, the locking affecting that section is released.

§ 236.768 Locking, time.

A method of locking, either mechanical or electrical, which, after a signal has been caused to display an aspect to proceed, prevents, until after the expiration of a predetermined time interval after such signal has been caused to display its most restrictive aspect, the operation of any interlocked or electrically locked switch, movable-point frog, or derail in the route governed by that signal, and which prevents an aspect to proceed from being displayed for any conflicting route.

§ 236.769 Locking, traffic.

Electric locking which prevents the manipulation of levers or other devices for changing the direction of traffic on a section of track while that section is occupied or while a signal displays an aspect for a movement to proceed into that section.

§ 236.770 Locomotive.

A self-propelled unit of equipment which can be used in train service.

§ 236.771 Machine, control.

An assemblage of manually operated devices for controlling the functions of a traffic control system; it may include a track diagram with indication lights.

§ 236.772 Machine, interlocking.

An assemblage of manually operated levers or other devices for the control of signals, switches or other units.

CROSS REFERENCE: Magnet, track, see § 236.744.

§ 236.773 Movements, conflicting.

Movements over conflicting routes.

§ 236.774 Movement, facing.

The movement of a train over the points of a switch which face in a direction opposite to that in which the train is moving.

§ 236.775 Movement, switch-and-lock.

A device, the complete operation of which performs the three functions of unlocking, operating and locking a switch, movable-point frog or derail.

§ 236.776 Movement, trailing.

The movement of a train over the points of a switch which face in the direction in which the train is moving.

§ 236.777 Operator, control.

An employee assigned to operate the control machine of a traffic control system.

§ 236.778 Piece, driving.

A crank secured to a locking shaft by means of which horizontal movement is imparted to a longitudinal locking bar.

§ 236.779 Plate, top.

A metal plate secured to a locking bracket to prevent the cross locking from being forced out of the bracket.

§ 236.780 Plunger, facing point lock.

That part of a facing point lock which secures the lock rod to the plunger stand when the switch is locked.

§ 236.781 [Reserved]

§ 236.782 Point, controlled.

A location where signals and/or other functions of a traffic control system are controlled from the control machine.

§ 236.783 Point, stop-indication.

As applied to an automatic train stop or train control system without the use of roadway signals, a point where a signal displaying an aspect requiring a stop would be located.

§ 236.784 Position, deenergized.

The position assumed by the moving member of an electromagnetic device when the device is deprived of its operating current.

§ 236.785 Position, false restrictive.

A position of a semaphore arm that is more restrictive than it should be.

§ 236.786 Principle, closed circuit.

The principle of circuit design where a normally energized electric circuit which, on being interrupted or deenergized, will cause the controlled function to assume its most restrictive condition.

§ 236.787 Protection, cross.

An arrangement to prevent the improper operation of a signal, switch, movable-point frog, or derail as the result of a cross in electrical circuits.

CROSS REFERENCE: Ramp, see § 236.744.

§ 236.788 Receiver.

A device on a locomotive, so placed that it is in position to be influenced inductively or actuated by an automatic train stop, train control or cab signal roadway element.

§ 236.789 Relay, timing.

A relay which will not close its front contacts or open its back contacts, or both, until the expiration of a definite time intervals after the relay has been energized.

§ 236.790 Release, time.

A device used to prevent the operation of an operative unit until after the expiration of a predetermined time interval after the device has been actuated.

§ 236.791 Release, value.

The electrical value at which the movable member of an electromagnetic device will move to its deenergized portion.

§ 236.792 Reservoir, equalizing.

An air reservoir connected with and adding volume to the top portion of the equalizing piston chamber of the automatic brake valve, to provide uniform service reductions in brake pipe pressure regardless of the length of the train.

CROSS REFERENCE: Rocker, see § 236.755.

§ 236.793 Rod, lock.

A rod, attached to the front rod or lug of a switch, movable-point frog or derail, through which a locking plunger may extend when the switch points or derail are in the normal or reverse position.

§ 236.794 Rod, up-and-down.

A rod used for connecting the semaphore arm to the operating mechanism of a signal.

§ 236.795 Route.

The course or way which is, or is to be, traveled.

§ 236.796 Routes, conflicting.

Two or more routes, opposing, converging or intersecting, over which movements cannot be made simultaneously without possibility of collision.

§ 236.797 Route, interlocked.

A route within interlocking limits.

§ 236.798 Section, dead.

A section of track, either within a track circuit or between two track circuits, the rails of which are not part of a track circuit.

§ 236.799 Section, fouling.

The section of track between the switch points and the clearance point in a turnout.

§ 236.800 Sheet, locking.

A description in tabular form of the locking operations in an interlocking machine.

§ 236.801 Shoe, latch.

The casting by means of which the latch rod and the latch block are held to a lever of a mechanical interlocking machine.

§ 236.802 Shunt.

A by-path in an electrical circuit.

§ 236.802a Siding.

An auxiliary track for meeting or passing trains.

§ 236.803 Signal, approach.

A roadway signal used to govern the approach to another signal and if operative so controlled that its indication furnishes advance information of the indication of the next signal.

§ 236.804 Signal, block.

A roadway signal operated either automatically or manually at the entrance to a block.

§ 236.805 Signal, cab.

A signal located in engineman's compartment or cab, indicating a condition affecting the movement of a train and used in conjunction with interlocking signals and in conjunction with or in lieu of block signals.

§ 236.806 Signal, home.

A roadway signal at the entrance to a route or block to govern trains in entering and using that route or block.

§ 236.807 Signal, interlocking.

A roadway signal which governs movements into or within interlocking limits.

§ 236.808 Signals, opposing.

Roadway signals which govern movements in opposite directions on the same track.

§ 236.809 Signal, slotted mechanical.

A mechanically operated signal with an electromagnetic device inserted in its operating connection to provide a means of controlling the signal electrically, as well as mechanically.

§ 236.810 Spectacle, semaphore arm.

That part of a semaphore arm which holds the roundels and to which the blade is fastened.

§ 236.811 Speed, medium.

A speed not exceeding 40 miles per hour.

§ 236.812 Speed, restricted.

A speed that will permit stopping within one-half the range of vision, but not exceeding 20 miles per hour.

[49 FR 3388, Jan. 26, 1984]

§ 236.813 Speed, slow.

A speed not exceeding 20 miles per hour.

§ 236.813a State, most restrictive.

The mode of an electric or electronic device that is equivalent to a track relay in its deenergized position.

[49 FR 3388, Jan. 26, 1984]

§ 236.814 Station, control.

The place where the control machine of a traffic control system is located.

§ 236.815 Stop.

As applied to mechanical locking, a device secured to a locking bar to limit its movement.

§ 236.816 Superiority of trains.

The precedence conferred upon one train over other trains by train order or by reason of its class or the direction of its movement.

§ 236.817 Switch, electro-pneumatic.

A switch operated by an electro-pneumatic switch-and-lock movement.

§ 236.818 Switch, facing point.

A switch, the points of which face traffic approaching in the direction for which the track is signaled.

§ 236.819 Switch, hand operated.

A non-interlocked switch which can only be operated manually.

§ 236.820 Switch, interlocked.

A switch within the interlocking limits the control of which is interlocked

with other functions of the interlocking.

§ 236.820a Switch, power-operated.

A switch operated by an electrically, hydraulically, or pneumatically driven switch-and-lock movement.

[49 FR 3388, Jan. 26, 1984]

§ 236.821 Switch, sectionalizing.

A switch for disconnecting a section of a power line from the source of energy.

§ 236.822 Switch, spring.

A switch equipped with a spring device which forces the points to their original position after being trailed through and holds them under spring compression.

§ 236.823 Switch, trailing point.

A switch, the points of which face away from traffic approaching in the direction for which the track is signaled.

§ 236.824 System, automatic block signal.

A block signal system wherein the use of each block is governed by an automatic block signal, cab signal, or both.

§ 236.825 System, automatic train control.

A system so arranged that its operation will automatically result in the following:

(a) A full service application of the brakes which will continue either until the train is brought to a stop, or, under control of the engineman, its speed is reduced to a predetermined rate.

(b) When operating under a speed restriction, an application of the brakes when the speed of the train exceeds the predetermined rate and which will continue until the speed is reduced to that rate.

§ 236.826 System, automatic train stop.

A system so arranged that its operation will automatically result in the application of the brakes until the train has been brought to a stop.

§ 236.827 System, block signal.

A method of governing the movement of trains into or within one or more blocks by block signals or cab signals.

§ 236.828 System, traffic control.

A block signal system under which train movements are authorized by block signals whose indications supersede the superiority of trains for both opposing and following movements on the same track.

§ 236.829 Terminal, initial.

The starting point of a locomotive for a trip.

§ 236.830 Time, acknowledging.

As applied to an intermittent automatic train stop system, a predetermined time within which an automatic brake application may be forestalled by means of the acknowledging device.

§ 236.831 Time, delay.

As applied to an automatic train stop or train control system, the time which elapses after the onboard apparatus detects a more restrictive indication until the brakes start to apply.

[49 FR 3388, Jan. 26, 1984]

§ 236.831a Track, main.

A track, other than auxiliary track, extending through yards and between stations, upon which trains are operated by timetable or train orders, or both, or the use of which is governed by block signals.

§ 236.832 Train.

A locomotive or more than one locomotive coupled, with or without cars.

§ 236.833 Train, opposing.

A train, the movement of which is in a direction opposite to and toward another train on the same track.

§ 236.834 Trip.

A movement of a locomotive over all or any portion of automatic train stop, train control or cab signal territory between the terminals for that locomotive; a movement in one direction.

CROSS REFERENCE: Trip-arm, see § 236.744.

§ 236.835 Trunking.

A casing used to protect electrical conductors.

§ 236.836 Trunnion.

A cylindrical projection supporting a revolving part.

§ 236.837 Valve, electro-pneumatic.

A valve electrically operated which, when operated, will permit or prevent passage of air.

§ 236.838 Wire, shunt.

A wire forming part of a shunt circuit.

APPENDIX A TO PART 236—CIVIL PENALTIES [1]

Section	Violation	Willful violation
Subpart A—Rules and Instructions—All Systems		
General:		
236.0 Applicability, minimum requirements	$2,500	$5,000
236.1 Plans, where kept	1,000	2,000
236.2 Grounds	1,000	2,000
236.3 Locking of signal apparatus housings:		
(a) Power interlocking machine cabinet not secured against unauthorized entry	2,500	5,000
(b) other violations	1,000	2,000
236.4 Interference with normal functioning of device	5,000	7,500
236.5 Design of control circuits on closed circuit principle	1,000	2,000
236.6 Hand-operated switch equipped with switch circuit controller	1,000	2,000
236.7 Circuit controller operated by switch-and-lock movement	1,000	2,000
236.8 Operating characteristics of electro-magnetic, electronic, or electrical apparatus	1,000	2,000
236.9 Selection of circuits through indicating or annunciating instruments	1,000	2,000
236.10 Electric locks, force drop type; where required	1,000	2,000
236.11 Adjustment, repair, or replacement of component	2,500	5,000
236.12 Spring switch signal protection; where required	1,000	2,000
236.13 Spring switch; selection of signal control circuits through circuit controller	1,000	2,000
236.14 Spring switch signal protection; requirements	1,000	2,000
236.15 Timetable instructions	1,000	2,000

APPENDIX A TO PART 236—CIVIL PENALTIES [1]—Continued

Section	Violation	Willful violation
236.16 Electric lock, main track releasing circuit:		
(a) Electric lock releasing circuit on main track extends into fouling circuit where turnout not equipped with derail at clearance point either pipe-connected to switch or independently locked, electrically	2,500	5,000
(b) other violations	1,000	2,000
236.17 Pipe for operating connections, requirements	1,000	2,000
Roadway Signals and Cab Signals—		
236.21 Location of roadway signals	1,000	2,000
236.22 Semaphore signal arm; clearance to other objects	1,000	2,000
236.23 Aspects and indications	1,000	2,000
236.24 Spacing of roadway signals	2,500	5,000
236.26 Buffing device, maintenance	1,000	2,000
Track Circuits—		
236.51 Track circuit requirements:		
(a) Shunt fouling circuit used where permissible speed through turnout greater than 45 m.p.h	2,500	5,000
(b) Track relay not in de-energized position or device that functions as track relay not in its most restrictive state when train, locomotive, or car occupies any part of track circuit, except fouling section of turnout of hand-operated main-track crossover	2,500	5,000
(c) other violations	1,000	2,000
236.52 Relayed cut-section	1,000	2,000
236.53 Track circuit feed at grade crossing	1,000	2,000
236.54 Minimum length of track circuit	1,000	2,000
236.55 Dead section; maximum length	1,000	2,000
236.56 Shunting sensitivity	2,500	5,000
236.57 Shunt and fouling wires:		
(a) Shunt or fouling wires do not consist of at least two discrete conductors	2,500	5,000
(b) other violations	1,000	2,000
236.58 Turnout, fouling section:		
(a) Rail joint in shunt fouling section not bonded	2,500	5,000
(b) other violations	1,000	2,000
236.59 Insulated rail joints	1,000	2,000
236.60 Switch shunting circuit; use restricted	2,500	5,000

APPENDIX A TO PART 236—CIVIL PENALTIES [1]—Continued

Section	Violation	Willful violation
Wires and Cables—		
236.71 Signal wires on pole line and aerial cable	1,000	2,000
236.73 Open-wire transmission line; clearance to other circuits	1,000	2,000
236.74 Protection of insulated wire; splice in underground wire	1,000	2,000
236.76 Tagging of wires and interference of wires or tags with signal apparatus	1,000	2,000
Inspections and Tests; All Systems—		
236.101 Purpose of inspection and tests; removal from service or relay or device failing to meet test requirements	2,500	5,000
236.102 Semaphore or search-light signal mechanism	1,000	2,000
236.103 Switch circuit controller or point detector	1,000	2,000
236.104 Shunt fouling circuit	1,000	2,000
236.105 Electric lock	1,000	2,000
236.106 Relays	1,000	2,000
236.107 Ground tests	1,000	2,000
236.108 Insulation resistance tests, wires in trunking and cables:		
(a) Circuit permitted to function on a conductor having insulation resistance value less than 200,000 ohms	2,500	5,000
(b) other violations	1,000	2,000
236.109 Time releases, timing relays and timing devices	1,000	2,000
236.110 Results of tests	1,000	2,000
Subpart B—Automatic Block Signal Systems		
236.201 Track circuit control of signals	1,000	2,000
236.202 Signal governing movements over hand-operated switch	1,000	2,000
236.203 Hand-operated crossover between main tracks; protection	1,000	2,000
236.204 Track signaled for movements in both directions, requirements	1,000	2,000
236.205 Signal control circuits; requirements	1,000	2,000
236.206 Battery or power supply with respect to relay; location	1,000	2,000

APPENDIX A TO PART 236—CIVIL PENALTIES [1]—Continued

Section	Violation	Willful violation
Subpart C—Interlocking		
236.207 Electric lock on hand-operated switch; control:		
(a) Approach or time locking of electric lock on hand-operated switch can be defeated by unauthorized use of emergency device which is not kept sealed in the non-release position	2,500	5,000
(b) other violations	1,000	2,000
236.301 Where signals shall be provided	1,000	2,000
236.302 Track circuits and route locking	1,000	2,000
236.303 Control circuits for signals, selection through circuit controller operated by switch points or by switch locking mechanism	1,000	2,000
236.304 Mechanical locking or same protection effected by circuits	1,000	2,000
236.305 Approach or time locking	1,000	2,000
236.306 Facing point lock or switch-and-lock movement	1,000	2,000
236.307 Indication locking:		
236.308 Mechanical or electric locking or electric circuits; requisites	1,000	2,000
236.309 Loss of shunt protection; where required:		
(a) Loss of shunt of five seconds or less permits release of route locking of power-operated switch, movable point frog, or derail	2,500	5,000
(b) Other violations	1,000	2,000
236.310 Signal governing approach to home signal	1,000	2,000
236.311 Signal control circuits, selection through track relays or devices functioning as track relays and through signal mechanism contacts and time releases at automatic interlocking	1,000	2,000
236.312 Movable bridge, interlocking of signal appliances with bridge devices:		
(a) Emergency bypass switch or device not locked or sealed	2,500	5,000
(b) other violations	1,000	2,000
236.314 Electric lock for hand-operated switch or derail:		
(a) Approach or time locking of electric lock at hand-operated switch or derail can be defeated by unauthorized use of emergency device which is not kept sealed in non-release position	2,500	5,000
(b) other violations	1,000	2,000

APPENDIX A TO PART 236—CIVIL PENALTIES [1]—Continued

Section	Violation	Willful violation
Rules and Instructions—		
236.326 Mechanical locking removed or disarranged; requirement for permitting train movements through interlocking	1,000	2,000
236.327 Switch, movable-point frog or split-point derail	1,000	2,000
236.328 Plunger of facing-point	1,000	2,000
236.329 Bolt lock	1,000	2,000
236.330 Locking dog of switch and lock movement	1,000	2,000
236.334 Point detector	1,000	2,000
236.335 Dogs, stops and trunnions of mechanical locking	1,000	2,000
236.336 Locking bed	1,000	2,000
236.337 Locking faces of mechanical locking; fit	1,000	2,000
236.338 Mechanical locking required in accordance with locking sheet and dog chart	1,000	2,000
236.339 Mechanical locking; maintenance requirements	1,000	2,000
236.340 Electromechanical interlocking machine; locking between electrical and mechanical levers	1,000	2,000
236.341 Latch shoes, rocker links, and quadrants	1,000	2,000
236.342 Switch circuit controller	1,000	2,000
Inspection and Tests—		
236.376 Mechanical locking	1,000	2,000
236.377 Approach locking	1,000	2,000
236.378 Time locking	1,000	2,000
236.379 Route locking	1,000	2,000
236.380 Indication locking	1,000	2,000
236.381 Traffic locking	1,000	2,000
236.382 Switch obstruction test	1,000	2,000
236.383 Valve locks, valves, and valve magnets	1,000	2,000
236.384 Cross protection		
236.386 Restoring feature on power switches		
236.387 Movable bridge locking	1,000	2,000
Subpart D—Traffic Control Systems Standards		
236.401 Automatic block signal system and interlocking standards applicable to traffic control systems:		
236.402 Signals controlled by track circuits and control operator	1,000	2,000
236.403 Signals at controlled point	1,000	2,000
236.404 Signals at adjacent control points	1,000	2,000
236.405 Track signaled for movements in both directions, change of direction of traffic	1,000	2,000
236.407 Approach or time locking; where required	1,000	2,000
236.408 Route locking	1,000	2,000

APPENDIX A TO PART 236—CIVIL PENALTIES [1]—Continued

Section	Violation	Willful violation
236.410 Locking, hand-operated switch; requirements:		
(a) Hand-operated switch on main track not electrically or mechanically locked in normal position where signal not provided to govern movement to main track, movements made at speeds in excess of 20 m.p.h., and train or engine movements may clear main track	2,500	5,000
(b) Hand-operated switch on signaled siding not electrically or mechanically locked in normal position where signal not provided to govern movements to signaled siding, train movements made at speeds in excess of 30 m.p.h., and train or engine movements may clear signaled siding	2,500	5,000
(c) Approach or time locking of electric lock at hand-operated switch can be defeated by use of emergency release device of electric lock which is not kept sealed in non-release position	2,500	5,000
(d) other violations	1,000	2,000
Rules and Instructions—		
236.426 Interlocking rules and instructions applicable to traffic control systems	1,000	2,000
236.476 Interlocking inspections and tests applicable to traffic control systems	1,000	2,000
Subpart E—Automatic Train Stop, Train Control and Cab Signal Systems Standards		
236.501 Forestalling device and speed control	1,000	2,000
236.502 Automatic brake application, initiation by restrictive block conditions stopping distance in advance	1,000	2,000
236.503 Automatic brake application; initiation when predetermined rate of speed exceeded	1,000	2,000
236.504 Operations interconnected with automatic block-signal system	1,000	2,000
236.505 Proper operative relation between parts along roadway and parts on locomotive	1,000	2,000
236.506 Release of brakes after automatic application	1,000	2,000
236.507 Brake application; full service	1,000	2,000

APPENDIX A TO PART 236—CIVIL PENALTIES [1]—Continued

Section	Violation	Willful violation
236.508 Interference with application of brakes by means of brake valve	1,000	2,000
236.509 Two or more locomotives coupled	1,000	2,000
236.511 Cab signals controlled in accordance with block conditions stopping distance in advance	1,000	2,000
236.512 Cab signal indication when locomotive enters blocks	1,000	2,000
236.513 Audible indicator	1,000	2,000
236.514 Interconnection of cab signal system with roadway signal system	1,000	2,000
236.515 Visibility of cab signals	1,000	2,000
236.516 Power supply	1,000	2,000
Rules and Instructions; Roadway—		
236.526 Roadway element not functioning properly	2,500	5,000
236.527 Roadway element insulation resistance	1,000	2,000
236.528 Restrictive condition resulting from open hand-operated switch; requirement	1,000	2,000
236.529 Roadway element inductor; height and distance from rail	1,000	2,000
236.531 Trip arm; height and distance from rail	1,000	2,000
236.532 Strap iron inductor; use restricted	1,000	2,000
236.534 Rate of pressure reduction; equalizing reservoir or brake pipe	1,000	2,000
236.551 Power supply voltage	1,000	2,000
236.552 Insulation resistance	1,000	2,000
236.553 Seal, where required	2,500	5,000
236.554 Rate of pressure reduction; equalizing reservoir or brake pipe	1,000	2,000
236.555 Repaired or rewound receiver coil	1,000	2,000
236.556 Adjustment of relay	1,000	2,000
236.557 Receiver; location with respect to rail	1,000	2,000
236.560 Contact element, mechanical trip type; location with respect to rail	1,000	2,000
236.562 Minimum rail current required	1,000	2,000
236.563 Delay time	1,000	2,000
236.564 Acknowledging time	1,000	2,000
236.565 Provision made for preventing operation of pneumatic brake-applying apparatus by double-heading clock; requirement	1,000	2,000
236.566 Locomotive of each train operating in train stop, train control or cab signal territory; equipped	5,000	7,500

APPENDIX A TO PART 236—CIVIL PENALTIES [1]—Continued

Section	Violation	Willful violation
236.567 Restrictions imposed when device fails and/or is cut out en route:		
(a) Report not made to designated officer at next available point of communication after automatic train stop, train control, or cab signal device fails and/or is cut en route	5,000	7,500
(b) Train permitted to proceed at speed exceeding 79 m.p.h. where automatic train stop, train control, or cab signal device fails and/or is cut out en route when absolute block established in advance of train on which device is inoperative	5,000	7,500
(c) other violations	1,000	2,000
236.568 Difference between speeds authorized by roadway signal and cab signal; action	1,000	2,000
Inspection and Tests; Roadway—		
236.576 Roadway element	1,000	2,000
236.577 Test, acknowledgement, and cut-in circuits	1,000	2,000
Inspection and Tests; Locomotive—		
236.586 Daily or after trip test	2,500	5,000
236.587 Departure test:		
(a) Test of automatic train stop, train control, or cab signal apparatus on locomotive not made on departure of locomotive from initial terminal if equipment on locomotive not cut out between initial terminal and equipped territory	5,000	7,500
(b) Test of automatic train stop, train control, or cab signal apparatus on locomotive not made immediately on entering equipped territory, if equipment on locomotive cut out between initial terminal and equipped territory	5,000	7,500
(c) Automatic train stop, train control, or cab signal apparatus on locomotive making more than one trip within 24-hour period not given departure test within corresponding 24-hour period	5,000	7,500
(d) other violations	2,500	5,000
236.588 Periodic test	2,500	5,000
236.589 Relays	2,500	5,000

APPENDIX A TO PART 236—CIVIL PENALTIES [1]—Continued

Section	Violation	Willful violation
236.590 Pneumatic apparatus:		
(a) Automatic train stop, train control, or cab signal apparatus not inspected and cleaned at least once every 736 days	2,500	5,000
(b) other violations	1,000	2,000
Subpart F—Dragging Equipment and Slide Detectors and Other Similar Protective Devices; Standards		
236.601 Signals controlled by devices; location	1,000	2,000

[1] A penalty may be assessed against an individual only for a willful violation. The Administrator reserves the right to assess a penalty of up to $20,000 for any violation where circumstances warrant. See 49 CFR part 209, appendix A.

[53 FR 52936, Dec. 29, 1988]

PART 240—QUALIFICATION AND CERTIFICATION OF LOCOMOTIVE ENGINEERS

Subpart A—General

Sec.
240.1 Purpose and scope.
240.3 Applicability.
240.5 Construction.
240.7 Definitions.
240.9 Waivers.
240.11 Consequences for noncompliance.
240.13 Information collection requirements.

Subpart B—Component Elements of the Certification Process

240.101 Certification program required.
240.103 Approval of design of individual railroad programs by FRA.
240.105 Criteria for selection of designated supervisors of locomotive engineers.
240.107 Criteria for designation of classes of service.
240.109 General criteria for eligibility based on prior safety conduct.
240.111 Individual's duty to furnish data on prior safety conduct as motor vehicle operator.
240.113 Individual's duty to furnish data on prior safety conduct as an employee of a different railroad.
240.115 Criteria for consideration of prior safety conduct as a motor vehicle operator.
240.117 Criteria for consideration of operating rules compliance data.
240.119 Criteria for consideration of data on substance abuse disorders and alcohol/drug rules compliance.
240.121 Criteria for vision and hearing acuity data.
240.123 Criteria for initial and continuing education.
240.125 Criteria for testing knowledge.
240.127 Criteria for examining skill performance.
240.129 Criteria for monitoring operational performance of certified engineers.

Subpart C—Implementation of the Certification Process

240.201 Schedule for implementation.
240.203 Determinations required as a prerequisite to certification.
240.205 Procedures for determining eligibility based on prior safety conduct.
240.207 Procedures for making the determination on vision and hearing acuity.
240.209 Procedures for making the determination on knowledge.
240.211 Procedures for making the determination on performance skills.
240.213 Procedures for making the determination on completion of training program.
240.215 Retaining information supporting determinations.
240.217 Time limitations for making determinations.
240.219 Denial of certification.
240.221 Identification of qualified persons.
240.223 Criteria for the certificate.
240.225 Reliance on qualification determinations made by other railroads.
240.227 Reliance on qualification requirements of other countries.
240.229 Requirements for joint operations territory.

Subpart D—Administration of the Certification Programs

240.301 Replacement of certificates.
240.303 Operational monitoring requirements.
240.305 Prohibited conduct.
240.307 Revocation of certification.
240.309 Railroad oversight responsibilities.

Subpart E—Dispute Resolution Procedures

240.401 Review board established.
240.403 Petition requirements.
240.405 Processing qualification review petitions.
240.407 Request for a hearing.
240.409 Hearings.
240.411 Appeals.

APPENDIX A TO PART 240—SCHEDULE OF CIVIL PENALTIES
APPENDIX B TO PART 240—PROCEDURES FOR SUBMISSION AND APPROVAL OF LOCOMOTIVE ENGINEER QUALIFICATION PROGRAMS

APPENDIX C TO PART 240—PROCEDURES FOR OBTAINING AND EVALUATING MOTOR VEHICLE DRIVING RECORD DATA
APPENDIX D TO PART 240—IDENTIFICATION OF STATE AGENCIES THAT PERFORM NATIONAL DRIVER REGISTER CHECKS
APPENDIX E TO PART 240—RECOMMENDED PROCEDURES FOR CONDUCTING SKILL PERFORMANCE TESTS

AUTHORITY: 49 U.S.C. Chs. 201–213; 49 CFR 1.49.

SOURCE: 56 FR 28254, June 19, 1991, unless otherwise noted.

Subpart A—General

§ 240.1 Purpose and scope.

(a) The purpose of this part is to ensure that only qualified persons operate a locomotive or train.

(b) This part prescribes minimum Federal safety requirements for the eligibility, training, testing, certification, and monitoring of all locomotive engineers. This part does not restrict a railroad from implementing additional or more stringent requirements for its locomotive engineers that are not inconsistent with this part.

(c) The qualifications for locomotive engineers prescribed in this part are pertinent to any person who operates a locomotive, unless that person is specifically excluded by a provision of this part, regardless of the fact that a person may have a job classification title other than that of locomotive engineer.

§ 240.3 Applicability.

(a) This part applies to all railroads that operate locomotives on standard gage track that is part of the general railroad system of transportation.

(b) This part does not apply to:

(1) Rapid transit operations in an urban area that are not connected with the general system of transportation; and

(2) A railroad that operates only on track inside an installation which is not part of the general railroad system of transportation.

§ 240.5 Construction.

(a) By issuance of these regulations, FRA intends to preempt any State law, rule, regulation, order, or standard covering the same subject matter in accordance with the provisions of section 205 of the Federal Railroad Safety Act of 1970 (45 U.S.C. 434).

(b) FRA does not intend by issuance of these regulations to preempt any provisions of State criminal law that impose sanctions for reckless conduct that leads to actual loss of life, injury, or damage to property, whether such provisions apply specifically to railroad employees or generally to the public at large.

(c) FRA does not intend, by use of the term *locomotive engineer* in this part, to preempt or otherwise alter the terms, conditions, or interpretation of existing collective bargaining agreements that employ other job classification titles when identifying persons authorized by a railroad to operate a locomotive.

(d) FRA does not intend by issuance of these regulations to preempt or otherwise alter the authority of a railroad to initiate disciplinary sanctions against its employees, including managers and supervisors, in the normal and customary manner, including those contained in its collective bargaining agreements.

(e) Nothing in this part shall be construed to create an eligibility or entitlement to employment in other service for the railroad as a result of denial, suspension, or revocation of certification under this part.

[56 FR 28254, June 19, 1991, as amended at 58 FR 19002, Apr. 9, 1993]

§ 240.7 Definitions.

As used in this part—

Administrator means the Administrator of FRA, the Deputy Administrator of FRA, or the delegate of either.

Alcohol means ethyl alcohol (ethanol) and includes use or possession of any beverage, mixture, or preparation containing ethyl alcohol.

Controlled Substance has the meaning assigned by 21 U.S.C. 802 and includes all substances listed on Schedules I through V as they may be revised from time to time (21 CFR parts 1301–1316).

Current Employee is any employee with at least one year of experience in transportation service on a railroad.

Designated Supervisor of Locomotive Engineers is a person designated as such

by a railroad in accordance with the provisions of §240.105 of this part.

Drug means any substance (other than alcohol) that has known mind or function-altering effects on a human subject, specifically including any psychoactive substance and including, but not limited to, controlled substances.

EAP Counselor means a person qualified by experience, education, or training to counsel people affected by substance abuse problems and to evaluate their progress in recovering from or controlling such problems. An EAP Counselor can be a qualified full-time salaried employee of a railroad, a qualified practitioner who contracts with the railroad on a fee-for-service or other basis, or a qualified physician designated by the railroad to perform functions in connection with alcohol or substance abuse evaluation or counseling. As used in this rule, the EAP Counselor owes a duty to the railroad to make an honest and fully informed evaluation of the condition and progress of an employee.

Filing means that a document to be filed under this part shall be deemed filed only upon receipt by the Docket Clerk.

FRA Representative means the Associate Administrator for Safety, FRA, and the Associate Administrator's delegate, including any safety inspector employed by the Federal Railroad Administration and any qualified state railroad safety inspector acting under part 212 of this chapter.

Instructor Engineer means a person who

(1) Is a qualified locomotive engineer under this part,

(2) Has been selected by the railroad to teach others proper train handling procedures, and

(3) Has demonstrated an adequate knowledge of the subjects under instruction.

Joint Operations means rail operations conducted by more than one railroad on the same track regardless of whether such operations are the result of—

(1) Contractual arrangement between the railroads,

(2) Order of a governmental agency or a court of law, or

(3) Any other legally binding directive.

Knowingly means having actual knowledge of the facts giving rise to the violation or that a reasonable person acting in the circumstances, exercising due care, would have had such knowledge.

Locomotive means a piece of on-track equipment, other than hi-rail or specialized maintenance equipment

(1) With one or more propelling motors designed for moving other equipment;

(2) With one or more propelling motors designed to carry freight or passenger traffic or both; or

(3) Without propelling motors but with one or more control stands.

Locomotive engineer means any person who moves a locomotive or group of locomotives regardless of whether they are coupled to other rolling equipment except:

(1) A person who moves a locomotive or group of locomotives within the confines of a locomotive repair or servicing area as provided for in 49 CFR 218.5(f) and 218.29(a)(1); or

(2) A person who moves a locomotive or group of locomotives for distances of less than 100 feet and this incidental movement of a locomotive or locomotives is for inspection or maintenance purposes.

Main track means a track upon which the operation of trains is governed by one or more of the following methods of operation: timetable; mandatory directive; signal indication; or any form of absolute or manual block system.

Medical examiner means a person licensed as a doctor of medicine or doctor of osteopathy. A medical examiner can be a qualified full-time salaried employee of a railroad, a qualified practitioner who contracts with the railroad on a fee-for-service or other basis, or a qualified practitioner designated by the railroad to perform functions in connection with medical evaluations of employees. As used in this rule, the medical examiner owes a duty to the railroad to make an honest and fully informed evaluation of the condition of an employee.

Newly hired employee is any person who is hired with no prior railroad experience, or one with less than one

year of experience in transportation service on that railroad or another railroad.

Railroad means all forms of non-highway ground transportation that run on rails or electromagnetic guideways, including

(1) Commuter or other short-haul rail passenger service in a metropolitan or suburban area and

(2) High speed ground transportation systems that connect metropolitan areas, without regard to whether they use new technologies not associated with traditional railroads.

Such term does not include rapid transit operations within an urban area that are not connected to the general railroad system of transportation.

Railroad Officer means any supervisory employee of a railroad.

Segment means any portion of a railroad assigned to the supervision of one superintendent or equivalent transportation officer.

Substance abuse disorder refers to a psychological or physical dependence on alcohol or a drug or another identifiable and treatable mental or physical disorder involving the abuse of alcohol or drugs as a primary manifestation. A substance abuse disorder is ''active'' within the meaning of this part if the person (1) is currently using alcohol and other drugs, except under medical supervision consistent with the restrictions described in § 219.103 of this chapter or (2) has failed to successfully complete primary treatment or successfully participate in aftercare as directed by an EAP Counselor.

Type I Simulator means a replica of the control compartment of a locomotive with all associated control equipment that:

(1) Functions in response to a person's manipulation and causes the gauges associated with such controls to appropriately respond to the consequences of that manipulation;

(2) Pictorially, audibly and graphically illustrates the route to be taken;

(3) Graphically, audibly, and physically illustrates the consequences of control manipulations in terms of their effect on train speed, braking capacity, and in-train force levels throughout the train; and

(4) Is computer enhanced so that it can be programmed for specific train consists and the known physical characteristics of the line illustrated.

Type II Simulator means a replica of the control equipment for a locomotive that:

(1) Functions in response to a person's manipulation and causes the gauges associated with such controls to appropriately respond to the consequences of that manipulation;

(2) Pictorially, audibly, and graphically illustrates the route to be taken;

(3) Graphically and audibly illustrates the consequences of control manipulations in terms of their effect on train speed braking capacity, and in-train force levels throughout the train; and

(4) Is computer enhanced so that it can be programmed for specific train consists and the known physical characteristics of the line illustrated.

Type III Simulator means a replica of the control equipment for a locomotive that:

(1) Functions in response to a person's manipulation and causes the gauges associated with such controls to appropriately respond to the consequences of that manipulation;

(2) Graphically illustrates the route to be taken;

(3) Graphically illustrates the consequences of control manipulations in terms of their effect on train speed braking capacity, and in-train force levels throughout the train; and

(4) Is computer enhanced so that it can be programmed for specific train consists and the known physical characteristics of the line illustrated.

[56 FR 28254, June 19, 1991, as amended at 58 FR 19002, Apr. 9, 1993; 60 FR 53136, Oct. 12, 1995]

§ 240.9 Waivers.

(a) Any person may petition the Federal Railroad Administration for a waiver of compliance with any requirement prescribed in this part.

(b) Each petition for a waiver under this section must be filed in the manner and contain the information required by part 211 of this chapter.

(c) If the Administrator finds that a waiver of compliance is in the public interest and is consistent with railroad

safety, he or she may grant the waiver subject to any conditions he or she deems necessary.

§ 240.11 Consequences for noncompliance.

(a) Any person (including a railroad and any manager, supervisor, official, or other employee or agent of a railroad) who violates any requirement of this part or causes the violation of any such requirement is subject to a civil penalty of at least $250, but not more than $10,000 per violation, except that: Penalties may be assessed against individuals only for willful violations, and, where a grossly negligent violation or a pattern of repeated violations has created an imminent hazard of death or injury to persons, or has caused death or injury, a penalty not to exceed $20,000 per violation may be assessed. Each day a violation continues shall constitute a separate offense. Appendix A is a statement of policy that contains a schedule of civil penalty amounts used in connection with this rule.

(b) Any person (including a railroad and any manager, supervisor, official, or other employee or agent of a railroad) who violates any requirement of this part or causes the violation of any such requirement may be subject to disqualification from all safety-sensitive service in accordance with part 209 of this chapter.

(c) Any person (including a railroad and any manager, supervisor, official, or other employee or agent of a railroad) who knowingly and willfully falsifies any record required by this part may be subject to criminal penalties under the provisions of 45 U.S.C. 438.

(d) In addition to the enforcement methods referred to in paragraphs (a), (b), and (c) of this section, FRA may also address violations of this part by use of the emergency order, compliance order, and/or injunctive provisions of the Federal Railroad Safety Act.

§ 240.13 Information collection requirements.

(a) The information collection requirements of this part were reviewed by the Office of Management and Budget pursuant to the Paperwork Reduction Act of 1980 (44 U.S.C. 3501 *et seq.*) and are assigned OMB control number 2130–0533.

(b) The information collection requirements are found in the following sections: §§ 240.101, 240.103, 240.105, 240.107, 240.109, 240.111, 240.113, 240.115, 240.117, 240.119, 240.121, 240.123, 240.125, 240.127, 240.129, 240.201, 240.205, 240.207, 240.209, 240.211, 240.213, 240.215, 240.219, 240.221, 240.223, 240.227, 240.229, 240.301, 240.303, 240.305, 240.307, 240.309, 240.401, 240.403, 240.405, 240.407, 240.411.

[56 FR 28254, June 19, 1991, as amended at 58 FR 19003, Apr. 9, 1993]

Subpart B—Component Elements of the Certification Process

§ 240.101 Certification program required.

(a) After September 17, 1991, each railroad in operation on that date and subject to this part shall have in effect a written program for certifying the qualifications of locomotive engineers.

(b) A railroad commencing operations after September 17, 1991, shall have such a program in effect prior to commencing operations.

(c) After the pertinent date specified in paragraph (e), (f), or (g) of § 240.201, each railroad shall have a certification program approved in accordance with § 240.103 that includes:

(1) A procedure for designating any person it determines to be qualified as a supervisor of locomotive engineers that complies with the criteria established in § 240.105;

(2) A designation of the classes of service that it determines will be used in compliance with the criteria established in § 240.107;

(3) A procedure for evaluating prior safety conduct that complies with the criteria established in § 240.109;

(4) A procedure for evaluating visual and hearing acuity that complies with the criteria established in § 240.121;

(5) A procedure for training that complies with the criteria established in § 240.123;

(6) A procedure for knowledge testing that complies with the criteria established in § 240.125;

(7) A procedure for skill performance testing that complies with the criteria established in § 240.127; and

(8) A procedure for monitoring operational performance that complies with the criteria established in § 240.129.

§ 240.103 Approval of design of individual railroad programs by FRA.

(a) Each railroad shall submit its written program and a description of how its program conforms to the specific requirements of this part in accordance with the procedures contained in appendix B and the following schedule:

(1) A Class I railroad (including National Railroad Passenger Corporation) and a railroad providing commuter service shall submit no later than November 15, 1991;

(2) A Class II railroad shall submit no later than May 1, 1992; and

(3) A Class III railroad (including a switching and terminal railroad or any other railroad not otherwise classified) shall submit no later than November 1, 1992.

(4) A railroad commencing operations after the pertinent date previously specified in this paragraph shall submit its certification program for approval at least 60 days before commencing operations.

(b) That submission shall state the railroad's election either:

(1) To accept responsibility for the training of student engineers and thereby obtain authority for that railroad to initially certify a person as an engineer in an appropriate class of service, or

(2) To recertify only engineers previously certified by other railroads.

A railroad that elects to accept responsibility for the training of student engineers shall state in its submission whether it will conduct the training program or employ a training program conducted by some other entity on its behalf but adopted and ratified by that railroad.

(c) A railroad's program is considered approved and may be implemented thirty days after the required filing date (or the actual filing date) unless the Administrator notifies the railroad in writing that the program does not conform to the criteria set forth in this part.

(1) If the Administrator determines that the program does not conform, the Administrator will inform the railroad of the specific deficiencies.

(2) If the Administrator informs the railroad of deficiencies more than 30 days after the initial filing date, the original program may remain in effect until 30 days after approval of the revised program is received.

(d) A railroad shall resubmit its program within 30 days after the date of such notice of deficiencies. A failure to resubmit the program with the necessary revisions will be considered a failure to implement a program under this part.

(1) The Administrator will inform the railroad in writing whether its revised program conforms with this part.

(2) If the program does not conform, the railroad shall resubmit its program.

(e) A railroad that intends to materially modify its program after receiving initial FRA approval shall submit a description of how it intends to modify the program in conformity with the specific requirements of this part at least 30 days prior to implementing such a change.

(1) A modification is material if it would affect the program's conformance with this part.

(2) The modification submission shall contain a description that conforms with the pertinent portion of the procedures contained in appendix B.

(3) The modification submission will be handled in accordance with the procedures of paragraphs (c) and (d) of this section as though it were a new program.

§ 240.105 Criteria for selection of designated supervisors of locomotive engineers.

(a) Each railroad's program shall include criteria and procedures for implementing this section.

(b) The railroad shall examine any person it is considering for qualification as a supervisor of locomotive engineers to determine that he or she:

(1) Knows and understands the requirements of this part;

(2) Can appropriately test and evaluate the knowledge and skills of locomotive engineers;

(3) Has the necessary supervisory experience to prescribe appropriate remedial action for any noted deficiencies in the training, knowledge or skills of a person seeking to obtain or retain certification; and

(4) Is a certified engineer.

§240.107 Criteria for designation of classes of service.

(a) Each railroad's program shall state which of the three classes of service, provided for in paragraph (b) of this section, that it will cover.

(b) A railroad may issue certificates for any or all of the following classes of service:

(1) Train service engineers,

(2) Locomotive servicing engineers, and

(3) Student engineers.

(c) The following operational constraints apply to each class of service:

(1) Train service engineers may operate locomotives singly or in multiples and may move them with or without cars coupled to them;

(2) Locomotive servicing engineers may operate locomotives singly or in multiples but may not move them with cars coupled to them; and

(3) Student engineers may operate only under direct and immediate supervision of an instructor engineer.

(d) Each railroad is authorized to impose additional conditions or operational restrictions on the service an engineer may perform beyond those identified in this section provided those conditions or restrictions are not inconsistent with this part.

§240.109 General criteria for eligibility based on prior safety conduct.

(a) Each railroad's program shall include criteria and procedures to implement this section.

(b) A railroad shall evaluate the prior safety conduct of any person it is considering for qualification as a locomotive engineer and the program shall require that a person is ineligible if the person has an adverse record of prior safety conduct as provided for in §240.115, §240.117, or §240.119.

(c) The program shall require evaluation of data which reflect the person's prior safety conduct as a railroad employee and the person's prior safety conduct as an operator of a motor vehicle, provided that there is relevant prior conduct. The information to be evaluated shall include:

(1) The relevant data furnished from the evaluating railroad's own records, if the person was previously an employee of that railroad;

(2) The relevant data furnished by any other railroad formerly employing the person; and

(3) The relevant data furnished by any governmental agency with pertinent motor vehicle driving records.

(d) The railroad's process for evaluating information concerning prior safety conduct shall be designed to conform wherever necessary with the procedural requirements of §240.111, §240.113, §240.115, §240.117, §240.119, and §240.217.

(e) When eva1uating a person's motor vehicle driving record or a person's railroad employment record, a railroad shall not consider information concerning motor vehicle driving incidents or prior railroad safety conduct that

(1) Occurred prior to the effective date of this rule; or

(2) Occurred at a time other than that specifically provided for in §240.115, §240.117 or §240.119 of this subpart.

(f) A railroad's program shall provide a candidate for certification or recertification a reasonable opportunity to review and comment in writing on any record which contains information concerning the person's prior safety conduct, including information pertinent to determinations required under §240.119 of this subpart, if the railroad believes the record contains information that could be sufficient to render the person ineligible for certification under this subpart.

(g) The opportunity for comment shall be afforded to the person prior to the railroad's rendering its eligibility decision based on that information. Any responsive comment furnished shall be retained by the railroad in accordance with §240.215 of this part.

(h) The program shall include a method for a person to advise the railroad that he or she has never been a railroad employee or obtained a license to drive a motor vehicle. Nothing in

this section shall be construed as imposing a duty or requirement that a person have prior railroad employment experience or obtain a motor vehicle driver's license in order to become a certified locomotive engineer.

(i) Nothing in this section, § 240.111, or § 240.113 shall be construed to prevent persons subject to this part from entering into an agreement that results in a railroad's obtaining the information needed for compliance with this subpart in a different manner than that prescribed in § 240.111 or § 240.113.

§ 240.111 Individual's duty to furnish data on prior safety conduct as motor vehicle operator.

(a) Except for initial certifications under paragraph (b), (h), or (i) of § 240.201 or for persons covered by § 240.109(h), each person seeking certification or recertification under this part shall, within 180 days preceding the date of the railroad's decision on certification or recertification:

(1) Take the actions required by paragraphs (b) through (h) or paragraph (g) of this section to make information concerning his or her driving record available to the railroad that is considering such certification or recertification; and

(2) Take any additional actions, including providing any necessary consent required by State or Federal law to make information concerning his or her driving record available to that railroad.

(b) Each person seeking certification or recertification under this part shall:

(1) Request, in writing, that the chief of each driver licensing agency identified in paragraph (c) of this section provide a copy of that agency's available information concerning his or her driving record to the railroad that is considering such certification or recertification; and

(2) Request, in accordance with the provisions of paragraph (d) or (e) of this section, that a check of the National Driver Register be performed to identify additional information concerning his or her driving record and that any resulting information be provided to that railroad.

(c) Each person shall request the information required under paragraph (b)(1) of this section from:

(1) The chief of the driver licensing agency which last issued that person a driver's license; and

(2) The chief of the driver licensing agency of any other state or states that issued or reissued him or her a driver's license within the preceding five years.

(d) Each person shall request the information required under paragraph (b)(2) of this section from the Chief, National Driver Register, National Highway Traffic Safety Administration, 400 Seventh Street, SW., Washington, DC 20590 in accordance with the procedures contained in appendix C unless the person's motor vehicle driving license was issued by one of the driver licensing agencies identified in appendix D.

(e) If the person's motor vehicle driving license was issued by one of the driver licensing agencies identified in appendix D, the person shall request the chief of that driver licensing agency to perform a check of the National Driver Register for the possible existence of additional information concerning his or her driving record and to provide the resulting information to the railroad.

(f) If advised by the railroad that a driver licensing agency or the National Highway Traffic Safety Administration has informed the railroad that additional information concerning that person's driving history may exist in the files of a state agency not previously contacted in accordance with this section, such person shall:

(1) Request in writing that the chief of the state agency which compiled the information provide a copy of the available information to the prospective certifying railroad; and

(2) Take any additional action required by State or Federal law to obtain that additional information.

(g) Any person who has never obtained a motor vehicle driving license is not required to comply with the provisions of paragraph (b) of this section but shall notify the railroad of that fact in accordance with procedures of the railroad that comply with § 240.109(d).

(h) The actions required for compliance with paragraph (a) of this section shall be undertaken within the 180 days preceding the date of the railroad's decision concerning certification or recertification.

§240.113 Individual's duty to furnish data on prior safety conduct as an employee of a different railroad.

(a) Except for initial certifications under paragraph (b), (h), or (i) of §240.201 or for persons covered by §240.109(h), each person seeking certification or recertification under this part shall, within 180 days preceding the date of the railroad's decision on certification or recertification:

(1) Take the actions required by paragraph (b) of this section to make information concerning his or her prior railroad service record available to the railroad that is considering such certification or recertification; and

(2) Take any additional actions, including providing any necessary consent required by State or Federal law to make information concerning his or her service record available to that railroad.

(b) Each person seeking certification or recertification under this part shall request, in writing, that the chief operating officer or other appropriate person of the former employing railroad provide a copy of that railroad's available information concerning his or her service record to the railroad that is considering such certification or recertification.

§240.115 Criteria for consideration of prior safety conduct as a motor vehicle operator.

(a) Each railroad's program shall include criteria and procedures for implementing this section.

(b) When evaluating a person's motor vehicle driving record, a railroad shall not consider information concerning motor vehicle driving incidents that occurred more than 36 months before the month in which the railroad is making its certification decision and shall only consider information concerning the following types of motor vehicle incidents:

(1) A conviction for, or completed state action to cancel, revoke, suspend, or deny a motor vehicle drivers license for, operating a motor vehicle while under the influence of or impaired by alcohol or a controlled substance;

(2) A conviction for, or completed state action to cancel, revoke, suspend, or deny a motor vehicle driver's license for, refusal to undergo such testing as is required by State law when a law enforcement official seeks to determine whether a person is operating a vehicle while under the influence of alcohol or a controlled substance.

(c) If such an incident is identified,

(1) The railroad shall provide the data to the railroad's EAP Counselor, together with any information concerning the person's railroad service record, and shall refer the person for evaluation to determine if the person has an active substance abuse disorder;

(2) The person shall cooperate in the evaluation and shall provide any requested records of prior counseling or treatment for review exclusively by the EAP Counselor in the context of such evaluation; and

(3) If the person is evaluated as not currently affected by an active substance abuse disorder, the subject data shall not be considered further with respect to certification. However, the railroad shall, on recommendation of the EAP Counselor, condition certification upon participation in any needed aftercare and/or follow-up testing for alcohol or drugs deemed necessary by the EAP Counselor consistent with the technical standards specified in §240.119(d)(3) of this part.

(4) If the person is evaluated as currently affected by an active substance abuse disorder, the person shall not be currently certified and the provisions of §240.119(b) will apply.

§240.117 Criteria for consideration of operating rules compliance data.

(a) Each railroad's program shall include criteria and procedures for implementing this section.

(b) A person who has demonstrated a failure to comply, as described in paragraph (e) of this section, with railroad rules and practices for the safe operation of trains shall not be currently certified as a locomotive engineer.

(c) A certified engineer who has demonstrated a failure to comply, as described in paragraph (e) of this section, with railroad rules and practices for the safe operation of trains shall have certification revoked.

(d) *Limitations on consideration of prior operating rule compliance data.* Except as provided for in paragraph (i) of this section, in determining whether a person may be or remain certified as a locomotive engineer, a railroad shall consider as operating rule compliance data only conduct described in paragraph (e) of this section that occurred within a period of 60 consecutive months prior to the determination. A review of an existing certification shall be initiated promptly upon the occurrence and documentation of any conduct described in this paragraph.

(e) A railroad shall consider violations of its operating rules and practices that involve:

(1) Failure to control a locomotive or train in accordance with a signal indication that requires a complete stop before passing it;

(2) Failure to adhere to limitations concerning train speed when the speed at which the train was operated exceeds the maximum authorized limit by at least 10 miles per hour or by more than one half of the authorized speed, whichever is less;

(3) Failure to adhere to procedures for the safe use of train or engine brakes when the procedures are required for compliance with the transfer, initial, or intermediate terminal test provisions of 49 CFR part 232 (see 49 CFR 232.12 and 232.13);

(4) Occupying main track without proper authority;

(5) Failure to comply with prohibitions against tampering with locomotive mounted safety devices; and

(6) Incidents of noncompliance with § 219.101 of this chapter; however such incidents shall be considered as a violation only for the purposes of paragraphs (g)(2) and (3) of this section.

(f) If in any single incident the person's conduct contravened more than one operating rule or practice, that event shall be treated as a single violation for the purposes of this section.

(g) A period of ineligibility described in this paragraph shall:

(1) Begin, for a person not currently certified, on the date of the railroad's written determination that the most recent incident has occurred; or

(2) Begin, for a person currently certified, on the date of the railroad's notification to the person that recertification has been denied or certification has been revoked; and

(3) Be determined according to the following standards:

(i) In the case of a single incident involving violation of one or more of the operating rules or practices described paragraphs (e)(1) through (e)(5) of this section, the person shall be ineligible to hold a certificate for a period of one month.

(ii) In the case of two separate incidents involving violations of one or more of the operating rules on practices described in paragraph (e) of this section that occurred within 36 months of each other, the person shall be ineligible to hold a certificate for a period of one year.

(iii) In the case of more than two such violations in any consecutive 60 month interval, the person shall be ineligible to hold a certificate for a period of five years.

(iv) Where, based on the occurrence of violations described in subparagraph (e)(6) of this section, different periods of ineligibility may result under the provisions of this section and § 240.119, the longer period of ineligibility shall control.

(h) *Future eligibility to hold certificate.* Only a person whose certification has been denied or revoked for a period of one year in accordance with the provisions of paragraph (g)(2) of this section for reasons other than noncompliance with § 219.101 of this Chapter shall be eligible for grant or reinstatement of the certificate prior to the expiration of the initial period of ineligibility. Such a person shall not be eligible for grant or reinstatement unless and until—

(1) The person has been evaluated by a designated supervisor of locomotive engineers and determined to have received adequate remedial training;

(2) The person has successfully completed any mandatory program of

training or retraining, if that was determined to be necessary by the railroad prior to return to service; and

(3) At least one half the pertinent period of ineligibility specified in paragraph (g)(2) of this section has elapsed.

(i) In no event shall incidents that meet the criteria of paragraphs (i)(1) through (4) of this section be considered as prior incidents for the purposes of paragraph (g)(3) of this section even though such incidents could have been or were validly determined to be violations at the time they occurred. Incidents that shall not be considered under paragraph (g)(3) of this section are those that:

(1) Occurred prior to (effective date of this amendment);

(2) Involved violations of one or more of the following operating rules or practices:

(i) Failure to control a locomotive or train in accordance with a signal indication;

(ii) Failure to adhere to limitations concerning train speed;

(iii) Failure to adhere to procedures for the safe use of train or engine brakes; or

(iv) Entering track segment without proper authority;

(3) Were or could have been found to be violations under this section as it read prior to May 10, 1993; and

(4) Would not be a violation of paragraph (e) of this section as amended.

[56 FR 28254, June 19, 1991, as amended at 58 FR 19003, Apr. 9, 1993]

§ 240.119 Criteria for consideration of data on substance abuse disorders and alcohol drug rules compliance.

(a) Each railroad's program shall include criteria and procedures for implementing this section.

(b) *Fitness requirement.* (1) A person who has an active substance abuse disorder shall not be currently certified as a locomotive engineer.

(2) Except as provided in paragraph (e) of this section, a certified engineer who is determined to have an active substance abuse disorder shall be suspended from certification. Consistent with other provisions of this part, certification may be reinstated as provided in paragraph (d) of this section.

(3) In the case of a current employee of the railroad evaluated as having an active substance abuse disorder (including a person identified under the procedures of § 240.115), the employee may, if otherwise eligible, voluntarily self-refer for substance abuse counseling or treatment under the policy required by § 219.403 of this chapter; and the railroad shall then treat the substance abuse evaluation as confidential except with respect to current ineligibility for certification.

(c) *Prior alcohol/drug conduct; Federal rule compliance.* (1) In determining whether a person may be or remain certified as a locomotive engineer, a railroad shall consider conduct described in paragraph (c)(2) of this section that occurred within a period of 60 consecutive months prior to the review. A review of certification shall be initiated promptly upon the occurrence and documentation of any incident of conduct described in this paragraph.

(2) A railroad shall consider any violation of § 219.101 or § 219.102 of this chapter and any refusal or failure to provide a breath or body fluid sample for testing under the requirements of part 219 of this chapter when instructed to do so by a railroad representative.

(3) A period of ineligibility described in this paragraph shall:

(i) Begin, for a person not currently certified, on the date of the railroad's written determination that the most recent incident has occurred; or

(ii) Begin, for a person currently certified, on the date of the railroad's notification to the person that recertification has been denied or certification has been revoked; and

(4) The period of ineligibility described in this paragraph shall be determined in accordance with the following standards:

(i) In the case of a single violation of § 219.102 of this chapter, the person shall be ineligible to hold a certificate during evaluation and any required primary treatment as described in paragraph (d) of this section. In the case of two violations of § 219.102, the person shall be ineligible to hold a certificate for a period of two years. In the case of

more than two such violations, the person shall be ineligible to hold a certificate for a period of five years.

(ii) In the case of one violation of § 219.102 of this chapter and one violation of § 219.101 of this chapter, the person shall be ineligible to hold a certificate for a period of three years.

(iii) In the case of one violation of § 219.101 of this chapter, the person shall be ineligible to hold a certificate for a period of 9 months (unless identification of the violation was through a qualifying ''co-worker report'' as described in § 219.405 of this chapter and the engineer waives investigation, in which case the certificate shall be deemed suspended during evaluation and any required primary treatment as described in paragraph (d)). In the case of two or more violations of § 219.101, the person shall be ineligible to hold a certificate for a period of five years.

(iv) In the case of a refusal or failure to provide a breath or body fluid sample for testing under the requirements of part 219 of this chapter when instructed to do so by a railroad representative, the refusal or failure shall be treated for purposes of ineligibility under this paragraph in the same manner as a violation of—

(A) § 219.102, in the case of a refusal or failure to provide a urine specimen for testing; or

(B) § 219.101, in the case of a refusal or failure to provide a breath sample (subpart D), or a blood specimen for mandatory post-accident toxicological testing (subpart C)).

(d) *Future eligibility to hold certificate following alcohol/drug violation.* The following requirements apply to a person who has been denied certification or who has had certification suspended or revoked as a result of conduct described in paragraph (c) of this section:

(1) The person shall not be eligible for grant or reinstatement of the certificate unless and until the person has—

(i) Been evaluated by an EAP Counselor to determine if the person currently has an active substance abuse disorder;

(ii) Successfully completed any program of counseling or treatment determined to be necessary by the EAP Counselor prior to return to service; and

(iii) Presented a urine sample for testing under Subpart H of this part that tested negative for controlled substances assayed and has tested negative for alcohol under paragraph (d)(4) of this section.

(2) An engineer placed in service or returned to service under the above-stated conditions shall continue in any program of counseling or treatment deemed necessary by the EAP Counselor and shall be subject to a reasonable program of follow-up alcohol and drug testing without prior notice for a period of not more than 60 months following return to service. Follow-up tests shall include not fewer than 6 alcohol tests and 6 drug tests during the first 12 months following return to service.

(3) Return-to-service and follow-up drug tests shall be performed consistent with the requirements of subpart H of part 219 of this chapter.

(4) Return-to-service and follow-up alcohol tests shall consist of—

(i) Analysis of a breath specimen for alcohol under safeguards consistent with those specified for reasonable cause breath testing under subpart C of part 219 of this chapter; or

(ii) Analysis of a blood specimen for alcohol in the same manner as prescribed in § 219.303 of this chapter. Alcohol tests shall be conducted while the employee is in duty status. However, this paragraph shall not be construed to require compensation of an employee or applicant for any period devoted exclusively to such tests.

(5) Satisfaction of the more stringent return-to-service requirements of this paragraph shall also be deemed to satisfy the requirements of § 219.104(d) of this chapter.

(6) This paragraph does not create an entitlement to utilize the services of a railroad EAP Counselor, to be afforded leave from employment for counseling or treatment, or to employment as a locomotive engineer. Nor does it restrict any discretion available to the railroad to take disciplinary action based on conduct described herein.

(e) *Confidentiality protected.* Nothing in this part shall affect the responsibility of the railroad under § 219.403 of this

chapter (''Voluntary Referral Policy'') to treat voluntary referrals for substance abuse counseling and treatment as confidential; and the certification status of an engineer who is successfully assisted under the procedures of that section shall not be adversely affected. However, the railroad shall include in its voluntary referral policy required to be issued pursuant to § 219.403 of this chapter a provision that, at least with respect to a certified locomotive engineer or a candidate for certification, the policy of confidentiality is waived (to the extent that the railroad shall receive from the EAP Counselor official notice of the substance abuse disorder and shall suspend or revoke the certification, as appropriate) if the person at any time refuses to cooperate in a recommended course of counseling or treatment.

[56 FR 28254, June 19, 1991, as amended at 60 FR 53136, Oct. 12, 1995]

§ 240.121 Criteria for vision and hearing acuity data.

(a) Each railroad's program shall include criteria and procedures implementing this section.

(b) *Fitness requirement.* A person who does not have visual acuity and hearing acuity that meets or exceeds the levels prescribed in this section shall not, except as permitted by paragraph (e) of this section, currently be certified as a locomotive engineer.

(c) Except as provided in paragraph (e), each person shall have visual acuity that meets or exceeds the following thresholds:

(1) For distant viewing either

(i) Distant visual acuity of at least 20/40 (Snellen) in each eye without corrective lenses or

(ii) Distant visual acuity separately corrected to at least 20/40 (Snellen) with corrective lenses and distant binocular acuity of at least 20/40 (Snellen) in both eyes with or without corrective lenses;

(2) A field of vision of at least 70 degrees in the horizontal meridian in each eye; and

(3) The ability to recognize and distinguish between the colors of signals.

(d) Except as provided in paragraph (e) of this section, each person shall have hearing acuity that meets or exceeds the following thresholds when tested by use of an audiometric device (calibrated to American National Standard Specification for Audiometers, S3.6–1969): the person does not have an average hearing loss in the better ear greater than 40 decibels at 500Hz, 1,000 Hz, and 2,000 Hz with or without use of a hearing aid.

(e) A person not meeting the thresholds in paragraphs (c) and (d) of this section may be subject to further medical evaluation by a railroad's medical examiner to determine that person's ability to safely operate a locomotive. If the medical examiner concludes that, despite not meeting the threshold(s), the person has the ability to safely operate a locomotive, the person may be certified as a locomotive engineer and such certification conditioned on any special restrictions the medical examiner determines in writing to be necessary.

§ 240.123 Criteria for initial and continuing education.

(a) Each railroad's program shall include criteria and procedures for implementing this section.

(b) A railroad shall provide for the continuing education of certified locomotive engineers to ensure that each engineer maintains the necessary knowledge, skill and ability concerning personal safety, operating rules and practices, mechanical condition of equipment, methods of safe train handling (including familiarity with physical characteristics), and relevant Federal safety rules.

(c) A railroad that elects to train a previously untrained person to be a locomotive engineer shall provide initial training which, at a minimum:

(1) Is composed of classroom, skill performance, and familiarization with physical characteristics components;

(2) Includes both knowledge and performance skill testing;

(3) Is conducted under the supervision of a qualified class instructor;

(4) Is subdivided into segments or periods of appropriate duration to effectively cover the following subject matter areas:

(i) Personal safety,

(ii) Railroad operating rules,

(iii) Mechanical condition of equipment,

(iv) Train handling procedures (including use of locomotive and train brake systems),

(v) Familiarization with physical characteristics including train handling, and

(vi) Compliance with Federal regulations;

(5) Is conducted so that the performance skill component shall

(i) Be under the supervision of a qualified instructor engineer located in the same control compartment whenever possible;

(ii) Place the student engineer at the controls of a locomotive for a significant portion of the time; and

(iii) Permit the student to experience whatever variety of types of trains are normally operated by the railroad.

§ 240.125 Criteria for testing knowledge.

(a) Each railroad's program shall include criteria and procedures for implementing this section.

(b) A railroad shall have procedures for testing a person being evaluated for qualification as a locomotive engineer in either train or locomotive service to determine that the person has sufficient knowledge of the railroad's rules and practices for the safe operation of trains.

(c) The testing methods selected by the railroad shall be:

(1) Designed to examine a person's knowledge of the railroad's rules and practices for the safe operation of trains;

(2) Objective in nature;

(3) Administered in written form;

(4) Cover the following subjects:

(i) Personal safety practices;

(ii) Operating practices;

(iii) Equipment inspection practices;

(iv) Train handling practices including familiarity with the physical characteristics of the territory; and

(v) Compliance with Federal safety rules;

(5) Sufficient to accurately measure the person's knowledge of the covered subjects; and

(6) Conducted without open reference books or other materials except to the degree the person is being tested on his or her ability to use such reference books or materials.

(d) The conduct of the test shall be documented in writing and the documentation shall contain sufficient information to identify the relevant facts relied on for evaluation purposes.

§ 240.127 Criteria for examining skill performance.

(a) Each railroad's program shall include criteria and procedures for implementing this section.

(b) A railroad shall have procedures for examining the performance skills of a person being evaluated for qualification as a locomotive engineer in either train or locomotive service to determine whether the person has the skills to safely operate locomotives and/or trains, including the proper application of the railroad's rules and practices for the safe operation of locomotives or trains, in the most demanding class or type of service that the person will be permitted to perform.

(c) The testing procedures selected by the railroad shall be:

(1) Designed to examine a person's skills in safely operating locomotives or trains including the proper application of the railroad's rules and practices for the safe operation of locomotives or trains when performing the most demanding class or type of service that the person will be permitted to perform;

(2) Conducted by a designated supervisor of locomotive engineers;

(3) Cover the following subjects during the test period

(i) Operating practices;

(ii) Equipment inspection practices;

(iii) Train handling practices; and

(iv) Compliance with Federal safety rules;

(4) Be of sufficient length to effectively evaluate the person's ability to operate trains; and

(5) Conducted when the person either

(i) Is at the controls of the type of train normally operated on that railroad or segment of railroad and which this person might be permitted or required by the railroad to operate in the normal course of events after certification or

(ii) Is at the controls of a Type I or Type II simulator programmed to replicate the responsive behavior of the type of train normally operated on that railroad or segment of railroad and which this person might be permitted or required by the railroad to operate in the normal course of events after certification.

(d) The conduct of the test shall be documented in writing by the designated supervisor and the documentation shall contain:

(1) The relevant facts concerning the train being operated;

(2) The constraints applicable to its operation; and

(3) The factors observed and relied on for evaluation purposes by the designated supervisor.

§ 240.129 Criteria for monitoring operational performance of certified engineers.

(a) Each railroad's program shall include criteria and procedures for implementing this section.

(b) A railroad shall have procedures for monitoring the operational performance of those it has determined as qualified as a locomotive engineer in either train or locomotive service.

(c) The procedures shall:

(1) Be designed to determine that the person possesses and routinely employs the skills to safely operate locomotives and/or trains, including the proper application of the railroad's rules and practices for the safe operation of locomotives and trains;

(2) Be designed so that each engineer shall be annually monitored by a designated supervisor of locomotive engineers;

(3) Be designed so that the locomotive engineer is either accompanied by the designated supervisor for a reasonable length of time or has his or her train handling activities electronically recorded by a train operations event recorder;

(d) The procedures may be designed so that the locomotive engineer being monitored either (i) is at the controls of the type of train normally operated on that railroad or segment of railroad and which this person might be permitted or required by the railroad to operate in the normal course of events after certification or (ii) is at the controls of a Type I or Type II simulator programmed to replicate the responsive behavior of the type of train normally operated on that railroad or segment of railroad and which this person might be permitted or required by the railroad to operate in the normal course of events after certification.

(e) The testing and examination procedures selected by the railroad for the conduct of a monitoring program shall be:

(1) Designed so that each locomotive engineer shall be given at least one unannounced test each calendar year.

(2) Designed to test engineer compliance with provisions of the railroad's operating rules that require response to signals that display less than a ''clear'' aspect, if the railroad operates with a signal system that must comply with part 236 of this chapter;

(3) Designed to test engineer compliance with provisions of the railroad's operating rules, timetable or other mandatory directives that require affirmative response by the locomotive engineer to less favorable conditions than that which existed prior to initiation of the test;

(4) Designed to test engineer compliance with provisions of the railroad's operating rules, timetable or other mandatory directives violation of which by engineers were cited by the railroad as the cause of train accidents or train incidents in accident reports filed in compliance with part 225 of this chapter in the preceding calendar year;

(5) Designed so that the administration of these tests is effectively distributed throughout whatever portion of a 24-hour day that the railroad conducts its operations; and

(6) Designed so that individual tests are administered without prior notice to the engineer being tested.

Subpart C—Implementation of the Certification Process

§ 240.201 Schedule for implementation.

(a) After October 30, 1991, each railroad in operation on that date shall designate in writing any person(s) it deems qualified as a designated supervisor of locomotive engineers. Each

person so designated shall have demonstrated to the railroad through training, testing or prior experience that he or she has the knowledge, skills, and ability to be a designated supervisor of locomotive engineers.

(b) No later than November 1, 1991, each railroad shall designate in writing all persons that it will deem to be qualified as certified locomotive engineers for the purpose of initial compliance with paragraph (d) of this section, except as provided for in paragraph (h) of this section.

(1) Each person so designated shall have demonstrated to the railroad through training, testing or prior experience that he or she has the knowledge and skills to be a certified locomotive engineer.

(2) Each railroad shall issue, no later than December 31, 1991, a certificate that complies with § 240.223 to each person that it designates as qualified under the provisions of paragraph (b) of this section.

(c) No railroad shall permit or require a person, designated as qualified for certification under the provisions of paragraph (b) of this section, to perform service as a certified locomotive or train service engineer for more than the 36-month period beginning on the pertinent date for compliance with the mandatory procedures for testing and evaluation set forth in the applicable provisions of paragraph (e), (f) or (g) of this section unless that person has been determined to be qualified in accordance with procedures that comply with subpart C.

(d) After December 31, 1991, no railroad shall permit or require any person to operate a locomotive in any class of locomotive or train service unless that person has been certified as a qualified locomotive engineer and issued a certificate that complies with § 240.223.

(e) After December 31, 1991, no Class I railroad (including the National Railroad Passenger Corporation) or railroad providing commuter service shall designate any person it deems qualified as a designated supervisor of locomotive engineers or initially certify or recertify a person as a locomotive engineer in either locomotive or train service unless that person has been tested, evaluated, and determined to be qualified in accordance with procedures that comply with subpart C.

(f) After May 31, 1992 no Class II railroad shall designate any person it deems qualified as a designated supervisor of locomotive engineers or initially certify or recertify a person as a locomotive engineer in any class of locomotive or train service unless that person has been tested, evaluated and determined to be qualified in accordance with procedures that comply with subpart C.

(g) After November 30, 1992 no Class III railroad (including a switching and terminal or other railroad not otherwise classified) shall designate any person it deems qualified as a designated supervisor of locomotive engineers or initially certify or recertify a person as a locomotive engineer in any class of locomotive or train service unless that person has been tested, evaluated and determined to be qualified in accordance with procedures that comply with subpart C.

(h) A railroad may continue to designate any person it deems qualified as a designated supervisor of locomotive engineers or as a certified engineer, on the basis of paragraph (b) determinations, prior to the pertinent date by which a railroad of its class must comply with the procedures for testing and evaluating persons required under subpart C. Each person designated as a locomotive engineer shall be issued a certificate that complies with § 240.223 prior to being required or permitted to operate a locomotive.

(i) A railroad commencing operations prior to the pertinent date for compliance by a railroad of its class may designate any person it deems qualified as a designated supervisor of locomotive engineers or as a certified locomotive engineer on the basis of paragraph (b) until the pertinent date for compliance with the procedures for testing and evaluating required under subpart C. Each person designated as a locomotive engineer shall be issued a certificate that complies with § 240.223 prior to being required or permitted to operate a locomotive.

§ 240.203 Determinations required as a prerequisite to certification.

(a) Except as provided in paragraph (c), after the pertinent date specified in paragraph (e), (f), or (g) of § 240.201, each railroad, prior to initially certifying or recertifying any person as an engineer for any class of service, shall, in accordance with its FRA-approved program determine in writing that:

(1) The individual meets the eligibility requirements of §§ 240.115, 240.117 and 240.119; and

(2) The individual meets the vision and hearing acuity standards of § 240.121;

(3) The individual has the necessary knowledge, as demonstrated by successfully completing a test that meets the requirements of § 240.125;

(4) The individual has the necessary applied knowledge and operating performance skills, as demonstrated by successfully completing an operational performance test that meets the requirements of § 240.127; and

(5) Where a person has not previously been certified, that the person has completed a training program that meets the requirements of § 240.123.

(b) A railroad may certify a person as a student engineer after determining that the person meets the vision and hearing acuity standards of § 240.121. A railroad may subsequently certify that student engineer as either a locomotive servicing engineer or a train service engineer without further review of his or her acuity status provided it determines that:

(1) The person successfully completed a training program that complies with § 240.123;

(2) The person meets the eligibility requirements of §§ 240.109 and 240.119; and

(3) A period of not more than twenty-four months has elapsed since the student engineer certification was issued.

[56 FR 28254, June 19, 1991, as amended at 60 FR 53136, Oct. 12, 1995]

§ 240.205 Procedures for determining eligibility based on prior safety conduct.

(a) After the pertinent date specified in paragraph (e), (f), or (g) of § 240.201, each railroad, prior to initially certifying or recertifying any person as an engineer for any class of service, shall determine that the person meets the eligibility requirements of § 240.115 involving prior conduct as a motor vehicle operator, § 240.117 involving prior conduct as a railroad worker, and § 240.119 involving substance abuse disorders and alcohol/drug rules compliance.

(b) In order to make the determination required under paragraph (a) of this section, a railroad shall have on file documents pertinent to the determinations referred to in paragraph (a) of this section, including a written document from its EAP Counselor either a document reflecting his or her professional opinion that the person has been evaluated as not currently affected by a substance abuse disorder or that the person has been evaluated as affected by an active substance abuse disorder and is ineligible for certification.

§ 240.207 Procedures for making the determination on vision and hearing acuity.

(a) After the pertinent date specified in paragraph (e), (f), or (g) of § 240.201, each railroad, prior to initially certifying or recertifying any person as an engineer for any class of service, shall determine that the person meets the standards for visual acuity and hearing acuity prescribed in § 240.121.

(b) In order to make the determination required under paragraph (a), a railroad shall have on file either:

(1) A medical examiner's certificate that the individual has been medically examined and meets these acuity standards; or

(2) A written document from its medical examiner documenting his or her professional opinion that the person does not meet one or both acuity standards and stating the basis for his or her determination that

(i) The person can nevertheless be certified under certain conditions or

(ii) The person's acuity is such that he or she cannot safely operate a locomotive even with conditions attached.

(c) Any examination required for compliance with this section shall be performed by or under the supervision of a medical examiner or a licensed physician's assistant such that:

(1) A licensed optometrist or a technician responsible to that person may

perform the portion of the examination that pertains to visual acuity; and

(2) A licensed or certified audiologist or a technician responsible to that person may perform the portion of the examination that pertains to hearing acuity.

(d) If the examination required under this section discloses that the person needs corrective lenses or a hearing aid, or both, either to meet the threshold acuity levels established in § 240.121 or to meet a lower threshold determined by the railroad's medical examiner to be sufficient to safely operate a locomotive or train on that railroad, that fact shall be noted on the certificate issued in accordance with the provisions of this part.

(e) Any person with such a certificate notation shall use the relevant corrective device(s) while operating a locomotive in locomotive or train service unless the railroad's medical examiner subsequently determines in writing that the person can safely operate without using the device.

§ 240.209 Procedures for making the determination on knowledge.

(a) After the pertinent date specified in paragraph (e), (f), or (g) of § 240.201, each railroad, prior to initially certifying or recertifying any person as an engineer for any class of train or locomotive service, shall determine that the person has, in accordance with the requirements of § 240.125 of this part, demonstrated sufficient knowledge of the railroad's rules and practices for the safe operation of trains.

(b) In order to make the determination required by paragraph (a) a railroad shall have written documentation showing that the person either

(i) Exhibited his or her knowledge by achieving a passing grade in testing that complies with this part or

(ii) Did not achieve a passing grade in such testing.

(c) If a person fails to achieve a passing score under the testing procedures required by this part no railroad shall permit or require that person to operate a locomotive as a locomotive or train service engineer prior to that person's achieving a passing score during a reexamination of his or her knowledge.

§ 240.211 Procedures for making the determination on performance skills.

(a) After the pertinent date specified in paragraph (e), (f), or (g) of § 240.201, each railroad, prior to initially certifying or recertifying any person as an engineer for any class of train or locomotive service, shall determine that the person has demonstrated, in accordance with the requirements of § 240.127 of this part, the skills to safely operate locomotives or locomotives and trains, including the proper application of the railroad's rules and practices for the safe operation of locomotives or trains, in the most demanding class or type of service that the person will be permitted to perform.

(b) In order to make this determination, a railroad shall have written documentation showing the person either

(i) Exhibited his or her knowledge by achieving a passing grade in testing that complies with this part or

(ii) Did not achieve a passing grade in such testing.

(c) If a person fails to achieve a passing score under the testing and evaluation procedures required by this part, no railroad shall permit or require that person to operate a locomotive as a locomotive or train service engineer prior to that person's achieving a passing score during a reexamination of his or her performance skills.

(d) No railroad shall permit a designated supervisor of locomotive engineers to test, examine or evaluate his or her own performance skills when complying with this section.

§ 240.213 Procedures for making the determination on completion of training program.

(a) After the pertinent date specified in paragraph (e), (f), or (g) of § 240.201, each railroad, prior to the initial issuance of a certificate to any person as a train or locomotive service engineer, shall determine that the person has, in accordance with the requirements of § 240.123 of this part, the knowledge and skills to safely operate a locomotive or train in the most demanding class or type of service that the person will be permitted to perform.

(b) In making this determination, a railroad shall have written documentation showing that:

(1) The person completed a training program that complies with §240.123 of this part;

(2) The person demonstrated his or her knowledge and skills by achieving a passing grade under the testing and evaluation procedures of that training program; and

(3) The person is familiar with the physical characteristics of the railroad or its pertinent segments.

§240.215 Retaining information supporting determinations.

(a) After the pertinent date in paragraphs (e), (f) or (g) of §240.201, a railroad that issues, denies, or revokes a certificate after making the determinations required under §240.203 shall maintain a record for each certified engineer or applicant for certification that contains the information the railroad relied on in making the determinations.

(b) The information concerning eligibility that the railroad shall retain includes:

(1) Any relevant data from the railroad's records concerning the person's prior safety conduct;

(2) Any relevant data furnished by another railroad;

(3) Any relevant data furnished by a governmental agency concerning the person's motor vehicle driving record; and

(4) Any relevant data furnished by the person seeking certification concerning his or her eligibility.

(c) The information concerning vision and hearing acuity that the railroad shall retain includes:

(1) The relevant test results data concerning acuity; and,

(2) If applicable, the relevant data concerning the professional opinion of the railroad's medical examiner on the adequacy of the person's acuity.

(d) The information concerning demonstrated knowledge that the railroad shall retain includes:

(1) Any relevant data from the railroad's records concerning the person's success or failure of the passage of knowledge test(s); and

(2) A sample copy of the written knowledge test or tests administered.

(e) The information concerning demonstrated performance skills that the railroad shall retain includes:

(1) The relevant data from the railroad's records concerning the person's success or failure on the performance skills test(s) that documents the relevant operating facts on which the evaluation is based including the observations and evaluation of the designated supervisor of locomotive engineers;

(2) If a railroad relies on the use of a locomotive operations simulator to conduct the performance skills testing required under this part, the relevant data from the railroad's records concerning the person's success or failure on the performance skills test(s) that documents the relevant operating facts on which the determination was based including the observations and evaluation of the designated supervisor of locomotive engineers; and;

(3) The relevant data from the railroad's records concerning the person's success or failure on tests the railroad performed to monitor the engineer's operating performance in accordance with §240.129.

(f) If a railroad is relying on successful completion of an approved training program conducted by another entity, the relying railroad shall maintain a record for each certified engineer that contains the relevant data furnished by the training entity concerning the person's demonstration of knowledge and performance skills and relied on by the railroad in making its determinations.

(g) If a railroad is relying on a certification decision initially made by another railroad, the relying railroad shall maintain a record for each certified engineer that contains the relevant data furnished by the other railroad which it relied on in making its determinations.

(h) All records required under this section shall be retained for a period of six years from the date of the certification, recertification, denial or revocation decision and shall be made available to FRA representatives upon request during normal business hours.

(i) It shall be unlawful for any railroad to knowingly or any individual to willfully:

(1) Make, cause to be made, or participate in the making of a false entry on the record(s) required by this section; or

(2) Otherwise falsify such records through material misstatement, omission, or mutilation.

(j) Nothing in this section precludes a railroad from maintaining the information required to be retained under this section in an electronic format provided that:

(1) The railroad adequately limits and controls those who have access to such information;

(2) The railroad employs a system for data storage that permits reasonable access and retrieval of the information in usable format when requested to furnish data by FRA representatives; and

(3) Information retrieved from the system can be easily produced in a printed format which can be readily provided to FRA representatives and authenticated by a designated representative of the railroad as a true and accurate copy of the railroad's records if requested to do so by FRA representatives.

[56 FR 28254, June 19, 1991, as amended at 58 FR 19003, Apr. 9, 1993]

§ 240.217 Time limitations for making determinations.

(a) After the pertinent date in paragraph (e), (f) or (g) of § 240.201, a railroad shall not certify or recertify a person as a qualified locomotive engineer in any class of train or engine service, if the railroad is making:

(1) A determination concerning eligibility and the eligibility data being relied on were furnished more than 180 days before the date of the railroad's certification decision;

(2) A determination concerning visual and hearing acuity and the medical examination being relied on was conducted more than 180 days before the date of the railroad's certification decision;

(3) A determination concerning demonstrated knowledge and the knowledge examination being relied on was conducted more than 360 days before the date of the railroad's certification decision; or

(4) A determination concerning demonstrated performance skills and the performance skill testing being relied on was conducted more than 360 days before the date of the railroad's certification decision;

(b) The time limitations of paragraph (a) of this section do not apply to a railroad that is making a certification decision in reliance on determinations made by another railroad in accordance with paragraph (c)(2) of this section, § 240.227, or § 240.229.

(c) Except as provided in § 240.201 concerning implementation dates for initial certification decisions and paragraph (b) of this section, no railroad shall:

(1) Certify a person as a qualified locomotive engineer for an interval of more than 36 months; or

(2) Rely on a certification issued by another railroad that is more than 12 months old.

(d) Except as provided for in § 240.201 concerning initial implementation of the program, a railroad shall issue each person designated as a certified locomotive engineer a certificate that complies with § 240.223 no later than 30 days from the date of its decision to certify or recertify that person.

[56 FR 28254, June 19, 1991, as amended at 58 FR 19003, Apr. 9, 1993; 60 FR 53137, Oct. 12, 1995]

§ 240.219 Denial of certification.

(a) A railroad shall notify a candidate for certification or recertification of information known to the railroad that forms the basis for denying the person certification and provide the person a reasonable opportunity to explain or rebut that adverse information in writing prior to denying certification.

(b) This section does not require further opportunity to comment if the railroad's denial is based solely on factors addressed by §§ 240.115, 240.117, and 240.119 and the opportunity to comment afforded by those sections has been provided.

(c) If it denies a person certification or recertification, a railroad shall notify the person of the adverse decision and explain, in writing, the basis for its

denial decision. The document explaining the basis for the denial shall be mailed or delivered to the person within 10 days after the railroad's decision and shall give the date of the decision.

§ 240.221 Identification of qualified persons.

(a) After November 1, 1991, a railroad shall maintain a written record identifying each person designated by it as a supervisor of locomotive engineers.

(b) After November 1, 1991, a railroad shall maintain a written record identifying each person designated as a certified locomotive engineer. That listing of certified engineers shall indicate the class of service the railroad determines each person is qualified to perform and date of the railroad's certification decision.

(c) If a railroad is responsible for controlling joint operations territory, the listing shall include person(s) certified in accordance with § 240.229.

(d) The listing required by paragraphs (a), (b), and (c) shall be updated at least annually.

(e) The record required under this section shall be kept at the divisional or regional headquarters of the railroad and shall be available for inspection or copying by FRA during regular business hours.

(f) A railroad may obtain approval from FRA to maintain this record electronically or maintain this record at the railroad's general offices, or both. Requests for such approval shall be filed in writing with the Associate Administrator for Safety and contain sufficient information to explain how FRA will be given access to the data that is fully equivalent to that created by compliance with paragraph (e).

§ 240.223 Criteria for the certificate.

(a) As a minimum, each certificate issued in compliance with this part shall:

(1) Identify the railroad that is issuing it;

(2) Indicate that the railroad, acting in conformity with this part, has determined that the person to whom it is being issued has been determined to be qualified to operate a locomotive;

(3) Identify the person to whom it is being issued (including the person's name, date of birth and employee identification number, and either a physical description or photograph of the person);

(4) Identify any conditions or limitations, including the class of service or conditions to ameliorate vision or hearing acuity deficiencies, that restrict the person's operational authority;

(5) Show the date of its issuance;

(6) Be signed by a supervisor of locomotive engineers or other individual designated in accordance with paragraph (b) of this section;

(7) Show the date of the person's last operational monitoring event as required by § 240.129(c) and § 240.303(b), unless that information is reflected on supplementary documents which the locomotive engineer has in his or her possession when operating a locomotive; and

(8) Be of sufficiently small size to permit being carried in an ordinary pocket wallet.

(b) Each railroad to which this part applies shall designate in writing any person, other than a supervisor of locomotive engineers, that it authorizes to sign the certificates described in this section. The designation can identify such persons by name or job title.

(c) Nothing in paragraph (a) of this section shall prohibit any railroad from including additional information on the certificate or supplementing the certificate through other documents.

(d) It shall be unlawful for any railroad to knowingly or any individual to willfully:

(1) Make, cause to be made, or participate in the making of a false entry on that certificate; or

(2) Otherwise falsify that certificate through material misstatement, omission, or mutilation.

[56 FR 28254, June 19, 1991, as amended at 58 FR 19003, Apr. 9, 1993]

§ 240.225 Reliance on qualification determinations made by other railroads.

After December 31, 1991, any railroad that is considering certification of a person as a qualified engineer may rely on determinations made by another railroad concerning that person's qualifications. A railroad relying on

another's certification shall determine that:

(a) The prior certification is still valid in accordance with the provisions of §§ 240.201, 240.217, and 240.307;

(b) The prior certification was for the same classification of locomotive or train service being issued under this section;

(c) The person has received training on and visually observed the physical characteristics of the new territory in accordance with § 240.123;

(d) The person has demonstrated the necessary knowledge concerning its operating rules in accordance with § 240.125.

(e) The person has demonstrated the necessary performance skills concerning its operating rules in accordance with § 240.127.

§ 240.227 Reliance on qualification requirements of other countries.

(a) A railroad that conducts joint operations with a Canadian railroad may certify, for the purposes of compliance with this part, that a person is qualified to be a locomotive or train service engineer provided it determines that:

(1) The person is employed by the Canadian railroad; and

(2) The person meets or exceeds the qualifications standards issued by Transport Canada for such service.

(b) Any Canadian railroad that is required to comply with this regulation may certify that a person is qualified to be a locomotive or train service engineer provided it determines that:

(1) The person is employed by the Canadian railroad; and

(2) The person meets or exceeds the qualifications standards issued by Transport Canada for such service.

§ 240.229 Requirements for joint operations territory.

(a) Except for minimal joint operations provided for in paragraph (f) of this section, no railroad that is responsible for controlling the conduct of joint operations with another railroad shall permit or require any person to operate a locomotive in any class of train or engine service unless that person has been certified as a qualified locomotive engineer for the purposes of joint operations and issued a certificate that complies with § 240.223.

(b) Each railroad that is responsible for controlling the conduct of joint operations with another railroad shall certify a person as a qualified locomotive engineer for the purposes of joint operations either by making the determinations required under subpart C of this part or by relying on the certification issued by another railroad under this part.

(c) If the controlling railroad relies on the certification issued by another railroad, the controlling railroad shall determine:

(1) That the person has been certified as a qualified engineer under the provisions of this part by the railroad which employs that individual;

(2) That the person certified as a locomotive engineer by the other railroad has demonstrated the necessary knowledge concerning the controlling railroad's operating rules, if the rules are different;

(3) That the person certified as a locomotive engineer by the other railroad has the necessary operating skills concerning the joint operations territory; and

(4) That the person certified as a locomotive engineer by the other railroad has the necessary familiarity with the physical characteristics for the joint operations territory.

(d) A railroad that controls joint operations and certifies locomotive engineers from a different railroad may comply with the requirements of paragraph (a) of this section by noting its supplemental certification decision on the original certificate as provided for in § 240.223(c).

(e) A railroad responsible for controlling the conduct of joint operations with another railroad shall be deemed to be in compliance with paragraph (a) of this section when it provides a qualified person to accompany a locomotive engineer who lacks joint operations certification during that engineer's operations in joint operations territory. As used in this section qualified person means either a designated supervisor of locomotive engineers or a certified train service engineer determined by the controlling railroad to have the necessary knowledge concerning the

controlling railroad's operating rules and to have the necessary operating skills including familiarity with its physical characteristics concerning the joint operations territory.

(f) A railroad that is responsible for controlling the conduct of joint operations with another railroad may permit a certified locomotive engineer to operate a locomotive in any class of train or engine service without determining that the person has been certified as a qualified locomotive engineer for the purposes of joint operations when a minimal joint operation is involved. For the purposes of this section a minimal joint operation exists when a locomotive or train belonging to one railroad is being operated on the same track on which operations are conducted by the railroad controlling operations, under the following conditions:

(1) The maximum authorized speed for operations on the track does not exceed 20 miles per hour;

(2) The track is other than a main track;

(3) Operations are conducted under operating rules that require every locomotive and train to proceed at a speed that permits stopping within one half the range of vision of the locomotive engineer; and

(4) The maximum distance for joint operations on the track does not exceed one mile.

[56 FR 28254, June 19, 1991, as amended at 58 FR 19003, Apr. 9, 1993]

Subpart D—Administration of the Certification Programs

§ 240.301 Replacement of certificates.

A railroad shall have a system for the prompt replacement of lost, stolen or mutilated certificates and that system shall be reasonably accessible to certified locomotive engineers in need of a replacement certificate.

§ 240.303 Operational monitoring requirements.

(a) After December 31, 1991, each railroad to which this part applies shall, prior to FRA approval of its program in accordance with § 240.201, have a program to monitor the conduct of its certified locomotive engineers by performing both operational monitoring observations and by conducting unannounced operating rules compliance tests.

(b) The program shall be conducted so that each locomotive engineer shall be given at least one operational monitoring observation by a qualified supervisor of locomotive engineers in each calendar year.

(c) The program shall be conducted so that each locomotive engineer shall be given at least one unannounced compliance test each calendar year.

(d) The unannounced test program shall:

(1) Test engineer compliance with one or more provisions of the railroad's operating rules that require response to signals that display less than a ''clear'' aspect, if the railroad operates with a signal system that must comply with part 236 of this chapter;

(2) Test engineer compliance with one or more provisions of the railroad's operating rules, timetable or other mandatory directives that require affirmative response by the locomotive engineer to less favorable conditions than that which existed prior to initiation of the test;

(3) Test engineer compliance with provisions of the railroad's operating rules, timetable or other mandatory directives the violations of which by engineers were cited by the railroad as the cause of train accidents or train incidents in accident reports filed in compliance with part 225 of this chapter for the preceding year;

(4) Be conducted that so that the administration of these tests is effectively distributed throughout whatever portion of a 24-hour day that the railroad conducts its operations;

(5) Be conducted so that individual tests are administered without prior notice to the locomotive engineer being tested; and

(6) Be conducted so that the results of the test are recorded on the certificate and entered on the record established under § 240.215 within 30 days of the day the test is administered.

§ 240.305 Prohibited conduct.

After December 31, 1991,

(a) It shall be unlawful to:

(1) Operate a locomotive or train at a speed that exceeds the maximum authorized limit by at least 10 miles per hour or by more than one half of the authorized speed, whichever is less;

(2) Operate a locomotive or train past any signal, without completely stopping the locomotive or train, when that signal requires a complete stop before passing it; or

(3) Fail to comply with any mandatory directive concerning the movement of a locomotive or train by occupying a segment of main track without authority.

(b) Each locomotive engineer who has received a certificate required under this part shall:

(1) Have that certificate in his or her possession while on duty as an engineer; and

(2) Display that certificate upon the receipt of a request to do so from

(i) A representative of the Federal Railroad Administration,

(ii) An officer of the issuing railroad, or

(iii) An officer of another railroad when operating a locomotive or train in joint operations territory.

(c) Any locomotive engineer who is notified or called to operate a locomotive or train and such operation would cause the locomotive engineer to exceed certificate limitations, set forth in accordance with subpart B of this part, shall immediately notify the railroad that he or she is not qualified to perform that anticipated service and it shall be unlawful for the railroad to require such service.

(d) During the duration of any certification interval, a locomotive engineer who has a current certificate from more than one railroad shall immediately notify the other certifying railroad(s) if he or she is denied recertification by a railroad or has his or her certification revoked by a railroad.

(e) Nothing in this section shall be deemed to alter a certified locomotive engineer's duty to comply with other provisions of this chapter concerning railroad safety.

[56 FR 28254, June 19, 1991, as amended at 58 FR 19004, Apr. 9, 1993]

§ 240.307 Revocation of certification.

(a) Except as provided for in § 240.119(e), a railroad that certifies or recertifies a person as a qualified locomotive engineer and, during the period that certification is valid, acquires information which convinces the railroad that the person no longer meets the qualification requirements of this part, shall revoke the person's certificate as a qualified locomotive engineer.

(b) Pending a revocation determination under this section, the railroad shall:

(1) Upon receipt of reliable information indicating the person's lack of qualification under this part, immediately suspend the person's certificate;

(2) Prior to or upon suspending the person, provide notice of the reason for this suspension, the pending revocation, and an opportunity for hearing before a presiding officer other than the charging official;

(3) Convene the hearing within the deadline prescribed by either paragraph (c)(1) of this section or the applicable collective bargaining agreement as permitted under paragraph (d) of this section;

(4) Determine, on the record of the hearing, whether the person no longer meets the qualification requirements of this part stating explicitly the basis for the conclusion reached;

(5) When appropriate, impose the pertinent period of revocation provided for in § 240.117 or § 240.119; and

(6) Retain the record of the hearing for 3 years after the date the decision is rendered.

(c) Except as provided for in paragraphs (d) and (f) of this section, a hearing required by this section shall be conducted in accordance with the following procedures:

(1) The hearing shall be convened within 10 days of the date the certificate is suspended unless the locomotive engineer requests or consents to delay in the start of the hearing.

(2) The hearing shall be conducted by a presiding officer, who can be any qualified person authorized by the railroad other than the charging officer.

(3) The presiding officer will exercise the powers necessary to regulate the conduct of the hearing for the purpose

of achieving a prompt and fair determination of all material issues in controversy.

(4) The presiding officer shall convene and preside over the hearing.

(5) Testimony by witnesses at the hearing shall be recorded verbatim.

(6) All relevant and probative evidence shall be received unless the presiding officer determines the evidence to be unduly repetitive or so extensive and lacking in relevancy that its admission would impair the prompt, orderly, and fair resolution of the proceeding.

(7) The presiding officer may:

(i) Adopt any needed procedures for the submission of evidence in written form;

(ii) Examine witnesses at the hearing;

(iii) Convene, recess, adjourn or otherwise regulate the course of the hearing; and

(iv) Take any other action authorized by or consistent with the provisions of this part and permitted by law that may expedite the hearing or aid in the disposition of the proceeding.

(8) Parties may appear and be heard on their own behalf or through designated representatives. Parties may offer relevant evidence including testimony and may conduct such examination of witnesses as may be required for a full disclosure of the relevant facts.

(9) The record in the proceeding shall be closed at conclusion of the hearing unless the presiding officer allows additional time for the submission of information. In such instances the record shall be left open for such time as the presiding officer grants for that purpose.

(10) At the close of the record, the presiding officer shall prepare a written decision in the proceeding.

(11) The decision shall:

(i) Contain the findings of fact as well as the basis therefor, concerning all material issues of fact presented on the record; and

(ii) Be served on the employee.

(12) The railroad shall have the burden of proving that the locomotive engineer's conduct was not in compliance with the applicable railroad operating rule or practice or part 219 of this chapter.

(d) A hearing required by this section which is conducted in a manner that conforms procedurally to the applicable collective bargaining agreement shall be deemed to satisfy the procedural requirements of this section.

(e) A hearing required under this section may be consolidated with any disciplinary or other hearing arising from the same facts, but in all instances the presiding officer for the hearing shall make separate findings as to the revocation required under this section.

(f) A person may waive the right to the hearing provided under this section. That waiver shall:

(1) Be made in writing;

(2) Reflect the fact that the person has knowledge and understanding of these rights and voluntarily surrenders them; and

(3) Be signed by the person making the waiver.

(g) A railroad that has relied on the certification by another railroad under the provisions of § 240.227 or § 240.229, shall revoke its certification if, during the period that certification is valid, the railroad acquires information which convinces it that another railroad has revoked its certification after determining, in accordance with the provisions of this section, that the person no longer meets the qualification requirements of this part. The requirement to provide a hearing under this section is satisfied when any single railroad holds a hearing and no additional hearing is required prior to a revocation by more than one railroad arising from the same facts.

(h) The period of certificate suspension prior to the commencement of a hearing required under this section shall be credited towards satisfying any applicable revocation period imposed in accordance with the provisions of § 240.117.

[58 FR 19004, Apr. 9, 1993, as amended at 60 FR 53137, Oct. 12, 1995]

§ 240.309 Railroad oversight responsibilities.

(a) No later than March 31 of each year (beginning in calendar year 1993), each Class I railroad (including the National Railroad Passenger Corporation

and a railroad providing commuter service) and Class II railroad shall conduct a formal annual review and analysis concerning the administration of its program for responding to detected instances of poor safety conduct by certified locomotive engineers during the prior calendar year.

(b) Each review and analysis shall involve:

(1) The number and nature of the instances of detected poor safety conduct including the nature of the remedial action taken in response thereto;

(2) The number and nature of FRA reported train accidents attributed to poor safety performance by locomotive engineers;

(3) The number and type of operational monitoring test failures and observations of inadequate skill performance recorded by supervisors of locomotive engineers; and

(4) If it conducts joint operations with another railroad, the number of locomotive engineers employed by such other railroad(s) to which such events were ascribed which the controlling railroad certified for joint operations purposes.

(c) Based on that review and analysis each railroad shall determine what action(s) it will take to improve the safety of train operations to reduce or eliminate future incidents of that nature.

(d) If requested in writing by FRA, the railroad shall provide a report of the findings and conclusions reached during such annual review and analysis effort.

(e) For reporting purposes, the nature of detected poor safety conduct shall be capable of segregation for study and evaluation purposes in the following manner:

(1) Incidents involving noncompliance with part 218;

(2) Incidents involving noncompliance with part 219;

(3) Incidents involving noncompliance with part 232;

(4) Incidents involving noncompliance with the railroad's operating rules involving operation of a locomotive or train to operate at a speed that exceeds the maximum authorized limit;

(5) Incidents involving noncompliance with the railroad's operating rules resulting in operation of a locomotive or train past any signal that requires a complete stop before passing it;

(6) Incidents involving noncompliance with the railroad's operating practices including train handling procedures resulting in improper use of dynamic brakes;

(7) Incidents involving noncompliance with the railroad's operating practices (including train handling procedures) resulting in improper use of automatic brakes;

(8) Incidents involving noncompliance with the railroad's operating practices (including train handling procedures) resulting in improper use of a locomotive's independent brake;

(9) Incidents involving noncompliance with the railroad's operating practices (including train handling procedures) resulting in excessive in-train force levels; and

(10) Incidents involving noncompliance with the railroad's operating practices that require operation of a train at a speed that permits stopping within less than the engineers range of vision.

(e) For reporting purposes each category of detected poor safety conduct identified in paragraph (d) of this section shall be capable of being annotated to reflect the following:

(1) The total number of incidents in that category;

(2) The number of incidents within that total which reflects incidents requiring an FRA accident/incident report; and

(3) The number of incidents within that total which were detected as a result of a scheduled operational monitoring effort.

(f) For reporting purposes each category of detected poor safety conduct identified in paragraph (d) of this section shall be capable of being annotated to reflect the following:

(1) The nature of the remedial action taken and the number of events subdivided so as to reflect which of the following actions was selected:

(i) Imposition of informal discipline;

(ii) Imposition of formal discipline;

(iii) Provision of informal training; or

(iv) Provision of formal training; and

(2) If the nature of the remedial action taken was formal discipline, the number of events further subdivided so as to reflect which of the following punishments was imposed by the hearing officer:

(i) The person was withheld from service;

(ii) The person was dismissed from employment or

(iii) The person was issued demerits. If more than one form of punishment was imposed only that punishment deemed the most severe shall be shown.

(g) For reporting purposes each category of detected poor safety conduct identified in paragraph (d) of this section which resulted in the imposition of formal or informal discipline shall be annotated to reflect the following:

(1) The number of instances in which the railroad's internal appeals process reduced the punishment initially imposed at the conclusion of its hearing; and

(2) The number of instances in which the punishment imposed by the railroad was reduced by any of the following entities: The National Railroad Adjustment Board, a Public Law Board, a Special Board of Adjustment or other body for the resolution of disputes duly constituted under the provisions of the Railway Labor Act.

Subpart E—Dispute Resolution Procedures

§ 240.401 Review board established.

(a) Any person who has been denied certification, denied recertification, or has had his or her certification revoked and believes that a railroad incorrectly determined that he or she failed to meet the qualification requirements of this regulation when making the decision to deny or revoke certification, may petition the Federal Railroad Administrator to review the railroad's decision.

(b) The Federal Railroad Administrator has delegated initial responsibility for adjudicating such disputes to the Locomotive Engineer Review Board.

(c) The Locomotive Engineer Review Board shall be composed of at least three employees of the Federal Railroad Administration selected by the Administrator.

[56 FR 28254, June 19, 1991, as amended at 58 FR 19005, Apr. 9, 1993]

§ 240.403 Petition requirements.

(a) To obtain review of a railroad's decision to deny certification, deny recertification, or revoke certification, a person shall file a petition for review that complies with this section.

(b) Each petition shall:

(1) Be in writing;

(2) Be submitted in triplicate to the Docket Clerk, Federal Railroad Administration, 400 Seventh Street SW., Washington, DC, 20590;

(3) Contain all available information that the person thinks supports the person's belief that the railroad acted improperly, including:

(i) The petitioner's full name;

(ii) The petitioner's current mailing address;

(iii) The petitioner's daytime telephone number;

(iv) The name and address of the railroad; and

(v) The facts that the petitioner believes constitute the improper action by the railroad, specifying the locations, dates, and identities of all persons who were present or involved in the railroad's actions (to the degree known by the petitioner);

(4) Explain the nature of the remedial action sought;

(5) Be supplemented by a copy of all written documents in the petitioner's possession that document that railroad's decision; and

(6) Be filed in a timely manner.

(c) A petition seeking review of a railroad's decision to deny certification or recertification filed with FRA more than 180 days after the date of the railroad's denial decision will be denied as untimely.

(d) A petition seeking review of a railroad's decision to revoke certification in accordance with the procedures required by § 240.307 filed with FRA more than 180 days after the date of the railroad's revocation decision will be denied as untimely.

§ 240.405 Processing qualification review petitions.

(a) Each petition shall be acknowledged in writing by FRA and the acknowledgement shall contain the docket number assigned to the petition.

(b) Upon receipt of the petition, FRA will notify the railroad that it has received the petition and provide the railroad with a copy of the petition.

(c) The railroad will be given a period of not to exceed 30 days to submit to FRA any information that the railroad considers pertinent to the petition.

(d) A railroad that submits such information shall:

(1) Identify the petitioner by name and the docket number of the review proceeding;

(2) Provide a copy of the information being submitted to FRA to the petitioner.

(e) Each petition will then be referred to the Locomotive Engineer Review Board for a decision.

(f) The Board will determine whether the denial or revocation of certification or recertification was improper under this regulation (*i.e.*, based on an incorrect determination that the person failed to meet the qualification requirements of this regulation) and grant or deny the petition accordingly. The Board will not otherwise consider the propriety of a railroad's decision, *i.e.*, it will not consider whether the railroad properly applied its own more stringent requirements.

(g) Notice of that decision will be provided in writing to both the petitioner and the railroad. The decision will include findings of fact on which it is based.

§ 240.407 Request for a hearing.

(a) If adversely affected by the Locomotive Engineer Review Board decision, either the petitioner before the Board or the railroad involved shall have a right to an administrative proceeding as prescribed by § 240.409.

(b) To exercise that right, the adversely affected party shall file with the Docket Clerk a written request within 20 days of service of the Board's decision on that party.

(c) The result of a failure to request a hearing within the period provided in paragraph (b) of this section is that the Locomotive Engineer Review Board's decision will constitute final agency action.

(d) If a party elects to request a hearing, that person shall submit a written request to the Docket Clerk containing the following:

(1) The name, address, and telephone number of the respondent and the requesting party's designated representative, if any;

(2) The specific factual issues, industry rules, regulations, or laws that the requesting party alleges need to be examined in connection with the certification decision in question; and

(3) The signature of the requesting party or the requesting party's representative, if any.

(e) Upon receipt of a hearing request complying with paragraph (d) of this section, FRA shall arrange for the appointment of a presiding officer who shall schedule the hearing for the earliest practicable date.

[60 FR 53137, Oct. 12, 1995]

§ 240.409 Hearings.

(a) An administrative hearing for a locomotive engineer qualification petition shall be conducted by a presiding officer, who can be any person authorized by the Administrator, including an administrative law judge.

(b) The presiding officer may exercise the powers of the Administrator to regulate the conduct of the hearing for the purpose of achieving a prompt and fair determination of all material issues in controversy.

(c) The presiding officer shall convene and preside over the hearing. The hearing shall be a *de novo* hearing to find the relevant facts and determine the correct application of this part to those facts. The presiding officer may determine that there is no genuine issue covering some or all material facts and limit evidentiary proceedings to any issues of material fact as to which there is a genuine dispute.

(d) The presiding officer may authorize discovery of the types and quantities which in the presiding officer's discretion will contribute to a fair hearing without unduly burdening the parties. The presiding officer may impose appropriate non-monetary sanctions, including limitations as to the

presentation of evidence and issues, for any party's willful failure or refusal to comply with approved discovery requests.

(e) Every petition, motion, response, or other authorized or required document shall be signed by the party filing the same, or by a duly authorized officer or representative of record, or by any other person. If signed by such other person, the reason therefor must be stated and the power of attorney or other authority authorizing such other person to subscribe the document must be filed with the document. The signature of the person subscribing any document constitutes a certification that he or she has read the document; that to the best of his or her knowledge, information and belief every statement contained in the document is true and no such statements are misleading; and that it is not interposed for delay or to be vexatious.

(f) After the request for a hearing is filed, all documents filed or served upon one party must be served upon all parties. Each party may designate a person upon whom service is to be made when not specified by law, regulation, or directive of the presiding officer. If a party does not designate a person upon whom service is to be made, then service may be made upon any person having subscribed to a submission of the party being served, unless otherwise specified by law, regulation, or directive of the presiding officer. Proof of service shall accompany all documents when they are tendered for filing.

(g) If any document initiating, filed, or served in, a proceeding is not in substantial compliance with the applicable law, regulation, or directive of the presiding officer, the presiding officer may strike or dismiss all or part of such document, or require its amendment.

(h) Any party to a proceeding may appear and be heard in person or by an authorized representative.

(i) Any person testifying at a hearing or deposition may be accompanied, represented, and advised by an attorney or other representative, and may be examined by that person.

(j) Any party may request to consolidate or separate the hearing of two or more petitions by motion to the presiding officer, when they arise from the same or similar facts or when the matters are for any reason deemed more efficiently heard together.

(k) Except as provided in §240.407(c) of this part and paragraph (u)(4) of this section, whenever a party has the right or is required to take action within a period prescribed by this part, or by law, regulation, or directive of the presiding officer, the presiding officer may extend such period, with or without notice, for good cause, provided another party is not substantially prejudiced by such extension. A request to extend a period which has already expired may be denied as untimely.

(l) An application to the presiding officer for an order or ruling not otherwise specifically provided for in this part shall be by motion. The motion shall be filed with the presiding officer and, if written, served upon all parties. All motions, unless made during the hearing, shall be written. Motions made during hearings may be made orally on the record, except that the presiding officer may direct that any oral motion be reduced to writing. Any motion shall state with particularity the grounds therefor and the relief or order sought, and shall be accompanied by any affidavits or other evidence desired to be relied upon which is not already part of the record. Any matter submitted in response to a written motion must be filed and served within fourteen (14) days of the motion, or within such other period as directed by the presiding officer.

(m) Testimony by witnesses at the hearing shall be given under oath and the hearing shall be recorded verbatim. The presiding officer shall give the parties to the proceeding adequate opportunity during the course of the hearing for the presentation of arguments in support of or in opposition to motions, and objections and exceptions to rulings of the presiding officer. The presiding officer may permit oral argument on any issues for which the presiding officer deems it appropriate and beneficial. Any evidence or argument received or proffered orally shall be transcribed and made a part of the record. Any physical evidence or written argument received or proffered

shall be made a part of the record, except that the presiding officer may authorize the substitution of copies, photographs, or descriptions, when deemed to be appropriate.

(n) The presiding officer shall employ the Federal Rules of Evidence for United States Courts and Magistrates as general guidelines for the introduction of evidence. Notwithstanding paragraph (m) of this section, all relevant and probative evidence shall be received unless the presiding officer determines the evidence to be unduly repetitive or so extensive and lacking in relevancy that its admission would impair the prompt, orderly, and fair resolution of the proceeding.

(o) The presiding officer may:

(1) Administer oaths and affirmations;

(2) Issue subpoenas as provided for in § 209.7 of part 209 in this chapter;

(3) Adopt any needed procedures for the submission of evidence in written form;

(4) Examine witnesses at the hearing;

(5) Convene, recess, adjourn or otherwise regulate the course of the hearing; and

(6) Take any other action authorized by or consistent with the provisions of this part and permitted by law that may expedite the hearing or aid in the disposition of the proceeding.

(p) The petitioner before the Locomotive Engineer Review Board, the railroad involved in taking the certification action, and FRA shall be parties at the hearing. All parties may participate in the hearing and may appear and be heard on their own behalf or through designated representatives. All parties may offer relevant evidence, including testimony, and may conduct such cross-examination of witnesses as may be required to make a record of the relevant facts.

(q) The party requesting the administrative hearing shall be the ''hearing petitioner.'' The hearing petitioner shall have the burden of proving its case by a preponderance of the evidence. Hence, if the hearing petitioner is the railroad involved in taking the certification action, that railroad will have the burden of proving that its decision to deny certification, deny recertification, or revoke certification was correct. Conversely, if the petitioner before the Locomotive Engineer Review Board is the hearing petitioner, that person will have the burden of proving that the railroad's decision to deny certification, deny recertification, or revoke certification was incorrect. Between the petitioner before the Locomotive Engineer Review Board and the railroad involved in taking the certification action, the party who is not the hearing petitioner will be a respondent.

(r) FRA will be a mandatory party to the administrative hearing. At the start of each proceeding, FRA will be a respondent.

(s) The record in the proceeding shall be closed at the conclusion of the evidentiary hearing unless the presiding officer allows additional time for the submission of additional evidence. In such instances the record shall be left open for such time as the presiding officer grants for that purpose.

(t) At the close of the record, the presiding officer shall prepare a written decision in the proceeding.

(u) The decision:

(1) Shall contain the findings of fact and conclusions of law, as well as the basis for each concerning all material issues of fact or law presented on the record;

(2) Shall be served on the hearing petitioner and all other parties to the proceeding;

(3) Shall not become final for 35 days after issuance;

(4) Constitutes final agency action unless an aggrieved party files an appeal within 35 days after issuance; and

(5) Is not precedential.

[60 FR 53137, Oct. 12, 1995]

§ 240.411 Appeals.

(a) Any party aggrieved by the presiding officer's decision may file an appeal. The appeal must be filed within 35 days of issuance of the decision with the Federal Railroad Administrator, 400 Seventh Street SW., Washington, DC 20590. A copy of the appeal shall be served on each party. The appeal shall set forth objections to the presiding officer's decision, supported by reference to applicable laws and regulations and with specific reference to the record. If no appeal is timely filed, the presiding

officer's decision constitutes final agency action.

(b) A party may file a reply to the appeal within 25 days of service of the appeal. The reply shall be supported by reference to applicable laws and regulations and with specific reference to the record, if the party relies on evidence contained in the record.

(c) The Administrator may extend the period for filing an appeal or a response for good cause shown, provided that the written request for extension is served before expiration of the applicable period provided in this section.

(d) The Administrator has sole discretion to permit oral argument on the appeal. On the Administrator's own initiative or written motion by any party, the Administrator may grant the parties an opportunity for oral argument.

(e) The Administrator may affirm, reverse, alter or modify the decision of the presiding officer and the Administrator's decision constitutes final agency action.

[56 FR 28254, June 19, 1991, as amended at 60 FR 53138, Oct. 12, 1995]

APPENDIX A TO PART 240—SCHEDULE OF CIVIL PENALTIES [1]

Section	Violation	Willful violation
Subpart B—Component Elements		
240.101—Program Failures		
(a) Failure to have program	$5,000	$10,000
(b) Program that fails to address a subject	2,500	5,000
240.103—Failure to:		
(a) follow Appendix B	1,000	2,000
(d) to resubmit, when directed by FRA	1,000	2,000
240.105—Failure to have adequate procedure for selection of supervisors	2,500	5,000
240.107—Classes of Service		
(a) Failure to designate classes of service	2,000	4,000
240.109—Limitations on considering prior conduct records		
(a) Failure to have procedure for determining eligibility	2,500	5,000
(e) Considering excluded data	2,000	4,000
(f,g) Failure to provide timely review opportunity	2,000	4,000
240.111—Furnishing Motor Vehicle Records		
(a) Failure to action required to make information available	1,000	2,000
(b) Failure to request		
(1) local record	1,000	2,000
(2) NDR record	1,000	2,000
(f) Failure to request additional record	1,000	2,000
(e) Failure to notify of absence of license	750	1,500
(h) Failure to submit request in timely manner	750	1,500
240.113—Furnishing prior employment information		
(a) Failure to take action required to make information available	1,000	2,000
(b) Failure to request record	1,000	2,000
240.115—Criteria for considering prior motor vehicle conduct		
(b) Considering excluded data	2,000	4,000
(c) Failure to		
(1) consider data	5,000	7,500
(3,4) properly act in response to data	2,500	5,000
240.117—Consideration of operational rules compliance records		
(a) Failure to have program and procedures	5,000	10,000
(b–d) Failure to have adequate program or procedure	2,500	5,000
240.119—Consideration of substance abuse /rules compliance records		
(a) Failure to have program and procedures	5,000	10,000
(b–e) Failure to have adequate program or procedure	2,500	5,000
240.121—Failure to have adequate procedure for determining acuity	2,500	5,000
240.123—Failure to have		
(a) adequate procedures for continuing education	2,500	5,000
(b) adequate procedures for training new engineers	2,500	5,000
240.125—Failure to have		
(a) adequate procedures for testing knowledge	2,500	5,000
(d) adequate procedures for documenting testing	2,500	5,000
240.127—Failure to have		
(a) adequate procedures for evaluatinq skill performance	2,500	5,000
(c) adequate procedures for documentinq skills testing	2,500	5,000
240.129—Failure to have		
(a–b) adequate procedures for monitoring performance	2,500	5,000
Subpart C—Implementation of the Process		
240.201—Schedule for implementation		
(a) Failure to select supervisors by specified date	1,000	2,000

APPENDIX A TO PART 240—SCHEDULE OF CIVIL PENALTIES [1]—Continued

Section	Violation	Willful violation
(b) Failure to identify grandfathered engineers	2,000	4,000
(c) Failure to issue certificate to engineer	1,000	2,000
(d) Allowing uncertified person to operate	5,000	10,000
(e–g) Certifying without complying with subpart C	2,500	5,000
(h–i) Failure to issue certificate to engineer	1,000	2,000
240.203 (a) Designating a person as a supervisor without determining that		
(1) person knows and understands this part	2,500	5,000
(2) person can test and evaluate engineers	5,000	7,500
(3) person has experience to prescribe remedies	2,500	5,000
(b) Certifying a person without determining that		
(1) person meets the eligibility criteria	5,000	7,500
(2) person meets the medical criteria	2,500	5,000
(3) person has demonstrated knowledge	2,500	5,000
(4) person has demonstrated skills	2,500	5,000
(c) Certifying a person without determining that		
(1) person has completed training program	2,500	5,000
(2) person meets the eligibility criteria	2,500	5,000
(3) time has elapsed	2,500	5,000
240.205—Procedures for determining eligibility based on prior safety conduct		
(a) Selecting person lacking eligibility	5,000	7,500
(d) Failure to have basis for taking action	2,500	5,000
240.207—Ineligibility based on medical condition		
(a) Selecting person lacking proper acuity	2,000	4,000
(b) Failure to have basis for finding of proper acuity	1,000	2,000
(c) Acuity examinations performed by unauthorized person	1,000	2,000
(d) Failure to note need for device to achieve acuity	1,000	2,000
(e) Failure to use device needed for proper acuity	1,000	2,000
240.209—Demonstrating knowledge		
(b) Failure to properly determine knowledge	2,500	5,000
(c) Improper test procedure	2,000	4,000
(d) Failure to document test results	1,000	2,000
(e) Allowing person to operate despite test failure	2,500	5,000
240.211—Demonstrating skills		
(b) Failure to properly determine knowledge	2,500	5,000
(c) Improper test procedure	2,000	4,000
(d) Failure to document test results	1,000	2,000
(e) Allowing person to operate despite test failure	2,500	5,000
240.213—Completion of approved training program		
(a) Failure to properly determine	2,500	5,000
(b) Failure to document successful program completion	2,000	4,000
240.215—Supporting information		
(a, f–h) Failure to have a record	1,000	2,000
(b) Failure to have complete record	500	1,000
(i) Falsification of record	(–)	10,000
240.217—Time limits for making determinations		
(a, c) Exceeding time limit	2,000	4,000
240.219—Denial of certification		
(a) Failure to notify or provide opportunity for comment	2,000	4,000
(c) Failure to notify, provide data, or untimely notification	2,000	4,000
240.221—Identification of persons		
(a–c) Failure to have a record	2,000	4,000
(d) Failure to update a record	2,000	4,000
(e–f) Failure to make a record available	1,000	2,000
240.223—Certificate criteria		
(a) Improper certificate	500	1,000
(b) Failure to designate those with signatory authority	500	1,000
(d) Falsification of certificate	(–)	10,000
240.225—Railroad Relying on Determination of Another		
(a) Reliance on expired certification	2,500	5,000
(b) Reliance on wrong class of service	2,500	5,000
(c) Failure to familiarize person with new operational territory	2,000	4,000
(d) Failure to determine knowledge	2,000	4,000
240.227—Railroad Relying on Requirements of a Different Country		
(a) Joint operator reliance		
(1) on person not employed	1,000	2,000
(2) on person who fails to meet Canadian requirements	1,000	2,000
(b) Canadian railroad reliance		
(1) on person not employed	1,000	2,000
(2) on person who fails to meet Canadian requirements	1,000	2,000
240.229—Railroad Controlling Joint Operation Territory		
(a) Allowing uncertified person to operate	2,000	4,000

APPENDIX A TO PART 240—SCHEDULE OF CIVIL PENALTIES [1]—Continued

Section	Violation	Willful violation
(b) Certifying without making determinations or relying on another railroad	2,500	5,000
(c) Certifying without determining		
(1) certification status	2,500	5,000
(2) knowledge	2,500	5,000
(3) skills	2,500	5,000
(4) familiarity with physical characteristics	2,000	4,000
(d) Failure to provide qualified person	2,000	4,000
Subpart D—Program Administration		
240.301—Failure to have system for certificate replacement	2,000	4,000
240.303—Monitoring operations		
(a) Failure to have program	5,000	10,000
(b) Failure to observe each person annually	1,000	2,000
(c) Failure to test each person annually	1,000	2,000
(d) Failure to test properly	1,000	2,000
240.305—Prohibited conduct		
(a) Unlawful		
(1) control of speed	2,500	5,000
(2) passing of stop signal	2,500	5,000
(3) occupancy of main track without authority	2,500	5,000
(b) Failure of engineer to		
(1) carry certificate	1,000	2,000
(2) display certificate when requested	1,000	2,000
(c) Failure of engineer to notify railroad of limitations or railroad requiring engineer to exceed limitations	4,000	8,000
(d) Failure of engineer to notify railroad of denial or revocation	4,000	8,000
240.307—Revocation of certification		
(a) Failure to withdraw person from service	2,500	5,000
(b) Failure to notify, provide hearing opportunity; or untimely procedures	2,000	4,000
240.309—Oversight responsibility report		
(a) Failure to report or to report on time	500	1,000
(b–f) Incomplete or inaccurate report	2,000	4,000

[1] A penalty may be assessed against an individual only for a willful violation. The Administrator reserves the right to assess a penalty of up to $20,000 for any violation where circumstances warrant. See 49 CFR part 209, appendix A.

[56 FR 28254, June 19, 1991, as amended at 60 FR 53138, Oct. 12, 1995]

APPENDIX B TO PART 240—PROCEDURES FOR SUBMISSION AND APPROVAL OF LOCOMOTIVE ENGINEER QUALIFICATION PROGRAMS

This appendix establishes procedures for the submission and approval of a railroad's program concerning the training, testing, and evaluating of persons seeking certification or recertification as a locomotive engineer in accordance with the requirements of this part (see §§240.101, 240.103, 240.105, 240.107, 240.123, 240.125, 240.127 and 240.129). It also contains guidance on how FRA will exercise its review and approval responsibilities.

Submission by a Railroad

As provided for in §240.101, each railroad must have a program for determining the qualifications of each person it permits or requires to operate a locomotive. In designing its program a railroad must take into account the trackage and terrain over which it operates, the system(s) for train control that are employed, the operational design characteristics of the track and equipment being operated including train length, train makeup, and train speeds. Each railroad must submit its individual program to FRA for approval as provided for in §240.103. Each program must be accompanied by a request for approval organized in accordance with this appendix. Requests for approval must contain appropriate references to the relevant portion of the program being discussed. Requests should be submitted in writing on standard sized paper (8-1/2 x 11) and can be in letter or narrative format. The railroad's submission shall be sent to the Associate Administrator for Safety, FRA. The mailing address for FRA is 400 Seventh Street, SW., Washington, DC 20590.

Organization of the Submission

Each request should be organized to present the required information in the following standardized manner. Each section must begin by giving the name, title, telephone number, and mailing address of the person to be contacted concerning the matters addressed by that section. If a person is identified in a prior section, it is sufficient to merely repeat the person's name in a subsequent section.

Section 1 of the Submission: General Information and Elections

The first section of the request must contain the name of the railroad, the person to be contacted concerning the request (including the person's name, title, telephone number, and mailing address) and a statement electing either to accept responsibility for educating previously untrained persons to be qualified locomotive engineers or recertify only engineers previously certified by other railroads (see §240.103(b)).

If a railroad elects not to conduct the training of persons not previously trained to be a locomotive engineer, the railroad is not obligated to submit information on how the previously untrained will be trained. A railroad that makes this election will be limited to recertifying persons initially certified by another railroad. A railroad that initially elects not to accept responsibility for training its own locomotive engineers can rescind its initial election by obtaining FRA approval of a modification of its program (see §240.103(e)).

If a railroad elects to accept responsibility for conducting the education of persons not previously trained to be locomotive engineers, the railroad is obligated to submit information on how such persons will be trained but has no duty to actually conduct such training. A railroad that elects to accept the responsibility for the training of such persons may authorize another railroad or a non-railroad entity to perform the actual training effort. The electing railroad remains responsible for assuring that such other training providers adhere to the training program the railroad submits.

This section must also state which class or classes of service the railroad will employ. (See §240.107).

Section 2 of the Submission: Selection of Supervisors of Locomotive Engineers

The second section of the request must contain information concerning the railroad's procedure for selecting the person or persons it will rely on to evaluate the knowledge, skill, and ability of persons seeking certification or recertification. As provided for in §240.105 each railroad must have a procedure for selecting supervisors of locomotive engineers which assures that persons so designated can appropriately test and evaluate the knowledge, skill, and ability of individuals seeking certification or recertification.

Section 240.105 provides a railroad latitude to select the criteria and evaluation methodology it will rely on to determine which person or persons have the required capacity to perform as a supervisor of locomotive engineers. The railroad must describe in this section how it will use that latitude and evaluate those it designates as supervisors of locomotive engineers so as to comply with the performance standard set forth in §240.105(b). The railroad must identify, in sufficient detail to permit effective review by FRA, the criteria for evaluation it has selected. For example, if a railroad intends to rely on one or more of the following, a minimum level of prior experience as an engineer, successful completion of a course of study, or successful passage of a standardized testing program, the submission must state which criteria it will employ.

Section 3 of the Submission: Training Persons Previously Certified

The third section of the request must contain information concerning the railroad's program for training previously certified locomotive engineers. As provided for in §240.123(b) each railroad must have a program for the ongoing education of its locomotive engineers to assure that they maintain the necessary knowledge concerning personal safety, operating rules and practices, mechanical condition of equipment, methods of safe train handling (including familiarity with physical characteristics), and relevant Federal safety rules.

Section 240.123(b) provides a railroad latitude to select the specific subject matter to be covered, duration of the training, method of presenting the information, and the frequency with which the training will be provided. The railroad must describe in this section how it will use that latitude to assure that its engineers remain knowledgeable concerning the safe discharge of their train operation responsibilities so as to comply with the performance standard set forth in §240.123(b). This section must contain sufficient detail to permit effective evaluation of the railroad's training program in terms of the subject matter covered, the frequency and duration of the training sessions, the training environment employed (for example, and use of classroom, use of computer based training, use of simulators, use of film or slide presentations, use of on-job-training) and which aspects of the program are voluntary or mandatory.

Safe train handling involves both abstract knowledge about the appropriate use of engine controls and the application of that knowledge to trains of differing composition traversing varying terrain. Time and circumstances have the capacity to diminish both abstract knowledge and the proper application of that knowledge to discrete events. Time and circumstances also have the capacity to alter the value of previously obtained knowledge and the application of that knowledge. In formulating how it will use the discretion being afforded, each railroad must design its program to address both loss of retention of knowledge and changed

circumstances, and this section of the submission to FRA must address these matters.

For example, locomotive engineers need to have their fundamental knowledge of train operations refreshed periodically. Each railroad needs to advise FRA how that need is satisfied in terms of the interval between attendance at such training, the nature of the training being provided, and methods for conducting the training. A matter of particular concern to FRA is how each railroad acts to assure that engineers remain knowledgeable about safe train handling procedures if the territory over which a locomotive engineer is authorized to operate is territory from which the engineer has been absent. The railroad must have a plan for the familiarization training that addresses the question of how long a person can be absent before needing more education and, once that threshold is reached, how the person will acquire the needed education. Similarly, the program must address how the railroad responds to changes such as the introduction of new technology, new operating rule books, or significant changes in operations including alteration in the territory engineers are authorized to operate over.

Section 4 of the Submission: Testing and Evaluating Persons Previously Certified

The fourth section of the request must contain information concerning the railroad's program for testing and evaluating previously certified locomotive engineers. As provided for in §240.125 and §240.127, each railroad must have a program for the ongoing testing and evaluating of its locomotive engineers to assure that they have the necessary knowledge and skills concerning personal safety, operating rules and practices, mechanical condition of equipment, methods of safe train handling (including familiarity with physical characteristics), and relevant Federal safety rules. Similarly, each railroad must have a program for ongoing testing and evaluating to assure that its locomotive engineers have the necessary vision and hearing acuity as provided for in §240.121.

Sections 240.125 and 240.127 require that a railroad rely on written procedures for determining that each person can demonstrate his or her knowledge of the railroad's rules and practices and skill at applying those rules and practices for the safe operation of a locomotive or train. Section 240.125 directs that, when seeking a demonstration of the person's knowledge, a railroad must employ a written test that contains objective questions and answers and covers the following subject matters: (i) Personal safety practices; (ii) operating practices; (iii) equipment inspection practices; (iv) train handling practices (including familiarity with the physical characteristics of the territory); and (v) compliance with relevant Federal safety rules. The test must accurately measure the person's knowledge of all of these areas.

Section 240.125 provides a railroad latitude in selecting the design of its own testing policies (including the number of questions each test will contain, how each required subject matter will be covered, weighting (if any) to be given to particular subject matter responses, selection of passing scores, and the manner of presenting the test information). The railroad must describe in this section how it will use that latitude to assure that its engineers will demonstrate their knowledge concerning the safe discharge of their train operation responsibilities so as to comply with the performance standard set forth in §240.125.

Section 240.127 directs that, when seeking a demonstration of the person's skill, a railroad must employ a test and evaluation procedure conducted by a designated supervisor of locomotive engineers that contains an objective evaluation of the person's skills at applying the railroad's rules and practices for the safe operation of trains. The test and evaluation procedure must examine the person's skills in terms of all of the following subject matters: (i) Operating practices; (ii) equipment inspection practices; (iii) train handling practices (including familiarity with the physical characteristics of the territory); and (iv) compliance with relevant Federal safety rules. The test must be sufficient to effectively examine the person's skills while operating a train in the most demanding type of service which the person is likely to encounter in the normal course of events once he or she is deemed qualified.

Section 240.127 provides a railroad latitude in selecting the design of its own testing and evaluation procedures (including the duration of the evaluation process, how each required subject matter will be covered, weighing (if any) to be given to particular subject matter response, selection of passing scores, and the manner of presenting the test information). The section should provide information concerning the procedures which the railroad will follow that achieve the objectives described in FRA's recommended practices (see appendix E) for conducting skill performance testing. The section also gives a railroad the latitude to employ either a Type 1 or a Type 2 simulator (properly programmed) to conduct the test and evaluation procedure. A railroad must describe in this section how it will use that latitude to assure that its engineers will demonstrate their skills concerning the safe discharge of their train operation responsibilities so as to comply with the performance standard set forth in §240.127.

Section 240.121 provides a railroad latitude to rely on the professional medical opinion of the railroad's medical examiner concerning the ability of a person with substandard

acuity to safely operate a locomotive. The railroad must describe in this section how it will assure that its medical examiner has sufficient information concerning the railroad's operations to effectively form appropriate conclusions about the ability of a particular individual to safely operate a train.

Section 5 of the Submission: Training, Testing, and Evaluating Persons Not Previously Certified

Unless a railroad has made an election not to accept responsibility for conducting the initial training of persons to be locomotive engineers, the fifth section of the request must contain information concerning the railroad's program for educating, testing, and evaluating persons not previously trained as locomotive engineers. As provided for in §240.123(c), a railroad that is issuing an initial certification to a person to be a locomotive engineer must have a program for the training, testing, and evaluating of its locomotive engineers to assure that they acquire the necessary knowledge and skills concerning personal safety, operating rules and practices, mechanical condition of equipment, methods of safe train handling (including familiarity with physical characteristics), and relevant Federal safety rules.

Section 240.123 establishes a performance standard and gives a railroad latitude in selecting how it will meet that standard. A railroad must describe in this section how it will use that latitude to assure that its engineers will acquire sufficient knowledge and skill and demonstrate their knowledge and skills concerning the safe discharge of their train operation responsibilities. This section must contain the same level of detail concerning initial training programs as that described for each of the components of the overall program contained in sections 2 through 4 of this appendix. A railroad that plans to accept responsibility for the initial training of locomotive engineers may authorize another railroad or a non-railroad entity to perform the actual training effort. The authorizing railroad may submit a training program developed by that authorized trainer but the authorizing railroad remains responsible for assuring that such other training providers adhere to the training program submitted. Railroads that elect to rely on other entities, to conduct training away from the railroad's own trackage, must indicate how the student will be provided with the required familiarization with the physical characteristics for its trackage.

Section 6 of the Submission: Monitoring Operational Performance by Certified Engineers

The final section of the request must contain information concerning the railroad's program for monitoring the operation of its certified locomotive engineers. As provided for in §240.129, each railroad must have a program for the ongoing monitoring of its locomotive engineers to assure that they operate their locomotives in conformity with the railroad's operating rules and practices including methods of safe train handling and relevant Federal safety rules.

Section 240.129 requires that a railroad annually observe each locomotive engineer demonstrating his or her knowledge of the railroad's rules and practices and skill at applying those rules and practices for the safe operation of a locomotive or train. Section 240.129 directs that the observation be conducted by a designated supervisor of locomotive engineers but provides a railroad latitude in selecting the design of its own observation procedures (including the duration of the observation process, reliance on tapes that record the specifics of train operation, and the specific aspects of the engineer's performance to be covered). The section also gives a railroad the latitude to employ either a Type 1 or a Type 2 simulator (properly programmed) to conduct monitoring observations. A railroad must describe in this section how it will use that latitude to assure that the railroad is monitoring that its engineers demonstrate their skills concerning the safe discharge of their train operation responsibilities. A railroad that intends to employ train operation event recorder tapes to comply with this monitoring requirement shall indicate in this section how it anticipates determining what person was at the controls and what signal indications or other operational constraints, if any, were applicable to the train's movement.

Section 7 of the Submission: Procedures for Routine Administration of the Engineer Certification Program

The final section of the request must contain a summary of how the railroad's program and procedures will implement the various specific aspects of the regulatory provisions that relate to routine administration of its certification program for locomotive engineers. At a minimum this section needs to address the procedural aspects of the rule's provisions identified in the following paragraph.

Section 240.109 provides that each railroad must have procedures for review and comment on adverse prior safety conduct, but allows the railroad to devise its own system within generalized parameters. Sections 240.115, 240.117 and 240.119 require a railroad to have procedures for evaluating data concerning prior safety conduct as a motor vehicle operator and as railroad workers, yet leave selection of many details to the railroad. Sections 240.203, 240.217, and 240.219 place a duty on the railroad to make a series of determinations but allow the railroad to

select what procedures it will employ to assure that all of the necessary determinations have been made in a timely fashion; who will be authorized to conclude that person is or is not qualified; and how it will communicate adverse decisions. Documentation of the factual basis the railroad relied on in making determinations under §§240.205, 240.207, 240.209, 240.211, and 240.213 is required, but these sections permit the railroad to select the procedures it will employ to accomplish compliance with these provisions. Sections 240.225 and 240.227 permit reliance on qualification determinations made by other entities and permit a railroad latitude in selecting the procedures it will employ to assure compliance with these provisions. Similarly, §240.229 permits use of railroad selected procedures to meet the requirements for certification of engineers performing service in joint operations territory. Sections 240.301 and 240.307 allow a railroad a certain degree of discretion in complying with the requirements for replacing lost certificates or the conduct of certification revocation proceedings.

This section of the request should outline in summary fashion the manner in which the railroad will implement its program so as to comply with the specific aspects of each of the rule's provisions described in preceding paragraph.

FRA Review

The submissions made in conformity with this appendix will be deemed approved within 30 days after the required filing date or the actual filing date whichever is later. No formal approval document will be issued by FRA. The brief interval for review reflects FRA's judgment that railroads generally already have existing programs that will meet the requirements of this part. FRA has taken the responsibility for notifying a railroad when it detects problems with the railroad's program. FRA retains the right to disapprove a program that has obtained approval due to the passage of time as provided for in section §240.103.

FRA initially proposed specifying the details for most aspects of the programs being submitted under this appendix. The proposed rule contained a distillation of the essential elements of pre-existing training, testing, evaluating, and monitoring programs that appear to result in railroads having locomotive engineers who operate locomotives and trains safely. The proposal contained very specific details for each aspect of the program that appeared to contribute to that result. Those details included such things as the duration of classes intended to teach operating rules as well as the interval and methodology for acquiring familiarization with physical characteristics of an engineer's operational territory. Railroads commenting on the proposed rule did not question the validity of the FRA's views concerning the essential elements of an effective program but did convince FRA that they should be given more discretion to formulate the design of their individual programs.

Rather than establish rigid requirements for each element of the program as initially proposed, FRA has given railroads discretion to select the design of their individual programs within a specified context for each element. The proposed rule, however, provides a good guide to the considerations that should be addressed in designing a program that will meet the performance standards of this final rule. In reviewing program submissions, FRA will focus on the degree to which a particular program deviates from the norms identified in its proposed rule. To the degree that a particular program submission materially deviates from the norms set out in its proposed rule which was published in the FEDERAL REGISTER on December 11, 1989 (54 FR 50890), FRA's review and approval process will be focused on determining the validity of the reasoning relied on by a railroad for selecting its alternative approach and the degree to which the alternative approach is likely to be effective in producing locomotive engineers who have the knowledge, skill, and ability to safely operate trains.

APPENDIX C TO PART 240—PROCEDURES FOR OBTAINING AND EVALUATING MOTOR VEHICLE DRIVING RECORD DATA

The purpose of this appendix is to outline the procedures available to individuals and railroads for complying with the requirements of section 4(a) of the Railroad Safety Improvement Act of 1988 and §§240.109, 240.111 and 240.205 of this part. Those provisions require that railroads consider the motor vehicle driving record of each person prior to issuing him or her certification or recertification as a qualified locomotive engineer.

To fulfill that obligation, a railroad must review a certification candidate's recent motor vehicle driving record. Generally, that will be a single record on file with the state agency that issued the candidate's current license. However, it can include multiple records if the candidate has been issued a motor vehicle driving license by more than one state agency. In addition, the railroad must determine whether the certification candidate is listed in the National Driver Register and, if so listed, to review the data that caused the candidate to be so listed.

Access to State Motor Vehicle Driving Record Data

The right of railroad workers, their employers, or prospective employers to have access to a state motor vehicle licensing agency's data concerning an individual's driving record is controlled by state law. Although many states have mechanisms through which employers and prospective employers such as railroads can obtain such data, there are some states in which privacy concerns make such access very difficult or impossible. Since individuals generally are entitled to obtain access to driving record data that will be relied on by a state motor vehicle licensing agency when that agency is taking action concerning their driving privileges, FRA places responsibility on individuals, who want to serve as locomotive engineers to request that their current state drivers licensing agency or agencies furnish such data directly to the railroad considering certifying them as a locomotive operator. Depending on the procedures adopted by a particular state agency, this will involve the candidate's either sending the state agency a brief letter requesting such action or executing a state agency form that accomplishes the same effect. It will normally involve payment of a nominal fee established by the state agency for such a records check. In rare instances, when a certification candidate has been issued multiple licenses, it may require more than a single request.

The National Driver Register

In addition to seeking an individual state's data, each engineer candidate is required to request that a search and retrieval be performed of any relevant information concerning his or her driving record contained in the National Driver Register. The National Driver Register (NDR) is a system of information created by Congress in 1960. In essence it is a nationwide repository of information on problem drivers that was created in an effort to protect motorists. It is a voluntary State/Federal cooperative program that assists motor vehicle driver licensing agencies in gaining access to data about actions taken by other state agencies concerning an individual's motor vehicle driving record. The NDR is designed to address the problem that occurs when chronic traffic law violators, after losing their license in one State travel to and receive licenses in another State. Currently the NDR is maintained by the National Highway Traffic Safety Administration (NHTSA) of the Department of Transportation under the provisions of the National Driver Register Act (23 U.S.C. 401 note). Under that statute, state motor vehicle licensing authorities voluntarily notify NHTSA when they take action to deny, suspend, revoke or cancel a person's motor vehicle driver's license and, under the provisions of a 1982 change to the statute, states are also authorized to notify NHTSA concerning convictions for operation of a motor vehicle while under the influence of, or impaired by, alcohol or a controlled substance, and for traffic violations arising in connection with a fatal traffic accident, reckless driving or racing on the highway even if these convictions do not result in an immediate loss of driving privileges.

The information submitted to NHTSA contains, at a minimum, three specific pieces of data: the identification of the state authority providing the information, the name of the person whose license is being affected, and the date of birth of that person. It may be supplemented by data concerning the person's height, weight, color of eyes, and social security account number, if a State collects such data.

Access to NDR Data

Essentially only individuals and state licensing agencies can obtain access to the NDR data. Since railroads have no direct access to the NDR data, FRA requires that individuals seeking certification as a locomotive engineer request that an NDR search be performed and direct that the results be furnished to the railroad. FRA requires that each person request the NDR information directly from NHTSA unless the prospective operator has a motor vehicle driver license issued by a state motor vehicle licensing agency that is ''participating'' under the provisions of the National Driver Register Act of 1982. Participating states can directly access the NDR data on behalf of the prospective engineer. The state agencies that currently are authorized to access NDR data in that manner are identified in appendix D of this regulation.

Requesting NHTSA to Perform the NDR Check

The procedures for requesting NHTSA performance of an NDR check are as follows:

1. Each person shall submit a written request to National Highway Traffic Safety Administration at the following address: Chief, National Driver Register, National Highway Traffic Safety Administration, 400 Seventh Street, SW., Washington, DC 20590.

2. The request must contain:

(a) The full legal name;

(b) Any other names used by the person (*e.g.*, nickname or professional name);

(c) The date of birth;

(d) Sex;

(e) Height;

(f) Weight;

(g) Color of eyes;

(h) Driver's license number (unless that is not available).

3. The request must authorize NHTSA to perform the NDR check and to furnish the results of the search directly to the railroad.

4. The request must identify the railroad to which the results are to be furnished, including the proper name of the railroad, and the proper mailing address of the railroad.

5. The person seeking to become a certified locomotive engineer shall sign the request, and that signature must be notarized.

FRA requires that the request be in writing and contain as much detail as is available to improve the reliability of the data search. Any person may supply additional information to that being mandated by FRA. Furnishing additional information, such as the person's Social Security account number, will help to more positively identify any records that may exist concerning the requester. Although no fee is charged for such NDR checks, a minimal cost may be incurred in having the request notarized. The requirement for notarization is designed to ensure that each person's right to privacy is being respected and that records are only being disclosed to legally authorized parties.

Requesting a State Agency to Perform the NDR Check

As discussed earlier in connection with obtaining data compiled by the state agency itself, a person can either write a letter to that agency asking for the NDR check or can use the agency's forms for making such a request. If a request is made by letter the individual must follow the same procedures required when directly seeking the data from NHTSA. At present there are only a limited number of state licensing agencies that have the capacity to make a direct NDR inquiry of this nature. It is anticipated that the number of states with such capability will increase in the near future; therefore, FRA will continue to update the identification of such states by revising appendix D to this regulation to identify such state agencies. Since it would be more efficient for a prospective locomotive engineer to make a single request for both aspects of the information required under this rule, FRA anticipates that state agency inquiry will eventually become the predominant method for making these NDR checks. Requests to state agencies may involve payment of a nominal fee established by the state agency for such a records check.

State agencies normally will respond in approximately 30 days or less and advise whether there is or is not a listing for a person with that name and date of birth. If there is a potential match and the inquiry state was not responsible for causing that entry, the agency normally will indicate in writing the existence of a probable match and will identify the state licensing agency that suspended, revoked or canceled the relevant license or convicted the person of one of the violations referenced earlier in this appendix.

Actions When a Probable NDR Match Occurs

The response provided after performance of an NDR check is limited to either a notification that no potential record match was identified or a notification that a potential record match was identified. If the latter event occurs, the notification will include the identification of the state motor vehicle licensing authority which possesses the relevant record. If the NDR check results indicate a potential match and that the state with the relevant data is the same state which furnished detailed data (because it had issued the person a driving license), no further action is required to obtain additional data. If the NDR check results indicate a potential match and the state with the relevant data is different from the state which furnished detailed data, it then is necessary to contact the individual state motor vehicle licensing authority that furnished the NDR information to obtain the relevant record. FRA places responsibility on the railroad to notify the engineer candidate and on the candidate to contact the state with the relevant information. FRA requires the certification candidate to write to the state licensing agency and request that the agency inform the railroad concerning the person's driving record. If required by the state agency, the person may have to pay a nominal fee for providing such data and may have to furnish written evidence that the prospective operator consents to the release of the data to the railroad. FRA does not require that a railroad or a certification candidate go beyond these efforts to obtain the information in the control of such a state agency, and a railroad may act upon the pending certification without the data if an individual state aqency fails or refuses to supply the records.

If the non-issuing state licensing agency does provide the railroad with the available records, the railroad must verify that the record pertains to the person being considered for certification. It is necessary to perform this verification because in some instances only limited identification information is furnished for use in the NDR and this might result in data about a different person being supplied to the railroad. Among the available means for verifying that the additional state record pertains to the certification candidate are physical description, photographs and handwriting comparisons.

Once the railroad has obtained the motor vehicle driving record which, depending on the circumstance, may consist of more than two documents, the railroad must afford the prospective engineer an opportunity to review that record and respond in writing to its contents in accordance with the provisions of §240.219. The review opportunity must occur before the railroad evaluates

that record. The railroad's required evaluation and subsequent decision making must be done in compliance with the provisions of this part.

APPENDIX D TO PART 240—IDENTIFICATION OF STATE AGENCIES THAT PERFORM NATIONAL DRIVER REGISTER CHECKS

Under the provisions of §240.111 of this part, each person seeking certification or recertification as a locomotive operator must request that a check of the National Driver Register (NDR) be conducted and that the resulting information be furnished to his or her employer or prospective employer. Under the provisions of paragraphs (d) and (e) of §240.111, each person seeking certification or recertification as a locomotive engineer must request that National Highway Traffic Safety Administration conduct the NDR check, unless he or she was issued a motor vehicle driver license by one of the state agencies identified in this appendix. If the certification candidate received a license from one of the designated state agencies, he or she must request the state agency to perform the NDR check. The state motor vehicle licensing agencies listed in this appendix participate in a program that authorizes these state agencies, in accordance with the National Driver Register Act of 1982, to obtain information from the NDR on behalf of individuals seeking data about themselves. Since these state agencies can more efficiently supply the desired data and, in some instances, can provide a higher quality of information, FRA requires that certification candidates make use of this method in preference to directly contacting NHTSA.

Although the number of state agencies that participate in this manner is limited, FRA anticipates that an increasing number of states will do so in the future. This appendix will be revised periodically to reflect current participation in the program. As of December 31, 1989, the motor vehicle licensing agencies of the following states participate under the provisions of the 1982 changes to the NDR Act: North Dakota, Ohio, Virginia, and Washington.

APPENDIX E TO PART 240—RECOMMENDED PROCEDURES FOR CONDUCTING SKILL PERFORMANCE TESTS

FRA requires (see §240.127 and §240.211) that locomotive engineers be given a skill performance test prior to certification or recertification and establishes certain criteria for the conduct of that test. Railroads are given discretion concerning the manner in which to administer the required testing. FRA has afforded railroads this discretion to allow individual railroad companies latitude to tailor their testing procedures to the specific operational realities. This appendix contains FRA's recommendations for the administration of skill performance testing that occurs during operation of an actual train. It can be modified to serve in instances where a locomotive simulator is employed for testing purposes. These recommended practices, if followed, will ensure a more thorough and systematic assessment of locomotive engineer performance.

The Need for a Systematic Approach

There are numerous criteria that should be monitored when a designated supervisor of locomotive engineers is observing a person to determine whether that individual should be certified or recertified as a qualified locomotive engineer. The details of those criteria will vary for the different classes of service, types of railroads, and terrain over which trains are being operated. At a minimum, the attention of a designated supervisor of locomotive engineers should concentrate on several general areas during any appraisal. Compliance with the railroad's operating rules, including its safety directives and train handling rules, and compliance with Federal regulations should be carefully monitored. But, in order to effectively evaluate employees, it is necessary to have something against which to compare their performance. In order to hold a locomotive engineer accountable for compliance, a railroad must have adequate operating, safety and train handling rules. Any railroad that fails to have adequate operating, safety, or train handling rules will experience difficulty in establishing a objective method of measuring an individual's skill level. Any railroad that requires the evaluation of an individual's performance relative to its train handling rules needs to have established preferred operating ranges for throttle use, brake application, and train speed. The absence of such criteria results in the lack of a meaningful yardstick for the designated supervisor of locomotive engineers to use in measuring the performance of locomotive engineers. It also is essential to have a definite standard so that the engineer and any reviewing body can know what the certification candidate is being measured against.

Evaluating the performance of certain train operation skills will tend to occur in all situations. For example, it would be rare for a designated supervisor of locomotive engineers to observe any operator for a reasonable period of time and not have some opportunity to review that engineer's compliance with some basic safety rules, compliance with basic operating rules, and performance of a brake test. As the complexity of the operation increases, so does the number of items that the operator must comply with.

Higher speeds, mountainous terrain, and various signal systems place increased emphasis on the need for operator compliance with more safety, operating, and train handling rules. Accounting for such variables in any universal monitoring scheme immediately results in a fairly complex system.

FRA therefore recommends that designated supervisors of locomotive engineers employ a written aid to help record events and procedures that as a minimum should be observed for when conducting a skills performance test. FRA is providing the following information to assist railroads in developing such a written aid so as to ensure meaningful testing. When conducting a skills performance test, a designated supervisor of locomotive engineers should be alert to the following:

—Does the employee have the necessary books (Operating Rules, Safety Rules, Timetable, etc.)?
—Are predeparture inspections properly conducted (Radio, Air Brake Tests, Locomotive, etc.)?
—Does the employee comply with applicable safety rules?
—Does the employee read the bulletins, general orders, etc.?
—Enroute, does the employee:
—Comply with applicable Federal Rules?
—Monitor gauges?
—Properly use the horn, whistle, headlight?
—Couple to cars at a safe speed?
—Properly control in train slack and buff forces?
—Properly use the train braking systems?
—Comply with speed restrictions?
—Display familiarity with the physical characteristics?
—Comply with signal indications?
—Respond properly to unusual conditions?
—At the conclusion of the trip, does the employee:
—Apply a hand brake to the locomotives?
—Properly report locomotive defects?

Obviously, the less sophisticated the railroad's operations are, the fewer the number of identified practices that would be relevant. Hence, this list should modified accordingly.

The Need for Objectivity, Use of Observation Form

It is essential that railroads conduct the performance skills testing in the most objective manner possible, whether this testing is the locomotive engineer's initial qualification testing or periodic retesting. There will always be some potential for the subjective views, held by the designated supervisor of locomotive engineers conducting the testing, to enter into evaluations concerning the competency of a particular individual to handle the position of locomotive engineer. Steps can be taken, and need to be taken, to minimize the risk that personality factors adversely influence the testing procedure.

One way to reduce the entry of subjective matters into the qualification procedures is through the use of a document that specifies those criteria that the designated supervisor of locomotive engineers is to place emphasis on. The use of an observation form will reduce but not eliminate subjectivity. Any skill performance test will contain some amount of subjectivity. While compliance with the operating rules or the safety rules is clear in most cases, with few opportunities for deviation, train handling offers many options with few absolute right answers. The fact that an engineer applies the train air brakes at one location rather than a few yards away does not necessarily indicate a failure but a question of judgment. The use of dynamic braking versus air brakes at a particular location may be a question of judgment unless the carrier has previously specified the use of a preferred braking method. In any case the engineer's judgment, to apply or not apply a braking system at a given location, is subject to the opinion of the designated supervisor of locomotive engineers.

A railroad should attempt to reduce or eliminate such subjectivity through use of some type of observation or evaluation. For railroads developing any evaluation form, the areas of concern identified earlier will not be relevant in all instances. Railroads that do not have sophisticated operations would only need a short list of subjects. For example, most smaller railroads would not require line items pertaining to compliance with signal rule compliance or the use of dynamic brakes. Conversely, in all instances the observation forms should include the time and location that the observer started and ended the observation. FRA believes that there should be a minimum duration for all performance skills examinations. FRA allows railroads to select a duration appropriate for their individual circumstances, requiring only that the period be ''of sufficient length to effectively evaluate the person.'' In exercising its discretion FRA suggests that the minimums selected by a railroad be stated in terms of a distance since the examination has to be of a sufficient duration to adequately monitor the operator's skills in a variety of situations. FRA also suggests that the format for the observation form include a space for recording the observer's comments. Provision for comments ideally would allow for the inclusion of ''constructive criticism'' without altering the import of the evaluation and would permit subjective comments where merited.

PART 245—RAILROAD USER FEES

Subpart A—General

Sec.
245.1 Purpose and scope.
245.3 Application.
245.5 Definitions.
245.7 Penalties.

Subpart B—Reporting and Recordkeeping

245.101 Reporting requirements.
245.103 Recordkeeping.
245.105 Retention of records.

Subpart C—User Fee Calculation

245.201 User fee calculation.

Subpart D—Collection Procedures and Duty to Pay

245.301 Collection procedures.
245.303 Duty to pay.

AUTHORITY: 45 U.S.C. 431, 437, 438, 446; 49 CFR 1.49(m).

SOURCE: 57 FR 30602, July 9, 1992, unless otherwise noted.

Subpart A—General

§ 245.1 Purpose and scope.

(a) The purpose of this part is to implement section 216 of the Federal Railroad Safety Act of 1970 (45 U.S.C. 446) (the ''Safety Act'') which requires the Secretary of Transportation to establish a schedule of fees to be assessed equitably to railroads to cover the costs incurred by the Federal Railroad Administration (''FRA'') in administering the Safety Act (not including activities described in section 202(a)(2) thereof).

(b) Beginning in the fiscal year ending September 30, 1991, each railroad subject to this part shall pay an annual user fee to the FRA. For fiscal years 1992 through 1995, the user shall be calculated by FRA in accordance with § 245.101. The Secretary's authority to collect user fees shall expire on September 30, 1995, as provided for in section 216(f) of the Safety Act.

§ 245.3 Application.

This part applies to all railroads except those railroads whose entire operations are confined within an industrial installation.

§ 245.5 Definitions.

As used in this part—

(a) *Employee hours* means the number of hours worked by all employees of the railroad during the previous calendar year.

(b) *FRA* means the Federal Railroad Administration.

(c) *Industrial track* means a switching track serving industries, such as mines, mills smelters, and factories.

(d) *Light density railroad* means railroads with 1200 or less train-miles per road mile.

(e) *Main track* means a track, other than an auxiliary track, extending through yards or between stations, upon which trains are operated by timetable or train order or both, or the use of which is governed by a signal system.

(f) *Passenger service* means both intercity rail passenger service and commuter rail passenger service.

(g) *Railroad* means all forms of nonhighway ground transportation that run on rails or electro-magnetic guideways, including (1) commuter or other short-haul rail passenger service in a metropolitan or suburban area, as well as any commuter rail service which was operated by the Consolidated Rail Corporation as of January 1, 1979, and (2) high speed ground transportation systems that connect metropolitan areas, without regard to whether they use new technologies not associated with traditional railroads. Such term does not include rapid transit operations within an urban area that are not connected to the general railroad system of transportation (*See,* 45 U.S.C. 431(e)).

(h) *Responsible entity* means the railroad subject to this part as of December 31 of the applicable fiscal year (October 1 to September 30), i.e December 31, 1991, for fiscal year 1992, December 31, 1992, for fiscal year 1993, etc.

(i) *Road miles* means the length in miles of the single or first main track, measured by the distance between terminals or stations, or both. Road miles does not include industrial and yard tracks, sidings, and all other tracks not regularly used by road trains operated in such specific service, and lines operated under a trackage rights agreement.

(j) *Safety Act* means the Federal Railroad Safety Act of 1970 (45 U.S.C. 421 *et seq.*)

(k) *Sliding Scale* means the adjustment made to the mile of road of light density railroads. The sliding scale is as follows:

Train miles per road mile	Scaling factor
Up to 500	.0
501 to 750	.25
751 to 1000	.50
1001 to 1200	.75
1201 and above	1.00

The scaling factor is multiplied by the preliminary rate per road mile for each railroad for the year.

(l) *Trackage rights agreement* means an agreement through which a railroad obtains access and provides service over tracks owned by another railroad where the owning railroad retains the responsibility for operating and maintaining the tracks.

(m) *Train* means a unit of equipment, or a combination of units of equipment (including light locomotives) in condition for movement over tracks by self-contained motor equipment.

(n) *Train mile* means the movement of a train a distance of one mile measured by the distance between terminals and/or stations and includes yard switching miles, train switching miles, and work train miles. Yard switching miles may be computed on any reasonable, supportable, and verifiable basis. In the event actual mileage is not computable by other means, yard switching miles may be computed at the rate of 6 mph for the time actually engaged in yard switching service.

(o) *Yard track* means a system of tracks within defined limits used for the making up or breaking up of trains, for the storing of cars, and for other related purposes, over which movements not authorized by timetable, or by train order may be made subject to prescribed signals, rules or other special instructions. Sidings used exclusively as passing track and main line track within yard limits are not included in the term yard track.

§ 245.7 Penalties.

Any person (including a railroad and any manager, supervisor, official, or other employee or agent of a railroad) who violates any requirement of this part or causes the violation of any such requirement is subject to a civil penalty of at least $250 and not more than $10,000 per violation. Civil penalties may be assessed against individuals only for willful violations. Each day a violation continues shall constitute a separate offense. A person may also be subject to the criminal penalties provided for in 45 U.S.C. 438(e) for knowingly and willfully falsifying records or reports required by this part.

Subpart B—Reporting and Recordkeeping

§ 245.101 Reporting requirements.

(a) Each railroad subject to this part shall submit to FRA, not later than March 1st of each year (August 1st, for the fiscal year ending September 30, 1992) a report identifying the railroad's total train miles for the prior calendar year, the total road miles owned, operated under lease, or controlled (but not including trackage rights) by the railroad as of December 31 of the previous calendar year, and the railroad's total number of employee hours for the prior calendar year. An entity shall be considered a railroad subject to this part if it conforms to the definitions found in § 245.5(g) and (h) above. Each railroad shall report all of the data for the entire relevant calendar year whether or not its present operations generated all of the reportable data. This report shall be made on FRA Form 6180.91—Annual Report of Railroads Subject to User Fees and shall be filed by the Responsible Entity (see § 245.5(h)). The report shall include an explanation for an entry of zero for train miles, road miles, or employee hours. Each railroad shall also identify all subsidiary railroads for which it is reporting and provide a breakdown of train miles, road miles, and employee hours for each subsidiary. Finally, each railroad shall enter its corporate billing address for the user fees, and the name, title, telephone number, date, and a signature of the person submitting the form to FRA.

(b) FRA anticipates mailing blank copies of FRA Form 6180.91—Annual Report of Railroads Subject to User

Fees to each railroad during the month of January (the month of July for the fiscal year ending September 30, 1992) for the railroad's use in preparing the report. This action by FRA is for the convenience of the railroads only and in no way affects the obligation of railroads subject to this part to obtain and submit FRA Form 6180.91 to FRA in a timely fashion in the event a blank form is not received from FRA. Blank copies of FRA Form 6180.91 may be obtained from the Office of Safety, FRA, 400 Seventh Street, SW., Washington, DC 20590.

(c) Train miles, as defined in § 245.5(n), shall be calculated by the railroad in accordance with the following considerations:

(1) Each railroad subject to this part is to report the train miles for the freight and passenger service it operates without regard to track or facility ownership.

(2) Train miles are to be reported by both freight and passenger railroads and shall include miles run between terminals or stations, or both, miles run by trains consisting of empty freight cars or without cars, locomotive train miles run, miles run by trains consisting of deadhead passenger equipment, motor train miles run, yard-switching miles run, work train miles, and train switching miles.

(d) Road miles, as defined in § 245.5(i), shall be calculated by the railroad in accordance with the following considerations:

(1) Road miles to be reported shall include all track owned, operated under lease, or controlled by the railroad but shall not include track used under trackage rights agreements. (Note: road miles consisting of leased track are to be reported by the lessee railroad). Road miles consisting of jointly-owned track or track jointly operated under lease shall be reported by the railroad controlling operations over the track. Road miles for a given section of railroad should be reported by only one railroad.

(2) Road miles to be reported shall not include industrial track, yard tracks, sidings, and other tracks not regularly used by road trains operated in such specific service. The determination that a particular track segment qualifies as industrial track or yard track must be made on a reasonable and supportable basis. Road miles do not include track which was out of service for the entire calendar year that is the subject of the user fee report.

(e) Employee hours, as defined in § 245.5(a), shall be calculated by the railroad in accordance with the following considerations: Employees hours to be reported include the number of hours worked by all railroad employees, regardless of occupation, during the previous calendar year. Include all employees in the occupational categories shown in appendix D of the FRA Guide for Preparing Accident/Incident Reports. Employee hours do not include time paid but not actually worked, such as holidays, vacations, etc. Employee hours do not include hours worked by volunteers. Employee hours do not include hours worked by individuals not employed directly by the reporting railroad (i.e. contractor employees).

(f) In computing both train miles and road miles, fractions representing less than one-half mile shall be disregarded and other fractions considered as one mile.

(g) Each railroad subject to this part has a continuing obligation to assure that the information provided to FRA on Form 6180.91—Annual Report of Railroads Subject to User Fees is accurate. Should a railroad learn at a later date that the information provided was not correct, it shall submit a revised Form 6180.91 along with a letter explaining in detail the discrepancy.

(h) Each railroad subject to this part has an obligation to assure that the information provided to FRA under this part is consistent with information provided to FRA under other reporting requirements, in particular reports submitted under 49 CFR part 225—Railroad Accidents/Incidents: Reports Classification, and Investigations. The railroad shall fully explain and resolve any discrepancies.

(i) The FRA has prepared a questionnaire entitled ''Written Questionnaire on Whether Your Company Is A 'Railroad' Subject To FRA User Fee Regulations'' (FRA Form 6180.90) in order to assist in determining whether certain

entities meet the definition of ''railroad'' included in § 245.5 or constitute railroads whose entire operations are confined within an industrial installation (''plant railroads'') excluded from this part under § 245.3. Copies of FRA Form 6180.90 are available from the Office of Safety, FRA, 400 Seventh Street, SW., Washington, DC 20590.

§ 245.103 Recordkeeping.

Each railroad subject to this part shall maintain adequate records supporting its calculation of the railroad's total train miles for the prior calendar year, total road miles as of December 31 of the previous calendar year, and the total employee hours for the previous calendar year. Such records shall be sufficient to enable the FRA to verify the information provided by the railroad on FRA Form 6180.91—Annual Report of Railroads Subject to User Fees. Such records shall also be available for inspection and copying by the Administrator or the Administrator's designee during normal business hours.

§ 245.105 Retention of records.

Each railroad subject to this part shall retain records required by § 245.103 for at least three years after the end of the calendar year to which they relate.

Subpart C—User Fee Calculation

§ 245.201 User fee calculation.

(a) The fee to be paid by each railroad shall be determined as follows:

(1) After March 15th of each year (August 1st for the fiscal year ending September 30, 1992), FRA will tabulate the total train miles, total employee hours, and total road miles for railroads subject to this part for the preceding calendar year. FRA's calculations will be based on the information supplied by railroads under § 245.101 hereof, and other reports and submissions which railroads are required to make to FRA under applicable regulations (i.e. 49 CFR parts 225 and 228). At the same time, FRA will calculate the total cost of administering the Safety Act for the current fiscal year (other than activities described in section 202(a)(2) thereof) which will represent the total amount of user fees to be collected.

(2) Using tabulations of total train miles, total employee hours, total road miles, and the total cost of administering the Safety Act, FRA will calculate a railroad's user fee assessment as follows:

(i) The assessment rate per train mile will be calculated by multiplying the total costs of administering the Safety Act by 0.55 and then dividing this amount (i.e., fifty-five percent of the total amount to be collected) by the total number of train miles reported to the FRA for the previous calendar year. The result will be the railroad user fee assessment rate per train mile for the current fiscal year.

(ii) The assessment rate per employee hour will be calculated by multiplying the total costs of administering the Safety Act by 0.1 and then dividing this amount (i.e., 10 percent of the total amount to be collected) by the total number of employee hours reported to the FRA for the previous calendar year. The result will be the railroad user fee rate per employee hour for the fiscal year.

(iii) The assessment rate per road mile will be calculated in three steps. First, FRA will determine a preliminary assessment rate per road mile by multiplying the total costs of administering the Safety Act by 0.35 and dividing this amount (i.e., thirty-five percent of the total amount to be collected) by the total road miles reported to FRA for the previous calendar year. Second, FRA will adjust this preliminary rate per road mile for each light density railroad by multiplying the preliminary rate by the appropriate scaling factor identified in § 245.5(h). The result will be a reduced assessment rate per road mile for light density railroads. Third, FRA will adjust the preliminary assessment rate per road mile for all railroads except light density railroads by adding to their preliminary rate an incremental amount reflecting the reallocation of the relief provided to light density railroads under step 2 using the sliding scale. The incremental amount is calculated by subtracting (A) the total amount to be collected from light density railroads after application of the sliding scale from (B) the total amount that would have been collected from light

density railroads using the preliminary assessment rate and developed under step 1 and (C) dividing the resulting amount by the total road miles reported to FRA by all railroads except light density railroads. The incremental amount is then added to the preliminary assessment rate for all railroads except light density railroads to derive the assessment rate per road mile for all railroads except light density railroads. The results will be a modified assessment rate per road mile for light density railroads qualifying under step 2 and a general assessment rate applicable to all other railroads. In those cases where the computed fee is less than the defined minimum, the net increase attributable to the application of the minimum standard is not included in the reallocation process under step 3 and is instead added to total collections.

(b) The user fee to be paid by each covered railroad is the greater of $500.00 or the sum of the railroad's train miles times the assessment rate per train mile, the railroad's employee hours times the assessment rate per employee hour, and the railroad's road miles times the applicable assessment rate per road mile.

Subpart D—Collection Procedures and Duty to Pay

§ 245.301 Collection procedures.

(a) After March 15th of each year (August 15th for the fiscal year ending September 30, 1992), FRA will publish in the FEDERAL REGISTER a notice containing FRA's preliminary estimates of the total user fee to be collected, the assessment rate per train mile, the assessment rate per employee hour, and the assessment rate per road mile (as adjusted by the sliding scale). The information published by FRA will be sufficient to enable each railroad to calculate its estimated user fee bill for the fiscal year on the basis of the train mile, employee hour, and road mile information provided by the railroad to FRA.

(b) After June 1st of each year, (August 15th for the fiscal year ending September 30, 1992), FRA will provide to each covered railroad a notice (the ''Assessment Notice'') containing FRA's final calculations of the total user fee to be collected, the assessment rate per train mile, the assessment rate per employee hour, the assessment rate per road mile (as adjusted by the sliding scale), the train miles, employee hours, and road miles for the railroad for the prior calendar year, the user fee to be paid by the railroad, and a statement and payment record form. FRA will mail the Assessment Notice sufficiently in advance of the end of the fiscal year in order to allow all collections to be completed prior to the end of the fiscal year. FRA will mail the Assessment Notice to the billing address designated by the railroad on FRA Form 6180.91—Annual Report of Railroads Subject to User Fees.

§ 245.303 Duty to pay.

(a) Beginning in the fiscal year ending September 30, 1991, each railroad subject to this part shall pay an annual railroad user fee to the FRA. Payment in full shall be received by FRA no later than thirty days after the Assessment Notice is mailed. Payment is made only when received by FRA. Payments in excess of ten thousand dollars ($10,000.00) shall be made by wire transfer through the Federal Reserve communications, commonly known as Fedwire, to the account of the U.S. Treasury in accordance with the instructions provided in the Assessment Notice. Payments of ten thousand dollars or less shall be by check or money order payable to the Federal Railroad Administration. The payment shall be identified as the railroad's user fee by noting it with the User Fee Bill Number as assigned by FRA and by returning the payment record received with the Assessment Notice. Payment shall be sent to the address stated in the assessment notice. Any railroad making an aggregate payment for one or more subsidiaries or affiliates should return the payment records for each and list all applicable Bill Numbers with the payment.

(b) The responsibility for paying the user fee rests with the responsible entity (see § 245.5(h)). Parties involved in purchase and sale transactions of railroad(s) or portions of a railroad shall be responsible for allocating the user fee amongst the interested entities in

an appropriate fashion. FRA will not prorate user fee bills.

(c) No user fee will be collected from railroads that properly report zero train miles and zero road miles on FRA Form 6180.91—Annual Report of Railroads Subject to User Fees.

(d) Payments not received by the due date will be subject to allowable interest charges, penalties, and administrative charges (31 U.S.C. 3717). Follow-up demands for payment and other actions intended to assure timely collection, including referral to local collection agencies or court action, will be conducted in accordance with Federal Claims Collection Standards (4 CFR chapter II) and Departmental procedures (49 CFR 89).

PART 250—GUARANTEE OF CERTIFICATES OF TRUSTEES OF RAILROADS IN REORGANIZATION

Sec.
250.1 Form and content of application.
250.2 Required exhibits.
250.3 Fees.
250.4 Execution and filing of application.
250.5 General instructions.

AUTHORITY: Sec. 3(f) of the Emergency Rail Services Act of 1970, Pub. L. 91–663; sec. 1.49(m), regulations of the Office of the Secretary of Transportation, 49 CFR 1.49(m).

SOURCE: 36 FR 770, Jan. 16, 1971, unless otherwise noted.

§250.1 Form and content of application.

The application shall include, in the order indicated and by section numbers and letters corresponding to those used in this part, the following:

(a) *As to the Trustee:*

(1) Full and correct name and principal business address.

(2) The name and address of the reorganization court under the direction of which the Trustee is acting and the docket number of the proceeding.

(3) Name, title, and address of the person to whom correspondence regarding the application should be addressed.

(4) Brief description of the loan and its purpose or purposes, including statements of

(i) The total amount of the loan and the amount of the guarantee being sought,

(ii) The purpose or purposes for which the loan proceeds will be used,

(iii) The maturity date or dates,

(iv) The date or dates on which the Trustee desires the funds to be made available, and

(v) The rate of interest.

(5) Statement, in summary form, showing financial obligations to or claims against the United States or obligations for which the United States is guarantor, if any, by applicant or any applicant's parent as to the date of the application, including:

(i) Status of any claims under litigation; and

(ii) Any other debts or credits existing between the applicant and the United States, showing the department or agency involved in such loans, claims and other debts;

(6)(i) Statement on behalf of the Trustee that the Trustee has endeavored to obtain a loan or loans for the purpose or purposes proposed without a guarantee by the Secretary, but has not been able to obtain a loan therefor upon reasonable terms, or if only upon terms considered unreasonable, a statement setting forth such terms and describing any facts relevant thereto.

(ii) Information as to the Trustee's efforts to obtain the needed financing without a guarantee thereof by the Secretary, and as to the results of such efforts. (See §250.2(b)(1) as to exhibits on this subject.)

(7) Full and complete statement, together with independent supporting evidence, where feasible, concerning the effect that cessation of essential transportation services of carrier would have on the public welfare.

(8) Full and complete statement, together with supporting evidence, where possible, demonstrating that cessation of essential transportation services by applicant carrier is imminent.

(9) Full and complete statement, together with supporting evidence, if possible, that there is no other practicable means of obtaining funds to meet payroll and other expenses necessary to provide essential transportation services other than the issuance of Trustee

certificates. Such statements shall include in detail a complete listing of all nontransportation assets of the carrier and corporate affiliates, or subsidiaries having a fair market value of not less than $50,000, together with the amount of encumbrances thereon, if any, and a statement or plan for the disposition or sale of such assets as a means of obtaining funds necessary for essential transportation services.

(10) Full and complete statement, together with supporting evidence, if possible, demonstrating, with particularity, that the carrier can reasonably be expected to become self sustaining within a reasonable period of time.

(11) Full and complete statement, together with supporting evidence, that the probable value of the assets of the carrier in the event of liquidation provides reasonable protection to the United States.

(b) *As to the holder or holders:*

(1) Full and correct name and principal business address.

(2) Names and addresses of principal executive officers and directors, or partners.

(3) Reference to applicable provisions of law and the charter or other governing instruments conferring authority to the lender to make the loan and to accept the proposed obligation.

(4) Brief statement of the circumstances and negotiations leading to the agreement by the lender to make the proposed loan, including the name and address of any person or persons, or employees of the carrier, representing or purporting to represent the Trustee in connection with such negotiations.

(5) Brief statement of the nature and extent of any affiliation or business relationship between the lender and any of its directors, partners, or principal executive officers, on the one hand, and, on the other, the carrier and any of its directors, partners, or principal executive officers, or any person or persons whose names are required to be furnished under paragraph (b)(4) of this section.

(6) Full and complete statement of all sums paid or to be paid and of any other consideration given or to be given by lender in connection with the proposed loan, including with respect thereto:

(i) Name and address of each person to whom the payment is made or to be made,

(ii) The amount of the cash payment, or the nature and value of other consideration,

(iii) The exact nature of the services rendered or to be rendered,

(iv) Any condition upon the obligation of the lender to make such payment, and

(v) The nature of any affiliation, association, or prior business relationship between any person named in answer to paragraph (6)(i) of this section and the lender or any of its directors, partners, or officers.

(c) *As to the impact of the financing on the environment.* (1) Summary statement of the use to which funds will be put and any anticipated impact on the environment. After reviewing this submission, the Administrator retains the right to require the Trustee to submit a detailed assessment of the financing's impact on the environment in a general format to be supplied by the Administrator.

(2) [Reserved]

[44 FR 23851, Apr. 23, 1979]

§ 250.2 Required exhibits.

There shall be filed with and made a part of each application and copy thereof the following exhibits, except that exhibits filed with the Administrator pursuant to some other statutory provision or regulation which are in the same format as the following exhibits may be incorporated in and made part of the application filed under this part by reference. While the application is pending, when actual data become available in place of the estimated or forecasted data required in the exhibits under this part, such actual data must be reported promptly to the Administrator in the form required in the appropriate exhibit.

(a) The following exhibits are required concerning the Trustee and the carrier:

(1) As Exhibit 1, copy of duly certified order of the court, or instrument of appointment, appointing trustees of the carrier.

(2) As Exhibit 2, a certified copy of the order(s) of the reorganization court having jurisdiction of applicant authorizing (i) the filing of the application with the Administrator for a guarantee of the Trustee's certificate; (ii) filing of the application with the Interstate Commerce Commission for authority to issue a Trustee's certificate; (iii) such pledge of security for the loan and the guarantee as the applicant proposes in connection with Exhibit 3; and (iv) compliance by the Trustee with conditions to the guarantee imposed by law and the Administrator.

(3) As Exhibit 3, full and complete statement, together with supporting evidence, that the probable value of the assets of the railroad in the event of liquidation provides reasonable protection to the United States.

(4) As Exhibit 4, a map of the carrier's existing railroad.

(5) As Exhibit 5, statement showing miles of line owned; miles operated; number of units of locomotives, freight cars, and passenger cars owned and leased; principal commodities carried; and identification of the ten most important industries served.

(6) As Exhibit 6, statement as to whether any railroad affiliated with the carrier has applied for or received any Federal assistance since 1970.

(7) As Exhibit 7, statement showing total dividends, if any, declared and total dividends paid for each of the last 5 calendar years and for each month of the current year to latest available date.

(8) As Exhibit 8, a copy of applicant's most recent year-end general balance sheet certified by applicant's independent public accountants, if available, and a copy of applicant's most recent unaudited general balance sheet as of a date no less recent than the end of the third month preceding the date of the filing of the application. The unaudited balance sheet shall be presented in account form and detail as required in Schedule 200 of the Commission's annual report R–1 or R–2, as appropriate, together with the following schedules (where changes in accounts from the end of the prior year to date of the application have not been significant, copies of the appropriate schedules in the prior year's R–1 or R–2 with marginal notations listing the changes may be substituted):

(i) Particulars of Account 704, Loans and Notes Receivable, in form and detail as required in Schedule 201 of annual report R–1 for the Class I railroads, and in similar form for the Class II railroads except that for Class II railroads, loans and notes receivable that are each less than $25,000 may be combined into a single amount;

(ii) Particulars of investment in affiliated companies and other investment in form and detail required in Schedules 205 and 206 of annual report R–1, or Schedules 1001 and 1002 of annual report R–2, as appropriate;

(iii) Particulars of balances in Accounts 741, Other Assets, and 743, Other Deferred Changes, in form and detail required in Schedule 216 of annual report R–1 or Schedule 1703 of annual report R–2, as appropriate;

(iv) Particulars of loans and notes payable in form and detail required in Schedule 223 of annual report R–1, or Schedule 1701 of annual report R–2, as appropriate, as well as information as to bank loans, including the name of the bank, date and amount of the original loan, current balance, maturities, rate of interest, and security, if any;

(v) Particulars of long-term debt in form and detail required in Schedules 218 and 219 of annual report R–1 or Schedules 670, 695, 901, 902 and 1702 of annual report R–2, as appropriate, together with a brief statement concerning each mortgage, pledge, and other lien, indicating the property or securities encumbered, the mortgage limit per mile, if any, and particulars as to priority;

(vi) Particulars of balance in Account 784. Other Deferred Credits, in form and detail required in Schedule 225 of annual report R–1 or Schedule 1704 of annual report R–2, as appropriate; and

(vii) Particulars as to capital stock in form and detail required in Schedules 228, 229, and 230 of annual report R–1 or Schedule 690 in annual report R–2, as appropriate.

(9) As Exhibit 9, a copy of carrier applicant's report to its stockholders or report of the trustee for each of the 3 years preceding the year in which the application is filed.

(10) As Exhibit 10, applicant's most recent annual income statement certified by applicant's independent public accounts if available, and a spread sheet showing unaudited monthly and year-to-date income statement data for the calendar year in which the application is filed in account form similar to that required in column (a) of Schedule 300 of annual report R–1 or R–2 as appropriate. For those months preceding and ending upon the date of the unaudited balance sheet presented in Exhibit 8, the income statement shall be reported on an actual basis and so noted. For those months between the dates of the unaudited balance sheet and the filing of the application, the income statement data shall be reported on an estimated basis and so noted and shall be submitted in conjunction with corresponding estimated month-end balance sheets. For those months between the date of the application and the end of the year income statement data shall be presented on a forecasted basis and so noted and shall be submitted in conjunction with a forecasted balance sheet as at the year end.

(11) As Exhibit 11, spread sheets showing for each of the four years subsequent to the year in which the application is filed, both before and after giving effect to the proceeds of the assistance required in the application:

(i) Forecasted annual income statement data in account form and detail similar to that required in column (a) of Schedule 300 of annual report R–1 or R–2 as appropriate, including the subaccounts comprising line 2 (railway operating expenses), as specified by lines 64, 92, 105, 159, 166, and 180 of Schedule 320; and

(ii) Forecasted year-end balance sheets in account form and detail similar to that required in Schedule 200 of annual report R–1 or R–2, as appropriate. These spread sheets shall be accompanied by a statement setting forth the bases for such forecasts.

(12) As Exhibit 12, a spread sheet showing changes in financial position for the year in which the application is filed in account form and detail as required in Schedule 309 of annual report R–1 and R–2 as appropriate as follows:

(i) For that period ending on the date of the unaudited balance sheet in Exhibit C, based upon actual data; and

(ii) For that period from the balance sheet date to the end of the year, based upon estimated and forecasted data.

(13) As Exhibit 13, a spread sheet showing forecasted changes in financial position for each of the four calendar years subsequent to the year in which the application is filed, both before and after giving effect to any funds requested in the application and including a statement showing the bases for such estimates, in account form and detail as required in Schedule 309 of the annual Report R–1 for Class I railroads in similar form and detail for Class II railroads.

(14) As Exhibit 14, a statement showing actual cash balance at the beginning of each month and the actual cash receipts and disbursements during each month of the current year to the date of the latest balance sheet furnished as Exhibit 8, together with a monthly forecast (both before and after giving effect to use of proceeds from the proposed loan) for the balance of the current year and the year subsequent thereto.

(15) As Exhibit 15, a general statement setting forth the facts as to estimated prospective earnings and other funds upon which applicant relies to repay the loan.

(b) The following exhibits are required as to the transaction.

(1) As Exhibit 16, copies of correspondence from all, and not less than three, lending institutions or security underwriters to which application for the financing has been made, evidencing that they have declined the financing unless guaranteed by the Secretary or specifying the terms upon which they will undertake the financing without such guarantee.

(2) As Exhibit 17, specimens, or forms where specimens are not available, of all securities to be pledged or otherwise issued in connection with the proposed loan; and in case of mortgage, a copy of the mortgage or indenture.

(3) As Exhibit 18, copies of the loan agreement entered into, or to be entered into, between the Trustee and

lender, and of any agreements or instruments executed or be executed in connection with the proposed loan.

[44 FR 23852, Apr. 23, 1979]

§250.3 Fees.

On date of final payment of the loan guaranteed by the Secretary pursuant to application filed under this part, the applicant carrier or the trustee, if still in existence, shall pay, or cause to be paid, to the Administrator as a guarantee fee such amount as the Administrator hereafter may determine and prescribe as necessary to cover the administrative costs of carrying out the provisions of the Emergency Rail Services Act of 1970.

§250.4 Execution and filing of application.

The following procedure shall govern the execution and filing of the application:

(a) The original application shall bear the date of execution and be signed with ink by or on behalf of the trustee and the lender. Execution on behalf of the trustee shall be by the trustee or trustees having knowledge of the matters therein set forth. Persons signing the application on behalf of the trustee and lender, respectively, shall also sign a certificate in form as follows:

(Name of official) _____ certifies that he is the _____ (title of official) of the _____ (name of carrier or lender); that he is authorized on the part of said applicant to sign and file with the Administrator this application and exhibits attached thereto; that he has carefully examined all of the statements contained in such application and the exhibits attached thereto and made a part thereof relating to the aforesaid _____ (name of carrier or lender); that he has knowledge of the matters set forth therein and that all such statements made and matters set forth therein are true and correct to the best of his knowledge, information, and belief.

(Date)

(b) There shall be made a part of the original application the following certificate by the Chief Accounting Officer of the carrier:

(Name of officer) _____, certifies that he is _____ (title of officer) of _____ (name of carrier applicant); that he has supervision over the books of account and other financial records of the carrier and has control over the manner in which they are kept; that such accounts are maintained in good faith in accordance with the effective accounting and other orders of the Interstate Commerce Commission; that he has examined the financial statements and supporting schedules included in this application and to the best of his knowledge and belief said statements accurately reflect the accounts as stated in the books of account; and that, other than the matters set forth in the exceptions attached to such statements, said financial statements and supporting schedules represent a true and complete statement of the financial position of the carrier applicant and that there are no undisclosed assets, liabilities, commitments to purchase property or securities, other commitments, litigation in the courts, contingent rental agreements, or other contingent transactions which might materially affect the financial position of the carrier applicant.

(Date)

(c) The original application and supporting papers, and six copies thereof for the use of the Administrator shall be filed with the Administrator, Federal Railroad Administration, Department of Transportation, Washington, DC. Simultaneously, one copy of the application and supporting papers shall be filed with the Secretary of the Interstate Commerce Commission, Washington, DC. Each copy shall bear the dates and signatures that appear in the original and shall be complete in itself, but the signatures in the copies may be stamped or typed. If unusual difficulties arise in the furnishing of any of the exhibits required in §250.2, the carrier applicant or the lender, upon appropriate showing and with the consent of the Administrator, may file a lesser number.

(d) In the event the furnishing of exhibits in the detail required by §250.2 is shown by the applicant or applicants to be unduly burdensome in relation to the nature and amount of the loan, the Administrator may modify the requirements of said section. In addition, the Administrator may waive or modify any requirement of this part upon good cause shown, or make any additional requirements he deems necessary.

§ 250.5 General instructions.

(a) If the application is approved by the Administrator and the Secretary of Transportation and the latter agrees to make the guarantee, the following documents will be required for deposit with the Administrator before the transaction is closed:

(1) Final opinion by counsel for the Trustee to the effect that he is familiar with the corporate powers of the carrier applicant and the orders of the reorganization court; that the Trustees of the carrier applicant are authorized to execute and deliver the certificate or other obligations evidencing the same, and to pledge and hypothecate any securities pledged as collateral; that the certificate or other obligations so executed and so delivered constitute the valid and binding obligations of the Trustees of the carrier that the certificate or other obligations of the Trustee will be treated as an expense of administration and receive the highest lien on the railroads property and priority in payment under the Bankruptcy Act, and that the lender and the Secretary will obtain a lien on any security involved of the rank and priority represented by the Trustee. Such opinion shall also cover the priority and lien of each item of the collateral offered.

(2) Certified copies of the reorganization court orders and decrees authorizing the Trustee to execute and deliver the certificates or other obligations and to give the security under and according to the terms of the loan and guarantee as prescribed by the Administrator. Such order or orders of the reorganization court shall specify that trustee certificates, guaranteed by the Secretary as to payment of principal and interest, shall be treated as an expense of administration and receive the highest lien on the railroad's property and priority in payment under the Bankruptcy Act.

(3) Unexecuted copies of the foregoing documents will be delivered to the Administrator 3 business days prior to closing.

(b) The guarantee by the Secretary of a loan pursuant to an application filed as provided in this part should not be construed as relieving a carrier from complying with applicable provisions of section 20a of the Interstate Commerce Act (49 U.S.C. 20a) in relation to the issuance of Trustee certificates.

PART 256—FINANCIAL ASSISTANCE FOR RAILROAD PASSENGER TERMINALS

REGULATIONS GOVERNING APPLICATIONS FOR AND DISBURSEMENT OF FINANCIAL ASSISTANCE

Sec.
256.1 Purpose.
256.3 Definitions.
256.5 Eligibility.
256.7 Financial assistance.
256.9 [Reserved]
256.11 Applications.
256.13 Review and approval of applications.
256.15 Disbursement of financial assistance.

APPENDIX A TO PART 256—CERTIFICATE

AUTHORITY: Sec. 4(i) of the Department of Transportation Act, 49 U.S.C. 1653(i), as amended by (1) sec. 15 of the Amtrak Improvement Act of 1974, Pub. L. 93–496, 88 Stat. 1528; (2) sec. 13 of the Amtrak Improvement Act of 1975, Pub. L. 94–25, 89 Stat. 93; (3) sec. 706 of the Railroad Revitalization and Regulatory Reform Act of 1976, Pub. L. 94–210, 90 Stat. 125; and (4) sec. 219(a) of the Rail Transportation Improvement Act, Pub. L. 94–555, 90 Stat. 2629; and regulations of the Office of the Secretary of Transportation, 49 CFR 1.49(r).

REGULATIONS GOVERNING APPLICATIONS FOR AND DISBURSEMENT OF FINANCIAL ASSISTANCE

§ 256.1 Purpose.

The purpose of this part is to establish procedures for implementing subsection 4(i) of the Department of Transportation Act as amended (49 U.S.C. 1653(i)) with respect to all financial assistance provided under that subsection.

[40 FR 29080, July 10, 1975]

§ 256.3 Definitions.

As used in this part—

(a) *Act* means the Department of Transportation Act, as amended.

(b) *Administrator* means the Federal Railroad Administrator, or his delegate.

(c) *Allowable project costs* means those project costs for which Federal financial assistance may be expended under § 256.7.

(d) *Applicant* means a governmental entity, a non-profit public-purpose organization, or any responsible person having the legal, financial, and technical capacity to implement an intermodal passenger terminal project under this part. The applicant must have legal authority to receive and expend Federal funds.

(e) *Chairman* means the Chairman of the National Endowment for the Arts.

(f) *Civic and cultural activities* includes, but is not limited to, museums, libraries, musical and dramatic presentations, art exhibitions, adult education programs, public meetings of community groups, convention visitors and others, and other public activities supported in whole or in part under Federal law.

(g) *Council* means the Advisory Council on Historic Preservation.

(h) *Demonstration funds* means funds authorized for the purpose set forth in paragraph (1)(A) of subsection 4(i) of the Act.

(i) *Intermodal passenger terminal* means an existing railroad passenger terminal which has been or may be modified as necessary to accommodate several modes of transportation, including intercity rail service and some or all of the following: Intercity bus, commuter rail, intra-city rail transit and bus transportation, airport limousine service and airline ticket offices, rent-a-car facilities, taxis, private parking, and other transportation services.

(j) *National Register* means the National Register of Historic Places maintained by the Secretary of the Interior.

(k) *Planning funds* means funds authorized for the purpose set forth in paragraph (1)(D) of subsection 4(i) of the Act.

(l) *Preservation funds* means funds authorized for the purpose set forth in paragraph (1)(B) of subsection 4(i) of the Act.

(m) *Project* means a locally sponsored, coordinated, and administered program, or any part thereof, to plan, finance, construct, maintain, or improve an intermodal passenger terminal, which may incorporate civic or cultural activities where feasible in an architecturally or historically distinctive railroad passenger terminal.

(n) *4R Act* means the Railroad Revitalization and Regulatory Reform Act of 1976, as amended, Public Law 94–210, 90 Stat. 125, 49 U.S.C. 1653.

(o) *Sufficient commitments* means commitments of a binding nature adequate to ensure the successful operation of a project. Such commitments may be conditional, requiring, for example, the participation of other entities in the project, or action by a date certain.

[40 FR 29080, July 10, 1975, as amended at 43 FR 21887, May 22, 1978; 44 FR 21647, Apr. 11, 1979]

§256.5 Eligibility.

(a) *General.* A project is eligible for financial assistance under subsection 4(i) of the Act if:

(1) The applicant provides satisfactory assurance that such fiscal control and fund accounting procedures will be adopted as may be necessary to assure proper disbursement of and accounting for Federal financial assistance granted to the applicant under the Act;

(2) The applicant complies with the regulations of the Administrator prescribed in this part, and with such other terms and conditions as may be included in the grant of assistance; and

(3) The Council is given a reasonable opportunity to review and comment upon the project as it affects property listed or eligible for listing on the National Register.

(b) *Demonstration funds.* A project is eligible for financial assistance in accordance with subsection 4(i) of the Act if the Administrator determines that:

(1) The railroad passenger terminal can be converted to an intermodal passenger terminal;

(2) There exist sufficient commitments by Amtrak or other rail passenger carriers, and by intercity bus carriers, the local public transportation authority, or other public or private transportation operators, to provide co-ordinated service for convenient intermodal interchange to meet the goals enumerated in paragraph (b) of §256.13;

(3) The railroad passenger terminal is listed on the National Register;

(4) The architectural integrity of the railroad passenger terminal will be preserved, and this determination is concurred in by the consultants recommended by the Chairman and Council and retained by the Administrator for this purpose;

(5) To the extent practicable, the use of station facilities for transportation purposes may be combined with use for other civic and cultural activities, especially when such use is recommended by the Council or the Chairman, or the consultants retained by the Administrator upon their recommendation;

(6) The applicant has provided the information and documentation required under § 256.11(c).

(7) The railroad passenger terminal and the conversion project meet such other criteria as the Administrator may develop and promulgate in consultation with the Chairman and the Council.

(c) *Preservation funds.* A project is eligible for financial assistance in accordance with subsection 4(i) of the Act if the Administrator determines that:

(1) The applicant is empowered by applicable law, and is qualified, prepared, and committed, on an interim basis pending the formulation of plans for reuse, to maintain and prevent the demolition, dismantling, or further deterioration of, a railroad passenger terminal;

(2) The railroad passenger terminal is threatened with demolition, dismantling, or further deterioration;

(3) There is a reasonable likelihood that the railroad passenger terminal will be converted to or conditioned for reuse as an intermodal passenger terminal. The primary use of the terminal shall be for intermodal purposes, but facilities for the provision of civic and cultural activities may be incorporated to the extent feasible. Such dual use of the terminal is particularly encouraged when it is recommended by the Council or the Chairman.

(4) Planning activity aimed at conversion or reuse has commenced and is proceeding in a competent manner;

(5) The expenditure of funds on such project would be in the manner most likely to maximize the preservation of railroad passenger terminals which are:

(i) Reasonably capable of conversion to intermodal passenger terminals;

(ii) Listed in the National Register; or

(iii) Recommended on the basis of architectural integrity and quality by the Chairman or the Council; and

(6) The applicant has provided the information and documentation required by § 256.11(d).

(d) *Planning funds.* A project is eligible for financial assistance in accordance with subsection 4(i)(5) of the Act if the Administrator determines that:

(1) The applicant is prepared to develop practicable plans meeting the zoning, land use, and other requirements of the applicable State and local jurisdictions in which the rail passenger terminal is located;

(2) The applicant incorporates into its plans for the conversion of an historic terminal into an intermodal passenger terminal, features which appear reasonably likely to attract private investors willing to finance the planned conversion and/or its subsequent maintenance and operation. The primary use of the terminal shall be for intermodal purposes, but facilities for the provision of civic or cultural activities may be incorporated to the extent feasible.

(3) The applicant will be able to complete the designs and plans for such conversion within two years following the approval of the application for Federal financial assistance;

(4) The expenditure of funds on such project would be in the manner most likely to maximize the preservation of railroad passenger terminals which are listed in the National Register or recommended on the basis of architectural integrity and quality by the Chairman or the Council; and

(5) The applicant has provided the information and documentation required under § 256.11(e).

[40 FR 29080, July 10, 1975, as amended at 43 FR 21887, May 22, 1978; 44 FR 21647, Apr. 11, 1979]

§ 256.7 Financial assistance.

(a) *Demonstration funds.* Federal financial assistance for the conversion of a railroad passenger terminal into an intermodal passenger terminal, under

subsection 4(i)(2) of the Act, may be expended for the following project costs incurred after the date of final project approval:

(1) Acquisition or long-term lease of real property or other property interests, including air rights, subterranean rights, or easements, where necessary for project implementation;

(2) Final architectural and engineering construction documentation, including all necessary plans, specifications, detailed cost estimates, and implementation schedules; and

(3) Construction, which may include, but is not limited to:

(i) Complete rehabilitation and refurbishment of the interior and exterior of the structure;

(ii) Provision of necessary public service facilities;

(iii) Structural modifications and minor additions necessary to permit the development of (A) improved rail passenger facilities, (B) intercity bus terminal and docking facilities, (C) adequate facilities for local mass transit, and (D) parking and access for automobiles and bicycles; and

(iv) Provisions for accommodating major tenants and concessionaires such as airline ticket offices, rent-a-car offices, and other transportation service facilities.

(b) *Preservation funds.* Federal financial assistance under subsection 4(i)(3) of the Act, for the preservation of a railroad passenger terminal which has a reasonable likelihood of being converted or otherwise maintained, may be expended for costs incurred after the date of project approval which are necessary to maintain (and prevent the demolition, dismantling, or further deterioration of) a railroad passenger terminal pending the completion of project planning, for a period not to exceed five years.

(c) *Planning funds.* Federal financial assistance granted under subsection 4(i)(5) of the Act for the development of plans for the conversion of a railroad passenger terminal into an intermodal passenger terminal, which may incorporate civic and cultural activities where feasible, may be expended for the following project costs if incurred within two years after project approval:

(1) Cost of a study or studies to:

(i) Assess the need for and the feasibility of converting an existing railroad passenger terminal into an intermodal passenger terminal which may incorporate civic and cultural activities where feasible;

(ii) Develop a fiscal plan and agreements for the plan's implementation; and

(iii)(A) Relate the project to other transportation priorities in the area; and

(B) Evaluate alternate means of providing needed intermodal passenger services within the community.

(2) Costs of preparation of preliminary architectural and engineering design documents for the project, including:

(i) Plans, sections, and sketches illustrating the functional as well as preservation aspects of the recommended development;

(ii) Assessment of the condition of existing structural and utilities systems and requirements for their improvement;

(iii) Outline specifications and preliminary estimates of project costs; and

(iv) Required environmental impact reviews and analyses.

(d) *Federal share.* The Federal share of any project under this part shall not exceed 80 percent of the total allowable project costs. The non-Federal share may not be augmented by any Federal funds, directly or indirectly, unless the funds are provided through a Federal program which specifically authorizes the augmentation of a non-Federal share of a federally-assisted program with such funds.

[40 FR 29080, July 10, 1975, as amended at 43 FR 21887, May 22, 1978; 44 FR 21647, Apr. 11, 1979]

§ 256.9 [Reserved]

§ 256.11 Applications.

(a) *Incorporation by reference in application of previously submitted information or material.* Any information or material of any kind which has been submitted by an applicant need not be resubmitted if the prior submission is identified and incorporated by reference in

the application. Where the prior submission is in need of any changes of any kind, the changes may be submitted provided the prior submission is identified and incorporated by reference with the changes. Any assurance, certification, or affirmation previously made by the applicant, in connection with a prior submission, must be reaffirmed by the applicant when any identification and incorporation by reference of previously submitted materials is made.

(b) *Pre-applications for demonstration funds.* In accordance with appendix M of Office of Management and Budget Circular A–102, applicants shall use the pre-application form directed for use for construction, land acquisition, and land development projects when applying for demonstration funds under this program. Applicants shall include under Part IV (Program Narrative) of the pre-application form:

(1) A statement of whether the railroad passenger terminal is listed in the National Register;

(2) A statement as to the interest and anticipated cooperation of the terminal owner and the relevant transportation companies;

(3) Where the applicant contemplates using funds it has received or will receive from other Federal programs for the planning or preservation stage of the projects, a brief description of the sources, and total anticipated amount of such funds; and

(4) A breakdown of the total allowable project costs.

(c) *Applications for demonstration funds.* Upon notification of the approval of the pre-application, applicants shall submit a final application for demonstration funds using the Federal Assistance Application for Construction Programs in accordance with appendix M of Office of Management and Budget Circular A–102. Applicants shall include under Part IV (Program Narrative) of the form:

(1) A list of all organizations which will participate in the planning, implementation, or operation of each project, along with a discussion of the role of each organization;

(2) A full discussion of the desirability and feasibility of the project and a summary of the benefits to be derived;

(3) A summary of each proposed use of the intermodal passenger terminal for a civic or cultural activity;

(4) A description and documentation of existing or potential markets for interline intermodal service making use of the project facility, and of any changes in existing services which must be provided to achieve this potential;

(5) The proposed period during which the project will be evaluated to determine whether it has achieved the goals set forth in § 256.13(b);

(6) A detailed description of the rail passenger terminal (including where applicable the description on file with the National Register), the available transportation facilities, and the proposed intermodal passenger transportation improvements;

(7) Evidence that the architectural integrity of the railroad passenger terminal will be preserved;

(8) A detailed estimate of the total allowable project costs, listing and identifying each cost to the maximum possible extent;

(9) Evidence of the applicant's ability and intent to furnish its share of the total allowable costs;

(10) Evidence that the applicant has established, in accordance with Attachment G of Office of Management and Budget Circular A–102, adequate procedures for financial control, accounting, and performance evaluation, in order to assure proper use of the Federal funds;

(11) An assurance by the applicant that it will use Federal funds provided under the Act solely for the purpose for which assistance is sought and in conformance with the limitations on the expenditures allowed under the Act and applicable regulations;

(12) A description of the proposed methods of monitoring and evaluating the demonstration;

(13) Copies of the following: Preliminary architectual and engineering design documents, plans, sections, sketches, and outline specifications;

(14) A proposed draft of an environmental impact statement, including documentation that the project includes all possible planning to minimize harm to the historic nature of the facility as required by section 4(f) of

the Act (49 U.S.C. 1653(f)), to be reviewed, analyzed and used by the Administrator in preparation of a final Environmental Impact Statement under Department of Transportation Order 5610.IB (39 FR 35234, September 30, 1974);

(15) Two copies of an affirmative action program prepared in accordance with section 905 of the 4R Act (45 U.S.C. 803) and 49 CFR part 265;

(16) Assurances that the applicant will comply with the following Federal laws, policies, regulations and pertinent directives:

(i) Title VI of the Civil Rights Act of 1964 42 U.S.C. 2000d *et seq.*, and 49 CFR part 21;

(ii) Section 905 of the 4R Act (45 U.S.C. 803), and 49 CFR part 265;

(iii) Executive Order 11246, as amended (30 FR 12319, 32 FR 14303) and 41 CFR 60–4, as amended (43 FR 14888, Apr. 7, 1978) which require equal employment opportunity in federally-assisted construction programs.

(iv) Titles II and III of the Uniform Relocation Assistance and Real Property Acquisition Policies Act of 1970, 42 U.S.C. 4601 *et seq.*, and 49 CFR part 25;

(v) 42 U.S.C. 4151 *et seq.*, with regard to Federal policies ensuring that physically handicapped persons will have ready access to, and use of, public buildings;

(vi) The Rehabilitation Act of 1973, 29 U.S.C. 794, with regard to nondiscrimination under Federal grants;

(vii) The Hatch Act, 5 U.S.C. 1501 *et seq.*, which limits the political activities of employees; and

(viii) Where applicable, the State and Local Fiscal Assistance Act of 1972, 31 U.S.C. 1221 *et seq.*, and 31 CFR part 51.

(17) Evidence of all legal commitments including, but not limited to, operating agreements and right-of-way leases which have been obtained from private carriers, public transportation operating agencies, and other entities as appropriate, to assure continued operation of the transportation services during the evaluation period;

(18) Evidence (including, but not limited to, copies of leases, deeds, easements, certificates of title, and mortgage agreements) that the applicant's property interest in the railroad passenger terminal is or will be, at the commencement of the project, sufficient for the applicant to implement the project;

(19) A summary of each proposed agreement permitting the use of any portion of the imtermodal passenger terminal for commercial purposes other than the provision of transportation services (if a standard form contract is to be used, applicant may submit a copy of the standard contract, a list of parties with whom it has contracted, and a list of any terms not common to the standard contract);

(20) An opinion of the applicant's legal counsel advising that (i) counsel is familiar with (A) the applicant's corporate or other organization powers; (B) section 4(i) of the Act, as amended (49 U.S.C. 1653(i)); (C) the other Acts referred to in these regulations; and (D) any regulations issued to implement those Acts; (ii) the applicant is authorized to make the application including all certifications, assurances, and affirmations required; (iii) the applicant has the requisite authority to carry out the actions proposed in the application and to fulfill the obligations created thereby, including the obligation to pay a share of the costs of the proposed project; (iv) the applicant has the authority to enter into all of the legal commitments referred to in paragraph (c)(16) of this section and that these commitments are legal and binding by their terms; and (v) the applicant's property interest in the railroad passenger terminal is sufficient for the applicant to implement the project;

(21) For projects located in urbanized areas, as defined by the Bureau of the Census, a statement that the application has been coordinated with the metropolitan planning organization, designated by the Governor of the State in which the project is located pursuant to 23 U.S.C. 104(f)(3);

(22) A certification by the applicant that, in accordance with Office of Management and Budget Circular A–95 (41 FR 2052, Jan. 13, 1976), section 204 of the Demonstration Cities and Metropolitan Development Act of 1966 (42 U.S.C. 3334), and section 401 of the Intergovernmental Cooperation Act of 1968 (42 U.S.C. 4231), notification of the project has been submitted to, and comments thereon have been solicited from, the

appropriate State and regional agencies and clearinghouses; and

(23) Any other information that the Administrator may require.

(d) *Applications for preservation funds.* Each application for preservation assistance shall include:

(1) The complete name and principal business address of the applicant;

(2) The complete name, title, and address of the person to whom correspondence regarding the application should be addressed;

(3) A list of all organizations which will participate in the planning, implementation, or operation of each project, and a discussion of each organization's role;

(4) A full discussion of the desirability and feasibility of the project and a summary of the benefits to be derived;

(5) A detailed description of the rail passenger terminal (including where applicable the description on file with the National Register), the available transportation facilities, and the proposed intermodal passenger transportation improvements;

(6) Documentation of the threat to the existing terminal, involving demolition, dismantling, or further deterioration of the terminal and the causes thereof;

(7) Evidence that the planning for conversion or reuse of the terminal has commenced and that it is proceeding in a timely manner, including a copy of the projected planning schedule;

(8) A proposed draft of an environmental impact statement or a negative declaration, including documentation that the project includes all possible planning to minimize harm to the historic nature of the facility as required by section 4(f) of the Act, 49 U.S.C. 1653(f), to be reviewed, analyzed, and used by the Administrator in preparation of a final Environmental Impact Statement or Negative Declaration as required by Department of Transportation Order 5610.1B (39 FR 35234, Sept. 30, 1974);

(9) A detailed estimate of the total allowable project costs, listing and identifying all anticipated preservation costs to the maximum extent possible;

(10) The total amount of Federal assistance requested;

(11) Evidence of the applicant's ability and intent to furnish its share of the total allowable project costs;

(12) Where the applicant contemplates using funds which it has received or will receive from other Federal programs for the planning or demonstration stage of the project, a brief description of the sources, use and total anticipated amount of such funds;

(13) Evidence that the applicant has established in accordance with Attachment G of Office of Management and Budget Circular A–102, adequate procedures for financial control, accounting, and performance evaluation in order to assure proper use of the Federal funds;

(14) An assurance by the applicant that it will use Federal funds provided under the Act solely for the purpose for which assistance is sought and in conformance with the limitations on the expenditures allowed under the Act and applicable regulations;

(15) Evidence of substantial local public and/or private interest in organizing a project to convert the existing railroad passenger terminal to an intermodal passenger terminal, which may include use for civic or cultural activities;

(16) An opinion of the applicant's legal counsel stating that:

(i) Counsel is familiar with (A) the applicant's corporate or other organizational powers; (B) section 4(i) of the Act, as amended (49 U.S.C. 1653(i)), (C) the other Acts referred to in these regulations; (D) and any regulation issued to implement those Acts;

(ii) The applicant is authorized to make this application including all certifications, assurances, and affirmations required;

(iii) The applicant has the requisite authority to carry out the actions proposed in its application and to fulfill the obligations created thereby, including the obligation to pay a share of the cost of the proposed project, and

(iv) The applicant is empowered, for an interim period pending the formulation of plans for the conversion of the existing railroad passenger terminal, to maintain the terminal building and prevent its demolition, dismantling, or further deterioration;

(17) For projects located in urbanized areas, as defined by the Bureau of the

Census, a statement that the application has been coordinated with the metropolitan planning organization, designated by the Governor of the State in which the project is located, pursuant to 23 U.S.C. 104(f)(3);

(18) A certification by the applicant that, in accordance with Office of Management and Budget Circular A–95 (41 FR 2052, Jan. 13, 1976), section 204 of the Demonstration Cities and Metropolitan Development Act of 1966 (42 U.S.C. 3334), and section 401 of the Intergovernmental Cooperation Act of 1968 (42 U.S.C. 4231), notification of the project has been submitted to, and comments thereon have been solicited from, the appropriate State and regional agencies and clearinghouses;

(19) Two copies of an affirmative action program prepared in accordance with section 905 of the 4R Act (45 U.S.C. 803) and 49 CFR part 265;

(20) Assurances that the applicant will comply with the following Federal laws, policies, regulations and pertinent directives:

(i) Title VI of the Civil Rights Act of 1964, 42 U.S.C. 2000d *et seq.*, and 49 CFR part 21;

(ii) Section 905 of the 4R Act (45 U.S.C. 803) and 49 CFR part 265;

(iii) Executive Order 11246, as amended (30 FR 12319, 32 FR 14303) and 41 CFR 60–4, as amended (43 FR 14888, Apr. 7, 1978), which requires equal employment opportunity in federally-assisted construction programs.

(iv) Titles II and III of the Uniform Relocation Assistance and Real Property Acquisition Policies Act of 1970, 42 U.S.C. 4601 *et seq.*, and 49 CFR part 25;

(v) 42 U.S.C. 4151 *et seq.*, with regard to Federal policies ensuring that physically handicapped persons will have ready access to, and use of, public buildings;

(vi) The Rehabilitation Act of 1973, 29 U.S.C. 794, with regard to nondiscrimination under Federal grants;

(vii) The Hatch Act, 5 U.S.C. 1501 *et seq.*, which limits the political activities of employees; and

(viii) Where applicable, the State and Local Fiscal Assistance Act of 1972, 31 U.S.C. 1221 *et seq.*, and 31 CFR part 51; and

(21) Any other information that the Administrator may require.

(e) *Applications for planning funds.* Each application for planning assistance shall include:

(1) The complete name and principal business address of the applicant;

(2) The name, title, and address of the person to whom correspondence regarding the application should be addressed;

(3) A list of all organizations which will participate in the planning, implementation, or operation of each project, and a discussion of each organization's role;

(4) A preliminary statement of work, and a detailed estimate of all planning costs broken down by project task;

(5) A proposed schedule for the planning process;

(6) A full discussion of the desirability and feasibility of the project and a summary of the benefits to be derived;

(7) A detailed description of the rail passenger terminal (including, where applicable, the description on file with the National Register), the available transportation facilities, and the proposed intermodal passenger transportation improvements;

(8) The total amount of Federal assistance requested;

(9) Evidence of the applicant's ability and intent to furnish its share of the total allowable project costs;

(10) Where the applicant contemplates using funds which it has received or will receive from other Federal programs for the preservation or demonstration stages of the project, a brief description of the sources, use, and anticipated amount of such funds;

(11) Evidence that the applicant has established, in accordance with Attachment G of Office of Management and Budget Circular A–102, adequate procedures for financial control, accounting, and performance evaluation, in order to assure proper use of the Federal funds;

(12) An assurance by the applicant that it will use Federal funds provided under the Act solely for the purpose for which assistance is sought and in conformance with the limitations on the expenditures allowed under the Act and applicable regulations;

(13) An opinion of the applicant's legal counsel stating that:

(i) Counsel is familiar with (A) the applicant's corporate or other organization powers; (B) section 4(i) of the Act, as amended, 49 U.S.C. 1653(i); (C) the other Acts referred to in these regulations; and (D) any regulations issued to implement those Acts;

(ii) The applicant is authorized to make this application including all certifications, assurances, and affirmations required; and

(iii) The applicant has the requisite authority to carry out the actions proposed in its applications and to fulfill the obligations created thereby, including the obligation to pay a share of the costs of the proposed project;

(14) A proposed schedule for the implementation of the applicant's completed designs and plans;

(15) For projects located in urbanized areas, as defined by the Bureau of the Census, a statement that the application has been coordinated with the metropolitan planning organization, designated by the Governor of the State in which the project is located, pursuant to 23 U.S.C. 104(f)(3);

(16) A certification by the applicant that, in accordance with Office of Management and Budget Circular A–95 (41 FR 2052, Jan. 13, 1976), section 204 of the Demonstration Cities and Metropolitan Development Act of 1966 (42 U.S.C. 3334), and section 401 of the Intergovernmental Cooperation Act of 1968 (42 U.S.C. 4231), notification of the project has been submitted to, and comments thereon have been solicited from, the appropriate State and regional agencies and clearinghouses;

(17) Two copies of an affirmative action program prepared in accordance with section 905 of the 4R Act (45 U.S.C. 803) and 49 CFR part 265;

(18) Assurances that the applicant will comply with the following Federal laws, policies, regulations, and pertinent directives:

(i) Title VI of the Civil Rights Act of 1964, 42 U.S.C. 2000d et seq. and 49 CFR part 21;

(ii) Section 905 of the 4R Act (45 U.S.C. 803) and 49 CFR part 265;

(iii) Title II and title III of the Uniform Relocation Assistance and Real Property Acquisition Policies Act of 1970, 42 U.S.C. 4601 *et seq.* and 49 CFR part 25;

(iv) 42 U.S.C. 4151 *et seq.*, with regard to Federal policies ensuring that physically handicapped persons will have ready access to, and use of, public buildings;

(v) The Rehabilitation Act of 1973, 29 U.S.C. 794, with regard to nondiscrimination under Federal grants;

(vi) The Hatch Act, 5 U.S.C. 1501, *et seq.*, which limits the political activities of employees; and

(vii) Where applicable, the State and Local Fiscal Assistance Act of 1972, 31 U.S.C. 1221 *et seq.*, and 31 CFR part 51;

(19) A statement that the applicant is prepared to develop practicable plans meeting the zoning, land use, and other requirements of the applicable State and local jurisdictions in which the rail passenger terminal is located.

(20) An assurance by the applicant that the designs and plans for the conversion to an intermodal passenger terminal, including any use for civic or cultural activities, will be completed within two years following the approval of the application for Federal financial assistance;

(21) A description of how the applicant can incorporate features which appear reasonably likely to attract private investors willing to share in the implementation of the planned conversion and its subsequent maintenance and operation;

(22) An environmental assessment using an interdisciplinary approach in identifying the type, degree, effect, and probability of occurrence of potential environmental impacts due to the conversion to an intermodal passenger terminal; and

(23) Any other information that the Administrator may require.

(f) *Execution and filing of applications.* (1) The original application shall bear the date of execution and be signed by the Chief Executive Officer of the applicant or by the applicant, where the applicant is an individual. Each person required to execute an application shall execute a certificate in the form of appendix A hereto.

(2) The original application and two (2) copies shall be filed with the Federal Railroad Administrator, Department of Transportation, 400 7th Street SW., Washington, DC 20590. Each copy shall show the dates and signatures

that appear in the original and shall be complete in itself.

(3) Pre-applications for demonstration funds must be submitted to the Administrator no later than August 21, 1978. Applications for planning, preservation and demonstration funds must be submitted to the Administrator no later than September 19, 1978. Applications received after these deadlines will not be considered for funding, unless all funds are not granted to applicants who have met the application deadline.

[43 FR 21887, May 22, 1978]

§256.13 Review and approval of applications.

(a) *Pre-applications.* Pre-applications for demonstration funds shall be reviewed by the Administrator in consultation with the Chairman and the Council.

(b) *Applications.* The Administrator shall review applications in consultation with the Chairman and the Council and select and monitor projects most likely to accomplish the following goals:

(1) Demonstrate the capabilities of intermodal terminals to provide a more effective means of passenger interchange between various modes of transportation;

(2) Demonstrate the advantages of joint use terminal facilities to carriers;

(3) Demonstrate a more comprehensive and effective network of energy efficient surface common carrier transportation services through improving coordinated interline intermodal exchange at selected intermodal passenger terminals distinguished by coordinated information systems, schedules, and through ticketing and baggage handling;

(4) Evaluate user response to such coordinated interline intermodal transportation services, and to joint carrier use of terminal facilities;

(5) Demonstrate the potential of underutilized railroad passenger terminals of historical and architectural distinction for improving intermodal passenger transportation services and for providing an appropriate focal point for civic and cultural activities;

(6) Stimulate local public and private investment, by transportation carriers and others, in improved intercity and local public transportation facilities and services;

(7) Encourage the preservation of railroad passenger terminals pending the formulation of plans for reuse; and

(8) Encourage the development of plans for the conversion of railroad passenger terminals into intermodal passenger terminals, which may incorporate civic and cultural activities where feasible.

(c) *Preferential consideration.* In reviewing applications for planning funds, the Administrator shall give preferential consideration to applicants whose completed designs and plans will be implemented and effectuated within three years after the date of completion.

(d) *Approval within 90 days.* The Administrator will approve or deny each application within 90 days of the submission dates set forth in §256.11(f)(3) and the Administrator will promptly notify in writing each applicant whose application has been approved.

[40 FR 29080, July 10, 1975, as amended at 43 FR 21890, May 22, 1978; 44 FR 21647, Apr. 11, 1979]

§256.15 Disbursement of financial assistance.

(a) *Grant agreement.* After receipt, review, and approval of an application, the Administrator will enter into a grant agreement with an applicant for the Federal share of the total allowable project costs. The terms and conditions of payment of the Federal share shall be set forth in the grant agreement.

(b) *Record retention.* Each recipient of financial assistance under this part shall keep such records as the Administrator shall prescribe, including records which fully disclose the amount and disposition by such recipient of the proceeds of such assistance, the total cost of the project or undertaking in connection with which such assistance was given or used, the amount of that portion of the cost of the project or undertaking supplied by other sources, and such other records as will facilitate an effective audit.

(c) *Audit and examination.* Until the expiration of three years after the completion of the project or undertaking

referred to in paragraph (b) of this section, the Administrator and the Comptroller General of the United States, or any of their duly authorized representatives, shall have access for the purpose of aduit and examination to any books, documents, papers, and records of such receipts which, in the opinion of the Administrator or the Comptroller General, may be related or pertinent to such financial assistance.

[40 FR 29080, July 10, 1975, as amended at 43 FR 21890, May 22, 1978]

APPENDIX A TO PART 256—CERTIFICATE

The following is the form of the certificate to be executed by each person signing a pre-application or application:

_____ (Name of Person) certifies that he is the Chief Executive Officer of _____ (Name of Agency or Organization); that he is authorized to sign and file with the Federal Railroad Administrator this (pre-application or application); that he has carefully examined all of the statements contained in the (pre-application or application) relating to _____; that he has knowledge of the matters set forth therein and that all statements made and matters set forth therein are true and correct to the best of his knowledge, information and belief.

[43 FR 21890, May 22, 1978]

PART 260—REGULATIONS GOVERNING SECTION 511 OF THE RAILROAD REVITALIZATION AND REGULATORY REFORM ACT OF 1976, AS AMENDED

Subpart A—Procedures for Application for Commitment to Guarantee or Guarantee of Obligations

Sec.
260.1 Applicability.
260.3 Definitions.
260.5 Eligibility.
260.7 Form and content of application.
260.9 Required exhibits.
260.11 Preapplication and application procedure.
260.13 Information requests.
260.15 Waivers and modifications.

APPENDIX TO SUBPART A—ENVIRONMENTAL ASSESSMENTS

Subpart B—Standards for Maintenance of Facilities by Recipients of Obligation Guarantees

260.17 Applicability.
260.19 Definitions.
260.21 Standards.
260.23 Inspection and reporting.
260.25 Waiver.
260.27 Impact on other laws.
260.29 Penalties.

Subpart C—Procedures for Computing the Internal Rate of Return on Projects

260.31 Applicability.
260.33 Definitions.
260.35 Procedures to be followed and format to be utilized.

APPENDIX A TO PART 260—SELECTED CASH FLOW IMPACTS
APPENDIX B TO PART 260—FORMS TO BE USED IN COMPUTING IRR
FORM I—ANALYSIS OF CAPITALIZED INVESTMENT
FORM II—ANALYSIS OF SALE OR RETIREMENT OF ASSETS
FORM III—ANALYSIS OF EXPENSES AND CONTRIBUTION TO PROFIT
FORM IV—CONSOLIDATION OF CASH FLOWS
FORM V—COMPUTATION OF IRR

AUTHORITY: Railroad Revitalization and Regulatory Reform Act of 1976, Pub. L. 94–210, 90 Stat. 76, as amended by the Rail Transportation Improvement Act, Pub. L. 94–555, 90 Stat. 2625; the Department of Transportation Act, 49 U.S.C. 1651 et seq., regulations of the Office of the Secretary of Transportation, 49 CFR 1.49(u).

SOURCE: 43 FR 14870, Apr. 7, 1978, unless otherwise noted.

Subpart A—Procedures for Application for Commitment to Guarantee or Guarantee of Obligations

§ 260.1 Applicability.

This subpart prescribes the procedures governing applications for a commitment to guarantee or a guarantee of the payment of the principal balance of, and any interest on, an obligation of an applicant under section 511 of the Railroad Revitalization and Regulatory Reform Act of 1976, as amended (''Act''). Applications for a commitment to guarantee or a guarantee of obligations of the Consolidated Rail Corporation for electrification of high-

density mainline routes must be filed in accordance with these procedures, as provided in section 211(i) of the Regional Rail Reorganization Act of 1973, as amended (45 U.S.C. 721(i)). These procedures also govern applications for a commitment to guarantee or guarantee of obligations incurred for the purpose set forth in section 517 of the Act, improvement of intercity rail passenger service on lines of the applicant located outside the Northeast Corridor, being the properties acquired by the National Railroad Passenger Corporation pursuant to title VII of the Act and described in section 701(a)(4) of the Act.

§ 260.3 Definitions.

As used in this part—

(a) *Act* means the Railroad Revitalization and Regulatory Reform Act of 1976 (Pub. L. 94–210, February 5, 1976), as amended.

(b) *Administrator* means the Federal Railroad Administrator, or his delegate.

(c) *Applicant* means any railroad, or other person (including a governmental entity) that submits an application to the Administrator for the guarantee of an obligation under which it is an obligor or for a commitment to guarantee such an obligation.

(d) *Commission* means the Interstate Commerce Commission.

(e) *Equipment* means any type of new or rebuilt standard gauge locomotive, caboose, or general service railroad freight car the use of which is not limited to any specialized purpose by particular equipment, design, or other features, or any other type of car designated by the Administrator upon a written finding that such designation is consistent with the purposes of the Act. General service railroad freight car includes a boxcar, gondola, opentop or covered hopper car, and flatcar.

(f) *Facilities* means—

(1) Track, roadbed, and related structures, including rail, ties, ballast, other track materials, grading, tunnels, bridges, trestles, culverts, elevated structures, stations, office buildings used for operating purposes only, repair shops, enginehouses, and public improvements used or usable for rail service operations;

(2) Communications and power transmission systems, including electronic, microwave, wireless, communication, and automatic data processing systems, electrical transmission systems, powerplants, power transmission systems, powerplant machinery and equipment, structures, and facilities for the transmission of electricity for use by railroads;

(3) Signals, including signals and interlockers;

(4) Terminal or yard facilities, including trailer-on-flat-car and container-on-flatcar terminals, express or railroad terminal and switching facilities, and services to express companies and railroads and their shippers, including ferries, tugs, carfloats, and related shoreside facilities designed for the transportation of equipment by water; or

(5) Shop or repair facilities or any other property used or capable of being used in rail freight transportation services or in connection with such services or for originating, terminating, improving, and expediting the movement of equipment.

(g) *FRA* means Federal Railroad Administration.

(h) *Guarantee* means guarantee or commitment to guarantee unless the context in which it is used indicates otherwise.

(i) *Including* means including but not limited to.

(j) *Holder* means the obligee or creditor under an obligation, except that when a bank or trust company is acting as agent or trustee for such an obligee or creditor pursuant to an agreement to which the obligor is a part, the term refers to such bank or trust company.

(k) *Obligation* means a bond, note, conditional sale agreement, equipment trust certificate, security agreement, or other obligation issued or granted to finance or refinance equipment or facilities acquisition, construction, rehabilitation or improvement.

(l) *Obligor* means the debtor under an obligation, including the original obligor and any successor or assignee of such obligor who is approved by the Administrator.

(m) *Project* means the use of the proceeds of the obligation for which a

guarantee or guarantee commitment is sought.

(n) *Railroad* means a common carrier by railroad or express as defined in section 1(3) of Part I of the Interstate Commerce Act (49 U.S.C. 1(3)), including the National Railroad Passenger Corporation and the Alaska Railroad.

(o) *Trustee* means the trustee, or trustees if more than one trustee has been appointed, of an applicant in bankruptcy.

§ 260.5 Eligibility.

Under section 511 the Administrator may guarantee and make commitments to guarantee the payment of the principal balance of, and any interest on, an obligation of any applicant prior to, on, or after the date of execution or the date of disbursement of such obligation, if the proceeds of such obligation shall be or have been used to acquire or to rehabilitate and improve facilities or equipment, or to develop or establish new railroad facilities.

§ 260.7 Form and content of application.

(a) Each application shall include, in the order indicated and identified by applicable section numbers and letters corresponding to those used in this part, the following information:

(1) Full and correct name and principal business address of the applicant;

(2) Date of applicant's incorporation, or organization if not a corporation, and name of the government, state or territory under the laws of which it was incorporated or organized. If applicant is a trustee then, in addition, the name and address of the reorganization court under the direction of which applicant is acting, and the docket number of the proceeding. If applicant is a partnership, association, or other form of organization other than a corporation, a full description of the organization should be furnished;

(3) Name, title, and address of the person to whom correspondence regarding the application should be addressed;

(4) Certified copy of proposed or executed obligation agreement, including and related agreements of other documents, and detailed description of the obligation, and of the series or issue of which the obligation is a part, including—

(i) Total amount of the obligation;

(ii) Detailed description of the project and its purpose or purposes, including—

(A) A description of all facilities or equipment and the physical condition of such facilities or equipment included in or directly affected by the proposed project and a description of the project;

(B) Each part or sub-part into which the project may reasonably be divided, the priority and schedule of expenditure for each part or sub-part:

(C) Estimated timing of the expenditure of the proceeds of the obligation; and

(D) Statement of whether the project involves another railroad or other participant, through joint execution, coordination, or otherwise; if so, description of the relative participation of applicant and such other railroad or participant, including statement or financing arrangements of each participant, portion of the work to be performed by each participant, and contemplated level of usage of the equipment or facility of each participant when the work is completed, along with a statement by a responsible officer or official of the other railroad or participant that the information provided reflects their agreement on these matters;

(iii) Effective date;

(iv) Schedule for repayment of principal;

(v) Description of the security to be offered the Administrator in connection with any guarantee, applicant's opinion of the value of this security and the basis for such opinion; in the case of leased equipment to be rehabilitated or improved with the proceeds of the obligation proposed to be guaranteed, applicant shall state, in addition to the above, whether the lease provides for, or the lessor will permit, encumbrance of the leasehold or subordination of the lessor's interest in the equipment to the Administrator.

(vi) Where the obligation for which a guarantee is sought is outstanding, actual effective rate of interest; or where

the applicant has discussed with a potential holder the terms of an obligation to be issued, the proposed effective rate of interest;

(5) Statement, in summary form, showing financial obligations to or claims against the United States or obligations for which the United States is guarantor, if any, by applicant or any affiliated corporate entity of the applicant or the applicant's parent as of the date of the application, including:

(i) Status of any claims under litigation; and

(ii) Any other debits or credits existing between the applicant and the United States, showing the department or agency involved in such loans, claims and other debts;

(6) An analysis that includes:

(i) Statement, together with supporting evidence including copies of all market analyses and studies that have been performed to determine present and future demand for rail services, that the financing is justified by present and future demand for rail services, will meet existing needs for such services, and will provide shippers with improved service;

(ii) Description of the impact of the financing upon the projected traffic to be originated, terminated, or carried by the obligor for at least the five years immediately following completion of the project; and

(iii) Description of any other benefit which would accrue to the applicant from the proceeds of the obligation;

(7) Statement, together with supporting evidence, that the facilities or equipment being acquired, rehabilitated or improved will be efficiently and economically utilized, including:

(i) A detailed statement setting forth the estimated internal rate of return on the project, computed in accordance with the provisions of subpart C of this part. This statement shall follow the procedures and follow the format required by subpart C. Relevant material presented elsewhere in the application need not be repeated in this statement, but must be explicitly referenced. If the project can be divided into parts such that each part:

(A) Accounts for a significant portion of the total investment for which Federal assistance is sought; and

(B) Produces approximately the same cash flow impacts regardless of whether the remainder of the project is undertaken; then the applicant must submit a separate internal rate of return computation, with the supporting documentation described in subpart C of this part, for each part of the project. In that case, all references to the term ''project'' in subpart C of this part shall be deemed to refer to the part of the project for which the rate of return is being computed;

(ii) Explanation of the manner in which the project will increase the economical and efficient utilization of equipment and facilities; and

(iii) Documentation of any other improvements in service as a result of the project, including service reliability between origin and destination point pairs and reduction in time from load to load car cycle by car type;

(iv) A description of the project's effect on national energy consumption (over the life of the project and in light of the information provided in response to §260.6) by the applicant and other parties (as applicable) with particular emphasis on increases and decreases in national use of petroleum, natural gas, and coal.

(8) Statement, together with supporting evidence, that the transaction will improve the ability of any affected railroad to transport passengers or freight;

(9) Statement of applicant's maintenance program for its entire rail system and planned maintenance program for the equipment or facilities financed by the proceeds of the obligation;

(10) Certified statement that applicant will pay to the Administrator in accordance with §260.11(b)(4) an initial investigation charge and any additional investigation charges the Administrator assesses with respect to analysis and evaluation of the application, appraisal of any security offered by an applicant, and all studies and investigations that the Administrator deems necessary in order to make determinations or findings prescribed in the Act, up to a maximum of one-half of one percent of the obligation for which a guarantee is sought.

(11) With respect to each existing holder or proposed prospective holder, a statement as to:

(i) Full and correct name and principal business address;

(ii) Reference to applicable provisions of law and the charter or other governing instruments conferring authority on the holder to accept the obligation;

(iii) Brief statement of the circumstances and negotiations leading to the agreement by the holder to take the proposed obligation;

(iv) Brief statement of the nature and extent of any affiliation or business relationship between the existing or prospective holder and any of its directors, partners, or principal executive officers, on the one hand, and, on the other, the applicant and any of its directors, partners, or principal executive officers, or any person or persons whose name is required to be furnished under paragraph (a)(11)(v) of this section; and

(v) Full and complete statement of all sums to be given by the holder in connection with the proposed obligation including:

(A) Name and address of each person to whom the payment has been made or will be made and nature of any affiliation, association, or prior business relationship between any person named in this paragraph and the holder or any of its directors, partners, or officers;

(B) Amount of the cash payment, or the nature and value of other consideration; and

(C) Any condition upon the obligation of the obligee to make such payment;

(12) Detailed assessment of impact of the project on the environment, in the general format and including the information set forth in the appendix to subpart A of this part;

(13) Statement that notice of the application, including a brief description of the project, has been posted on bulletin boards convenient to interested employees of the railroad and by sending registered mail notice to the duly authorized representatives of such employees. This requirement is not in lieu of any other requirement imposed by reason of section 516 of the Act;

(14) Any information that the applicant deems appropriate to convey a full and complete understanding of the project and its impact or to assist the Administrator in making the statutorily prescribed findings; and

(15) Any other information which the Administrator may deem necessary concerning an application filed under this part.

(b) When applicant is a trustee, the application shall provide all of the information required in paragraph (a) of this section, and in addition shall provide a full and complete statement, together with supporting evidence, demonstrating that applicant can reasonably be expected to become self-sustaining within a reasonable period of time.

[43 FR 14870, Apr. 7, 1978, as amended at 45 FR 58038, Aug. 29, 1980]

§ 260.9 Required exhibits.

There shall be filed with and made a part of each application and copy thereof the following exhibits, except that exhibits filed with the Administrator pursuant to some other statutory provision or regulation which are in the same format as the following exhibits may be incorporated in and made part of the application filed under this part by reference. While the application is pending, when actual data become available in place of the estimated or forecasted data required in the exhibits under this part, such actual data must be reported promptly to the Administrator in the form required in the appropriate exhibit. All forecasted data required in the exhibits under this part must be based on the assumption that the project will be funded on the January 1 next following the date of the application.

(a) *Exhibit A.* Map of applicant's existing railroad with location of project indicated, if appropriate.

(b) *Exhibit B.* Statement showing to the latest available date but in any event to a date no less recent than the end of the 3d month preceding the date of filing of the application:

(1) Maximum number of locomotive units out of service during each quarter due to business conditions; maximum number of such units out of service during each quarter due to mechanical defects; and ratio of each to total ownership quarterly for each of the last 3 calendar years but not earlier than the quarter ending June 1974, and the current calendar year; and

(2) Maximum number of general service freight cars out of service during each quarter due to business conditions; maximum number of such cars out of service during each quarter due to mechanical defects; and ratio of each to total number of general service freight cars owned by applicant quarterly for each of the last 3 calendar years but not earlier than the quarter ending June 1974, and the current calendar year.

(c) *Exhibit C.* A copy of applicant's most recent year-end general balance sheet certified by applicant's independent public accountants, if available, and a copy of applicant's most recent unaudited general balance sheet as of a date no less recent than the end of the third month preceding the date of filing of the application. The unaudited balance sheet shall be presented in account form and detail as required in Schedule 200 of the Commission's Annual Report R–1 or R–2, as appropriate, together with the following schedules (where changes in accounts from the end of the prior year to date of the application have not been significant, copies of the appropriate schedules in the prior year's R–1 or R–2 with marginal notations listing the changes may be submitted:

(1) Particulars of Account 704, Loans and Notes Receivable, in form and detail as required in Schedule 201 of Annual Report R–1 for the Class I railroads, and in similar form for the Class II railroads except that for Class II railroads loans and notes receivable that are each less than $25,000 may be combined into a single amount;

(2) Particulars of investments in affiliated companies and other investments in form and detail required in Schedules 205 and 206 of Annual Report R–1, or schedules 1001 and 1002 of Annual Report R–2, as appropriate;

(3) Particulars of balances in Accounts 741, Other Assests, and 743, Other Deferred Charges, in form and detail required in Schedule 216 of Annual Report R–1 or Schedule 1703 of Annual Report R–2, as appropriate;

(4) Particulars of loans and notes payable in form and detail required in Schedule 223 of Annual Report R–1, or Schedule 1701 of Annual Report R–2, as appropriate, as well as information as to bank loans, including the name of the bank, date and amount of the original loan, current balance, maturities, rate of interest, and security, if any;

(5) Particulars of long-term debt in form and detail required in Schedules 218 and 219 of Annual Report R–1 or Schedules 670, 695, 901, 902 and 1702 of Annual Report R–2, as appropriate, together with a brief statement concerning each mortgage, pledge, and other lien, indicating the property or securities encumbered, the mortgage limit per mile, if any, and particulars as to priority;

(6) Particulars of balance in account 784, Other Deferred Credits, in form and detail required in Schedule 225 of Annual Report R–1 or Schedule 1704 of Annual Report R–2, as appropriate; and

(7) Particulars as to capital stock in form and detail required in Schedules 228, 229, and 230 of Annual Report R–1 or Schedule 690 in Annual Report R–2, as appropriate.

(d) *Exhibit D.* Applicant's most recent annual income statement certified by applicant's independent public accountants if available, and a spread sheet showing unaudited monthly and year-to-date income statement data for the calendar year in which the application is filed in account form similar to that required in column (a) of Schedule 300 of Annual Report R–1 or R–2 as appropriate. For those months preceding and ending upon the date of the unaudited balance sheet presented in Exhibit C, the income statement data shall be reported on an actual basis and so noted. For those months between the dates of the unaudited balance sheet and the filing of the application, the income statement data shall be reported on an estimated basis and so noted and shall be submitted in conjunction with corresponding estimated month-end balance sheets. For those

months between the date of the application and the end of the year the income statement data shall be presented on a forecasted basis and so noted and shall be submitted in conjunction with a forecasted balance sheet as at the year end.

(e) *Exhibit E.* Spread sheets showing for each of the four years subsequent to the year in which the application is filed, both before and after giving effect to the proceeds of the assistance requested in the application:

(1) Forecasted annual income statement data in account form and detail similar to that required in column (a) of Schedule 300 of Annual Report R–1 or R–2 as appropriate, including the subaccounts comprising line 2 (railway operating expenses), as specified by lines 64, 92, 105, 159, 168, and 180 of Schedule 320; and

(2) Forecasted year-end balance sheets in account form and detail similar to that required in Schedule 200 of Annual Report R–1 or R–2, as appropriate.

These spread sheets shall be accompanied by a statement setting forth the bases for such forecasts.

(f) *Exhibit F.* A spread sheet showing changes in financial position for the year in which the application is filed in account form and detail as required in Schedule 309 of Annual Report R–1 or R–2 as appropriate as follows:

(1) For that period ending on the date of the unaudited balance sheet in Exhibit C, based upon actual data; and

(2) For that period from the balance sheet date to the end of the year, based upon estimated and forecasted data.

(g) *Exhibit G.* A spread sheet showing forecasted changes in financial position for each of the four calendar years subsequent to the year in which the application is filed, both before and after giving effect to any funds requested in the application and including a statement showing the bases for such estimates, in account form and detail as required in Schedule 309 of the Annual Report R–1 for Class I railroads and in similar form and detail for Class II railroads.

(h) *Exhibit H.* With respect to equipment proposed to be rehabilitated, improved, maintained, or acquired in the application, a statement indicating number of units and in-service or out-of-service status and, as appropriate:

(1) For locomotives, service type, age, size, horsepower, name of builder, description of work, and unit cost of proposed work; and

(2) For freight cars or intermodal equipment, information as to service type (box, gondola, flat, etc.), age, capacity, description of work, and unit costs of proposed work.

Such statement shall show the total cost of the project, types and quantities of work items, unit cost of each item, and distribution of such cost by primary accounts of the Commission's Uniform System of Accounts separated where applicable between material, labor, and other; the ownership of all equipment which is the subject of the project; and the dates on which work is to be commenced or completed. Direct labor, supervision, material costs, contingencies, and any applicable overhead expenses that are included in the total cost of the project should be shown separately and identified.

(i) *Exhibit I.* With respect to the maintenance, rehabilitation, improvement, acquisition, or construction of facilities proposed in the application, a statement showing, as appropriate:

(1) Track Class, as defined by the FRA Track Safety Standards in part 213 of this chapter, and maximum allowable speed under which each line on which maintenance, rehabilitation, improvement, acquisition or construction is proposed has been and is being operated and the reasons therefor, the track class, maximum allowable speed, and signal requirements necessary in the judgment of the railroad to provide safe, reliable and competitive rail services over such lines, and the highest track class and maximum allowable speed at which each such line will be designated when the proposed project is completed;

(2) Dates on which project is proposed to be commenced and completed; and dates on which any part of sub-part into which the project may reasonably be divided is proposed to be commenced and completed;

(3) Types and quantities of work items, unit cost of each item, cost of project in total and by parts or sub-parts into which the project may be

reasonably divided, and distribution of such costs by primary accounts of the Commission's Uniform System of Accounts, separated where applicable between material, labor and other. Direct labor, supervision, material costs, contingencies, and any applicable overhead expenses that are included in the costs of the project should be shown separately and identified.

(j) *Exhibit J.* A draft notice of filing, to be published by the Administrator in the FEDERAL REGISTER, which shall contain a brief summary of the project(s) proposed to be funded, including as applicable:

(1) The name and address of applicant;

(2) A brief description of the project(s) proposed to be funded, the total cost of such project(s), and the amount of Federal financial assistance sought;

(3) A brief description of the facilities or equipment to be acquired, rehabilitated or improved, including where appropriate, city or county and State location termini, and approximate distance in miles;

(4) The justification for the project(s); and

(5) A final paragraph which shall read as follows:

Interested persons may submit written comments on the application to the Associate Administrator for Federal Assistance, Federal Railroad Administration, 400 Seventh Street SW., Washington, DC 20590, not later than 30 days after the date on which this notice is published in the FEDERAL REGISTER. Such submission shall indicate the docket number shown on this notice and state whether the commenter supports or opposes the application and the reasons therefor.

The comments will be taken into consideration by the Federal Railroad Administration in evaluating the application. However, formal acknowledgment of the comments will not be provided.

NOTE: The account forms referred to in the exhibits are those of the Commission's Uniform System of Accounts for Railroad Companies in use on October 1, 1976. However, the information required in any of the exhibits shall give effect to any modification of the Commission's Uniform System of Accounts for Railroad Companies in effect on the date of filing the application.

§260.11 Preapplication and application procedure.

(a) When a railroad or any other person has developed plans for a project for which it may wish to seek assistance under this part, a responsible official of the railroad or other person may request a meeting with the Associate Administrator for Federal Assistance of the FRA to discuss those plans. Upon receipt of such request, the Associate Administrator will promptly schedule a meeting at which the railroad or other person will present to representatives of the FRA the proposed project and discuss with them information which must be submitted in the application and the type of terms and conditions and financing documents that will be utilized in connection with financial assistance provided under section 511. Applicants are not required to prepare a draft application or other special information for the preapplication conference; however, applicants should be prepared to discuss information which management has used in making its initial decision to seek assistance.

(b) The following procedure shall govern the execution and filing of the application:

(1) The original application shall bear the date of execution, be signed with ink by or on behalf of the applicant, and shall bear the corporate seal in the case of an applicant which is a corporation. Execution shall be by all partners if a partnership, unless satisfactory evidence is furnished of the authority of a partner to bind the partnership, or if a corporation, an association or other similar form of organization, by its president or other executive officer having knowledge of the matters therein set forth. Persons signing the application on behalf of the applicant shall also sign a certificate in form as follows:

_____ (Name of official) certifies that he is the _____ (Title of official) of the _____ (Name of applicant); that he is authorized on the part of the applicant to sign and file with the Administrator this application and exhibits attached thereto; that the consent of all parties whose consent is required, by law or by binding commitment of the applicant, in order to make this application has been given; that he has carefully examined all of the statements contained in

such application and the exhibits attached thereto and made a part thereof relating to the aforesaid _____ (Name of applicant); that he has knowledge of the matters set forth therein and that all such statements made and matters set forth therein are true and correct to the best of his knowledge, information, and belief.

(Name of official)

_____

(Date)

(2) There shall be made a part of the original application the following certificate by the Chief Financial Officer or equivalent officer of the applicant:

_____ (Name of officer) certifies that he is _____ (Title of officer) of _____ (Name of applicant); that he has supervision over the books of accounts and other financial records of the affected applicant and has control over the manner in which they are kept; that such accounts are maintained in good faith in accordance with the effective accounting and other orders of the Interstate Commerce Commission; that such accounts are adequate to assure that proceeds from the financing being requested will be used solely and specifically for the purposes authorized; that he has examined the financial statements and supporting schedules included in this application and to the best of his knowledge and belief those statements accurately reflect the accounts as stated in the books of account; and that, other than the matters set forth in the exceptions attached to such statements, those financial statements and supporting schedules represent a true and complete statement of the financial position of the applicant and that there are no undisclosed assets, liabilities, commitments to purchase property or securities, other commitments, litigation in the courts, contingent rental agreements, or other contingent transactions which might materially affect the financial position of the applicant.

(Name of official)

_____

_____

(Date)

(3) The original application and supporting papers, and ten copies thereof for the use of the Administrator, shall be filed with the Associate Administrator for Federal Assistance of the Federal Railroad Administration, 400 Seventh Street SW., Washington, DC 20590. Each copy shall bear the dates and signatures that appear in the original and shall be complete in itself, but the signatures in the copies may be stamped or typed.

(4) The application shall be accompanied by a filing fee in an amount equal to one-eighth of one percent of the principal amount of the obligation for which a guarantee is sought. This filing fee shall be applied towards the costs of analyzing and evaluating the application, appraising any security offered by applicant, and making any studies or investigations that the Administrator deems necessary in order to make the determinations and findings prescribed in the Act, except where the Administrator finds it necessary to retain contractors to perform or assist in performing these functions. Where any of these functions is performed under contract to the Administrator, the applicant will be charged, and shall pay promptly, an additional amount to cover the costs of such contract(s) but such charges will not exceed, when added to the initial charge, one-half of one percent of the obligation for which a guarantee is sought.

(5) The application shall be accompanied by a transmittal letter in form as follows:

Re Application for a Commitment to Guarantee [Guarantee] under section 511 of the Railroad Revitalization and Regulatory Reform Act of 1976, as amended (the ''Act'').

FEDERAL RAILROAD ADMINISTRATOR,
c/o the Associate Administrator for Federal Assistance of the Federal Railroad Administration, Department of Transportation, Washington, DC.

DEAR SIR: Being duly authorized by _____ (jointly and severally/if more than one) (the ''Applicant'') to convey the understandings hereinafter set forth, I respectfully submit this application and remit its filing fee. By this filing, Applicant requests the Administrator to investigate the application and make the necessary findings upon which Applicant's eligibility for a Commitment to Guarantee [Guarantee] may be determined.

Applicant understands that neither the acceptance of this filing, the deposit of the filing fee, nor the commencement of an investigation acknowledges the sufficiency of the application's form, content or merit. Furthermore, Applicant understands that the Administrator will incur numerous expenses by this filing, and promises to pay, when charged, such amounts as the Administrator may assess with respect to the investigation of the application, the appraisal of security being offered, and the making of the necessary determinations and findings, up to

one-half of one percent (including the filing fee) of the principal amount of the obligation for which Applicant seeks a Commitment to Guarantee [Guarantee].

Finally, Applicant understands that (1) payment of all such charges is required prior to the Administrator's final determination, (2) no charge will be cancelled nor refund made upon any termination of this application, (3) notice of this application will be published in the FEDERAL REGISTER to invite comment by interested parties, and (4) the Administrator will assess an annual premium charge, pursuant to the Act, on any obligation guaranteed under section 511.

Respectfully submitted,

_____

Applicant(s)

_____

Seal(s)

by _____

Its (Their)

§ 260.13 Information requests.

If an applicant desires that any information submitted in an application or supplement thereto not be released by the Administrator upon request from a member of the public, the applicant must so state and must set forth any reasons why such information should not be released, including particulars as to any competitive harm which would probably result from release of such information. The Administrator will keep such information confidential as permitted by law.

§ 260.15 Waivers and modifications.

The Administrator may, upon good cause shown, waive or modify any requirement of this part not required by law or make any additional requirements he deems necessary.

APPENDIX TO SUBPART A—ENVIRONMENTAL ASSESSMENTS

Part I. Description of the environment in the area of the project before commencement of such project, together with statement of other Federal activities in the area which are known, or should be known, to the applicant. This description shall include, without limitation, the following information:

(A) *Demographic data.* Statement of population and growth characteristics of area and of any population and growth assumptions made by applicant in planning the project. Such statement should use the rates of growth in the projection compiled for the Water Resources Council by the Bureau of Economic Analysis of the Department of Commerce and the Economic Research Service of the Department of Agriculture, commonly referred to as the OBERS projection of regional economic activity in the United States. Applicants should refer to 1972 OBERS projections for economic areas, and provide 1969 data and 1980 projections for the following: Population; manufacturing earnings; transportation, communications and public utilities earnings; agriculture, forestry and fisheries earnings; and mining earnings. Information should be provided for economic areas which the applicant's proposal would affect.

(B) *Current land use patterns.* Statement of the project's relationship to proposed land use plans, policies, and controls of affected communities, including, where appropriate, maps or diagrams. Where the project is inconsistent with any such plans, policies, or controls, the statement should describe and explain in detail the reasons for such inconsistency.

(C) *Characteristics of current operations.* The Applicant should indicate the maximum allowable speed and frequency of current rail traffic on any affected line, the number and location of grade crossings, and the length of time such grade crossings are blocked during a typical day. The Applicant should indicate derailments and fatalities or injuries resulting from accidents involving trains and motor vehicles or pedestrians on such lines. The Applicant should also indicate the hours of operation on such lines and noise levels of rail operations at 100′ from the right of way. Applicants should refer to the United States Environmental Protection Agency document titled ''Information on Levels of Noise Requisite to Protect Public Health and Welfare with an Adequate Margin of Safety'', which provides a system of measuring day and night noises on a weighted average.

(D) *Air quality.* The Applicant should indicate the air quality in the region, as found in the state Air Quality Implementation Plans to meet ambient air quality standards. Each state is required to prepare such a plan under the Clean Air Act (42 U.S.C. 1857). Some states are required to have Transportation Control Plans to meet ambient air quality standards where transportation sources pose major air quality problems. Applicants should refer to state air quality agencies or to the Regional Offices of the U.S. Environmental Protection Agency for guidance.

(E) *Wetland or coastal zones.* Location, types, and extent of wetland areas or coastal zones that might be affected by the project.

(F) *Properties and sites of historical or cultural significance.* Identification of districts, sites, buildings and other structures, and objects or historical, architectural, archeological, or cultural significance that may be affected by the project. This should be accomplished by consulting the National Register

and applying the National Register Criteria (36 CFR part 800) to determine which properties that may be affected by the project are included in or eligible for inclusion in the National Register of Historic Places. The National Register is published in its entirety each February in the FEDERAL REGISTER. Monthly additions and listings of eligible properties are published in the FEDERAL REGISTER the first Tuesday of each month. The Secretary of the Interior will advise, upon request, whether properties are eligible for the National Register. Officials designated by their Governors to act as State Historic Preservation Officers responsible for state activities under the National Historic Preservation Act may also be consulted. A listing of these state officials may be found at 36 CFR 60.5(d), or may be obtained from the Director, National Parks Service, U.S. Department of the Interior, Washington, DC 20240.

(G) *Publicly-owned parklands, recreational areas, and waterfowl refuges, and historic sites (45 U.S.C. 1653(f)).* (i) Protected land proposed to be used. Describe any publicly-owned land from a public park, recreation area or wildlife and waterfowl refuge or any land from an historic site or wildlife and waterfowl refuge or any land from an historic site which would be affected or taken by the proposed program or project, including the size of the land proposed to be affected or taken, available activites on the land, use, patronage, unique or irreplaceable qualities, relationship to other similarly used land in the vicinity of the proposed project, and maps, plans, slides, photographs, and drawings in sufficient scale and detail to clearly show proposed project. Include a description of impacts of the proposed project on the land and changes in vehicular or pedestrian access.

(ii) Significant area. Include a statement of the national, State, or local significance of the entire park, recreation area, wildlife or waterfowl refuge, or historic site as determined by the Federal, State or local officials having jurisdiction thereof. In the absence of such a statement, protected land is presumed to be located in an area of national, State or local significance.

Part II. The probable impact of the project on the environment and measures which can be taken to mitigate adverse impacts. The applicant shall (1) assess the positive and negative environmental effects, including primary, secondary, and other foreseeable effects, on each of the areas specified in Part I of this appendix, including long-term impacts associated with the increased intensity, if any, of rail operations, and (2) list measures which can be taken to mitigate adverse impacts. Mitigation measures include control of hours of operation, coordination of street blockages with adjacent communities, dust and erosion control measures, and proposed methods of tie disposal. In addition, the applicant shall provide the following.

(A) Statement of the extent to which any of the impacts of the project represent irreversible or irretrievable commitments of resources. This requires identification of the extent to which implementation of the project irreversibly curtails the range of potential uses of the environment. ''Resources'' include the natural cultural resources lost or destroyed as a result of the project.

(B) Statement of the relationship between local short-term uses of man's environment and the maintenance and enhancement of long-term productivity. This shall include a brief discussion of the extent to which the proposed action involves trade-off between short-term environmental gains at the expense of long-term losses, or vice versa, and a discussion of the extent to which the proposed action forecloses future options.

(C) Statement of any probable adverse environmental effect which cannot be avoided, such as changes in exposure to noise and changes in level of noise or vibration; water or air pollution; undesirable land use patterns; impacts on public parks and recreation areas, wildlife and waterfowl refuges, or historic sites; damage to life systems; congestion of street traffic in adjacent communities; delays in the provision of essential services (police, fire, ambulance), anticipated changes in accident patterns and other threats to health; and other consequences adverse to the environmental goals set out in section 101(b) of the National Environmental Protection Act, 42 U.S.C. 4331(b). In considering noise levels, applicants should note any conflicts between projected noise levels from rail operations and HUD standards for noise at sensitive sites, such as schools, hospitals, parks and residential locations. (U.S. Department of Housing and Urban Development, ''Noise Abatement and Control: Department Policy Implementing Responsibilities and Standards,'' Departmental Circular 1390.2, Chart; External Noise Exposure Standards for New Construction, April 4, 1971)

(D) Statement of construction impacts, identifying any special problem areas and including:

(i) Noise impacts from construction and any specifications setting maximum noise levels.

(ii) Disposal of spoil and effect on borrow areas and disposal sites (include any specifications).

(iii) Measures to minimize effects on traffic and pedestrians.

(iv) Consideration of non-point source pollution such as might result from water runoff.

(E) Statement of any positive or negative impacts on energy supply and natural resource development, including, where applicable, any effect on either the production or

consumption of energy or other natural resources. Discuss such effects if they are significant.

(F) Discussion of problems and objections raised by other Federal, State or local agencies, and citizens with respect to impact of the project on the environment.

Part III. Discussion of any alternatives to the project that have been considered with respect to impact on the environment. If cost-benefit analyses have been performed, the extent to which environmental costs have been reflected in the analysis should be stated. Underlying studies, reports, and other information obtained and considered in preparing each section of the statement should be identified. For energy comparisons, a possible source is Oak Ridge National Laboratory Report, ''Energy Intensiveness of Passenger and Freight Transport Modes'' by Dr. Eric Hirst, April, 1973. For analyzing community impacts, the following report may be useful: ''The Impacts on Communities of Abandonment of Railroad Service,'' July, 1975, prepared for the U.S. Railway Association by the Public Interest Economics Center, Washington, D.C. In examining the environmental effects of highway transport as an alternative to rail service, applicants may wish to use the following publication: ''A Study of the Environmental Impact of Projected Increases in Intercity Freight Traffic, August, 1971, prepared for the Association of American Railroads by Battelle, Columbus, Ohio.''

Subpart B—Standards for Maintenance of Facilities by Recipients of Obligation Guarantees

§260.17 Applicability.

This subpart prescribes standards governing the maintenance of facilities, as defined in subpart A of this part, that are being acquired, rehabilitated, improved, or constructed with the proceeds of a guaranteed obligation, by the recipient of such guarantee for the period during which any portion of the principal or interest of such obligation remains unpaid.

§260.19 Definitions.

The terms defined in subpart A of this part shall have the same meaning for the purposes of this subpart that such terms are given in §260.3 of this part.

§260.21 Standards.

(a) When the proceeds of an obligation guaranteed by the Administrator are used to acquire, rehabilitate, improve or construct track, roadbed, and related structures, the guarantee recipient shall, as long as any portion of the principal or interest of such obligation remains unpaid, maintain such facilities in at least the highest track Class, as defined by FRA Track Safety Standards in part 213 of this chapter, as that Class in which the rehabilitated, improved, acquired, or constructed track is to be operated upon completion of the project for which the obligation was guaranteed unless a waiver is granted in accordance with §260.25.

(b) When the proceeds of an obligation guaranteed by the Administrator are used in facilities, including those mentioned in paragraph (a) of this section, the recipient shall, during the period in which any portion of the principal or interest in such obligation remains unpaid, maintain such facilities in a manner consistent with sound engineering and maintenance practices and in a condition that will permit the level of use that existed upon completion of the acquisition, rehabilitation, improvement or construction of such facilities unless a waiver is granted in accordance with §260.25.

§260.23 Inspection and reporting.

(a) The facilities subject to the provisions of this subpart shall be inspected at such regular intervals as the Administrator deems necessary to assure compliance with the standards set forth in §260.21. Each recipient shall permit representatives of the FRA to enter upon its property to inspect and examine such facilities at reasonable times and in a reasonable manner. Such representatives shall be permitted to use such testing devices as the Administrator deems necessary to insure that the maintenance standards imposed by this subpart are being followed.

(b) Each recipient shall submit to the Administrator annually financial records and other documents detailing the maintenance performed and the inspections conducted which demonstrate that the recipient has complied with the standards in §260.21.

§ 260.25 Waiver.

Any recipient of a guarantee may petition the Administrator in writing for relief from any or all requirements imposed by this subpart. The Administrator may, for good cause shown, waive or modify any requirements of this part. Good cause may include, but is not limited to, insufficient capital resources of the recipient to comply with these maintenance standards or changes in the level of service required for any facility subject to this subpart.

§ 260.27 Impact on other laws.

Standards issued under this subpart shall not be construed to relieve the recipient of any obligation to comply with any other Federal, State, or local law or regulation.

§ 260.29 Penalties.

If the Administrator finds that a guarantee recipient has violated the requirements of this subpart, such recipient will be subject to civil action for injunction to cease activities which violate this subpart and for any other appropriate civil or criminal relief, including termination, suspension, and punitive damages.

Subpart C—Procedures for Computing the Internal Rate of Return on Projects

§ 260.31 Applicability.

This subpart prescribes the procedures to be followed and the format to be utilized in computing the IRR under paragraph (a)(7)(i) of § 260.7 of subpart A of this part.

§ 260.33 Definitions.

As used in this subpart—

(a) *Investment* means any substantial non-recurring expenditure even if expensed for accounting purposes.

(b) *IRR* means the estimated internal rate of return on a project for which an application for financial assistance is filed pursuant to this part.

(c) *IRS* means the Internal Revenue Service.

§ 260.35 Procedures to be followed and format to be utilized.

(a) A narrative discussion of the IRR computation for the project consisting of the following five parts shall be prepared and provided:

(1) *A detailed description of the project.* This description must present the following: The objectives of the project; what assets will be improved, rehabilitated, acquired or constructed; where they will be located; and how they will be used. It must also describe any other work to be done as a part of the project, and any operating changes, including retirement of assets, which will accompany the investment. For these purposes, the project shall be deemed to include all expenditures (including those for which no Federal assistance is requested) necessary to carry out its objectives.

(2) *A detailed description of the base case.* The base case is the most favorable alternative action the applicant could take with little or no investment. The description must be comparable in scope to the description of the project. In some cases, the most favorable alternative action may be to do nothing, i.e., making no change in the current situation. In other cases, the applicant may have other alternative actions such as rerouting traffic, changing operating practices (perhaps with an increase in operating costs), or relying more heavily on facilities or equipment belonging to others. If the applicant has considered more than one alternative action (requiring little or no investment) to the project, the applicant must describe each of the actions considered and give the rationale for the selection of the base case from among those other actions.

(3) *A discussion of key assumptions.* All general assumptions and those relating only to a particulary cash flow impact which substantially affect the IRR should be explained. Assumptions regarding traffic volumes deserve particular attention. The applicant must specify how much traffic is expected if the project and base case are undertaken, and where the difference, if any, between the project and base case is expected to come from (e.g., diverted from truck, diverted from other railroads, generated by the project, etc.).

Other key assumptions may relate to actions by third parties, such as regulatory agencies and other railroads.

(4) *A discussion of each cash flow impact resulting from the project or base case.* The applicant must identify all the cash receipts and disbursements resulting from the project but not the base case, and vice-versa. Cash flows which would be the same in either event should not be considered. For each cost and benefit used in the IRR computations, the applicant must explain why the particular cash flow will result from the project or base case, and how the size of the cash flow and the corresponding measure in physical units were estimated. In addition, the applicant must identify and discuss important costs and benefits which it has not been able to quantify. The applicant must note which of the benefit and cost items could be measured to confirm the predictions in the IRR computation, and must suggest how such measurements could be made. Appendix A of this subpart lists the most common cash flow impacts of railroad investment projects and base case alternatives, indicates the kinds of actions likely to involve each type of cash flow, suggests how each might be measured (both in physical and monetary units), and discusses special problems associated with each. Appendix A is not exhaustive; other cash flow items should be included in the analysis as appropriate.

(5) *A discussion of the principal areas of uncertainty.* This discussion must indicate why particular values might be different from those used in the computation, and the range into which each uncertain value could be expected to fall. It must also indicate the applicant's subjective level of confidence that the computed IRR is a reasonably close prediction of the project's and base case's financial performance. In some circumstances, the applicant must point out where the IRR fails to incorporate certain important features of the project or the base case, or both. Applicant may enhance its discussion by presenting examples of its own prior experiences with IRR, stating, perhaps, that an audit of past computations has shown marked deviations from actual results regardless of the detail of those computations.

(b) For the project (as it relates to its base case alternative), a thorough presentation of all the computations underlying the IRR using the Forms I–V of appendix B to this subpart shall be prepared and provided. State and local tax impacts need not be included in the computations, unless the applicant has determined that their inclusion substantially affects the IRR. The computation of the IRR must follow the four steps described below. (This procedure cannot be used if the project consists of replacing an asset, usually equipment, which would otherwise remain in service (at high cost) for only a few more years. In that situation, the lifetime of the project (the new asset) is substantially longer than the lifetime of the base case (the old asset), so that it is not possible to get a differential cash flow in every year of the project's life. A possible approach for handling such cases is to determine the discount rate which gives the same average annual cost per unit of output for both the project and the base case. Because it is expected that very few of the applications will involve such replacements, the procedure for handling them will not be detailed here but will be provided upon request.) The foregoing does not apply to the rehabilitation of track or similar replacement of components of an asset which could reasonably be kept in service at high cost for at least 15 years (or the life of the replaced material, if shorter). The IRR on such projects must be computed in accordance with the procedures mandated by this subpart.).

(1) *Step 1: Determination of before-tax case flows.* The applicant must determine, for each year of the project's expected useful life, up to a maximum of 15 years (unless the cash flow impacts of later years would substantially affect the IRR), both the project's and base case's before-tax cash flow impacts (receipts and disbursements). The cash flow estimates must not include the effects of inflation, but rather must be done in constant dollars. The effects of financing must also be excluded; that is the cash flows must be estimated as if the required cash were immediately available at no cost.

The various cash flow impacts for this step 1 must be shown on Forms I through V of appendix B as explained below. On Forms I through V cash flow impacts occurring in the first year of the project and base case are assigned to and recorded in the time period year 1. Cash flows in subsequent years are all assigned to and recorded in the year in which they occur regardless of whether they occur at the beginning or end of the year. For purposes of assigning and recording cash flow impacts of the project and base case, it will be assumed that the project's starting date and thus the commencement of year 1 begins as of the first of the January following the year in which an application for financial assistance is filed.

(i) Capitalized investments which would occur as a part of the project but not in the base case must be entered in Column 1 of Form I. The capitalized investment includes capitalized engineering work, installation expenditures and other startup costs allowable in reporting to the IRS. The total investment for the project must be divided into portions which are homogeneous with respect to depreciation method (if depreciable), depreciation period (if depreciable), year in which the assets enter service, and whether the assets qualify for investment tax credit. (If applicant has a considerable tax credit carryforward, the tax credit must be shown only in the year or years it will result in a reduction of tax payments.) A separate form should be completed for each such portion. Similarly, a set of Forms I must be completed for a capitalized investments which would be made as part of the base case but not the project.

(ii) Sales of released assets (as useful assets or as scrap), which would occur as a part of the project or the base case, must be entered in Column 1 of Form II. As was the case for capitalized investments, there must be a separate Form II for each portion of the assets sold, such that each portion is homogeneous with respect to tax treatment and year of sale. Form II must also be completed for retirements of assets, even though the sale price is zero, if the retirement will affect the applicant's income taxes and thereby the applicant's cash flow. The sale or retirement of an asset at the end of the project's life, if the cash flow impact is substantial enough to merit inclusion in the computation, must also appear on one or more Forms II. (If a project would continue an asset already owned in its prior use but the base case would put the asset to an alternative use, and if the cash flow from that alternative use is difficult to determine, the applicant may do the analysis as if the asset were to be sold in the base case at its fair market value when put to the alternative use. Similarly, if the base case would continue an asset in its present use but the project would result in the asset being employed in an alternative use, the anticipated cash flow of which would be difficult to determine, the asset in the project may be treated as a sale at fair market value in the IRR computations. In either event, the market value of the asset otherwise put to an alternative use would be entered in Column 1 of a Form II and the asset in its current use (in either the project or base case, as the case may be) would be recorded, as to continuing depreciation and income tax credit, if any, on Form I and, as to expenses and contribution to profit, on Form III. However, whenever possible, the anticipated cash flow of the alternative use, whether in the project or base case, should be entered on Form III rather than treated as a theoretical sale at fair market value.)

(iii) Expense items or contributions to profit which arise by reason of the project or the base case must be documented on Form III for the respective case, with a separate form being used for each item.

Columns 1 and 2 of Form III must be completed unless the difference of column 3 can be ascertained only through a direct computation (as, e.g., car-day savings resulting from faster movement over rehabilitated track). When practical, expenses and traffic are to be expressed first in physical units (Columns 1, 2 and 3) and then converted to dollars (Column 4). In instances where this is not practical, the applicant may estimate expenses and contribution directly in dollars using only Columns 1, 2, and 4. In Columns 1 and 2, expense items should always be enclosed in parentheses because they represent cash

outflows. Thus, positive numbers in Columns 3 and 4 will indicate that the project produces a larger cash inflow (or smaller cash outflow) than the base case.

(2) *Step 2: Determination of after-tax cash flows relating to capital assets.* The applicant must compute the annual cash flows after Federal income tax corresponding to each of the before-tax flows recorded on each Form I and Form II in the previous step. If the applicant expects to pay taxes in some years but not others, the applicant will undoubtedly carry forward (or back) the tax losses and credits from years in which no tax was paid, so as to take full advantage of them. In that case, the applicant must estimate when such tax benefits will actually be received, and include them in the cash flow stream at the appropriate time. The appropriate tax rate for such computations is the applicant's marginal tax rate. This is the rate which would apply to one additional dollar of income earned by the applicant. Normally, the marginal rate will be 48% for Federal taxes except in years in which the applicant does not expect to pay taxes. The average or effective tax rate (found by dividing a firm's actual tax payments by its net income before taxes) is not appropriate for this purpose. If the tax rate assumed is different from 48% or if the computations assume the applicant will not pay taxes in certain years, then those assumptions must be explained in the discussion of key assumptions. The tax-related computations must be shown on the same forms as were used to record the pre-tax cash flows. Additional working papers should be submitted as necessary to clarify the computations. The computations to be done on the two forms are as follows:

(i) On each Form I, the applicant must indicate in Column 2 the depreciation schedule which it expects to use in reporting to the IRS. In Column 3, the applicant must indicate how much its tax bill will be reduced as a result of the depreciation shown in Column 2. (If the applicant expects to pay taxes every year, Column 3 is simply 48% of Column 2.) In Column 4, the applicant must indicate the tax reduction, if any, it expects from investment tax credit. (The effect of the tax credit must be computed using the flow through method, in which investment credits are generally treated as reductions in income tax expense of the year in which the credits are actually realized, rather than being deferred and amortized over the productive life of the acquired property). Column 5 is the net after-tax cash flow associated with the investment.

(ii) On each Form II, the applicant must indicate in Column 2 the increase (or decrease) in its Federal income tax payments resulting from the difference between the sale price and the book value of assets to be sold by reason of the project or base case. If an asset is released without a sale or a corresponding write down of book value, Form II is not used, but Form I is used to reflect continuing depreciation as before the release. In Column 3, the applicant must record any recapture of investment tax credit by the IRS. (Such recapture can only occur when an asset is disposed of before it has been in service for seven years.) Finally, Column 4 records the net cash flow in or out.

(3) *Step 3: Determination of aggregate after-tax cash flow.* The applicant must determine the project's aggregate after-tax cash flow using Form IV. This shall be done as follows:

(i) For each year, the corresponding after-tax cash flow (Column 5) on the various Forms I on which the ''project'' box was checked are summed, and the total entered into Column 1 of Form IV. Then the net after-tax cash flows on the base case Forms I are summed and entered into Column 2 of Form IV.

(ii) Similarly, the project and base case Forms II (Column 4) are consolidated and entered into Columns 3 and 4, respectively, of Form IV.

(iii) The Forms III (Column 4) are consolidated into Column 5 of Form IV. The corresponding cash flow after Federal income tax is recorded in Column 6. If the applicant expects to pay taxes every year, Column 6 is simply 52% of Column 5. If applicant expects to pay no taxes, the two columns are identical. If applicant expects to pay taxes in some years but not others, the applicant must incorporate the effects of

carrying losses forward (or back) into the estimated after-tax cash flow.

(iv) The aggregate net cash flow for the project relative to the base case is then found and entered in Column 7 of Form IV.

(4) *Step 4: Computation of the IRR.* The applicant must determine the discount rate for which the present value of the differential cash flow stream is zero. That is, the applicant must find the value of *r* which makes the expression

$$\sum_{i=1}^{r} t \frac{c_i}{(1+r)^i}$$

equal to zero. In the above expression, *r* is the discount rate applied to future cash flows; *i* is an index denoting a particular year of a project's life; *n* is the number of years in the project's life; and c_i is the differential cash flow in year *i*. Computer programs for calculating the rate of return are widely available. If a program is utilized, copies of the printout showing input and output data, and a brief explanation of the program function must be included in the application. If the applicant chooses not to use such a computer program to find the IRR, the applicant may use Form V. If the IRR lies off the graph, it is sufficient to report that the IRR is negative or above 50%. If the nature of the cash flow stream is such that a unique IRR cannot be found, the work done to develop the cash flow stream must be submitted with a note that no IRR could be computed.

(c) Copies of all financial analyses which the applicant did on rejected alternatives to the project, including changes in scale or scope. The applicant need not do any such analyses beyond those already done, nor need the format, assumptions, or procedures used in those analyses be changed to conform to the requirements of these regulations.

(d) A reconcilation between the cash flows used in the IRR computations and all forecasted data presented in the application, both before (for the base case) and after (for the project) giving effect to Federal assistance. This reconciliation must indicate what inflation factor or factors were used in developing the forecasted financial statements as compared to the constant dollar figures used in the IRR computations. The reconciliation must also show how each of the individual parts and subparts of the project relates to the applicant's forecasted financial statements.

APPENDIX A TO PART 260—SELECTED CASH FLOW IMPACTS

Railroad investments usually affect the investor's cash flow by changing some of the following things:

Use of assets.
Contribution from traffic.
Labor requirements.
Locomotive requirements.
Requirements for cars, trailers, and containers.
Maintenance material consumption.
Energy consumption.
Accident rates and severity.
Expenditures needed to meet legal requirements.
Salvage value.
Installation and start up expenses.

While this list is not exhaustive it does identify the most common cash flow impacts.

Some of the items listed, such as start up expenses, are almost always costs of projects or base cases, rather than benefits. Others, such as salvage value, are usually benefits. Most of the items, however, may be either project or base case benefits or costs, depending on the particular situation.

This appendix briefly discusses each of the eleven factors listed above. The discussions include four parts: a list of the kinds of actions which often involve the particular cash flow impact in question; the physical units in which the impact is generally measured; suggestions for converting the physical units to their monetary equivalent; and notes on special characteristics or problems associated with the particular cash flow impact.

USE OF ASSETS

Characteristic Actions: Assets are often released for sale or altenative uses when they are replaced or made unnecessary by new assets. Examples are pole line materials released when microwave is installed; shop equipment released when similar new equipment is acquired; rail replaced by rail in better condition; and land and track materials released when yards, shops, and terminals are made unnecessary by new facilities elsewhere. Some other types of actions, such as line changes and the installation of centralized traffic control, often permit some track segments to be abandoned, thereby releasing track material for sale or other uses.

On the other hand, some actions involve the use of assets already owned, thereby prohibiting their sale or use for other purposes.

Examples are car modifications and projects involving land and buildings already owned.

Physical Units: Feet (or miles) of rail, number of ties, acres of land, etc.

Monetary Value: The value of an asset released by an action depends on what will be done with it. The value of an asset occupied by an action, on the other hand, depends on what would have been done with it in the absence of the action. Regardless of whether it is the action or its alternative which makes the material available, one must first carefully specify what is assumed to happen to the asset both with and without the action, and identify the factors which change the cash flow stream. Depending on the particular circumstances, any of the following might be involved: Payment received from selling the asset; a multi-year stream of income produced by the asset in some use; tax paid on the sale of the asset; expenditure for dismantling and/or moving the asset; recapture by the IRS of investment tax credit taken when the asset was purchased (if it had been in use for less than seven years). Also, if the owner of the asset sells or retires it, he would lose the tax reductions he is receiving from depreciating the asset. It is the use of the released asset which values it. Thus, a released asset such as rail which, by cascading, results in the subsequent release of less valuable rail, must be valued in its use and not as the value of subsequently released assets.

In cases in which the asset is transferred to another use which produces income over several years, the effect of releasing the asset extends over several years, and must be expressed as a series of annual cash flows, rather than a lump sum.

Special Features: A common error in project evaluations is to value a used asset at its book value (i.e., purchase price less accumulated depreciation). The book value may be far from the value of the asset on the open market, especially in the case of rail released by track abandonments and land released by the abandonment of facilities in urban areas. The only way the book value of retired assets enters into the cash flow stream is in determining the tax paid on the sale of the asset (or the tax saving if the asset is discarded or sold for less than its book value).

In calculating the tax paid on the sale of a released asset, the ordinary tax rate (48%) should be used, except when the capital gains rate applies.

It is sometimes difficult or impossible to estimate the contribution to profit which a particular asset, such as second hand rail, will produce in an alternative use. In such cases, it is better to do the financial analysis on the assumption that the asset in question would be sold at its fair market value (even though it would in fact be put to an alternative use), rather than leaving the asset out of the computations entirely.

CONTRIBUTION FROM TRAFFIC

Characteristic Actions: Actions which affect the availability and attractiveness of the railroad to shippers. The action may involve giving the shipper better access to the railroad (track extensions and terminal improvements) or better service. Line consolidations, on the other hand, may involve abandonments which deprive some shippers of service, or may result in such degradations in service quality that some shippers switch to other carriers. Faster service can result from more power or improvements in track, yards, terminals, signals, and communication. Another component of service quality, reduced loss and damage to lading can be occasionally improved by eliminating accidents (wayside warning devices), using specialized cars, and making improvements to yard and terminal facilities. Service quality can also be enhanced by purchases of additional freight cars and trailers, so as to reduce the likelihood of car shortages. Another aspect of service quality is reliability, which may be affected by improvements in yards, terminals, and communications, as well as the elimination of accidents. Still another component of service quality is the cost to the shipper of packing and loading, which may be affected by investments in specialized cars and terminal facilities.

Physical Units: Car-loads.

Monetary Value: The contribution to profit is found by subtracting the variable cost of moving the traffic from the associated revenue. The variable cost is best estimated by a careful study of the operations and costs of the particular movements involved.

Such a study is not practical for certain traffic. In these cases the best alternative may be to estimate the variable cost using system averges, as is done in the Interstate Commerce Commission's Rail Form A, Carload Cost Scales, and Rail Revenue Contribution studies. Where appropriate, such system average costs should be adjusted to exclude costs not involved in the particular movement, and to reflect the current, not the historical, costs of assets to be purchased in the future.

Special Features: The contribution from new traffic resulting from an improvement is extremely important, but it is also one of the most difficult of all project benefits to estimate. One major problem is estimating the volume of traffic likely to result from a particular improvement, especially if the improvement affects service quality. A second serious problem is estimating the variable cost of particular movements. (These estimates may be facilitated by a six-part FRA cost study currently in progress.)

LABOR REQUIREMENTS

Characteristic Actions: Labor requirements are often reduced by automation, facility consolidation, faster train running times, reductions in switch engine requirements, better communications for operations, and reductions in maintenance needs. On the other hand, actions involving new or expanded yards, terminals, or shop facilities may increase manpower requirements.

Physical Units: Man-hours, number of employees.

Monetary Value: The value of labor depends on the particular situation. If the action results in a change in the number of employees or in overtime hours, the wages and fringe benefits associated with that change directly affect the railroad's cash flow. If an action changes or eliminates work for employees without changing jobs or overtime, the change will affect the railroad's cash flow if either:

The man-hours released or occupied by the change can be used on other profitable tasks which would otherwise not be done, or which would be accomplished by paying overtime or hiring more people; or

The action can be combined with one or more other actions, each of which saves or requires a fraction of an employee, so that the set of actions results in a change in the size of the work force.

In either case, the value of the man-hours released or consumed is the cost of the associated wages and fringe benefits. On the other hand, if the result of the action is simply to give existing employees more (or less) free time on the job, no cash impacts can be attributed to the change in the amount of work.

Special Features: There are several different kinds of labor which a project might affect: road crews, yard crews, maintenance-of-way, shop, inspection, clerical, and other.

Determining the wages and fringe benefits associated with a particular man-hour is often not straightforward because of rules governing employee compensation. The payment of some train crews on a mileage rather than a time basis is an example.

Wage and fringe benefit savings resulting from the elimination of jobs may be at least partially offset by costs incurred as a result of labor protection agreements. Depending on the situation, these costs may be lump-sum or recurring. Determination of employee protection costs is complicated by the fact that the individual who holds a position which is to be eliminated may not be the person who is actually laid off as a result of the elimination. Rather, the person whose job is actually eliminated may displace a person with less seniority holding a similar job. That person may, in turn, displace another employee and so on.

LOCOMOTIVE REQUIREMENTS

Characteristic Actions: Actions reducing train running time (track upgrading, line changes, signal system improvements, etc.), or which permit moving the same traffic with fewer trains (yard consolidations) or with fewer terminal delays (yard and terminal improvements) can all reduce the number of road engines needed. The number of switch engines needed can be reduced by some types of yard and terminal improvements, such as yard consolidations, track changes, and the installation of weigh-in-motion scales. Actions which lead to increased traffic, such as track extensions, may increase the need for both types of locomotives.

Physical Units: Locomotive-years (or locomotive-hours or locomotive-days). Note that one does not have to save 365 locomotive-days to save a locomotive-year, since locomotives are not available for service 365 days per year because of maintenance work. If a railroad's locomotives were available for service 78% of the time, applicant would only have to save 285 locomotive-days to save a locomotive-year.

Monetary Value: One way to estimate the value of a locomotive-year is the following four-step process:

1. Estimate the after-tax cash flow stream resulting from owning a locomotive. The components of this stream would be: The investment expenditure; investment tax credit; tax savings from depreciation; normal maintenance; overhauls; and salvage value. The cash flow stream must be in constant dollars of the same base year as would be used in the rest of the IRR computation.

2. Calculate the net present value of the cash flow stream, using the yield on 180-day United States treasury bills as the discount rate.

3. Find a stream of equal annual outlays which produces the same net present value as was found in Step 2. The anual outlay may be found by multiplying the net present value by

$$\frac{r(1+r)^a}{(1+r)^a - 1}$$

where r is the yield in Step 2, and n is the number of equal annual outlays.

4. Find the pre-tax equivalent of the after-tax annual payment found in Step 3, by dividing the after-tax figure by one minus the railroad's marginal tax rate. This is the pre-tax value of a locomotive year, expressed in dollars of the base year chosen in Step 1.

The procedures set forth above for valuing estimated savings or costs from locomotive requirements on a locomotive-year basis may be used only where it is not practical to

associate particular future locomotive purchases with the project. Where practical, changes in locomotive requirements (except for locomotives belonging to other railroads) must be treated as capital investments that would have to be made in the base case but not in the project or vice versa, with due recognition given to those fixed charges associated with ownership of locomotives that would be incurred if such locomotives were purchased. This also applies to Requirements for Cars, Trailers, and Containers, which follows.

Increased locomotive productivity is somewhat analogous to increased labor productivity (see Labor Requirements) in that it may not always lead to significant cash savings. This is especially true with switch engines, since a decrease in car movements may not reduce the number of engines required if the number of locations which the switch fleet must serve does not also change. On the other hand, reducing the number of locations covered (by consolidating yards, for example) may decrease switch engine requirements. As in the case of increased labor productivity, increased locomotive productivity affects a railroad's cash flow only if a locomotive can be sold (or a purchase avoided) or if the locomotive is able to do other profitable work which would not be done otherwise.

Special Features: The locomotive values computed using the procedure above include maintenance and overhaul expense, but not fuel or other labor expense. Therefore any concomitant change in fuel or labor (except maintenance) should be estimated separately. Care should be taken to exclude changes in locomotive maintenance costs from any other estimates of charges in maintenance costs resulting from the investment project.

REQUIREMENTS FOR CARS, TRAILERS, AND CONTAINERS

Characteristic Actions: Actions which change train running time (such as track upgrading, purchase of additional power, line changes and signal improvements); actions which change the time cars spend in yards, or permit bypassing yards altogether (yard improvements and improved communication systems); actions which change the time cars are out of service for maintenance (shop facilities, car modifications, track upgrading); and actions which affect the turn-around time for cars in terminals.

Physical Units: Car-days.

Monetary Value: The procedure for finding the value of a locomotive-year or day is equally applicable to cars. (See Locomotive Requirements).

Another acceptable approach is to use per diem costs (including incentive per diem) since those charges approximate the cost of ownership. Although incentive per diem is in addition to car ownership costs, its inclusion in the car-day value is justified because it reflects, to some degree, the fact that a railroad sometimes loses business during short peaks in demand, because it is not immediately able to buy or hire the cars necessary to take advantage of a particular business opportunity.

Over the long run, however, a railroad need not continually lose traffic, so long as it is willing to incur the cost of owning a sufficient number of cars. Therefore, it is not appropriate to use the investing railroad's average contribution per car-day to value improved car utilization in IRR calculations. Given that per diem is a satisfactory approximation to the cost of car ownership, there is no need to distinguish between foreign car-days saved and investor car-days saved by an action.

Special features: The valuation of improved car utilization is complicated by the fact that some projects, such as improvements in classification yards, may affect the entire car fleet, while other projects may affect only certain kinds of cars. For example, it may be that all the cars affected by a particular terminal improvement are refrigerator cars. The car-day value to be used is therefore not necessarily the same in all projects. Rather, it depends on the type of cars involved.

MAINTENANCE MATERIAL CONSUMPTION

Characteristic Actions: Since nearly all assets require maintenance, almost any action involving the acquisition of new assets will lead to expenditures for maintenance materials. On the other hand, actions which involve taking assets out of service, such as replacements, eliminate the need to maintain the retired assets. Improving track conditions may decrease equipment maintenance, while decreasing traffic volumes may decrease track maintenance needs.

Primary Units: List of materials involved (and quantities).

Monetary Value: The value of maintenance materials is the price of those materials (plus freight in and labor added, if any). Where a direct relationship exists between maintenance labor and materials, it may be more convenient to first estimate man-hours and then compute material costs in proportion to the man hours.

Special Features: The material costs (or savings) associated with changes in maintenance may include work equipment, as well as the materials consumed during maintenance.

Usually the best basis for predicting maintenance costs is the maintenance history of similar assests in similar service. Manufacturers can also sometimes provide projections of maintenance expense. To the extent

practical, care should be taken to specifically reflect cyclical maintenance (overhauls) by assigning the maintenance cost (or savings) to the years in which they will actually occur, rather than normalizing, or smoothing out, the cash flow stream.

Assets which permit maintenance savings often involve maintenance costs which partially offset those savings.

ENERGY CONSUMPTION

Characteristic Actions: Actions changing locomotive activity or locomotive efficiency. Line changes and locomotive replacements may reduce fuel consumption by road engines. Improvements in yards and terminals, as well as locomotive replacements, may reduce the fuel consumed by switch engines. Improvements in buildings and structures can cut heating costs.

Physical Units: Gallons, kilowatt-hours, etc.

Monetary Value: Found by multiplying the fuel or electricity by the current price per unit.

Special Features: Road engine energy consumption generally varies with gross tonmiles and speed. Yard engines are frequently idling, consuming energy, even when not in use. Thus, energy consumption may vary with the number of switch engine crew shifts rather than the amount of work done. Care should be taken not to count changes in locomotive energy consumption twice, once as a change in locomotive requirements and once as a change in energy consumption.

ACCIDENT RATES AND SEVERITY

Characteristic Actions: Accidents may be reduced by wayside warning detectors (hot box detectors, grade crossing protection, dragging equipment detectors, etc.), lading protection devices, some specially equipped cars, some yard and terminal improvements, and track upgrading.

Physical Units: Accidents (of several different types) per year.

Monetary Value: Only the monetary cost likely to be borne by the railroad would be relevant to the IRR computation. This would include damage to equipment, roadway and lading, and the cost of wreckage removal as well as injury to people. The expected cost of an accident varies drastically, depending on the particular situation.

Special Features: Accidents delay trains and yard and terminal operations. Thus, actions which reduce accidents may also improve car and locomotive productivity. Care should be exercised that such benefits are counted only once.

EXPENDITURES NEEDED TO MEET LEGAL REQUIREMENTS

Characteristic Actions: Actions permitting abandonment of old facilities or equipment may reduce the need for such expenditures. New facilities may make some such expenditures necessary.

Physical Units: List of actions, such as grade crossing protection, water treatment facilities, or the installation of retention toilets, which would be required to bring the facilities or equipment in question up to legal standards.

Monetary Value: The total cost of the improvements including engineering (except engineering work already done), capital expenditure, maintenance, and operation. These expenditures should be offset by the appropriate tax reductions (resulting from depreciation and investment tax credit) which would result from those improvements.

SALVAGE VALUE

Characteristic Actions: Acquisition of new assets or disposal of existing assets.

Physical Units: List of the particular assets involved (such as tamping machine, 500′ of 112# rail, etc.)

Monetary Value: The cash flow resulting from disposing of the assets or using them elsewhere. (See Use of Assets).

Special Features: The salvage value of most assets declines as the asset ages. The value of land often remains roughly constant, as does the value of materials in well maintained track. The salvage value of assets which cannot be used for other purposes, such as a culvert, is zero.

When salvage values are small relative to other benefits and costs, and when they are heavily discounted (because they occur far in the future), their impact on the IRR is likely to be negligible. In such cases, the salvage value can be safely ignored.

INSTALLATION AND START-UP EXPENSES

Characteristic Actions: Most fixed facilities.

Physical Units: Man-hours, list of materials required.

Monetary Value: As noted in the discussion of labor requirements the value of the labor depends on the particular situation. The value of the materials would normally be their market price.

Special Features: Often all or part of the expenditures needed to get a new asset in place and operating is capitalized. In such a case, the capitalized portion of the expenditure should be included as part of the investment cost, but not counted again as a start-up expense.

APPENDIX B TO PART 260—FORMS TO BE USED IN COMPUTING IRR

Form I.—Analysis of capitalized investment (constant dollars)

Applicant ....
Project ....
Date ....
Sheet No ..... of.....
Portion of investment covered by this sheet ....
Depreciation method used ..... Depreciation period ....
This investment would occur in the ☐ Project ☐ Base case (check one)

Year	(1)—Amount capitalized	(2)—Depreciation	(3)—Tax reduction from depreciation	(4)—Tax reduction from investment tax credit	(5)—Net cash flow in (out)
1.					
2.					
3.					
4.					
5.					
6.					
7.					
8.					
9.					
10.					
11.					
12.					
13.					
14.					
15.					
Totals.					

Instructions

Use separate forms for portions of the investment which would receive different tax treatment or which would enter service in different years.

Estimate amounts in cols. 1–4 as would be done in reporting to IRS.

Col. 5 equals col. 3 plus col. 4 minus col. 1.

Form II.—Analysis of sale or retirement of assets (constant dollars)

Applicant ....
Project ....
Date ....
Sheet No ..... of.....
Assets covered by this sheet ....
Depreciation method used ..... Depreciation period ....
Book value of assets at time of sale ....
This sale would occur in the ☐ Project ☐ Base case (check one)

Year	(1)—Sale price	(2)—Tax on gain (or tax saving on loss) from disposal	(3)—Tax credit recapture	(4)—Net cash flow in (out)
1.				
2.				
3.				
4.				
5.				
6.				
7.				
8.				
9.				
10.				
11.				
12.				
13.				
14.				
15.				
Totals.				

Instructions

Use a separate form for each portion of the assets which would receive different tax treatment or be disposed of at different times.

Estimate amounts in cols. 1–3 as would be done in reporting to the IRS.

Col. 4 equals col. 1 minus col. 2 (plus col. 2 if a tax saving occurs) minus col. 3.

Form III.—Analysis of expenses and contribution to profit (constant dollars)

Applicant ....
Project ....
Date ....
Sheet No ..... of.....
Expense or contribution ....
Physical units used ..... Monetary value per physical unit ....

Year	Physical units			(4)—Cash difference (in before-tax constant dollars)
	(1)—Project	(2)—Base case	(3)—Difference	
1.				
2.				
3.				
4.				
5.				
6.				
7.				
8.				
9.				
10.				
11.				
12.				
13.				
14.				
15.				
Totals.				

Instructions

This form applies to all cashflow impacts except capitalized investments and sales or retirements of assets. Use a separate form for each type of expense or contribution to profit.

Col. 3 equals col. 1 minus col. 2.

Col. 4 equals col. 3 times monetary value per physical unit.

Form IV.—Consolidation of cash flows (constant dollars)

Applicant ....
Project ....
Date ....
Sheet No ..... of.....

Year	Form I totals		Form II totals		Form III		(7)—Net cash flow in (out)
	(1)—Project	(2)—Base case	(3)—Project	(4)—Base case	(5)—Before tax totals	(6)—After tax	
1.							
2.							
3.							
4.							
5.							
6.							
7.							
8.							
9.							
10.							
11.							
12.							
13.							
14.							
15.							
Totals.							

Instructions

Cols. 1 through 5 are found by summing the right most columns on the indicated forms I–III.

Col. 6 equals col. 5 times (1 minus marginal tax rate) unless taxes will be paid in some years but not others.

Col. 7 equals col. 1 plus col. 3 plus col. 6 minus col. 2 minus col. 4. The subtracting of a (net cash flow out) results in the addition of a positive number.

Form V.—Computation of IRR (constant dollars)

Applicant ....
Project ....
Date ....
Sheet No ..... of.....

Year	(1)—Cash flow	Present value					
		Factor	(2)—Value at 10 pct	Factor	(3)—Value at 25 pct	Factor	(4)—Value at 40 pct
1		0.909		0.800		0.714	
2		.826		.640		.510	
3		.751		.512		.364	
4		.683		.410		.260	
5		.621		.328		.186	
6		.564		.262		.133	
7		.513		.210		.095	
8		.467		.168		.068	
9		.424		.134		.048	
10		.386		.107		.035	
11		.350		.086		.025	
12		.319		.069		.018	
13		.290		.055		.013	
14		.263		.044		.009	
15		.239		.035		.006	
Total.							

$$\text{IRR} = \frac{\text{present value of cash flow stream}}{\text{.....}}$$

Instructions

1. Col. 1 is brought from form IV col. 7
2. Cols. 2, 3, and 4 are found by multiplying col. 1 each time by the indicated factor.
3. Plot totals of cols. 1, 2, 3, and 4 against discount rate used (0, 10, 25, and 40 pct respectively). Applicant must indicate scale on horizontal axis of chart and connect the points in a column (1–4) sequence.
4. IRR is the discount rate corresponding to the point at which the graphical presentation intersects the zero present value ordinate.''

interpolation chart

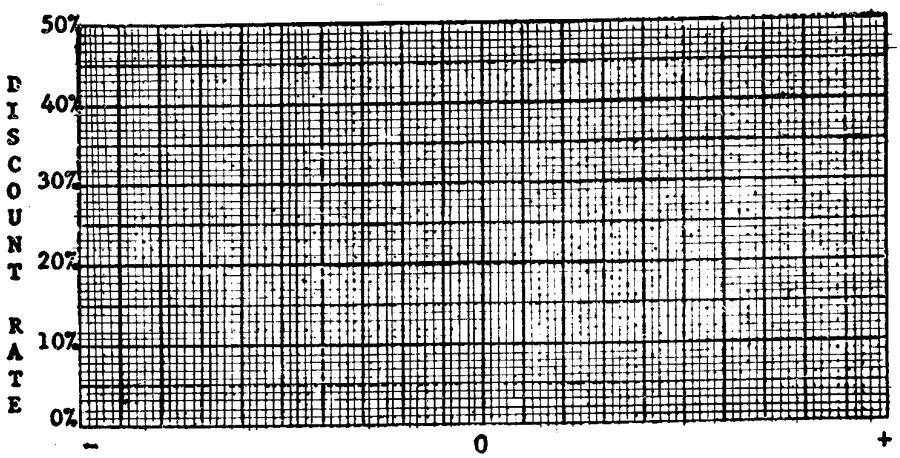

PART 265—NONDISCRIMINATION IN FEDERALLY ASSISTED RAILROAD PROGRAMS

Subpart A—General

Sec.
265.1 Purpose.
265.3 Applicability.
265.5 Definitions.

Subpart B—Requirements

265.7 Nondiscrimination clauses.
265.9 Affirmative action program—General.
265.11 Submission of affirmative action program.
265.13 Contents of affirmative action program.
265.14 Determining the MBE status of a business.
265.14–1 Appeals of determination of MBE status.
265.15 Implementation and maintenance of affirmative action program.
265.17 Review of affirmative action program.

Subpart C—Compliance

265.19 Compliance information.
265.21 Conduct of investigations.
265.23 Procedures for effecting compliance.
265.25 Other information.

APPENDIX A TO PART 265

AUTHORITY: Sec. 905 of the Railroad Revitalization and Regulatory Reform Act of 1976, Pub. L. 94–210, 90 Stat. 31; regulations of the Office of the Secretary of Transportation, 49 CFR 1.49(u).

SOURCE: 42 FR 4286, Jan. 24, 1977, unless otherwise noted.

Subpart A—General

§265.1 Purpose.

The purpose of this part is to effectuate the provisions of section 905 of the Railroad Revitalization and Regulatory Reform Act of 1976 (hereinafter referred to as the ''Act'') to ensure that no person in the United States shall on the grounds of race, color, national origin, or sex be excluded from participation in, or denied the benefits of, or be subjected to discrimination under, any project, program or activity funded in whole or in part through financial assistance under the Act, or any provision of law amended by the Act. Nothing contained in these regulations is intended to diminish or supersede the obligations made applicable by either title VI of the Civil Rights Act of 1964, (42 U.S.C. 2000d), or Executive Order No. 11246, (42 U.S.C. 2000e (note)). Subsection (d) of section 905 of the Act authorizes the Secretary to prescribe such regulations and take such actions as are necessary to monitor, enforce, and affirmatively carry out the purposes of that section. This authority coupled with the provisions of section 906 of the Act, which requires the establishment of a Minority Resource Center which is authorized to encourage, promote and assist in the participation by MBE enterprises in the restructuring, improvement, revitalization and maintenance of our Nation's railroads, provides the basis for requirements for the development of affirmative action programs by recipients of Federal financial assistance and certain of their contractors to insure that minorities and MBEs are afforded ample consideration with respect to employment and contractual opportunities produced as a result of the implementation of the Act and other provisions of law amended by the Act.

§265.3 Applicability.

This part applies to any project, program, or activity funded in whole or in part through financial assistance provided under the Act, and to any activity funded under any provision of the Regional Rail Reorganization Act of 1973, as amended (45 U.S.C. 701 *et seq.*) or the Rail Passenger Service Act, as amended (45 U.S.C. 501 *et seq.*) amended by the Act including the financial assistance programs listed in appendix A. It applies to contracts awarded to implement the Northeast Corridor Project and to financial assistance programs administered by the United States Railway Association.

§265.5 Definitions.

As used in this part, unless the context indicates otherwise:

(a) *Act* means the Railroad Revitalization and Regulatory Reform Act of 1976 (Pub. L. No. 94–210).

(b) *Administrator* means the Federal Railroad Administrator or his delegate.

(c) *Affirmative action program* means the program described in §265.9 through §265.15 of this part.

(d) *Agency* means the Federal Railroad Administration.

(e) *Applicant* means persons applying for financial assistance under any of the Rail Acts.

(f) *Contractor* means a prime contractor or a subcontractor who will be paid in whole or in part directly or indirectly from financial assistance provided under the Rail Acts.

(g) [Reserved]

(h) *Includes* means includes but not limited to.

(i) *Minority* means women, Blacks, Hispanic Americans, American Indians, American Eskimos, American Orientals and American Aleuts.

(j) *MBE* means a business concern which is owned and controlled by a minority. For the purpose of this part, *owned and controlled* means a business:

(1) Which is at least 51 per centum owned by one or more minority individuals; or, in the case of a publicly owned business, at least 51 per centum of the stock of which is owned by one or more minority individuals; and

(2) Whose management and daily operations are controlled by one or more such individuals.

(k) *MBE Resource Center* means the Minority Resource Center established in the Department of Transportation pursuant to section 906 of the Act.

(l) *Rail Acts* means the Railroad Revitalization and Regulatory Reform Act of 1976, the Regional Rail Reorganization Act of 1973, as amended (45 U.S.C. 701 *et seq.*) and the Rail Passenger Service Act, as amended (45 U.S.C. 501 *et seq.*).

(m) *Recipient* means a person who receives financial assistance under any of the Rail Acts except under section 602 of the Rail Passenger Service Act, as amended (45 U.S.C. 501 *et seq.*).

(n) *Underutilization* means the condition of having fewer minority employees in a particular job group or fewer awards of contracts to MBEs than would reasonably be expected by their availability for such jobs or awards.

[42 FR 4286, Jan. 24, 1977, as amended at 44 FR 36339, June 21, 1979]

Subpart B—Requirements

§ 265.7 Nondiscrimination clauses.

(a) Each agreement for financial assistance made under any provision of the Rail Acts shall include, or in the case of agreements made prior to the effective date of this part, shall be amended to include, the following clauses:

(1) As a condition to receiving Federal financial assistance under the Railroad Revitalization and Regulatory Reform Act of 1976 (''Act''), or the provisions of the Regional Rail Reorganization Act of 1973, as amended (45 U.S.C. 701 *et seq.*), or the Rail Passenger Service Act of 1970, as amended (45 U.S.C. 501 *et seq.*) amended by the Act (collectively called, together with the Act, the ''Rail Acts''), the recipient hereby agrees to observe and comply with the following:

(i) No person in the United States shall on the ground of race, color, national origin or sex be excluded from participation in, or denied the benefits of, or be subjected to discrimination under, any project, program, or activity funded in whole or in part through such assistance.

(2) The following specific discriminatory actions are prohibited:

(i) A recipient under any project, program or activity to which these clauses apply shall not, directly or through contractual or other arrangements, on the ground of race, color, national origin, or sex:

(A) Deny a person any service, financial aid, or other benefit provided under such project, program or activity;

(B) Provide any service, financial aid, or other benefit to a person which is different, or is provided in a different manner, from that provided to others under such project, program or activity;

(C) Subject a person to segregation or separate treatment in any matter related to his receipt of any service, financial aid or other benefit under such project, program or activity;

(D) Restrict a person in any way in the enjoyment of any advantage or privilege enjoyed by others receiving

any service, financial aid or other benefit under such project, program or activity; or

(E) Deny a person an opportunity to participate in such project, program or activity through the provision of services or otherwise or afford him an opportunity to do so which is different from that afforded others under such project, program or activity.

(ii) A recipient, in determining the types of services, financial aid, or other benefits, or facilities which will be provided under any such project, program or activity or the class of persons to whom, or the situations in which such services, financial aid, other benefits, or facilities will be provided under any such project, program or activity, or the class of persons to be afforded an opportunity to participate in any such project, program or activity shall not, directly or through contractual or other arrangements, utilize criteria or methods of administration which have the effect of subjecting persons to discrimination because of their race, color, national origin, or sex, or have the effect of defeating or substantially impairing accomplishment of the objectives of the project, program or activity, with respect to individuals of a particular race, color, national origin or sex.

(iii) In determining the site or location of facilities, a recipient shall not make selections with the purpose or effect of excluding persons from, denying them the benefits of, or subjecting them to discrimination under any project, program or activity to which these clauses apply on the grounds of race, color, national origin or sex, or with the purpose or effect of defeating or substantially impairing the accomplishment of the objectives of these clauses.

(iv) The recipient shall not discriminate against any employee or applicant for employment because of race, color, national origin or sex. Except as otherwise required by the regulations or orders of the Administrator, the recipient shall take affirmative action to insure that applicants for employment are employed, and that employees are treated during employment, without regard to their race, color, national origin or sex. Such action shall include but not be limited to the following: Employment, promotion, demotion, transfer, recruitment or recruitment advertising, layoff or termination, rates of pay or other forms of compensation, and selection for training, including apprenticeship. The recipient agrees to post in conspicuous places, available to employees and applicants for employment, notices to be provided by the agency's representative setting forth the provisions of these nondiscrimination clauses. The recipient understands and agrees that it shall not be an excuse for the recipient's failure to provide affirmative action that the labor organizations with which the recipient has a collective bargaining agreement failed or refused to admit or qualify minorities for admission to the union, or that the provisions of such agreements otherwise prevent recipient from implementing its affirmative action program.

(v) The recipient shall not discriminate against any business organization in the award of any contract because of race, color, national origin or sex of its employees, managers or owners. Except as otherwise required by the regulations or orders of the Administrator, the recipient shall take affirmative action to insure that business organizations are permitted to compete and are considered for awards of contracts without regard to race, color, national origin or sex.

(3) As used in these clauses, the services, financial aid, or other benefits provided under a project, program, or activity receiving financial assistance under the Rail Acts include any service, financial aid, or other benefit provided in or through a facility funded through financial assistance provided under the Rail Acts.

(4) The enumeration of specific forms of prohibited discrimination does not limit the generality of the prohibition in paragraph (a)(1)(i) of this section.

(5) These clauses do not prohibit the consideration of race, color, national origin or sex if the purpose and effect are to remove or overcome the consequences of practices or impediments which have restricted the availability of, or participation in, recipient's operations or activities on the grounds of race, color, national origin or sex.

Where prior discriminatory or other practice or usage tends, on the grounds of race, color, national origin or sex, to exclude individuals or businesses from participation in, to deny them the benefits of, or to subject them to discrimination under any project, program or activity to which these clauses apply, the recipient must take affirmative action to remove or overcome the effects of the prior discriminatory practice or usage. Even in the absence of prior discriminatory practice or usage to which this part applies, the recipient is expected to take affirmative action to insure that no person is excluded from participation in or denied the benefits of the project, program or activity on the grounds of race, color, national origin or sex, and that minorities and MBEs are afforded a reasonable opportunity to participate in employment and procurement opportunities that will result from financial assistance provided under the Rail Acts.

(6) The recipient agrees to take such actions as are necessary to monitor its activities and those of its contractors who will be paid in whole or in part with funds provided by the Rail Acts, or from obligations guaranteed by the Administrator pursuant to the Rail Acts, except obligations guaranteed under section 602 of the Rail Passenger Service Act, in order to carry out affirmatively the purposes of paragraph (a)(1) of this section, and to implement the affirmative action program developed and implemented pursuant to 49 CFR part 265.

(7) The recipient shall, in all advertisements for employees, or solicitations for services or materials from business organizations placed by or on behalf of the recipient, in connection with any project, program or activity funded in whole or in part with financial assistance under the Rail Acts, state that all applicants for employment will receive consideration for employment, and all business organizations will receive consideration for an award of a contract, without regard to race, color, national origin or sex.

(8) The recipient shall send to each labor organization or representative of workers with which it has a collective bargaining agreement or other contract or understanding a notice to be provided by the agency's representative, advising the labor organization or workers' representative of the recipient's commitments under section 905 of the Act, and shall post copies of the notice in conspicuous places available to employees and applicants for employment.

(9) The recipient shall comply with all provisions of section 905 of the Act, the Civil Rights Act of 1964, any other Federal civil rights act, and with the rules, regulations, and orders issued under such acts.

(10) The recipient shall furnish all information and reports required by the rules, regulations, and orders of the Administrator, and will permit access to its books, records, and accounts by the Administrator for purposes of investigation to ascertain compliance with rules, regulations, and orders referred to in paragraph (a)(9) of this section.

(11) Recipient shall furnish such relevant procurement information, not included in its affirmative action program as may be requested by the MBE Resource Center. Upon the request of the recipient, the Center shall keep such information confidential to the extent necessary to protect commercial or financial information or trade secrets to the extent permitted by law.

(12) In the event of the recipient's noncompliance with the nondiscrimination clauses of this agreement, or with the provisions of section 905 of the Act, the Civil Rights Act of 1964, or with any other Federal civil rights act, or with any rules, regulations, or orders issued under such acts, this contract will, after notice of such noncompliance, and after affording a reasonable opportunity for compliance, be canceled, terminated, or suspended in whole or in part and the recipient may be declared ineligible for further Federal financial assistance in accordance with procedures authorized in section 905 of the Act, or as otherwise provided by law.

(13) The recipient shall not enter into any contract or contract modification whether for the furnishing of supplies or services or for the use of real or personal property, including lease arrangements, or for construction, in connection with a project, program or

activity which receives financial assistance under the Rail Acts with a contractor debarred from or who has not demonstrated eligibility for Federal or federally assisted contracts, and will carry out such sanctions and penalties for violation of this part as may be imposed upon contractors and subcontractors by the Administrator or any other authorized Federal official. The recipient shall insure that the clauses required by 41 CFR 60–1.46 implementing Executive Order 11246 will be placed in each non-exempt federally assisted construction contract.

(14) The recipient agrees to comply with and implement the written affirmative action program as approved by the Administrator pursuant to § 265.17 of title 49 CFR.

(15) The recipient agrees to notify the Administrator promptly of any law suit or complaint filed against the recipient alleging discrimination on the basis of race, color, national origin or sex.

(16) The recipient shall include the preceding provisions of paragraphs (a) (1) through (15) of this section in every contract or purchase order, whether for the furnishing of supplies or services or for the use of real or personal property, including lease arrangements, or for construction relating to projects, programs or activities financed in whole or in part under the Rail Acts. The recipient shall cause each such contractor or vendor to include the provisions of paragraphs (a) (1) through (15) of this section in every subcontract. The recipient will take such action with respect to any such contract or purchase order as the Administrator may direct as a means of enforcing such provisions including sanctions for noncompliance; provided, however, that in the event the recipient becomes involved in, or is threatened with, litigation with a contractor or vendor as a result of such direction by the Administrator, the recipient may request the United States to enter into such litigation.

§ 265.9 Affirmative action program—General.

Recipients of financial assistance under the Rail Acts and their contractors, as specified herein, shall develop and maintain an affirmative action program to insure that persons and businesses are not discriminated against because of race, color, national origin or sex in programs, projects and activities financed in whole or in part through financial assistance provided under the Rail Acts, and that minorities and MBEs receive a fair proportion of employment and contractual opportunities which will result from such programs, projects and activities.

§ 265.11 Submission of affirmative action program.

(a) Each application for financial assistance under any of the Rail Acts shall, as a condition to its approval and the extension of any financial assistance pursuant to the application, contain or be accompanied by two copies of a written affirmative action program for review by and approval of the Administrator. Recipients that have already entered into an agreement or other arrangement providing for such assistance shall, within 60 days after the effective date of this part, develop and submit to the Administrator two copies of a written affirmative action program for review by and approval of the Administrator and thereafter maintain such program.

(b)(1) Beginning 30 days after the effective date of this part, and until 120 days after such date, each recipient shall require any contractor, as a condition to an award of a contract, for $50,000 or more for services or products on a project receiving federal financial assistance under a program covered by section 905 of the Act:

(i) To furnish to the recipient a written assurance that it will, within 90 days after the date of the award, develop and maintain a written affirmative action program meeting the requirements of this part for the project, program or activity covered by the contract,

(ii) To require each of its subcontractors receiving an award of a subcontract for $50,000 or more within 120 days after the effective date of this part, to furnish to the contractor as a condition to such an award the written assurance described in paragraph (b)(1)(i) of this section.

(2) Beginning 120 days after the effective date of this part, each recipient

shall require as a condition to the award of a contract or subcontract of $50,000 or more that the contractor or subcontractor furnish a certificate to the recipient or contractor as appropriate that a written affirmative action program meeting the requirements of this part has been developed and is being maintained.

(3) Notwithstanding paragraphs (b)(1) and (2) of this section, each contractor or subcontractor having a contract or $50,000 or more but less than 50 employees shall be required to develop and maintain a written affirmative action program only for contracts in accordance with § 265.13(c) of this part.

(4) A recipient or contractor shall not procure supplies or services in less than usual quantities or in a manner which is intended to have the effect of avoiding the applicability of this paragraph.

§ 265.13 Contents of affirmative action program.

(a) *General.* A prerequisite to the development of a satisfactory affirmative action program is the identification and analysis of problem areas inherent in minority employment and utilization of MBEs, and an evaluation of opportunities for utilization of minority group personnel and MBEs. Therefore, an affirmative action program to guarantee employment and contractual opportunities shall provide for specific actions keyed to the problems and needs of minority persons and MBEs including, where there are deficiencies based on past practices, and with respect to future plans for hiring and promoting employees or awarding contracts, the development of specific goals and timetables for the prompt achievement and maintenance of full opportunities for minority persons and MBEs with respect to programs, projects and activities subject to this part.

(b) *Employment practices.* (1) The affirmative action program for employment showing the level of utilization of minority employees, and establishing a plan to insure representative opportunities for employment for minority persons shall be developed in accordance with the regulations of the Department of Labor at 41 CFR 60–2.

(2) Railroad applicants or recipients shall develop their program for each establishment in their organization and by job categories in accordance with the requirements of the Joint Reporting Committee of the Equal Employment Opportunity Commission and the Department of Labor. Other applicants, recipients or contractors may use any program format or organization which has been approved for use by other Federal agencies enforcing equal opportunity laws.

(3) The affirmative action program shall show the source of statistical data used.

(4) The affirmative action program shall include a listing by job category of all jobs which may be established or filled by the applicant, recipient or contractor as a result of the project, program or activity funded by federal financial assistance under the Rail Acts for the first five years of such project, program or activity or the period during which such project, program or activity will be undertaken, whichever is the lesser (''program period'').

(5) The affirmative action program shall set forth in detail a plan to insure that with respect to the project, program or activity financed in whole or in part through financial assistance under the Rail Acts, minority persons have an opportunity to participate in employment in proportion to the percentage of the minority work force in the area where the applicant's, recipient's or contractor's operations are located as compared to the total work force, and that such minority persons have an equal opportunity for promotion or upgrading. Where appropriate because of prior underutilization of minority employees, the program shall establish specific goals and timetables to utilize minority employees in such projects, programs or activities in the above-mentioned proportion.

(c) *Contracts.* (1) The affirmative action program shall include details of proposed contracts in excess of $10,000 to be awarded in connection with projects, programs and activities funded in whole or in part through financial

assistance under the Rail Acts, including contracts for professional and financial services, for the program period. The details shall include a description of the services or products which will be sought including estimated quantities, the location where the services are to be provided, the manner in which proposals will be solicited (e.g., cost plus fixed fee, fixed price), the manner in which contracts will be awarded (e.g., competitive or sole source). The plan shall also give details as to bidding procedures, and information as to other qualifications for doing business with the applicant, recipient or contractor. Upon request by the applicant, recipient or contractor, any information submitted to the Administrator shall be kept confidential to the extent permitted by law.

(2) The affirmative action program shall review the procurement practices of the applicant, recipient or contractor for the full year preceding the date of the submission of the affirmative action program and evaluate the utilization of MBE in its procurement activities. Such evaluation of utilization of MBEs shall include the following:

(i) An analysis of awards of contracts to MBEs during such year describing the nature of goods and services purchased and the dollar amount involved; and

(ii) A comparison of the percentage of awards of contracts to MBEs (by number of contracts and by total dollar amount involved) to the total procurement activity of the applicant, recipient or contractor for said year.

(3) The affirmative action program shall set forth in detail applicant's, recipient's or contractor's plan to insure that MBEs are afforded a fair and representative opportunity to do business with applicant, recipient or contractor (both in terms of number of contracts and dollar amount involved) for the program period. Such plan shall identify specific actions to be taken to:

(i) Designate a liaison officer who will administer the MBE program;

(ii) Provide for adequate and timely consideration of the availability and potential of MBEs in all procurement decisions;

(iii) Assure that MBEs will have an equitable opportunity to compete for contracts, by arranging solicitation time for the preparation of bids, quantities, specifications, and delivery schedules so as to facilitate the participation of MBEs and by assisting MBEs who are potential contractors in preparing bid materials and in obtaining and maintaining suitable bonding coverage in those instances where bonds are required;

(iv) Maintain records showing that the policies set forth in this part are being complied with;

(v) Submit quarterly reports of the records referred to in paragraph (c)(3)(iv) of this section in such form and manner as the Administrator may prescribe; and

(vi) Where appropriate because of prior underutilization of MBEs, establish specific goals and timetables to utilize MBEs in the performance of contracts awarded.

(d) *Successor organizations.* Where applicant, recipient or contractor is a successor organization, its affirmative action program shall review the hiring and procurement practices of its predecessor organization or organizations.

§ 265.14 Determining the MBE status of a business.

FRA or a recipient may, on the basis of available information, determine that a business is not an MBE within the meaning of this part. This determination shall be final, except as provided in § 265.14–1, for that contract and other contracts being let by that contracting agency at the time of the determination. Businesses may correct deficiencies in their ownership and control and apply as MBEs only for future contracts.

[44 FR 36339, June 21, 1979]

§ 265.14–1 Appeals of determination of MBE status.

(a) *Filing.* Any firm who believes that it has been wrongly determined not to be an MBE under § 265.14 by the FRA or a recipient may file an appeal in writing with the Administrator. The appeal shall be filed no later than 30 days after the date of the determination. The Administrator may extend the time for filing or waive the time limit in the interest of justice, specifying in writing the reasons for so doing. Third

parties who have reason to believe that a business has been wrongly denied or granted status as an MBE may advise the Administrator. This information is not considered an appeal pursuant to this section.

(b) *Decision to investigate.* The Administrator ensures that a prompt investigation is made of those cases with investigative merit (except those being reviewed on the merits by the Comptroller General), pursuant to prescribed DOT Title VI (49 CFR part 21) investigation procedures.

(c) *Status during the investigation.* The Administrator may deny the business in question eligibility to participate as an MBE in direct or FRA-assisted contracts let during the pendancy of the investigation, after providing the business in question an opportunity to show cause by written statement to the Administrator why this should not occur.

(d) *Cooperation in investigation.* All parties shall cooperate fully with the investigation. Failure or refusal to furnish relevant information or other failure to cooperate is a violation of this part.

(e) *Determinations.* The Administrator will make one of the following determinations and so inform the business in writing of the reasons for the determination:

(1) The business is considered to be an MBE within the meaning of this part; or

(2) The business is not considered to be an MBE within the meaning of this part and is denied eligibility to participate as an MBE in any direct or FRA-assisted contract until a further determination is made by FRA that the business is an MBE within the meaning of this part.

[44 FR 36339, June 21, 1979]

§ 265.15 Implementation and maintenance of affirmative action program.

The affirmative action program with respect to employment and procurement practices shall set forth in detail applicant's recipient's or contractor's program to implement and maintain its recommended action program to insure that persons and businesses are not discriminated against because of race, color, national origin or sex, and that minorities and MBEs have equal employment and contractual opportunities with applicant, recipient or contractor. In developing its maintenance program for employment, applicants, recipients and contractors shall follow the applicable regulations of the Department of Labor implementing Executive Order 11246 at 41 CFR 60–2, subpart C, which provisions may also be helpful in implementing and maintaining applicant's recipient's or contractor's procurement program.

§ 265.17 Review of affirmative action program.

(a) Except as provided for contractors and subcontractors in §265.11(b), each affirmative action program to be acceptable must have the written approval of the Administrator.

(b) The Administrator recognizes that there may be some exceptional situations where the requirements of § 265.13 through § 265.15 may not fulfill the affirmative action objectives sought or that those objectives may be better achieved through modified or different requirements. Accordingly, the applicant, recipient or contractor may request approval for modified or different requirements that embody the objectives of §§ 265.13 through 265.15. Such a request must include detailed showings that the particular situation is exceptional and that the modified or different proposals substantially comply with the objectives of this part. If the Administrator determines that the requirements for a detailed justification have been met, he may waive or modify these requirements or impose different requirements as he deems necessary to further the objectives sought herein.

Subpart C—Compliance

§ 265.19 Compliance information.

(a) Each recipient and contractor shall keep such records and submit to the Administrator complete and accurate reports, at such times, and in such form, and containing such information as the Administrator may determine to be necessary to enable him to ascertain whether the recipient or contractor has complied or is complying with this

part. These records shall show in connection with the project, program or activity funded in whole or in part through financial assistance under the Rail Acts:

(1) Procedures which have been adopted to comply with the policies set forth in this part, including the establishment of a source list of MBEs;

(2) Specific efforts to identify and award contracts to MBEs; and

(3) Awards to MBEs on the source list required in paragraph (a)(1) of this section.

(b) Each recipient and contractor shall permit access by the Administrator during normal business hours to such of its books, records, accounts and other sources of information and its facilities as may in the opinion of the Administrator be necessary to ascertain compliance with this part.

(c) Each recipient and contractor shall make available to participants, beneficiaries and other interested persons, such information regarding the provisions of this part and the applicability to the program, project or activity under which the recipient received financial assistance from the Rail Acts or under which the contractor is awarded a contract and make such information available to them in such manner as the Administrator finds necessary to apprise such persons of the protections against discrimination assured them by the Act and this part.

§265.21 Conduct of investigations.

(a) The Administrator shall from time to time review the practices of recipients and contractors to determine whether they are complying with this part. The Administrator shall to the fullest extent practicable seek the cooperation of recipients and contractors in obtaining compliance with this part and shall provide assistance and guidance to recipients and contractors to help them comply voluntarily with this part. As required by §265.7(a)(6) of this part recipients and contractors shall from time to time review the practices of their contractors and subcontractors to determine whether they are complying with this part.

(b) Any person who believes himself or herself or any other person to be subjected to discrimination prohibited by this part, may file with the Administrator a written complaint. A complaint must be filed not later than sixty (60) days after the date complainant discovers the alleged discrimination, unless the time for filing is extended by the Administrator.

(c) The Administrator will make a prompt investigation in cases where a compliance review, report, complaint or other information indicates a possible failure to comply with this part.

(d)(1) If an investigation pursuant to paragraph (c) of this section indicates a failure to comply with this part, the Administrator shall within ten (10) days after such determination so inform the recipient or contractor in writing of the specific grounds for alleging noncompliance and the matter shall be resolved by informal means whenever possible. The notice shall provide that, if it has been determined that the matter is not resolved by informal means within thirty (30) days after the delivery of the notice, action will be taken as provided for in §265.23.

(2) If an investigation does not warrant action pursuant to paragraph (d)(1) of this section, the Administrator shall within ten (10) days after such determination so inform the recipient, or contractor and the complainant, if any, in writing.

(e) No recipient, contractor or other person shall intimidate, threaten, coerce or discriminate against any individual for the purpose of interfering with any right or privilege secured by section 905 of the Act or this part, or because he or she made a complaint, testified, assisted or participated in any manner in an investigation, proceeding or hearing under this part. The identity of complainants shall be kept confidential at their election during the conduct of any investigation, proceeding or hearing under this part. But when such confidentiality is likely to hinder the investigation the complainant will be advised for the purpose of waiving the privilege.

§265.23 Procedures for effecting compliance.

(a) Whenever the Administrator determines that any recipient, or contractor has failed to comply with the provisions of this part, or with any

Federal civil rights statute, or with any order or regulation issued under such a statute, and such failure has not been resolved by informal means pursuant to § 265.21 of this part, the Administrator shall within ten (10) days after such determination notify such recipient or contractor, and the appropriate labor organization if the matter may appear to affect a person who is covered by a collective bargaining agreement, in writing of the specific grounds for alleging noncompliance, and the right of such persons to respond to such determination in writing or to request an informal hearing. Where the Administrator determines that substantial noncompliance exists and it is unlikely that compliance will be obtained, or that lack of good faith exists, or that other good cause exists, he may order that further financial assistance be suspended in whole or in part pending a final decision in the matter. Subject to the provisions of paragraphs (b) through (e) of this section, the recipient or contractor shall have sixty (60) days from the date of delivery of the notice within which to comply. The recipient or contractor may be entitled to additional time if it is demonstrated that compliance is not possible within the sixty day period and that the necessary initial curative actions were undertaken promptly and have been diligently prosecuted toward completion. The Administrator shall specify the last day upon which curative action must be completed to his satisfaction. Unless the Administrator determines that compliance cannot be reasonably attained, failure to take curative action shall be grounds for the Administrator to:

(1) Direct that no further Federal financial assistance be provided to the recipient;

(2) Refer the matter to the Attorney General with a recommendation that an appropriate civil action be instituted;

(3) Exercise the powers and functions provided by title VI of the Civil Rights Act of 1964 (42 U.S.C. 2000d *et seq.);* or

(4) Take such other actions as may be provided by law or this part.

(b) Persons receiving notification and a directive pursuant to paragraph (a) of this section may within thirty (30) days after receipt respond to the notice in writing in lieu of requesting an informal hearing as specified in paragraph (c) of this section. The Administrator will make a determination as to compliance within thirty (30) days after receipt of such written response, and advise the person in writing of his determination. If the Administrator determines that compliance is reasonably attainable and that such person has failed to comply with the provisions of this part or with his determination within 30 days after receipt of his determination, the Administrator shall pursue the remedies set forth in the last sentence of paragraph (a) of this section.

(c) Persons receiving notification and a directive pursuant to paragraph (a) of this section may within ten (10) days after receipt request an informal hearing in lieu of filing a written response as specified in paragraph (b) of this section. The Administrator may, in his discretion, grant a request for an informal hearing for the purpose of inquiring into the status of compliance of such person. The Administrator will advise persons subject to his directive in writing as to the time and place of the informal hearings and may direct such persons to bring specific documents and records, or furnish other relevant information concerning their compliance status. When so requested, such person shall attend and bring the requested information. The time and place so fixed shall be reasonable and shall be subject to change for cause. The complainant, if any, shall be advised of the time and place of the hearing. The failure of such person to request a hearing or to appear at a hearing for which a date has been set shall be deemed to be a consent to the applicability of the procedures set forth in paragraph (a) of this section.

(d) The hearing shall be conducted by a hearing officer appointed by the Administrator. Such hearings shall commence within twenty (20) days from the date the hearing is granted and shall be concluded no later than thirty (30) days from the commencement date. Parties to informal hearings may be represented by counsel or other authorized

representative and shall have a fair opportunity to present any relevant material. Formal rules of evidence will not apply to such proceedings.

(e) *Decisions and notices.* (1) Within ten (10) days after the conclusion of such hearings, the hearing officer will advise the Administrator, in writing, of his views and recommendations as to compliance with this part and a copy of such decision shall be sent by registered mail, return receipt requested, to the recipient or contractor and participating labor organization. If the hearing officer in his decision determines that the recipient or contractor is in noncompliance with this part, he may, if he determines that it is unlikely that compliance will be obtained, or that a lack of good faith exists, or for other good cause, order that further financial assistance be suspended in whole or in part, pending a decision by the Administrator in the matter.

(2) The recipient, contractor or labor organization may file exceptions to the hearing officer's decision, with his reasons therefor, with the Administrator within thirty (30) days of receipt of the initial decision. Within twenty (20) days, after the time for filing exceptions, the Administrator shall determine, in writing, whether or not the parties involved are in compliance with this part. A copy of the Administrator's decision will be given to the recipient, contractor, labor organization, if appropriate, and to the complainant, if any.

(3) If the Administrator determines that compliance can reasonably be attained, his decision shall provide that if such person fails or refuses to comply with the decision of the Administrator within thirty (30) days after receipt of the decision, the Administrator shall:

(i) Direct that no further Federal assistance be provided to such a person;

(ii) Refer the matter to the Attorney General with a recommendation that an appropriate civil action be instituted;

(iii) Exercise the powers and functions provided by title VI of the Civil Rights Act of 1964; and/or

(iv) Take such other actions as may be provided by law or this part.

(4) A recipient or contractor adversely affected by a decision of the Administrator issued under paragraph (a) or (b) of this section shall be restored to full eligibility to receive Federal assistance or award of a federally assisted contract if the recipient or contractor takes complete curative action to eliminate the noncompliance with this part and if the recipient or contractor provides reasonable assurance that the recipient or contractor will fully comply with this part.

§ 265.25 Other information.

(a) Each person required to submit a written affirmative action program pursuant to this part shall include as an appendix thereto, the following information except to the extent such information is already provided as part of the application for financial assistance;

(1) A brief description of other pending applications to other federal agencies for financial assistance, and of federal assistance being provided at the time of submission of the affirmative action program;

(2) A statement of any civil rights compliance reviews regarding applicant or recipient conducted in the two year period before the application, or affirmative action program; the name of the agency or organization performing the review, and the findings of the review;

(3) Where the project, program or activity receiving financial assistance will require the relocation of persons and businesses, a description of the requirements and steps used or proposed to guard against unnecessary impact on persons on the basis of race, color, or national origin;

(4) Where the project, program or activity receiving financial assistance will result in the construction of new facilities or expansion of existing facilities, a description of the requirements and steps used or proposed to guard against unnecessary impact on persons on the basis of race, color or national origin;

(5) Where paragraphs (a) (3) and (4) of this section are applicable, additional data such as demographic maps, racial composition of affected neighborhoods, or census data should be provided

where necessary or appropriate to evaluate the impact of projects, programs and activities referred to in paragraphs (a) (3) and (4) of this section.

APPENDIX A TO PART 265

The following are the financial assistance programs to which this part applies:

(a) *Railroad Revitalization and Regulatory Reform Act of 1976,* (1) purchase of redeemable preference shares or trustee certificates pursuant to section 505;

(2) Guarantee of obligations, the proceeds of which will be used to acquire, or rehabilitate or improve rail facilities, or equipment, pursuant to section 511; and

(3) Grants and contracts made to implement the Northeast Corridor project under section 704.

(b) *Regional Rail Reorganization Act of 1973, as amended,* (1) loans made by the United States Railway Association (USRA) pursuant to section 211;

(2) Purchase of securities of the Consolidated Rail Corporation pursuant to section 216; and

(3) Grants to States, or local or regional authorities for rail continuation assistance under section 402.

(c) *Department of Transportation Act,* (1) grants to States for rail freight assistance programs under section 5 (sec. 803 of the Railroad Revitalization and Regulatory Reform Act of 1976); and

(2) Grants under section 4(i) for the planning, preservation and conversion of rail passenger terminals of historical or architectural significance.

(d) *Rail Passenger Service Act,* (1) grants to Amtrak under section 601.

PART 266—ASSISTANCE TO STATES FOR LOCAL RAIL SERVICE UNDER SECTION 5 OF THE DEPARTMENT OF TRANSPORTATION ACT

Sec.

266.1 Definitions.
266.3 Rail Service Assistance Program.
266.5 State eligibility.
266.7 Project eligibility.
266.9 Federal/State share.
266.11 Allowable costs.
266.13 Distribution of funds.
266.15 Requirements for State Rail Plan.
266.17 Applications.
266.19 Environmental impact.
266.21 Grant agreement and disbursement.
266.23 Record, audit, and examination.
266.25 Waivers and modifications.

AUTHORITY: Sec. 5 of the Department of Transportation Act (49 U.S.C. 1654), as amended by the Local Rail Service Assistance Act of 1978, Pub. L. 95–607, 92 Stat. 3059.

SOURCE: 44 FR 51129, Aug. 30, 1979, unless otherwise noted.

§ 266.1 Definitions.

As used in this part:

Acquisition assistance means funds granted to a State under section 5(f)(2) of the Department of Transportation Act (49 U.S.C. 1654(f)(2)) to cover the cost of acquiring by purchase, lease, or in such other manner as the State considers appropriate, a line of railroad or other rail properties, or any interest therein for existing or future rail freight service.

Act means the Department of Transportation Act (49 U.S.C. 1650 *et seq.*).

Administrator means the Administrator of the Federal Railroad Administration or the Administrator's delegate.

Cash means an outlay of funds.

Commission means the Interstate Commerce Commission or any successor Federal agency to the relevant activity.

Common carrier means a person providing railroad transportation for compensation who is subject to the jurisdiction of the Commission under subchapter I of chapter 105 of title 49 of the U.S.C.

Designated State Agency means the State agency designated under section 5(j)(2) of the Act (49 U.S.C. 1654(j)(2)).

Entitlement means the amount of assistance which a State is eligible to receive annually under section 5(h) of the Act (49 U.S.C. 1654(h)).

Equipment means rolling stock of the kind generally used by American railroads in revenue freight service.

Facilities means track, ties, roadbed and related structures including terminals, team tracks and appurtenances, bridges and tunnels, and other structures used or usable for rail service operations.

FRA means the Federal Railroad Administration.

Federal Share means the contribution by the Administrator under section 5(g) of the Act (49 U.S.C. 1654(g)) to a State's rail service assistance program.

Final System Plan means the plan approved by the Congress under section

208 of the Regional Rail Reorganization Act of 1973 (45 U.S.C. 718).

Gross ton miles per mile means the combined weight of locomotives and all trailing cars and their contents used in revenue freight trains multiplied by the number of route miles traveled and divided by the number of route miles of the line.

Line means a line of railroad.

Maintenance means inspection and light repairs, emergency repairs and a planned program of periodic maintenance which is necessary to keep a line at its existing condition or to comply with FRA Class 1 Safety Standards.

Planning assistance means funds granted to a State under section 5(i) of the Act (49 U.S.C. 1654(i)) to meet the cost of establishing (including developing a planning application), implementing, revising, and updating the State Rail Plan required by section 5(j) of the Act (49 U.S.C. 1654(j)).

Planning Work Program means that portion of a State's planning application which outlines the State's plan for establishing, implementing, revising, or updating a State Rail Plan which meets the requirements of section 5(i) of the Act, (49 U.S.C. 1654(i)).

Program operation assistance means funds granted to a State to cover those administrative costs allowable under Federal Management Circular 74–4.

Rail Act means the Regional Rail Reorganization Act of 1973 (45 U.S.C. 701 *et seq.*).

Rail banking means the acquisition of an interest in a rail right-of-way sufficient to ensure its preservation for future rail freight service.

Rail facility construction assistance means funds granted to a State under section 5(f)(5) of the Act (49 U.S.C. 1654(f)(5)) to cover the cost of constructing rail or rail related facilities (including new connections between two or more existing lines, intermodal freight terminals, sidings, and relocation of existing lines) for the purpose of improving the quality and efficiency of rail freight service.

Rail service continuation assistance means funds granted to a State under section 5(f)(1) of the Act (49 U.S.C. 1654(f)(1)) to cover rail service continuation payments for the difference between the revenue attributable to a line of railroad and the avoidable costs of providing rail service on that line, together with a reasonable return on the value of the line and other rail properties related to that line, all as determined in accordance with 49 CFR part 1121 with the following exceptions:

(1) Where service was eligible to be subsidized under section 402(c)(2) (A) and (B) of the Rail Act, rail service continuation assistance means funds for payments determined in accordance with 49 CFR part 1125; and

(2) Where service was eligible to be subsidized under section 402(c)(2)(C) of the Rail Act, rail service continuation assistance means funds for payments calculated, to the greatest extent possible, in a manner consistent with 49 CFR part 1121.

Rehabilitation or improvement assistance means funds granted to a State under section 5(f)(3) of the Act (49 U.S.C. 1654(f)(3)) to cover the cost of replacing or upgrading, to the extent necessary to permit adequate and efficient rail freight service, facilities needed to provide service on a line.

Relocation costs means actual expenses directly incurred in moving shippers from a line to a new location.

State means any State or the District of Columbia in which a common carrier maintains any line.

State Rail Plan means the current plan, including all updates, revisions, and amendments required by section 5(j)(1) of the Act (49 U.S.C. 1654(j)(1)).

Substitute service assistance means funds granted to a State under section 5(f)(4) of the Act (49 U.S.C. 1654(f)(4)) to cover the cost of reducing the costs of lost rail service in a manner less expensive than continuing rail service and includes (but is not limited to) the acquisition, construction, or improvement of facilities for the provision of substitute freight transportation services and relocation costs.

§266.3 Rail Service Assistance Program.

(a) *Scope of the program.* The Rail Service Assistance Program includes:

(1) Rail service continuation assistance;

(2) Acquisition assistance;

(3) Rehabilitation or improvement assistance;

(4) Substitute service assistance;

(5) Rail facility construction assistance;

(6) Planning assistance; and

(7) Program operations assistance.

(b) *Special limitations on planning assistance and program operation assistance.* (1) A State is eligible to receive up to $100,000, or 5 percent of its entitlement, whichever is greater, as planning assistance; and

(2) A State is eligible to receive up to 5 percent of the total amount of funds granted to it each fiscal year under paragraphs (a)(1) to (5) of this section as program operation assistance.

§ 266.5 State eligibility.

(a) *General eligibility requirements under the rail service assistance program.* A State is eligible for assistance if:

(1) The State has certified pursuant to section 5(j)(4) of the Act that it has or will adopt and maintain adequate procedures for financial control, accounting and performance evaluation in order to assure proper use of Federal funds;

(2) For purpose of establishing a State Rail Plan, the State has submitted, in accordance with § 266.17(e) of this part, a planning application; and

(3) For any other assistance,

(i) The State has established an adequate plan for rail services in the State which (A) meets the requirements of § 266.15 of this part; (B) is part of an overall planning process for all transportation services in the State; (C) includes a suitable procedure for updating, revising, and amending such plan; and (D) as updated, revised, or amended has been approved by the Administrator;

(ii) Such State Rail Plan (A) is administered or coordinated by a designated State agency; (B) provides for the equitable distribution of resources; and (C) includes a methodology for determining the ratio of benefits to costs of projects for which acquisition assistance, rehabilitation or improvement assistance, substitute service assistance, and rail facility construction assistance is sought;

(iii) The State agency:

(A) Has authority and administrative jurisdiction to develop, promote, supervise, and support safe, adequate, and efficient rail transportation services;

(B) Employs or will employ, directly or indirectly, sufficient trained and qualified personnel;

(C) Maintains or will maintain adequate programs of investigation, research, promotion, and development with provision for public participation; and

(D) Is designated and directed solely or in cooperation with other State agencies to take all practicable steps to improve transportation safety and to reduce transportation-related energy utilization and pollution; and

(iv) The State undertakes to immediately notify the Administrator of any changes in conditions which might affect its compliance with this section.

§ 266.7 Project eligibility.

(a) *Rail service continuation assistance, acquisition assistance and substitute service assistance.* A project is eligible for assistance under § 266.3(a) (1), (2), and (4) of this part, respectively, if:

(1) The Commission pursuant to 49 U.S.C. 10903 has found since February 5, 1976, that the public convenience and necessity permit the abandonment and discontinuance of rail service on the line related to the project, except that any such line or related project eligible prior to October 1, 1978, is eligible only until September 30, 1981 and any such line eligible for rail service continuation assistance shall receive such assistance for no more than 36 months after October 1, 1978;

(2) The line related to the project was eligible for assistance under section 402 of the Rail Act (45 U.S.C. 762), except that any such line or related project is eligible only until September 30, 1981; or

(3) For purposes of acquisition assistance, the line related to the project is listed for possible inclusion in a rail bank in Part III, Section C of the Final System Plan.

(b) *Rehabilitation and improvement assistance and rail facility construction assistance.* A project is eligible for assistance under § 266.3(a) (3) and (5) of this part, respectively, if:

(1)(i) The Commission has not made a finding that the public convenience and necessity would require or permit

abandonment or discontinuance of rail service on the line related to the project;

(ii) Any pending application for a certificate of abandonment or discontinuance of rail service on the line related to the project is withdrawn within a reasonable period (as determined by the Administrator) following the execution of the grant agreement and before Federal funds are disbursed for the project; and

(iii)(A) The line related to the project is certified by the railroad as having carried three million gross ton miles per mile or less during the prior year; or

(B) The line related to the project is certified by the railroad in a written statement which identifies the name of the line, the State or States in which it is located, its length, termini, and termini mile posts as having carried between three and five million gross ton miles per mile during the prior year, and the Administrator has determined that the project is consistent with proposals made under the authority of subsections 5 (a) through (e) of the Act (49 U.S.C. 1654 (a)–(e));

(2)(i) An application for a certificate of abandonment or discontinuance of rail service on the line related to the project has been filed with the Commission during the period February 5, 1976 through December 31, 1978, whether or not such application has been granted; or

(ii) During the period February 5, 1976, through December 31, 1978, the Commission has found that the public convenience and necessity would require or permit abandonment or discontinuance of rail service on the line related to the project irrespective of when the application was filed;

(3) The line related to the project is listed for possible inclusion in a rail bank in Part III, Section C of the Final System Plan; or

(4) The line related to the project was eligible to be acquired under section 402(c)(3) of the Rail Act (45 U.S.C. 762(c)(3)).

(c) Projects eligible under paragraphs (b)(2), (b)(3), and (b)(4), of this section are eligible only until September 30, 1981. Projects initially eligible under paragraph (b)(2) of this section, may subsequently become eligible under paragraph (b)(1) of this section, if the Commission issues a new certificate of public convenience and necessity with respect to the line related to the project.

§266.9 Federal/State share.

(a) *Federal share.* The Federal share of allowable costs under the Rail Service Assistance Program is 80 percent, with the exception that the Federal share of payments to be covered by rail service continuation assistance shall be 70 percent for any third twelve month period which begins on or after October 1, 1980 that such assistance is provided.

(b) *State share–general.* The State share of allowable costs under the Rail Service Assistance Program shall be provided either in cash or through eligible in-kind benefits which would not otherwise have been provided. When more than the required State share is provided during the Federal fiscal year beginning October 1, 1978, or thereafter, the amount in excess of the required State share may be carried forward to subsequent fiscal years. The State share of allowable costs under the Rail Service Assistance Program may not be satisfied directly or indirectly by any Federal funds unless the funds are provided through a Federal program which specifically authorizes the use of such funds to satisfy the non-Federal share of a Federally subsidized program.

(c) *In-kind benefits*—(1) *Eligible types of benefits and their valuation.* The following types of in-kind benefits are eligible when they are provided for projects eligible under §266.7 of this part (whether or not Federal assistance is requested for the projects) or they are activities which would be eligible for planning and program operation assistance. Eligible in-kind benefits are valued as follows:

(i) The value of forgiven taxes, such as those portions of gross receipts or revenue taxes which are applicable to an approved project or property taxes on project related property, shall be the amount which would otherwise have been levied by the taxing authority. Forgiveness may be through exemption or remission;

(ii) The value of trackage rights secured by a State for a common carrier shall be the amount paid by railroads for comparable rights on comparable rail freight properties;

(iii) The value of State salaries for State public employees working in the State Rail Service Assistance Program, shall be consistent with rates paid for similar work by state public employees working in comparable state programs but shall not include overhead or general administrative costs;

(iv) The value of donations by the State or by a third party on behalf of the State of real property or tangible personal property of the kind necessary for safe and efficient operation of rail freight service, such as State or locally owned or leased buildings used in rail freight operations or equipment or materials, shall be determined as follows:

(A) The value of State tangible personal property shall be established at the State's actual cost in accordance with Federal Management Circular 74–4;

(B) The value of donated tangible personal property shall be determined in accordance with Attachment F of Office of Management and Budget Circular (OMB) A–102;

(C) The value of State real property shall be established at the State's actual cost in accordance with Federal Management Circular 74–4, if at least one independent appraisal based on the results of a title search was performed when the property was purchased by the State, otherwise it shall be valued at the fair market value as established by at least one independent appraisal based on the results of a title search at the time the state proposes to make the property available as in-kind benefit; and

(D) The value of donated real property shall be its fair market value, at the time of donation to the State, as established by at least one independent appraisal based on the results of a title search;

(2) *Eligibility criteria.* To be applied toward the State share, in-kind benefits must:

(i) Be verifiable from the State's records;

(ii) Be necessary and reasonable for proper and efficient accomplishment of the objectives of the Rail Service Assistance Program;

(iii) Be provided for in the approved grant budget; and

(iv) Be approved under paragraph (3) of this paragraph (c).

(v) The State shall submit such information as the Administrator may request to verify the value of in-kind benefits.

(3) *Request for approval.* A request for approval of the in-kind benefits are to be applied and shall include the following:

(i) Full name and principal business address of the contributor if other than grantee;

(ii) Detailed documentation of the in-kind benefits including identification of the kind of in-kind benefits to be provided as well as their estimated value. When in-kind benefits are to be provided by a third party, a copy of the executed agreement between the State and the third party; and

(iii) Certification by the State that the contribution will be used solely for the purposes documented.

§ 266.11 Allowable costs.

Allowable costs include only the following costs which are properly allocable to the work performed: Planning and program operation costs which are allowed under Federal Management Circular 74–4; and costs of projects eligible under § 266.7 of this part. All allowable costs shall be authorized by a fully executed grant agreement. A State may incur costs prior to the execution of a grant agreement only if the Administrator, based on the State's demonstration of a compelling need to incur costs prior to the execution of a grant agreement, has authorized the costs in writing prior to their incurrence by the State.

§ 266.13 Distribution of funds.

(a) *Formula.* Funds appropriated for or reallocated in any fiscal year (in this section refered to jointly as ''funds'') are to be distributed to each State as follows:

(1) Two-thirds of the funds will be allocated in the ratio which a State's rail mileage that, in accordance with 49 U.S.C. 10904(d), is either potentially

subject to abandonment or is to become the subject of an application for a certificate of abandonment or discontinuance which a carrier plans to submit, but has not yet submitted, bears to the total such rail mileage in all the States;

(2) One-third of the funds will be allocated in the ratio which a State's rail mileage for which the Commission has found within three years prior to the first day of the fiscal year for which the funds are being allocated that the public convenience and necessity permits the abandonment, or the discontinuance, of rail service on such rail mileage, bears to the total such rail mileage in all the States. Until September 30, 1981, such rail mileage includes the rail mileage which was eligible under the Rail Service Assistance Program pursuant to section 402 of the Rail Act, and all rail mileage which, prior to October 1, 1978, had been included for formula allocation purposes. The Administrator will calculate rail mileage under this paragraph as of October 1 of each year; and

(3) The above calculations will be adjusted if necessary so that no State receives less than 1 percent of the funds appropriated for a fiscal year.

(b) *Reallocation.* The Administrator will reallocate among the States funds which have not been granted under an executed grant agreement by the end of the fiscal year for which the funds were appropriated and funds determined by a Federal audit to be in excess of allowable costs when they have not been granted under an executed grant agreement by the end of the fiscal year in which the Federal audit is made. Reallocated funds are distributed in accordance with the allocation formula described in paragraph (a) of this section.

(c) *Interstate sharing of allocated funds.* Where not in violation of State law, two or more States, which are eligible to receive assistance under the Rail Service Assistance Program pursuant to §266.5 of this part may combine any portion of their entitlements for purposes of conducting any eligible project of mutual benefit provided that they enter into an agreement for this purpose.

§266.15 Requirements for State Rail Plan.

(a) *State planning process.* The State Rail Plan shall be based on a comprehensive, coordinated and continuing planning process for all transportation services within the State and shall be developed with an opportunity for participation by persons interested in rail activity in the State and adjacent States where appropriate. At a minimum, the State shall hold a public hearing if, on the basis of reasonable public notice appearing in the press, there is sufficient public interest to justify a hearing. Public notice shall be given, in accordance with applicable State law and practice concerning comparable matters, that a draft of the State Rail Plan is available for public inspection at a reasonable time in advance of the hearing. The State shall enable local and regional governmental bodies to review and comment on appropriate elements of the State Rail Plan. Provisions shall also be made for updating, revising, and amending the State Rail Plan.

(b) *Format of the State Rail Plan.* Each item submitted in response to a requirement of this section shall reference that requirement by subsection, paragraph, and subparagraph.

(c) *Contents of the State Rail Plan.* Each State Rail Plan shall:

(1) Specify the objectives of the State's Rail Service Assistance Program and explain how the implementation of the State Rail Plan will accomplish these objectives and explain relevant data sources, assumptions, analytical methodology, other legal constraints and special problems or conditions which will aid the public in understanding the State Rail Plan;

(2) Contain an illustration of the State's entire rail system on suitable scale maps of the State highway system (such as a reduction of the County Highway Planning Series of maps), designating with respect to each line listed under subparagraph (3) of this subsection, including all lines connecting to them:

(i) The operating carrier or carriers;

(ii) Freight traffic density, and

(iii) Location of passenger service.

These maps shall be accompanied by a written description of the service provided on each line;

(3) Identify the following classes of rail service within the State:

(i) Lines in the State which are eligible for assistance under § 266.7 of this part other than those included in paragraph (c)(3)(ii) of this section;

(ii) Lines in the State which a common carrier has identified on its system diagram map submitted under 49 CFR 1121.20(b) (1) and (2) as potentially subject to abandonment and lines which are anticipated to be the subject of an abandonment or discontinuance application within three years following the date of submission;

(iii) [Reserved]

(iv) Lines in the State for which abandonment or discontinuance applications are pending;

(v) Lines in the State which are involved in the following kinds of proposals that have been submitted to the Commission for approval or are in the process of negotiation, to the extent that this information is publicly available:

(A) Mergers;

(B) Consolidations;

(C) Reorganizations;

(D) Purchases by other common carriers; or

(E) Other unification and coordination projects.

(vi) Rail projects for which the State plans to request Federal assistance or approval as in-kind benefits; and

(vii) Rail projects for which a State provides or plans to provide assistance from sources other than the Rail Service Assistance Program, including the estimated cost of the projects;

(4) Establish and describe screening criteria to be used in selecting the eligible lines which the State analyzes in detail, identify these lines, and explain how the application of the screening criteria resulted in their selection;

(5) Describe the State's methodology for determining the ratio of benefits to the costs of proposed projects eligible under § 266.7 of this part (except projects to be funded with rail service continuation assistance);

(6) Include, to the extent that the information is available to the State, the following data for each line the State has selected to analyze in detail:

(i) Annual freight tonnage and carloads segregated by commodity type and indicating any seasonal traffic fluctuations and the number of shippers and receivers on the line aggregated by type (e.g., grain elevator, power plant, heavy manufacturing), including identification of information which a shipper wishes the Administrator to consider confidential to the extent permitted by law;

(ii) Revenues and costs of providing rail freight service on the line;

(iii) Condition of the related rail facilities and equipment, and for a line eligible under § 266.7(b) of this part, a description of the particular rail facilities involved in any project a State may be considering on the line;

(iv) When the State is considering a line for rail service continuation assistance, projections of freight traffic needs on the line for at least the three succeeding calendar years and estimates of the amount and type of equipment, the condition of the rail facilities, and the level of service necessary to satisfy the projected traffic needs as well as estimates of the revenue and costs of providing this service; and

(v) When the State is considering a project eligible under § 266.7(b) of this part, the amount of funds expended for the maintenance of the line and the kinds of work performed during the five year period preceding its eligibility.

(vi) When the State is considering a line for rail banking, a description of the line's future economic potential, such as the existence of fossil fuel reserves or agricultural production likely to be served;

(7) Describe the alternatives which the State will analyze in applying the methodology described in paragraph (c)(5) of this section, such as: Rail service continuation payments, rehabilitation or improvement, acquisition, rail facility construction, potential for moving freight by alternate modes, or abandonment or discontinuance of rail freight service;

(8) Apply the methodology described in paragraph (c)(5) of this section to each line the State has selected to analyze in detail;

(9) Specify the State's decision regarding the alternative selected for each line the State has analyzed in detail and include the following:

(i) An indication of whether Federal assistance will be requested or other funds will be used to implement the alternative selected;

(ii) An identification of lines which may be affected by the alternative selected;

(iii) An explanation of how the alternative selected contributes to the accomplishment of the State's objectives as stated in paragraph (c)(1) of this section; and

(iv) A statement of the projected future of the line after the alternative selected is implemented and the line is no longer eligible for rail service continuation assistance under § 266.7(a) of this part or after the payback period used in the State's benefit-cost analysis, whichever is appropriate;

(10) Describe the planning process participation of local and regional governmental bodies, the railroads, railroad labor, rail service users, and the public in general;

(11) Describe the overall planning process for all transportation services in the State; and

(11A) Indicate how the overall planning process in the State addresses the need to improve national energy efficiency, reduce the national use of petroleum and natural gas, and increase the national use of coal.

(12) Include a program of projects which identifies the projects for which the State expects to submit applications and the anticipated submission date. The program shall group the proposed projects in the order they comply with the State's criteria and goals for assistance, and shall:

(i) Identify the type of project (i.e., rail service continuation payments, acquisition, rehabilitation or improvement, rail facility construction, or substitute service), its location, and duration; and

(ii) Include the anticipated amount of funds to be requested for each project:

(d) *Updates, revisions, and amendments of the State Rail Plan*—(1) *General.* As provided for in paragraph (e) of this section, State Rail Plans shall be updated at least on an annual basis but may be revised more frequently at the discretion of the State in accordance with its program needs. Such updates shall be subject to the same review, public participation and approval procedures by the State and FRA as the original State Rail Plan.

(2) *Contents.* Annual updates shall include the following:

(i) A response to unanswered FRA comments on previously submitted updates, revisions, amendments, or the original State Rail Plan;

(ii) An update of information in previous submittals which is no longer accurate as a result of plan implementation, action by a governmental entity or railroad, or changed conditions;

(iii) For lines receiving rail service continuation assistance, inclusion of revenue and cost information from the past year's operating experience and a reevaluation of service based on these new data;

(iv) Updating of the maps and descriptions required under paragraph (c)(2) of this section;

(v) Analysis of any new projects developed by the State in accordance with paragraphs (c)(4), (5) and (6) of this section;

(vi) Changes in agency responsibilities and authority including ability to provide the non-Federal share; and

(vii) Revisions in the State's policies, objectives or long-range expectations.

(e) *Adoption and submission of State Rail Plan and annual updates.* An original and five copies of the State Rail Plan, and any amendments, revisions, or updates shall be submitted to FRA for review and approval with a certification by the Governor, or by the Governor's delegate, that the submission constitutes the State Rail Plan established by the State as provided in section 5(j) of the Act. The State Rail plan, and all amendments, revisions, and updates shall be submitted to the FRA through the appropriate Federal Highway Division Office. A current list of mailing addresses of the above offices will be provided by FRA to each State.

(f) *Review of the State Rail Plan and Updates.* The State Rail Plan and all amendments, revisions, and updates shall analyze in accordance with this

section all projects for which the State anticipates requesting rail service assistance, other than planning assistance, during the fiscal year. In accordance with § 266.17(b) of this part, a project for which funds are requested must have been addressed in a previously approved State Rail Plan or update. If the Administrator determines that the State Rail Plan or update is not in accordance with this part, the Administrator will notify the State in writing setting forth the Administrator's reasons for such a determination.

[44 FR 51129, Aug. 30, 1979, as amended at 45 FR 58038, Aug. 29, 1980; 48 FR 29274, June 24, 1983]

§ 266.17 Applications.

(a) *General.* (1) Applications for planning assistance shall comply with paragraphs (b), (c) and (e) of this section.

(2) Applications for rail service continuation assistance shall comply with paragraphs (b), (c), (d) and (f) of this section.

(3) Applications for acquisition assistance shall comply with paragraphs (b), (c), (d) and (g) of this section.

(4) Applications for rehabilitation or improvement assistance and rail facility construction assistance shall comply with paragraphs (b), (c), (d) and (h) of this section.

(5) Applications for substitute service assistance shall comply with paragraphs (b), (c), (d) and (i) of this section.

(b) *Submission.* (1) Applications shall be submitted by the designated State agency using the standard forms contained in Attachment M of Office of Management and Budget Circular No. A–102 (''OMB Circular A–102''). Each item submitted in response to a requirement of this section shall reference that requirement by subsection, paragraph, and subparagraph. Each application shall be consistent with the current State Rail Plan and analyzed in it.

(2) A State may apply for planning assistance to cover prospective costs at any time during the planning process.

(3) Exhibits previously filed with the Administrator need not be refiled unless the prior filing has been rendered obsolete by changed circumstances. Such prior filing shall be appropriately referenced by source, location of data and date of submittal.

(c) *Contents.* Each application shall include:

(1) Full name and principal business address of the applicant;

(2) Name, title, address and phone number of the person to whom correspondence regarding the application should be addressed;

(3) Budget estimates for the total amount of assistance required for projects or planning;

(4) Applicant's proposed means of furnishing its share of the total costs of the projects, as well as copies of executed agreements between the agency and any third party which may be providing the non-Federal share or a portion thereof;

(5) Assurance by the chief executive officer of the applicant that the Federal funds provided under the Act will be used solely for the purpose for which the assistance will be provided and in conformity with limitations on expenditures under the Act and applicable regulations;

(6) Evidence that the applicant has established in accordance with Attachment G of OMB Circular A–102, adequate procedures for financial control, accounting and performance evaluation in order to assure proper use of the Federal funds;

(7) Assurance by applicant's chief executive officer that the timing of all advances by the applicant will comply with the Department of Treasury advance financing regulations (31 CFR part 205);

(8) Statement as to whether the applicant prefers to receive disbursement of Federal funds by advance payment or reimbursement;

(9) Opinion of applicant's legal counsel showing that counsel is familiar with the corporate or other organizational powers of the applicant, that the applicant is authorized to make the application, that the applicant is eligible to participate in the Rail Service Assistance Program in accordance with the provisions of the Act and this part, and that the applicant has the requisite authority to carry out actions proposed in the application and to assume the responsibilities and obligations created thereby;

(10) Assurances that the applicant will comply with and that the program will be conducted in accordance with the following Federal laws, policies, regulations and pertinent directives:

(i) Title VI of the Civil Rights Act of 1964, 42 U.S.C. 2000d *et seq.*, and 49 CFR part 21;

(ii) Section 905 of the Railroad Revitalization and Regulatory Reform Act of 1976, 45 U.S.C. 803, and 49 CFR part 265;

(iii) The Rehabilitation Act of 1973, 29 U.S.C. 794 and 49 CFR part 27 (44 FR 31442, May 31, 1979) relating to non-discrimination on the basis of handicap; and

(iv) The State and Local Fiscal Assistance Act of 1972, 31 U.S.C. 1221 *et seq.* and 31 CFR part 51; and

(11) When two or more States desire to combine their entitlements or any portion of them for the purpose of funding a project, certification of the Governor or the Governor's delegate of each State involved that it is a party to an interstate agreement as required under section 5(h)(4) of the Act (49 U.S.C. 1654(h)(4)). Such certification shall include the amount of money to be used from each State's entitlement and which State is to enter into a grant for the project.

(d) *Additional contents.* In addition to meeting the requirements of paragraphs (b) and (c) of this section each application except when planning assistance is requested, shall include evidence that the agency submitting the application has the statutory authority and administrative jurisdiction to develop, promote, supervise and support safe, adequate, and efficient rail services; that it employs or will employ, directly or indirectly, sufficient trained and qualified personnel; that it maintains or will maintain adequate programs of investigation, research, promotion, and development with provision for public participation; and that it is designated and directed solely, or in cooperation with other State agencies, to take all practicable steps to improve transportation safety and to reduce transportation related energy utilization and pollution.

(e) *Planning assistance.* In addition to meeting the requirements of paragraphs (b) and (c) of this section, each application for planning assistance shall include a Planning Work Program which, together with such other information the State may choose to submit, demonstrates to the satisfaction of the Administrator that the State's proposed use of planning assistance will produce a State Rail Plan, or an update, amendment or revision which meets the requirements of § 266.15 of this part. The Planning Work Program shall include the following information:

(1) An explanation of how the State Rail Plan will be related to the overall planning process for transportation within the State. This explanation shall concentrate on the expectations of the State for the future of local rail freight services and consider such factors as likelihood of profitability of existing rail lines, necessity of rail service continuation payments, State acquisition of rail lines, use of alternate modes of transportaion in lieu of rail freight service, and other long-term alternatives;

(2) A description of the methods by which the State will involve local and regional governmental bodies and the public generally in its rail planning process, including its methods of providing for equitable distribution of resources;

(3) An identification of the data to be obtained on the rail network and rail services in the State, the sources of this data, and the methodology to be employed in the collection of the data;

(4) A description of the method by which the State will develop the State Rail Plan, including a brief description of discrete tasks or activities to be accomplished; and

(5) A list of the individuals responsible for the planning, a work schedule and a budget.

(f) *Rail service continuation assistance.* In addition to meeting the requirements of paragraphs (b), (c), and (d) of this section, each application for rail service continuation assistance shall include the following:

(1) The amount of the estimated rail service continuation payment for each line; and

(2) A description of the arrangements which the applicant has made for operation of the rail services to be subsidized including copies of the proposed operating agreements, leases, or other compensation agreements under which service is to be provided, and the results of the application's preaward audit of proposed operators and equipment leasing companies if the equipment to be used in providing the rail service is to be leased by the proposed operator.

(g) *Acquisition assistance.* In addition to meeting the requirements of paragraphs (b), (c), and (d) of this section, each application for acquisition assistance shall include the following:

(1) Copies of the results of a title search, and the basis for the proposed acquisition price including two independent valuation appraisals by qualified appraisers. Such appraisals shall be performed in accordance with the ''Uniform Appraisal Standards for Federal Land Acquisition'' proposed by the Interagency Land Acquisition Conference and shall be based on the results of a title search and comparable sales and shall take cognizance of all easements, encumbrances and restrictions that may affect the value of the property. Such appraisals shall be reviewed by a State Review appraiser to establish just compensation;

(2) Written assurance that the acquisition is being undertaken in accordance with 49 CFR 25.253, 25.255, 25.257, and 25.259 to the greatest extent practicable under State law and fully in compliance with 49 CFR 25.261(a) and 25.263;

(3) Written assurance that the owner of the property to be acquired has been advised of the requirements of 49 CFR 25.259 or will be advised of such requirements prior to the consummation of the acquisition;

(4) A description of the necessary steps, and timing for completion of the acquisition;

(5) When rail service is to be immediately provided over the line, a description of the arrangements which the applicant has made for operation of the rail service, including copies of the proposed operating agreements, leases, and other compensation agreements under which the service is to be provided, and a description of the means by which the State will continue rail service on the property to be acquired once assistance under the Act is terminated;

(6) For applications regarding rail banking, evidence that the properties for which assistance is requested have potential for rail freight service such as plans for agricultural development or existence of fossil fuel reserves, the State's anticipated timetable for returning the line to service, and its proposed use of the property while it is out of service including its maintenance plans; and

(7) Evidence that the anticipated benefits and costs of the proposed acquisition have been analyzed in accordance with the methodology established by the State under § 266.15(c)(5) of this part.

(h) *Rehabilitation or improvement assistance and rail facility construction assistance.* (1) In addition to meeting the requirements of paragraphs (b), (c), and (d) of this section, each application for rehabilitation or improvement assistance and rail facility construction assistance shall include the following:

(i) A detailed estimate of the materials and labor required to complete the work, the total estimated costs of the work, the estimated numbers and kinds of ties and other material, the milepost termini involved, and a schedule for completion of the work;

(ii) Evidence that the anticipated benefits and costs of the proposed acquisition have been analyzed in accordance with the methodology established by the State under § 266.15(c)(5) of this part;

(iii) When rehabilitation assistance is requested—

(A) A copy of the document by which funds will be granted or loaned (at an interest rate determined by the State) to the owner of the rail properties or the operator of the rail service related to the project; and

(B) An assurance by the chief executive officer of the applicant that:

(*1*) Repaid loan funds and interest accumulated with respect to such funds will not be loaned or granted without the prior written approval of the Administrator;

(*2*) The Federal share of repaid loan funds will be placed in an interest-bearing account or with the prior written approval of the Administrator will be deposited by the borrower, for the benefit and use of the State, in a bank which has been designated by the Secretary of Treasury in accordance with 12 U.S.C. 265; and

(*3*) If the rehabilitated or improved facilities are not used for rail freight service during the useful life of the improvement the Federal share of the fair market value of the improvement or facility will be placed in an interest-bearing account or with the prior written approval of the Administrator will be deposited by the owner of the rail properties, for the benefit and use of the State, in a bank which has been designated by the Secretary of the Treasury in accordance with 12 U.S.C. 265;

(iv) An assurance by chief executive officer of the applicant that rehabilitated or improved facilities or newly constructed facilities will be maintained to prevent deterioration below the speed at which the line could be operated upon completion of the project during the period of time established as the payback period in the benefit-cost analysis of the project;

(2) In addition to meeting the requirements of paragraphs (b), (c), and (d) and (h)(1) of this section, each application for a project eligible under § 266.7(b)(2)(i) (if the Commission has made a finding granting the application for abandonment and discontinuance) (ii), (3) or (4) shall also include the following:

(i) An indication of which of the following methods will be used to complete the work, including proposed contracts unless the work will be performed under method (A):

(A) On an actual cost basis by the operator or the applicant;

(B) By contracting for the work in accordance with Attachment O to OMB Circular A–102; or

(C) Under an existing continuing contract between the operator and another firm provided that the applicant can demonstrate the the costs are comparable to those under paragraph (h)(2)(i) (A) or (B) of this section; and

(ii) A description of the plans for inspection of the work including identification and qualifications of the staff to be responsible for the inspection and a proposed schedule of inspections; and

(iii) A description of the arrangements made for the operation of rail service over the property including copies of the proposed operating agreements, leases or other compensation agreements under which service is to be provided, and the proposed method of financing the operation of such rail service;

(3) In addition to meeting the requirements of paragraphs (b), (c), (d), and (h)(1) of this section, each application for a project eligible under § 266.7 (b)(1) or (2)(i) (if the Commission has not made a finding granting the application for abandonment discontinuance) shall include an assurance by the common carrier which operates service on or owns the line related to the project that if an application for a certificate of abandonment or discontinuance has been filed with the Commission the application will be withdrawn within a reasonable period following execution of a grant agreement and before Federal funds are disbursed for the project; and

(4) When rail facility construction assistance is requested an assurance by the chief executive officer of the applicant that if the facility is abandoned, sold, or converted to non-rail freight use during its useful life, FRA will be compensated an amount computed by applying FRA's participation in the cost of constructing the facility to the fair market value of the facility at the time it is abandoned, sold, or converted to non-rail use.

(i) *Substitute service assistance.* In addition to meeting the requirements of paragraphs (b), (c), and (d) of this section, each application for substitute service assistance shall include:

(1) A detailed description of the substitute service project, including evidence that the cost and scope of the project are limited to that necessary to replace the rail service being discontinued;

(2) Evidence that the anticipated benefits and costs of the proposed

acquistion have been analyzed in accordance with the methodology established by the State under § 266.15(c)(5) of this part;

(3) For construction or improvement of fixed facilities, a description of the proposed work, including:

(i) The cost and timing of the work; and

(ii) An assurance by the chief executive officer of the applicant that the Federal share of the project will be repaid in accordance with Attachment N of OMB Circular A–102, if the properties are not used for rail freight service during the useful life of the project properties;

(4) For relocation costs, the following assurances by the chief executive officer of the applicant:

(i) When the rail line related to the project is eligible under section 5(k)(4)(A) of the Act (49 U.S.C. 1654(k)(4)(A)), an assurance that the applicant is requesting only such assistance as is needed to relocate the shippers which were receiving rail service on the line at the time the Commission found that the public convenience and necessity would permit discontinuance or abandonment of the rail service;

(ii) When the rail line related to the project is eligible under section 5(k)(4)(B) of the Act (49 U.S.C. 1654(k)(4)(B)), an assurance that assistance is being requested to relocate only the shippers who received rail service on the line as of April 1, 1976; and

(iii) An assurance, and the basis therefor, that the shippers will not be relocated to a line with respect to which an application for a certificate of abandonment or discontinuance has been filed with the Commission or that if an application has been filed it will be withdrawn within a reasonable period following execution of a grant agreement and before Federal funds are disbursed for the project;

(5) An assurance by the chief executive officer of the applicant that after completion of the substitute service project, additional Federal assistance will not be requested for the continuation of the rail freight service that the substitute service is designed to replace, unless the Administrator determines that circumstances have changed so that continuation of rail freight service is more cost-effective than continued use of the substitute service project;

(6) A description of the arrangements made for operation of service where rail service is to be provided in conjunction with a substitute service project, including copies of proposed operating agreements, leases, or other compensation agreements under which service is to be provided; and

(7) An assurance by the chief executive officer of the applicant that assistance provided will not be used to pay the non-Federal share under any Federal program.

(j) *Execution and filing of applications.* (1) Each original application shall bear the date of execution and be signed by the chief executive officer of the agency submitting the application;

(2) Each application for planning assistance, and two (2) copies thereof, shall be filed with the Administrator through the appropriate Federal Highway Administration Division Office;

(3) Each application (excluding requests for planning assistance), and two (2) copies thereof, shall be filed with the Administrator through the appropriate Regional Director of Federal Assistance. A current list of the appropriate mailing addresses of the above officials will be provided by FRA to each State.

§ 266.19 Environmental impact.

(a) *General.* The Administrator has determined that providing assistance to cover the following costs is not a major action significantly affecting the quality of the human environment: Rehabilitation or improvement consisting of work normally performed on a periodic basis which does not change the existing character of the facility (including work to overcome normal periodic maintenance that had been deferred) rail service continuation, acquisition, and planning.

(b) *Substitute service assistance, rail facility construction assistance, and non-exempt rehabilitation or improvement assistance*—(1) *Environmental assessment.* (i) When an applicant requests substitute service assistance, rail facility construction assistance, or rehabilitation or improvement assistance (except for

rehabilitation or improvement assistance which is exempt under paragraph (a) of this section), the applicant shall:

(A) Prepare an environmental assessment to determine whether the future use of the property will significantly affect the quality of the human environment; or

(B) Provide sufficient documentation to enable the Administrator to determine that the project satisfies the following criteria:

(*1*) The action is not likely to be environmentally controversial from the point of view of people living within the environment affected by the action or controversial with respect to the availability of adequate relocation housing;

(*2*) The action is not inconsistent with any Federal, State, or local law, regulation, ordinance, or judicial or administrative determination relating to environmental protection;

(*3*) The action will not have any significant adverse impact in any natural, cultural, recreational, or scenic environment(s) in which the action takes place, or on the air or water quality or ambient noise levels of such environment(s);

(*4*) The action will not: use 4(f)-protected properties; adversely affect properties under section 106 of the National Historic Preservation Act; involve new construction location in a wetlands area; or affect a base floodplain;

(*5*) The action will not cause a significant short- or long-term increase in traffic congestion, or other significant adverse environmental impact on any mode of transportation;

(*6*) The action is not an integral part of a program of actions which, when considered separately, would not be classified as major FRA actions, but when considered together would be so classified; and

(*7*) Environmental assessment or documentation is not required by any Federal law, regulation, guideline, order, or judicial or administrative determination other than this part.

(ii) Prior to submitting an application, FRA recommends that the applicant seek the Administrator's advice as to form and substance of the assessment for the project under consideration. The environmental assessment shall utilize an interdisciplinary approach in identifying the type, degree of effect, and probability of occurrence of primary, secondary and cumulative potential environmental impacts (positive and negative) of the proposed action and of alternative courses of action. The depth of coverage shall be consistent with the magnitude of the project and its expected environmental effects. The environmental assessment and all documents used as a basis for the assessment shall be submitted together with the application for assistance.

(2) *Environmental impact statement.* A draft environmental impact statement (EIS) shall be submitted with each application when the environmental assessment concludes that the future use significantly affects the quality of human environment. FRA recommends that prior to submitting the application, the applicant seek the Administrator's advice as to form and substance of the EIS for the project under consideration.

(3) *Finding of no significant impact.* A draft finding of no significant impact declaration shall be submitted with each application when the applicant's environmental assessment concludes that the figure use does not significantly affect the quality of the human environment. The finding of no significant impact shall include a description of the project, and sufficient data and environmental findings to support the conclusions as to the impact upon the quality of the human environment. FRA recommends that prior to submitting the application, the applicant seek the Administrator's advice as to the form and substance of this finding for the project under consideration.

(4) *Section 4(f) determination.* For projects involving the use of any land from a public park, recreation area, wildlife and waterfowl refuge, or historic site of national, State or local significance as determined by the Federal, State, or local officials having jurisdiction thereon, information to support a determination pursuant to section 4(f) of the Act shall be submitted together with the application. The section 4(f) determination shall document that:

(i) There is no feasible and prudent alternative to the use of such land; and

(ii) The project includes all planning to minimize harm resulting from such use.

(5) *Historic preservation.* For projects involving the use of historic, cultural or archeological resources listed or eligible for listing in the National Register of Historic Places, information which documents that the Advisory Council on Historic Preservation has been afforded an opportunity for review and comment on the proposed project in accordance with 16 U.S.C. 470 and 36 CFR part 800 shall be submitted with the application.

(c) *Highway or highway-related facilities.* Substitute service projects involving highway or highway-related facilities are subject to the applicable substantive Federal Highway Administration regulations on environmental considerations (23 CFR part 771).

§ 266.21 Grant agreement and disbursement.

(a) *Grant agreement.* (1) Upon the approval of an application meeting the requirements of § 266.17 of this part, a grant agreement for the Federal share of the approved amount of estimated program costs will be executed by the Administrator and the grantee.

(2) The grant agreement will identify the amount of the grantee's share of program costs to be furnished in cash and through approved in-kind benefits. The grantee shall expend a pro-rata share of its cash contribution at the same time payments of the Federal share are made available to the grantee.

(b) *Disbursement.* (1) Federal funds are provided either in advance by a letter-of-credit or a Treasury check or by reimbursement in accordance with Attachment J of OMB Circular A–102.

(2) Prior to receipt of advance payments, the grantee must have demonstrated to the satisfaction of the Administrator that it has established procedures to comply with OMB Circular A–102, Attachment J, including procedures that will minimize the time elapsing between the receipt of funds by the grantee and their disbursement. Evidence of such compliance shall be provided to the Administrator at least 30 days prior to the anticipated date of receipt of advance payments. An advance by letter-of-credit is used when the rail service assistance is expected to be provided for a minimum of one (1) year, and is expected to involve annual payments aggregating at least $120,000. Otherwise, advance payments are made by Treasury check.

(3) If the grantee is not eligible for advance payments or does not desire them, the grantee will be reimbursed for eligible expenditures at the end of each fiscal quarter upon submission of a request for reimbursement.

(4) Before disbursement of Federal funds can be made to a grantee for payment to third parties under this subsection, the grantee must have executed an agreement with the third party.

(5) Acquisition assistance will be disbursed only after the following have been approved by the Administrator:

(i) A title opinion of the chief legal officer of the grantee that describe the type of title being acquired, and if a general warranty deed is not being given, it must explain why it could not be given. The opinion shall also advise of any need for use of the State's eminent domain powers to assure adequate title. In addition, the opinion shall explain how the defects disclosed by the title search might affect the marketability of the property;

(ii) A written determination that the property acquired is limited to the land and facilities that are needed for the rail freight services which would have been curtailed or abandoned but for the acquistion has been accepted by the Administrator; and

(iii) A written determination that the purchase price is consistent with the value of the property interest being acquired, and the evidence upon which the determination is based.

(c) *Settlement.* (1) Settlement under the grant agreement is made on the basis of a Federal audit which has determined the allowable costs over the entire term of the grant agreement. If the Federal audit determines that the allowable costs under the grant agreement are less than the amount of the grant, the difference shall be refunded to FRA at the end of the fiscal year in which the audit was made unless it has

become the subject of another executed grant agreement. Upon termination of a State's participation in the Rail Service Assistance Program, the State shall repay FRA the Federal share of any unused rehabilitation and improvement assistance and any accumulated interest.

§266.23 Record, audit, and examination.

(a) Retention and custodial requirements for financial records, supporting documents, statistical records, and all other records pertinent to a grant provided under this part shall be governed by Attachment C of OMB Circular A–102.

(b) The Administrator and the Comptroller General of the United States or any of their duly authorized representatives shall, until the expiration of three years after submission to the Administrator of the grantee's final accounting of all program funds, and for any longer period necessary to resolve audit findings, have access for the purpose of audit and examination to any books, documents, papers, and records which in the opinion of the Administrator or the Comptroller General of the United States may be related or pertinent to the grants, contracts, or other arrangements arising out of, or in any way connected with, the rail service assistance program.

§266.25 Waivers and modifications.

The Administrator may, with respect to individual requests, upon good cause shown, waive or modify any requirement of this part not required by law or make any additional requirements the Administrator deems necessary. Procedures for submission and consideration of petitions for waiver or modification are governed by 49 CFR part 211.

CHAPTER III—FEDERAL HIGHWAY ADMINISTRATION, DEPARTMENT OF TRANSPORTATION

EDITORIAL NOTE: For nomenclature changes to chapter III see 59 FR 60323, Nov. 23, 1994, and 60 FR 38742, July 28, 1995.

SUBCHAPTER A—GENERAL REGULATIONS

Part		*Page*
301	Organization and delegation of powers and duties of the Federal Highway Administration	517
325	Compliance with interstate motor carrier noise emission standards	517

SUBCHAPTER B—FEDERAL MOTOR CARRIER SAFETY REGULATIONS

350	Commercial motor carrier safety assistance program	529
355	Compatibility of state laws and regulations affecting interstate motor carrier operations	540
356	Motor carrier routing regulations	543
365	Rules governing applications for operating authority	544
366	Designation of process agent	551
367	Standards for registration with states	552
368	Applications for certificates of registration by foreign motor carriers and foreign motor private carriers under 49 U.S.C. 13902(c)	557
370	Principles and practices for the investigation and voluntary disposition of loss and damage claims and processing salvage	559
371	Brokers of property	561
372	Exemptions, commercial zones, and terminal areas	563
373	Receipts and bills	576
374	Passenger carrier regulations	578
375	Transportation of household goods in interstate or foreign commerce	585
376	Lease and interchange of vehicles	597
377	Payment of transportation charges	604

Part
378 Procedures governing the processing, investigation, and disposition of overcharge, duplicate payment, or overcollection claims 608
379 Preservation of records 611
382 Controlled substances and alcohol use and testing 615
383 Commercial driver's license standards; requirements and penalties 635
384 State compliance with commercial driver's license program 659
385 Safety fitness procedures 665
386 Rules of practice for motor carrier safety and hazardous materials proceedings 677
387 Minimum levels of financial responsibility for motor carriers 696
388 Cooperative agreements with states 719
389 Rulemaking procedures—Federal motor carrier safety regulations 721
390 Federal motor carrier safety regulations; general .. 724
391 Qualifications of drivers 736
392 Driving of commercial motor vehicles 756
393 Parts and accessories necessary for safe operation 765
394 [Reserved]
395 Hours of service of drivers 833
396 Inspection, repair, and maintenance 844
397 Transportation of hazardous materials; driving and parking rules 849
398 Transportation of migrant workers 866
399 Employee safety and health standards 873

APPENDIX A TO SUBCHAPTER B [RESERVED]

APPENDIX B TO SUBCHAPTER B—SPECIAL AGENTS 876

APPENDIXES C–D TO SUBCHAPTER B [RESERVED]

APPENDIX F TO SUBCHAPTER B—COMMERCIAL ZONES 877

APPENDIX G TO SUBCHAPTER B—MINIMUM PERIODIC INSPECTION STANDARDS 895

SUBCHAPTER A—GENERAL REGULATIONS

PART 301—ORGANIZATION AND DELEGATION OF POWERS AND DUTIES OF THE FEDERAL HIGHWAY ADMINISTRATION

Sec.
301.50 Regional offices; general description.
301.52 Jurisdiction of regional offices.

AUTHORITY: 49 U.S.C. 104, 307, 501 *et seq.*, 1801 *et seq.*, 3101 *et seq.*, 10925, 10927 note; 42 U.S.C. 4917; 49 CFR 1.48.

§ 301.50 Regional offices; general description.

The Federal Highway Administration has regional offices, commonly referred to as Regional Administrations, which are numerically identified as Regions 1 and 3 through 10. Each regional office has jurisdiction over a geographical area consisting of a designated group of States. Each regional office is headed by a Regional Federal Highway Administrator (commonly called the Regional Administrator for ease of reference), who is assisted by a regional headquarters staff of legal, administrative, and program specialists, and who is responsible for directing at local levels the Federal Highway Administration responsibilities for administration of the direct Federal, Federal-aid, and other highway and traffic safety programs.

[51 FR 12620, Apr. 14, 1986]

§ 301.52 Jurisdiction of regional offices.

The specific composition of each Federal Highway Administration region is as follows:

Region No.	Territory included	Location of regional office
1[1]	Connecticut, Maine, Massachusetts, New Hampshire, New Jersey, New York, Puerto Rico, Rhode Island, and Vermont.	4 Normanskill Blvd., Delmar, NY 12054.
3	Delaware, District of Columbia, Maryland, Pennsylvania, Virginia, and West Virginia.	31 Hopkins Plaza, Baltimore, MD 21201.
4	Alabama, Florida, Georgia, Kentucky, Mississippi, North Carolina, South Carolina, and Tennessee.	1720 Peachtree Rd. NW., Atlanta, GA 30309.
5	Illinois, Indiana, Michigan, Minnesota, Ohio, and Wisconsin.	18209 Dixie Highway, Homewood, IL 60430.
6	Arkansas, Louisiana, New Mexico, Oklahoma, and Texas.	819 Taylor St., Fort Worth, TX 76102.
7	Iowa, Kansas, Missouri, and Nebraska.	Post Office Box 7186, Country Club Station, Kansas City, MO 64113.
8	Colorado, Montana, North Dakota, South Dakota, Utah, and Wyoming.	Room 242, Bldg. 40, Denver Federal Center, Denver, CO 80225.
9	Arizona, California, Hawaii, and Nevada.	450 Golden Gate Ave., San Francisco, CA 94102.
10	Alaska, Idaho, Oregon, and Washington.	222 Southwest Morrison St., Portland, OR 97204.

[1] Conforms to Standard Federal Regions 1 and 2.

[38 FR 215, Jan. 7, 1972]

PART 325—COMPLIANCE WITH INTERSTATE MOTOR CARRIER NOISE EMISSION STANDARDS

Subpart A—General Provisions

Sec.
325.1 Scope of the rules in this part.
325.3 Effective date.
325.5 Definitions.
325.7 Allowable noise levels.
325.9 Measurement tolerances.

Subpart B—Administrative Provisions

325.11 Issuance, amendment, and revocation of the rules in this part.
325.13 Inspection and examination of motor vehicles.

Subpart C—Instrumentation

325.21 Scope of the rules in this subpart.
325.23 Types of measurement systems which may be used.
325.25 Calibration of measurement systems.
325.27 Use of a windscreen.

Subpart D—Measurement of Noise Emissions; Highway Operations

325.31 Scope of the rules in this subpart.
325.33 Site characteristics; highway operations.

325.35 Ambient conditions; highway operations.
325.37 Location and operation of sound level measurement system; highway operations.
325.39 Measurement procedure; highway operations.

Subpart E—Measurement of Noise Emissions; Stationary Test

325.51 Scope of the rules in this subpart.
325.53 Site characteristics; stationary test.
325.55 Ambient conditions; stationary test.
325.57 Location and operation of sound level measurement systems; stationary test.
325.59 Measurement procedure; stationary test.

Subpart F—Correction Factors

325.71 Scope of the rules in this subpart.
325.73 Microphone distance correction factors.
325.75 Ground surface correction factors.
325.77 Computation of open site requirements—nonstandard sites.
325.79 Application of correction factors.

Subpart G—Exhaust Systems and Tires

325.91 Exhaust systems.
325.93 Tires.

AUTHORITY: Sec. 18, 86 Stat. 1234, 1249–1250 (42 U.S.C. 4917).

SOURCE: 40 FR 42437, Sept. 12, 1975, unless otherwise noted.

Subpart A—General Provisions

§ 325.1 Scope of the rules in this part.

(a) The rules in this part prescribe procedures for inspection, surveillance, and measurement of motor vehicles and motor vehicle equipment operated by motor carriers to determine whether those vehicles and that equipment conform to the Interstate Motor Carrier Noise Emission Standards of the Environmental Protection Agency, 40 CFR part 202.

(b) Except as provided in paragraph (c) of this section, the rules in this part apply to motor carriers engaged in interstate commerce. The rules apply at any time or under any condition of highway grade, load, acceleration or deceleration.

(c) The rules in this part do not apply to—

(1) A motor vehicle that has a Gross Vehicle Weight Rating (GVWR) of 10,000 pounds (4,536 kg.) or less;

(2) A combination of motor vehicles that has a Gross Combination Weight Rating (GCWR) of 10,000 pounds (4,536 kg.) or less;

(3) The sound generated by a warning device, such as a horn or siren, installed in a motor vehicle, unless such device is intentionally sounded in order to preclude an otherwise valid noise emission measurement;

(4) An emergency motor vehicle, such as a fire engine, an ambulance, a police van, or a rescue van, when it is responding to an emergency call;

(5) A snow plow in operation; or

(6) The sound generated by auxiliary equipment which is normally operated only when the motor vehicle on which it is installed is stopped or is operating at a speed of 5 miles per hour (8 kph) or less, unless such device is intentionally operated at speeds greater than 5 mph (8 kph) in order to preclude an otherwise valid noise measurement. Examples of that type of auxiliary equipment include, but are not limited to, cranes, asphalt, spreaders, ditch diggers, liquid or slurry pumps, auxiliary air compressors, welders, and trash compactors.

§ 325.3 Effective date.

The rules in this part are effective on October 15, 1975.

§ 325.5 Definitions.

(a) *Statutory definitions.* All terms defined in the Noise Control Act of 1972 (Pub. L. 92–574, 86 Stat. 1234) are used as they are defined in that Act.

(b) *Definitions in standards.* All terms defined in § 202.10 of the Interstate Motor Carrier Noise Emission Standards, 40 CFR 202.10, are used as they are defined in that section.

(c) *Additional definitions.* (1) *Hard test site* means any test site having the ground surface covered with concrete, asphalt, packed dirt, gravel, or similar reflective material for more than ½ the distance between the microphone target point and the microphone location point.

(2) *Soft test site* means any test site having the ground surface covered with grass, other ground cover, or similar absorptive material for ½ or more of the distance between the microphone

target point and the microphone location point.

(3) *Ground cover* means any of various low, dense-growing plants, such as ivy, myrtle, low weeds, or brush.

(4) *Traffic railing* means any longitudinal highway traffic barrier system installed along the side or median of a highway. For the purpose of this part, a traffic railing must have at least 35 percent of its vertical height, from the ground surface to the top of the railing, open to free space in order to qualify as an acceptable object within a noise measurement test site. Further, for the purposes of this part, posts or other discrete supports shall be ignored when ascertaining open free space.

(5) *Relatively flat* when used to describe a noise measurement site means a site which does not contain significant concave curvatures or slope reversals that may result in the focusing of sound waves toward the microphone location point.

§ 325.7 Allowable noise levels.

Motor vehicle noise emissions, when measured according to the rules of this part, shall not exceed the values specified in Table 1.

TABLE 1.—MAXIMUM PERMISSIBLE SOUND LEVEL READINGS (DECIBEL (A)) [1, 2]

	Highway operation test				Stationary tests	
	Soft site		Hard Site		Soft site	Hard site
	35 mi/h or less	Above 35 mi/h	35 mi/h or less	Above 35 mi/h		
If the distance between the microphone location point and the microphone target point is—						
31 ft (9.5m) or more but less than 35 ft (10.7m)	87	91	89	93	89	91
35 ft (10.7m) or more but less than 39 ft (11.9m)	86	90	88	92	88	90
39 ft (11.9m) or more but less than 43 ft (13.1m)	85	89	87	91	87	89
43 ft (13.1m) or more but less than 48 ft (14.6m)	84	88	86	90	86	88
48 ft (14.6m) or more but less than 58 ft (17.1m)	83	87	85	89	85	87
58 ft (17.1m) or more but less than 70 ft (21.3m)	82	86	84	88	84	86
70 ft (21.3m) or more but less than 83 ft (25.3m)	81	85	83	87	83	85

[1] The speeds shown refer to measurements taken at sites having speed limits as indicated. These speed limits do not necessarily have to be posted.
[2] This table is based on motor carrier noise emission requirements specified in 40 CFR 202.20 and 40 CFR 202.21.

[40 FR 42437, Sept. 12, 1975, as amended at 54 FR 50385, Dec. 6, 1989]

§ 325.9 Measurement tolerances.

(a) Measurement tolerances will be allowed to take into account the effects of the following factors:

(1) The consensus standard practice of reporting filed sound level measurements to the nearest whole decibel.

(2) Variations resulting from commercial instrument tolerances.

(3) Variations resulting from the topography of the noise measurement site.

(4) Variations resulting from atmospheric conditions such as wind, ambient temperature, and atmospheric pressure.

(5) Variations resulting from reflected sound from small objects allowed within the test site.

(6) The interpretation of the effects of the above cited factors by enforcement personnel.

(b) Measurement tolerances shall not exceed 2 decibels for a given measurement.

Subpart B—Administrative Provisions

§ 325.11 Issuance, amendment, and revocation of the rules in this part.

The procedures specified in part 389 of this chapter for the issuance, amendment, or revocation of the Federal

Motor Carrier Safety Regulations apply to rulemaking proceedings for the issuance, amendment, or revocation of the rules in this part.

§ 325.13 Inspection and examination of motor vehicles.

(a) Any special agent of the Federal Highway Administration (designated in appendix B to subchapter B of this chapter) is authorized to inspect, examine, and test a motor vehicle operated by a motor carrier in accordance with the procedures specified in this part for the purpose of ascertaining whether the motor vehicle and equipment installed on the motor vehicle conforms to the Interstate Motor Carrier Noise Emission Standards of the Environmental Protection Agency, 40 CFR part 202.

(b) A motor carrier, its officers, drivers, agents, and employees must, at any time, submit a motor vehicle used in its operations for inspection, examination, and testing for the purpose of ascertaining whether the motor vehicle and equipment installed on it conforms to the Interstate Motor Carrier Noise Emission Standards of the Environmental Protection Agency, 40 CFR part 202.

(c) *Prescribed inspection report.* Form MCS–141, Noise Level Compliance Check shall be used to record findings from motor vehicles selected for noise emission inspection by authorized employees.

(d) *Motor carrier's disposition of form MCS–141.* (1) The driver of any motor vehicle receiving a Form MCS–141 shall deliver such MCS–141 to the motor carrier operating the vehicle upon his/her arrival at the next terminal or facility of the motor carrier, if such arrival occurs within twenty-four (24) hours. If the driver does not arrive at a terminal or facility of the motor carrier operating the vehicle within twenty-four (24) hours he/she shall immediately mail the Form MCS–141 to the motor carrier. For operating convenience, motor carriers may designate any shop, terminal, facility, or person to which it may instruct its drivers to deliver or forward Form MCS–141. It shall be the sole responsibility of the motor carrier that Form MCS–141 is returned to the Federal Highway Administration, in accordance with the terms prescribed thereon and in paragraphs (d) (2) and (3) of this section. A driver, if himself/herself a motor carrier, shall return Form MCS–141 to the Federal Highway Administration, in accordance with the terms prescribed thereon and in paragraphs (d) (2) and (3) of this section.

(2) Motor carriers shall carefully examine Forms MCS–141. Appropriate corrective action shall be taken on vehicles found to be not in compliance with the requirements of this part.

(3) Motor carriers shall complete the ''Motor Carrier Certification of Action Taken'' on Form MCS–141 in accordance with the terms prescribed thereon. Motor carriers shall return Forms MCS–141 to the Regional Director of Motor Carriers of the Office of Motor Carriers, Federal Highway Administration, at the address indicated upon Form MCS–141 within fifteen (15) days following the date of the vehicle inspection.

[40 FR 42437, Sept. 12, 1975, as amended at 41 FR 10226, Mar. 10, 1976; 54 FR 50385, Dec. 6, 1989; 60 FR 38743, July 28, 1995]

Subpart C—Instrumentation

§ 325.21 Scope of the rules in this subpart.

The rules in this subpart specify criteria for sound level measurement systems which are used to make the sound level measurements specified in subpart D and subpart E of this part.

§ 325.23 Type of measurement systems which may be used.

The sound level measurement system must meet or exceed the requirements of American National Standard Specification for Sound Level Meters (ANSI S1.4–1971), approved April 27, 1971, issued by the American National Standards Institute,[1] throughout the applicable frequency range for either:

(a) A Type 1 sound level meter;

(b) A Type 2 sound level meter; or

(c) A Type S sound level meter which has—

(1) A weighing frequency response;

[1] Copies of the specification may be secured from the American National Standards Institute, 1430 Broadway, New York, New York, 10018.

(2) Fast dynamic characteristics of its indicating instrument; and

(3) A relative response level tolerance consistent with those of either a Type 1 or Type 2 sound level meter, as specified in section 3.2 of ANSI S1.4–1971.

§ 325.25 Calibration of measurement systems.

(a)(1) The sound level measurement system must be calibrated and appropriately adjusted at one or more frequencies in the range from 250 to 1,000 Hz at the beginning of each series of measurements and at intervals of 5–15 minutes thereafter, until it has been determined that the sound level measurement system has not significantly drifted from its calibrated level. Once this fact has been established, calibrations may be made at intervals once every hour. A significant drift shall be considered to have occurred if a 0.3 dB or more excursion is noted from the system's predetermined reference calibration level. In the case of systems using displays with whole decibel increments, the operator may visually judge when the 0.3 dB drift has been met or exceeded.

(2) The sound level measurement system must be checked periodically by its manufacturer, a representative of its manufacturer, or a person of equivalent special competence to verify that its accuracy meets the manufacturer's design criteria.

(b) An acoustical calibrator of the microphone coupler type designed for the sound level measurement system in use shall be used to calibrate the sound level measurement system in accordance with paragraph (a) of this section. The calibration must meet or exceed the accuracy requirements specified in section 5.4.1 of the American National Standard Institute Standard *Methods for Measurements of Sound Pressure Levels* (ANSI S1.13–1971) for field method measurements.

[40 FR 42437, Sept. 12, 1975, as amended at 41 FR 10227, Mar. 10, 1976]

§ 325.27 Use of a windscreen.

A properly installed windscreen, of the type recommended by the manufacturer of the Sound Level Measurement System, shall be used during the time that noise emission measurements are being taken.

Subpart D—Measurement of Noise Emissions; Highway Operations

§ 325.31 Scope of the rules in this subpart.

The rules in this subpart specify conditions and procedures for measurement of the sound level generated by a motor vehicle engaged in a highway operation for the purpose of ascertaining whether the motor vehicle conforms to the Standards for Highway Operations set forth in 40 CFR 202.20.

§ 325.33 Site characteristics; highway operations.

(a) Measurement shall be made at a test site which is adjacent to, and includes a portion of, a traveled lane of a public highway. A microphone target point shall be established on the centerline of the traveled lane of the highway, and a microphone location point shall be established on the ground surface not less than 31 feet (9.5 m) or more than 83 feet (25.3 m) from the microphone target point and on a line that is perpendicular to the centerline of the traveled lane of the highway and that passes through the microphone target point. In the case of a standard test site, the microphone location point is 50 feet (15.2 m) from the microphone target point. Within the test site is a triangular measurement area. A plan view diagram of a standard test site, having an open site within a 50-foot (15.2 m) radius of both the microphone target point and the microphone location point, is shown in Figure 1. Measurements may be made at a test site having smaller or greater dimensions in accordance with the rules in subpart F of this part.

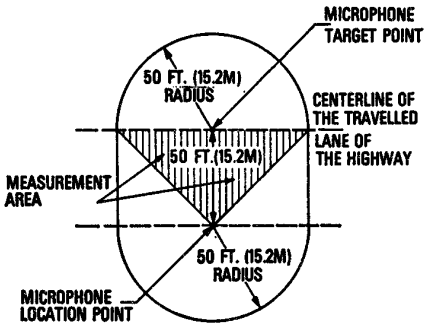

Figure 1
STANDARD TEST SITE;
HIGHWAY OPERATIONS

(b) The test site must be an open site, essentially free of large sound-reflecting objects. However, the following objects may be within the test site, including the triangular measurement area:

(1) Small cylindrical objects such as fire hydrants or telephone or utility poles.

(2) Rural mailboxes.

(3) Traffic railings of any type of construction except solid concrete barriers (see § 325.5(c)(4)).

(4) One or more curbs having a vertical height of 1 foot (.3 m) or less.

(c) The following objects may be within the test site if they are outside of the triangular measurement area of the site:

(1) Any vertical surface (such as billboard), regardless of size, having a lower edge more than 15 feet (4.6 m) higher than the surface of the traveled lane of the highway.

(2) Any uniformly smooth sloping surface slanting away from the highway (such as a rise in grade alongside the highway) with a slope that is less than 45 degrees above the horizontal.

(3) Any surface slanting away from the highway that is 45 degrees or more and not more than 90 degrees above the horizontal, if all points on the surface are more than 15 feet (4.6 m) above the surface of the traveled lane of the highway.

(d) The surface of the ground within the measurement area must be relatively flat (see § 325.5(c)(5)). The site shall be a ''soft'' test site. However, if the site is determined to be ''hard,'' the correction factor specified in § 325.75(a) of this part shall be applied to the measurement.

(e) The traveled lane of the highway within the test site must be dry, paved with relatively smooth concrete or asphalt, and substantially free of—

(1) Holes or other defects which would cause a motor vehicle to emit irregular tire, body, or chassis impact noise; and

(2) Loose material, such as gravel or sand.

(f) The traveled lane of the highway on which the microphone target point is situated must not pass through a tunnel or underpass located within 200 feet (61 m) of that point.

[40 FR 42437, Sept. 12, 1975, as amended at 54 FR 50385, Dec. 6, 1989]

§ 325.35 Ambient conditions; highway operations.

(a)(1) *Sound.* The ambient A-weighted sound level at the microphone location point shall be measured, in the absence of motor vehicle noise emanating from within the clear zone, with fast meter response using a sound level measurement system that conforms to the rules of § 325.23.

(2) The measured ambient level must be 10 dB(A) or more below that level specified in § 325.7, Table 1, which corresponds to the maximum permissible sound level reading which is applicable at the test site at the time of testing.

(b) *Wind.* The wind velocity at the test shall be measured at the beginning of each series of noise measurements and at intervals of 5–15 minutes thereafter until it has been established that the wind velocity is essentially constant. Once this fact has been established, wind velocity measurements may be made at intervals of once every hour. Noise measurements may only be made if the measured wind velocity is 12 mph (19.3 kph) or less. Gust wind measurements of up to 20 mph (33.2 kph) are allowed.

(c) *Precipitation.* Measurements are prohibited under any condition of precipitation, however, measurements may be made with snow on the ground.

The ground surface within the measurement area must be free of standing water.

[40 FR 42437, Sept. 12, 1975, as amended at 41 FR 10227, Mar. 10, 1976; 41 FR 28267, July 9, 1976]

§ 325.37 Location and operation of sound level measurement system; highway operations.

(a) The microphone of a sound level measurement system that conforms to the rules in § 325.23 of this part shall be located at a height of not less than 2 feet (.6 m) nor more than 6 feet (1.8 M) above the plane of the roadway surface and not less than 3½ feet (1.1 m) above the surface on which the microphone stands. The preferred microphone height on flat terrain is 4 feet (1.2 m).

(b)(1) When the sound level measurement system is hand-held or is otherwise monitored by a person located near its microphone, the holder must orient himself/herself relative to the highway in a manner consistent with the recommendation of the manufacturer of the sound level measurement system.

(2) In no case shall the holder or observer be closer than 2 feet (.6 m) from the system's microphone, nor shall he/she locate himself/herself between the microphone and the vehicle being measured.

(c) The microphone of the sound level measurement system shall be oriented toward the traveled lane of the highway at the microphone target point at an angle that is consistent with the recommendation of the system's manufacturer. If the manufacturer of the system does not recommend an angle of orientation for its microphone, the microphone shall be oriented toward the highway at an angle of not less than 70 degrees and not more than perpendicular to the horizontal plane of the traveled lane of the highway at the microphone target point.

(d) The sound level measurement system shall be set to the A-weighting network and ''fast'' meter response mode.

[40 FR 42437, Sept. 12, 1975, as amended at 41 FR 10227, Mar. 10, 1976]

§ 325.39 Measurement procedure; highway operations.

(a) In accordance with the rules in this subpart, a measurement shall be made of the sound level generated by a motor vehicle operating through the measurement area on the traveled lane of the highway within the test site, regardless of the highway grade, load, acceleration or deceleration.

(b) The sound level generated by the motor vehicle is the highest reading observed on the sound level measurement system as the vehicle passes through the measurement area, corrected, when appropriate, in accordance with the rules in subpart F of this part. (Table 1 in § 325.7 lists the range of maximum permissible sound level readings for various test conditions.) The sound level of the vehicle being measured must be observed to rise at least 6 dB(A) before the maximum sound level occurs and to fall at least 6 dB(A) after the maximum sound level occurs in order to be considered a valid sound level reading.

[40 FR 42437, Sept. 12, 1975, as amended at 41 FR 10227, Mar. 10, 1976]

Subpart E—Measurement of Noise Emissions; Stationary Test

§ 325.51 Scope of the rules in this subpart.

(a) The rules in this subpart specify conditions and procedures for measuring the sound level generated by a vehicle when the vehicle's engine is rapidly accelerated from idle to governed speed at wide open throttle with the vehicle stationary, its transmission in neutral, and its clutch engaged, for the purpose of ascertaining whether the motor vehicle conforms to the Standard for Operation Under Stationary Test, 40 CFR 202.21.

(b) The rules in this subpart apply only to a motor vehicle that is equipped with an engine speed governor.

(c) Tests conducted in accordance with the rules of this subpart may be made on either side of the vehicle.

§ 325.53 Site characteristics; stationary test.

(a)(1) The motor vehicle to be tested shall be parked on the test site. A microphone target point shall be established on the ground surface of the site on the centerline of the lane in which the motor vehicle is parked at a point that is within 3 feet (.9 m) of the longitudinal position of the vehicle's exhaust system outlet(s). A microphone location point shall be established on the ground surface not less than 31 feet (9.5 m) and not more than 83 feet (25.3 m) from the microphone target point. Within the test site is a triangular measurement area. A plan view diagram of a standard test site, having an open site within a 50-foot (15.2 m) radius of both the microphone target point and the microphone location point, is shown in Figure 2.

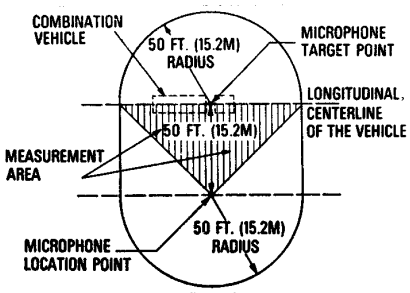

Figure 2
STANDARD TEST SITE; STATIONARY TEST

(2) Measurements may be made at a test site having smaller or greater dimensions in accordance with the rules in subpart F of this part.

(b) The test site must be an open site, essentially free of large sound-reflecting objects. However, the following objects may be within the test site, including the triangular measurement area:

(1) Small cylindrical objects such as fire hydrants or telephone or utility poles.

(2) Rural mailboxes.

(3) Traffic railings of any type of construction except solid concrete barriers (see § 325.5(c)(4)).

(4) One or more curbs having a height of 1 foot (.3 m) or less.

(c) The following objects may be within the test site if they are outside of the triangular measurement area of the site:

(1) Any vertical surface, regardless of size (such as a billboard), having a lower edge more than 15 feet (4.6 m) above the ground.

(2) Any uniformly smooth surface slanting away from the vehicle with a slope that is less than 45 degrees above the horizontal.

(3) Any surface slanting away from the vehicle that is 45 degrees or more and not more than 90 degrees above the horizontal, if all points on the surface are more than 15 feet (4.6 m) above the surface of the ground in the test site.

(d) The surface of the ground within the measurement area must be relatively flat. (See § 325.5(c)(5)). The site shall be a ''hard'' site. However, if the site is determined to be ''soft,'' the correction factor specified in § 325.75(b) of this part shall be applied to the measurement.

[40 FR 42437, Sept. 12, 1975, as amended at 41 FR 10227, Mar. 10, 1976; 54 FR 50385, Dec. 6, 1989]

§ 325.55 Ambient conditions; stationary test.

(a)(1) *Sound.* The ambient A-weighted sound level at the microphone location point shall be measured, in the absence of motor vehicle noise emanating from within the clear zone, with fast meter response using a sound level measurement system that conforms to the rules of § 325.23.

(2) The measured ambient level must be 10 dB(A) or more below that level specified in § 325.7, Table 1, which corresponds to the maximum permissible sound level reading which is applicable at the test site at the time of testing.

(b) *Wind.* The wind velocity at the test site shall be measured at the beginning of each series of noise measurements and at intervals of 5–15 minutes thereafter until it has been established that the wind velocity is essentially constant. Once this fact has been established, wind velocity measurements may be made at intervals of once every hour. Noise measurements may only be made if the measured wind velocity is 12 mph (19.3 kph) or less. Gust wind measurements of up to 20 mph (33.2 kph) are allowed.

(c) *Precipitation*. Measurements are prohibited under any conditions of precipitation, however, measurements may be made with snow on the ground. The ground within the measurement area must be free of standing water.

[40 FR 42437, Sept. 12, 1975, as amended at 41 FR 28267, July 9, 1976]

§325.57 Location and operation of sound level measurement systems; stationary test.

(a) The microphone of a sound level measurement system that conforms to the rules in §325.23 shall be located at a height of not less than 2 feet (.6 m) nor more than 6 feet (1.8 m) above the plane of the roadway surface and not less than 3½ feet (1.1 m) above the surface on which the microphone stands. The preferred microphone height on flat terrain is 4 feet (1.2 m).

(b) When the sound level measurement system is hand-held or otherwise monitored by a person located near its microphone, the holder must orient himself/herself relative to the highway in a manner consistent with the recommendation of the manufacturer of the sound level measurement system. In no case shall the holder or observer be closer than 2 feet (.6 m) from the system's microphone, nor shall he/she locate himself/herself between the microphone and the vehicle being measured.

(c) The microphone of the sound level measurement system shall be oriented toward the vehicle at an angle that is consistent with the recommendation of the system's manufacturer. If the manufacturer of the system does not recommend an angle of orientation for its microphone, the microphone shall be oriented at an angle of not less than 70 degrees and not more than perpendicular to the horizontal plane of the test site at the microphone target point.

(d) The sound level measurement system shall be set to the A-weighting network and ''fast'' meter response mode.

[40 FR 42437, Sept. 12, 1975, as amended at 41 FR 10227, Mar. 10, 1976]

§325.59 Measurement procedure; stationary test.

In accordance with the rules in this subpart, a measurement shall be made of the sound level generated by a stationary motor vehicle as follows:

(a) Park the motor vehicle on the test site as specified in §325.53 of this subpart. If the motor vehicle is a combination (articulated) vehicle, park the combination so that the longitudinal centerlines of the towing vehicle and the towed vehicle or vehicles are in substantial alinement.

(b) Turn off all auxiliary equipment which is installed on the motor vehicle and which is designed to operate under normal conditions only when the vehicle is operating at a speed of 5 mph (8 kph) or less. Examples of such equipment include cranes, asphalt spreaders, liquid or slurry pumps, auxiliary air compressors, welders, and trash compactors.

(c) If the motor vehicle's engine radiator fan drive is equipped with a clutch or similar device that automatically either reduces the rotational speed of the fan or completely disengages the fan from its power source in response to reduced engine cooling loads, park the vehicle before testing with its engine running at high idle or any other speed the operator may choose, for sufficient time but not more than 10 minutes, to permit the engine radiator fan to automatically disengage when the vehicle's noise emissions are measured under stationary test.

(d) With the motor vehicle's transmission in neutral and its clutch engaged, rapidly accelerate the vehicle's engine from idle to its maximum governed speed with wide open throttle. Return the engine's speed to idle.

(e) Observe the maximum reading on the sound level measurement system during the time the procedures specified in paragraph (d) of this section are followed. Record that reading, if the reading has not been influenced by extraneous noise sources such as motor vehicles operating on adjacent roadways.

(f) Repeat the procedures specified in paragraphs (d) and (e) of this section until the first two maximum sound level readings that are within 2 dB(A) of each other are recorded. Numerically average those two maximum

sound level readings. When appropriate, correct the average figure in accordance with the rules in subpart F of this part.

(g) The average figure, corrected as appropriate, contained in accordance with paragraph (f) of this section, is the sound level generated by the motor vehicle for the purpose of determining whether it conforms to the Standard for Operation Under Stationary Test, 40 CFR 202.21. (Table 1 in § 325.7 lists the range of maximum permissible sound level readings for various test conditions.)

[40 FR 42437, Sept. 12, 1975, as amended at 41 FR 10226, Mar. 10, 1976]

Subpart F—Correction Factors

§ 325.71 Scope of the rules in this subpart.

(a) The rules in this subpart specify correction factors which are added to, or subtracted from, the reading of the sound level generated by a motor vehicle, as displayed on a sound level measurement system, during the measurement of the motor vehicle's sound level emissions at a test site which is not a standard site.

(b) The purpose of adding or subtracting a correction factor is to equate the sound level reading actually generated by the motor vehicle to the sound level reading it would have generated if the measurement had been made at a standard test site.

§ 325.73 Microphone distance correction factors.[1]

If the distance between the microphone location point and the microphone target point is other than 50 feet (15.2 m), the maximum observed sound level reading generated by the motor vehicle in accordance with § 325.39 of this part or the numerical average of the recorded maximum observed sound level readings generated by the motor vehicle in accordance with § 325.59 of this part shall be corrected as specified in the following table:

TABLE 2—DISTANCE CORRECTION FACTORS

If the distance between the microphone location point and the microphone target point is	The value dB(A) to be applied to the observed sound level reading is—
31 feet (9.5 m) or more but less than 35 feet (10.7 m)	−4
35 feet (10.7 m) or more but less than 39 feet (11.9 m)	−3
39 feet (11.9 m) or more but less than 43 feet (13.1 m)	−2
43 feet (13.1 m) or more but less than 48 feet (14.6 m)	−1
48 feet (14.6 m) or more but less than 58 feet (17.7 m)	0
58 feet (17.7 m) or more but less than 70 feet (21.3 m)	+1
70 feet (21.3 m) or more but less than 83 feet (25.3 m)	+2

[40 FR 42437, Sept. 12, 1975, as amended at 54 FR 50385, Dec. 6, 1989]

§ 325.75 Ground surface correction factors.[1]

(a) *Highway operations.* When measurements are made in accordance with the rules in subpart D of this part upon a test site which is ''hard,'' a correction factor of 2 dB(A) shall be subtracted from the maximum observed sound level reading generated by the motor vehicle to determine whether the motor vehicle conforms to the Standards for Highway Operations, 40 CFR 202.20.

(b) *Stationary Test.* When measurements are made in accordance with the rules in subpart E of this part upon a test site which is ''soft,'' a correction factor of 2 dB(A) shall be added to the numerical average of the recorded maximum observed sound level readings generated by the motor vehicle to determine whether the motor vehicle conforms to the Standard for Operation Under Stationary Test, 40 CFR 202.21.

[1] Table 1, in § 325.7 is a tabulation of the maximum allowable sound level readings taking into account both the distance correction factors contained in § 325.73 and the ground surface correction factors contained in § 325.75.

[1] Table 1, in § 325.7 is a tabulation of the maximum allowable sound level readings taking into account both the distance correction factors contained in § 325.73 and the ground surface correction factors contained in § 325.75.

§325.77 Computation of open site requirements—nonstandard sites.

(a) If the distance between the microphone location point and the microphone target point is other than 50 feet (15.2 m), the test site must be an open site within a radius from both points which is equal to the distance between the microphone location point and the microphone target point.

(b) Plan view diagrams of nonstandard test sites are shown in Figures 3 and 4. Figure 3 illustrates a test site which is larger than a standard test site and is based upon a 60-foot (18.3 m) distance between the microphone location point and the microphone target point. (See §325.79(b)(1) for an example of the application of the correction factor to a sound level reading obtained at such a site.) Figure 4 illustrates a test site which is smaller than a standard test site and is based upon a 35-foot (10.7 m) distance between the microphone location point and the microphone target point. (See §325.79(b)(2) for an example of the application of the correction factor to a sound level reading obtained at such a site.)

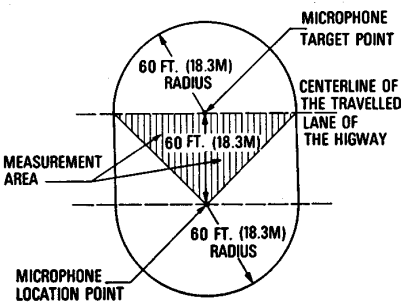

Figure 3
NON-STANDARD TEST SITE;
(60 FT (18.3M) DISTANCE BETWEEN
MICROPHONE LOCATION AND TARGET POINTS)

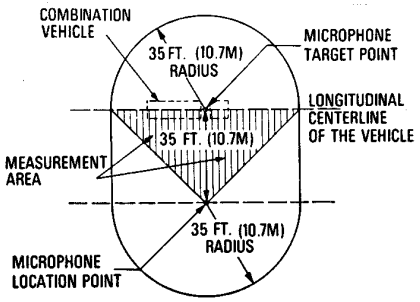

Figure 4
NON-STANDARD TEST SITE;
(35 FT.(10.7M) DISTANCE BETWEEN
MICROPHONE LOCATION AND TARGET POINTS)

§325.79 Application of correction factors.

(a) If two correction factors apply to a measurement they are applied cumulatively.

(b) The following examples illustrate the application of correction factors to sound level measurement readings:

(1) *Example 1—Highway operations.* Assume that a motor vehicle generates a maximum observed sound level reading of 86 dB(A) during a measurement in accordance with the rules in subpart D of this part. Assume also that the distance between the microphone location point and the microphone target point is 60 feet (18.3 m) and that the measurement area of the test site is acoustically ''hard.'' The corrected sound level generated by the motor vehicle would be 85 dB(A), calculated as follows:

86 dB(A)	Uncorrected reading
+1 dB(A)	Distance correction factor
−2 dB(A)	Ground surface correction factor
85 dB(A)	Corrected reading

(2) *Example 2—Stationary test.* Assume that a motor vehicle generates maximum sound level readings which average 88 dB(A) during a measurement in accordance with the rules in subpart E of this part. Assume also that the distance between the microphone location point and the microphone target point is 35 feet (10.7 m), and that the measurement area of the test site is acoustically ''soft.'' The corrected sound level generated by the motor vehicle

would be 87 dB(A), calculated as follows:

88 dB(A)	Uncorrected average of readings
−3 dB(A)	Distance correction factor
+2 dB(A)	Ground surface correction factor
87 dB(A)	Corrected reading

Subpart G—Exhaust Systems and Tires

§ 325.91 Exhaust systems.

A motor vehicle does not conform to the visual exhaust system inspection requirements, 40 CFR 202.22, of the Interstate Motor Carrier Noise Emission Standards, if inspection of the exhaust system of the motor vehicle discloses that the system—

(a) Has a defect which adversely affects sound reduction, such as exhaust gas leaks or alteration or deterioration of muffler elements, (small traces of soot on flexible exhaust pipe sections shall not constitute a violation of this subpart);

(b) Is not equipped with either a muffler or other noise dissipative device, such as a turbocharger (supercharger driven by exhaust gases); or

(c) Is equipped with a cut-out, bypass, or similar device, unless such device is designed as an exhaust gas driven cargo unloading system.

§ 325.93 Tires.

(a) Except as provided in paragraph (b) of this section, a motor vehicle does not conform to the visual tire inspection requirements, 40 CFR 202.23, of the Interstate Motor Carrier Noise Emissions Standards, if inspection of any tire on which the vehicle is operating discloses that the tire has a tread pattern composed primarily of cavities in the tread (excluding sipes and local chunking) which are not vented by grooves to the tire shoulder or circumferentially to each other around the tire.

(b) Paragraph (a) of this section does not apply to a motor vehicle operated on a tire having a tread pattern of the type specified in that paragraph, if the motor carrier who operates the motor vehicle demonstrates to the satisfaction of the Associate Administrator for Motor Carriers or his/her designee that either—

(1) The tire did not have that type of tread pattern when it was originally manufactured or newly remanufactured; or

(2) The motor vehicle generates a maximum sound level reading of 90 dB(A) or less when measured at a standard test site for highway operations at a distance of 15.3 meters (50 feet) and under the following conditions:

(i) The measurement must be made at a time and place and under conditions specified by the Associate Administrator or his/her designee.

(ii) The motor vehicle must be operated on the same tires that were installed on it when the inspection specified in paragraph (a) of this section occurred.

(iii) The motor vehicle must be operated on a highway having a posted speed limit of more than 56.3 kph (35 mph).

(iv) The sound level measurement must be made while the motor vehicle is operating at the posted speed limit.

[40 FR 42437, Sept. 12, 1975, as amended at 60 FR 38743, July 28, 1995]

SUBCHAPTER B—FEDERAL MOTOR CARRIER SAFETY REGULATIONS

PART 350—COMMERCIAL MOTOR CARRIER SAFETY ASSISTANCE PROGRAM

Sec.
350.1 Purpose.
350.3 Definitions.
350.5 Policy.
350.7 Objective.
350.9 Conditions for basic grant approval.
350.11 Adopting and enforcing compatible laws and regulations.
350.13 State Enforcement Plan (SEP) for a basic grant.
350.15 Certification of compliance by State.
350.17 Maintenance of effort.
350.19 Grant application submission.
350.21 Distribution of funds.
350.23 Acceptance of State plan.
350.25 Effect of failure to submit a satisfactory State plan.
350.27 Procedure for withdrawal of approval.
350.29 Eligible costs.

APPENDIX A TO PART 350—GUIDELINES TO BE USED IN PREPARING STATE ENFORCEMENT PLAN
APPENDIX B TO PART 350—FORM OF STATE CERTIFICATION
APPENDIX C TO PART 350—TOLERANCE GUIDELINES FOR ADOPTING COMPATIBLE STATE RULES AND REGULATIONS

AUTHORITY: 49 U.S.C. 31101–31104, 31108, 31136, 31140–31141, 31161, 31310–31311, 31502; and 49 CFR 1.48.

SOURCE: 57 FR 40956, Sept. 8, 1992, unless otherwise noted.

§ 350.1 Purpose.

The purpose of this part is to prescribe requirements for Federal assistance to States for programs to adopt and enforce Federal rules, regulations, standards and orders applicable to commercial motor vehicle safety or compatible State rules, regulations, standards and orders.

§ 350.3 Definitions.

As used in this part:

Administrator means the Federal Highway Administrator.

Basic allocation means only those Federal funds distributed by the allocation formula, or the minimum funding level specified in this part.

Basic grant means the funds available to a State for carrying out an approved State Enforcement Plan (SEP), which include, but are not limited to:

(1) Recruiting and training of personnel, payment of salaries and fringe benefits, the acquisition and maintenance of equipment except those at fixed weigh scales for the purposes of weight enforcement, and reasonable overhead costs needed to operate the program;

(2) Commencement and conduct of expanded systems of enforcement;

(3) Establishment of an effective out-of-service and compliance enforcement system; and

(4) Retraining and replacing staff and equipment.

Commercial motor vehicle means any self-propelled or towed vehicle used on the public highways in commerce to transport passengers or property when:

(1) The vehicle has a gross vehicle weight rating or gross combination weight rating of 10,001 or more pounds; or

(2) The vehicle is designed to transport more than 15 passengers, including the driver; or

(3) The vehicle is used in the transportation of hazardous materials in quantities requiring placarding under regulations issued by the Secretary of Transportation pursuant to the authority of the Hazardous Material Transportation Act, as amended (49 U.S.C. app. 1801 *et seq.*).

Compatible or *compatibility* means, in relation to State laws and regulations pertaining to commercial motor vehicle safety, having the same effect as the Federal Motor Carrier Safety Regulations (FMCSR) or Federal Hazardous Materials Regulations (FHMR) in that those State rules are either identical or fall within the tolerance guidelines in appendix C to this part.

Motor carrier has the same meaning such term has in § 390.5.

State means a State of the United States, the District of Columbia, the Commonwealth of Puerto Rico, the Virgin Islands, American Samoa,

Guam, or the Commonwealth of the Northern Marianas.

[57 FR 40956, Sept. 8, 1992, as amended at 60 FR 38743, July 28, 1995]

§ 350.5 Policy.

The Federal Highway Administration (FHWA) policy is to encourage each State to enforce uniform motor carrier safety and hazardous materials regulations for both interstate and intrastate motor carriers and drivers. The requirements for compliance with safety standards in one State should be compatible with the requirements in another State. A coordinated program of inspection and enforcement activities is needed to avoid duplication of effort, to promote compliance with uniform safety requirements by all types of motor carriers, and to provide a basis for sanctioning carriers for poor safety performance.

§ 350.7 Objective.

The objective of the Motor Carrier Safety Assistance Program (MCSAP) is to reduce the number and severity of accidents and hazardous materials incidents involving commercial motor vehicles by substantially increasing the level and effectiveness of enforcement activity and the likelihood that safety defects, driver deficiencies and unsafe carrier practices will be detected and corrected.

§ 350.9 Conditions for basic grant approval.

(a) The State shall agree to adopt, and to assume responsibility for enforcing the Federal Motor Carrier Safety Regulations (FMCSR) (49 CFR parts 390 through 399, except as may be determined by the Administrator to be inapplicable to a State enforcement program) including highway related portions of the Federal Hazardous Materials Regulations (FHMR) (49 CFR parts 107, 171–173, 177, 178 and 180), or compatible State rules, regulations, standards, and orders applicable to motor carrier safety, including highway transportation of hazardous materials.

(b) The State shall submit a State Enforcement Plan (SEP) for the conduct of an effective safety program. Such plan, upon acceptance by the FHWA, will serve as the basis for monitoring and evaluating performance of the State under the grant, and will be resubmitted, with revisions as necessary, in applications for reapproval in following years.

(c) The SEP shall designate the lead State agency responsible for administering the plan for the State.

(d) The agencies named to perform functions under the plan shall have the legal authority, resources, and qualified personnel necessary to enforce the FMCSR and FHMR or compatible State rules at the time the State implements the approved SEP.

(e) The State shall allocate adequate funds for the administration of the SEP and the enforcement of the FMCSR and FHMR or compatible State rules.

(f) State laws shall provide for right of entry and inspection adequate to carry out the SEP and provide that the State will grant maximum reciprocity for inspections conducted pursuant to the North American Uniform Driver/Vehicle Inspection standard, through the use of a nationally accepted system allowing ready identification of previously inspected commercial motor vehicles.

(g) The State shall certify that it will maintain its aggregate expenditure of funds by the State and political subdivisions thereof, exclusive of Federal funds, for commercial motor vehicle safety programs and related programs eligible for funding under this part, as required by § 350.17 of this part.

(h) The State shall agree to prepare and submit all reports required in connection with the SEP or other conditions of the grant to the FHWA upon request.

(i) The lead State agency shall agree to adopt such uniform reporting requirements and use such uniform forms to record work activities performed under the SEP as may be established and required by the FHWA.

(j) The State shall require registrants of commercial motor vehicles to declare, at the time of registration, knowledge of the FMCSR and FHMR or compatible State rules, as applicable.

(k) The statutory authority of the State to regulate motor carriers shall extend to private motor carriers of

property as well as for-hire motor carriers.

(l) The State shall ensure that commercial motor vehicle size and weight enforcement, drug interdiction, and traffic enforcement activities funded under this program will not diminish the effectiveness of other commercial motor vehicle safety enforcement programs.

(m) The State shall take appropriate steps to ensure that fines imposed and collected by the State for violations will be reasonable and appropriate and, to the maximum extent practicable, will seek to implement into law and practice the recommended fine schedule published by the Commercial Vehicle Safety Alliance.

(n) The State will participate in the SAFETYNET no later than January 1, 1994.

(o) The State will undertake efforts to emphasize and improve enforcement of State and local traffic laws as they pertain to commercial motor vehicle safety.

(p) The State will ensure comprehensive enforcement and reinspection of vehicles and drivers placed out of service to verify compliance with lawful orders and the correction of all violations cited on roadside inspection reports.

§350.11 Adopting and enforcing compatible laws and regulations.

(a) No funds shall be awarded under this part to States that do not adopt and enforce laws and regulations that are compatible with the FMCSR (except as may be determined by the Administrator to be inapplicable) and the FHMR, unless otherwise provided in the Tolerance Guidelines (appendix C to this part).

(b) The State shall conduct an annual review of all its laws and regulations pertaining to commercial motor vehicle safety to determine their compatibility with the FMCSR and FHMR. The review shall be carried out in accordance with part 355 of this subchapter. To support a State's contention of compatibility, the State may submit opinions from the State's Attorney General or other chief legal officer with respect to the effect and enforceability of State laws, rules, regulations, standards, or orders in relation to the FMCSR and FHMR.

(c) State laws and regulations pertaining to commercial motor vehicle safety in interstate commerce are also subject to preemption under the provisions of §355.25 of this chapter.

(d) State laws and regulations that are not identical to the FMCSR or FHMR will be deemed compatible for purposes of this part only if they are within the variances permitted under the tolerance guidelines in appendix C of this part.

(e) No State shall implement any changes to a State law or regulation which makes that or any other law or regulation incompatible under this section.

(f) As soon as practical after the effective date of any amendment to the FMCSR or FHMR, but no longer than three years, the applicable State law or regulation must be adopted or amended in such manner as makes it compatible with the amended Federal provision.

(g) Any State may apply for a variance related to State laws, regulations or enforcement practices pertaining to commercial motor vehicle safety in intrastate commerce, which shall be granted if the State can satisfactorily demonstrate that the State law, regulation or enforcement practice achieves substantially the same purpose as the similar Federal rule, does not apply to interstate commerce, and has no adverse impact on safety.

(h) Upon a determination by the FHWA, on its own initiative or after determination initiated at the request of any person, including a State, that a State has failed to comply with the requirements of this part, or that a State law, regulation or enforcement practice pertaining to commercial motor vehicle safety in either interstate or intrastate commerce is incompatible with the FMCSR or HMTR, a proceeding under §350.27 for withdrawal of approval of a State plan may be initiated. This proceeding shall be in addition to or in conjunction with any action initiated under §355.25 of this chapter.

(i) Any decision regarding the compatibility of a State law or regulation

with the FHMR that requires an interpretation will be referred to the Research and Special Programs Administration for such interpretation before proceeding under § 350.27.

[57 FR 40956, Sept. 8, 1992, as amended at 59 FR 5264, Feb. 3, 1994]

§ 350.13 State Enforcement Plan (SEP) for a basic grant.

(a) As a condition of the basic grant the State shall submit its proposed SEP or update thereof to the FHWA division office.

(b) The SEP shall:

(1) Provide an assessment of the commercial motor carrier and highway hazardous materials safety problems within the State;

(2) Identify State penalty structures applicable to enforcement activities covered in the SEP, evaluate their reasonableness and appropriateness, and indicate the steps being taken to approximate the published Commercial Vehicle Safety Alliance (CVSA) fine schedule, if necessary.

(3) Demonstrate that the State has authority to regulate and to enforce its regulations with respect to private carriers of property as well as for-hire motor carriers; and

(4) Describe in detail the objectives sought to be achieved, the resources to be employed, the work items to be performed, the unit costs where feasible and the methods to be used to measure effectiveness. Specifically, the SEP shall:

(i) Identify other agencies participating in the plan and describe the roles of each;

(ii) Identify the number and category of personnel employed and the specialized training provided;

(iii) Include roadside inspection activity at such times and locations as will assure comprehensive enforcement;

(iv) Describe the proposed reinspection activities that would ensure motor carriers had made timely corrections of the out-of-service defects and other safety violations cited on the roadside inspection reports and that out-of-service drivers came into compliance with the regulations. These reinspection activities shall include covert operations to determine the extent of compliance with the State's out-of-service orders. State enforcement activities to remedy out-of-service violations shall depend on the extent of the verification problem and may include, but are not limited to: on-site reinspection activities; covert surveillance activities; safety and compliance review programs; and other State proposed activities approved by the FHWA; and

(v) Describe the tracking system to be used by the State to ensure that the motor carrier has certified to the correction of the safety violations and returned the inspection report to the issuing agency.

(5) Be coordinated with the State highway safety plan under 23 U.S.C. 402.

(6) Describe the methods the State will use to promote:

(i) Removing impaired drivers from the highways through enforcement of regulations on the use of alcohol and controlled substances and by ensuring ready roadside access to alcohol detection and measuring equipment;

(ii) Appropriate training to its personnel on the recognition of drivers impaired by alcohol or controlled substances;

(iii) Enforcement of requirements relating to the licensing of commercial motor vehicle drivers, including checking the status of commercial driver's licenses;

(iv) Improved enforcement of hazardous materials transportation regulation by encouraging more inspections of shipper facilities and comprehensive inspections of hazardous materials loads;

(v) Effective controlled substance interdiction activities and training on strategies for carrying out such activities; and

(vi) Effective use of trained and qualified officers and employees of political subdivisions and local governments, under the direction and supervision of the lead agency, in enforcement of commercial motor vehicle safety and hazardous materials transportation safety.

(7) Document, if funds are used for vehicle size and weight, alcohol/controlled substance checks, drug interdiction and/or traffic law enforcement, that such activities are carried out in

conjunction with an appropriate type of vehicle or driver inspection.

(c) Guidelines for the preparation of the SEP are provided in appendix A to this part.

(Approved by the Office of Management and Budget under control number 2125–0536)

§350.15 Certification of compliance by State.

The FHWA will accept a certification, executed by the Governor, the State's Attorney General or other State official specifically designated by the Governor, in the form provided in appendix B to this part, that the State is in compliance with the conditions of §350.9 of this part. The certification shall accompany the SEP and be made part thereof. The certification shall be supplemented by a copy of any State law, regulation or forms pertaining to commercial motor carrier safety adopted since the State's last certification, if any, which bear on the items listed in the certification. The certificate should acknowledge that activities described in §350.9 will be performed.

§350.17 Maintenance of effort.

(a) No SEP shall be approved or grant awarded in the absence of a commitment by the State to maintain the aggregate expenditure of funds by the State for commercial motor vehicle and highway hazardous materials safety programs as provided in this section.

(b) The State shall certify each year that the level of State funding for the 12-month period covered in the SEP for motor carrier and highway hazardous materials safety, size and weight, traffic safety and drug interdiction enforcement purposes shall not fall below the average aggregate expenditure of funds, exclusive of Federal funds and any State matching funds used to receive Federal funding, for those purposes in the base period of three full fiscal years prior to December 18, 1991. The State may elect to use either Federal fiscal years or State fiscal years at its option.

(c) In determining whether a State has complied with this maintenance of effort commitment, expenditures of State funds for federally sponsored demonstration or pilot programs need not be included in aggregating expenditures in the base period.

(d) For the purpose of determining the State's expenditures in the base period, only costs associated with activities performed by State or local agencies currently receiving or projected to receive funds under this part must be counted, and only those activities which meet the most current requirements for funding eligibility under the grant program must be included.

(e) If it is determined that a State has not maintained its level of expenditures as certified, the State shall be notified of the deficiency. Upon receipt of such notification, the State shall have the opportunity to submit information to substantiate the certification.

(f) If, after consideration of all information, it is finally determined that a State has failed to meet its maintenance of effort requirement, an amount equal to the deficiency shall be deducted from the State's current allocation. That amount will then be available for reallocation under §350.21 of this part.

§350.19 Grant application submission.

A State shall submit its application to the FHWA division office on or before August 1 of each year. The time for submitting a plan may be extended for a period not to exceed 30 calendar days for good cause shown. Grants are approved for the fiscal year for which application is made. Failure of a State to submit a plan for any given fiscal year will preclude consideration of grant approval for that State for that year.

§350.21 Distribution of funds.

(a) The Federal share payable to reimburse States for eligible costs incurred in the administration of a commercial motor carrier safety program shall not exceed 80 percent.

(b) The FHWA will, upon request, waive the requirement for matching funds to be provided by the Virgin Islands, American Samoa, Guam, or the Commonwealth of the Northern Marianas.

(c) The funds available to any State for a basic grant in any one year shall be distributed according to an allocation formula based on the most recent reliable data concerning the following factors in equal proportion:

(1) Road mileage (all highways);

(2) Vehicle miles travelled (all vehicles);

(3) Number of commercial vehicles over 10,000 pounds (gross vehicle weight rating);

(4) Population (most current census); and

(5) Special fuel consumption (net after reciprocity adjustment).

(d) Subject to the availability of funds, the individual allocations shall be adjusted so that no State qualifying for an award shall be allocated more than a ceiling amount, which shall be no less than the ceiling amount used in the previous year's distribution process. The ceiling shall be increased each fiscal year in proportion to the amount of increase in the funds available for distribution in that fiscal year. The allocation formula shall also be adjusted so that no State qualifying for an award shall be allocated:

(1) Less than the basic allocation of funds received in the 1991 fiscal year, provided the SEP continues to support that level of funding; or

(2) Less than 0.5 percent of the total amount allocated to all States (or $250,000, whichever is greater).

(3) Beginning on October 1, 1994, and each October 1 thereafter, more than 50 percent of the basic formula allocation provided for in this section if any such State has adopted and is enforcing compatible regulations applicable to interstate transportation, but has not adopted or is not enforcing compatible regulations applicable to intrastate transportation.

(e) Funds will be allocated to States in recognition of innovative, successful, cost efficient or cost effective programs to promote commercial motor vehicle safety and hazardous materials transportation safety and provide incentives to States that conduct traffic safety enforcement activities done in conjunction with motor carrier safety inspections. The allocations will be done in three separate grants:

(1) Basic grants—funds used to perform commercial vehicle safety activities such as driver/vehicle inspections, safety reviews and compliance reviews. Allocation for basic grants will be made pursuant to paragraphs (c) and (d) of this section. Unused basic allocations will be periodically redistributed. Any eligible MCSAP activity can be included under the State's basic grant activities.

(2) Supplemental grants—funds used to conduct additional activities or innovative programs demonstrated to be effective and cost-efficient, and may include emphasis areas established by policy in consultation with the States. To be eligible for a supplemental grant, a State must qualify for a basic grant. Unused supplemental grant funds will be periodically redistributed among those States that are able to demonstrate innovative, cost-effective purposes consistent with the objectives of this part.

(3) Special grants—funds used by States to meet the conditions in § 350.9 regarding eligibility requirements for basic grants; or for States already participating in the basic program, to develop the prerequisites for expanded activities not presently part of their basic programs. Special grants are also available for research or data collection activities, or for projects specifically identified by statute, as, for example, commercial driver's license enforcement. To be eligible for a special grant, a State need not qualify for a basic grant.

(f) Notwithstanding any other provisions of this section, funds which have not been awarded to States under application of the allocation formula and the provisions for additional allocations contained in this section may be redistributed at the discretion of the Administrator. Subject to the availability of funds, the primary purpose of any such redistribution is to prevent a decrease in the amount of Federal funds used by particular States in previous years to support effective and innovative programs. Preference will be given to those States which have maintained effective federally assisted programs at levels beyond that possible if limited to formula allocations.

(g) The funds obligated by a State will remain available to the State for a period of the fiscal year in which obligated and the next full fiscal year. Any unexpended obligations which are to be carried over to the next fiscal year must be accounted for in the new SEP for that fiscal year. Funds must be expended in the order in which they are obligated.

[57 FR 40956, Sept. 8, 1992, as amended at 59 FR 5264, Feb. 3, 1994]

§ 350.23 Acceptance of State plan.

(a) Each plan will be reviewed for content, after which the State will be notified of its acceptance or rejection.

(b) The time for submitting a plan may be extended for a period not to exceed 30 calendar days for good cause shown.

(c) Each State plan shall include an analysis of the effectiveness of its prior year's plan in reaching the stated objectives. The State will be advised whether any changes are needed in the plan or in its intended objectives.

§ 350.25 Effect of failure to submit a satisfactory State plan.

(a) A State will be notified in writing that approval of the plan is being withheld along with the reasons for such action, if:

(1) It is determined that a plan does not meet the requirements described in §§ 350.9 and 350.13; or

(2) It is determined that an SEP is not adequate to ensure effective enforcement of the FMCSR and FHMR; or compatible State rules.

(b) The State shall have 30 calendar days from the date of the notice to modify the plan and resubmit it for approval.

§ 350.27 Procedure for withdrawal of approval.

(a) If a State is not performing according to an approved plan or a State is not adequately enforcing the FMCSR and FHMR, or compatible State rules, the Administrator shall issue a written notice of proposed determination of nonconformity to the Governor of the State or the official designated in the plan. The notice shall state the reasons for the proposed determination and inform the State that it may reply in writing within 30 calendar days from the date of the notice. The reply should address the deficiencies cited in the notice and provide documentation as necessary.

(b) The Administrator's decision, after notice and opportunity for comment, will constitute the final decision of the FHWA. An adverse decision will result in immediate cessation of Federal participation in the plan.

(c) If the State does not respond to a notice of proposed determination of nonconformity as provided in paragraph (a) of this section, the proposed determination shall become the Administrator's final decision with the same effect as paragraph (b) of this section.

(d) Any State aggrieved by an adverse decision issued under this part may seek judicial review pursuant to 5 U.S.C. ch. 7.

§ 350.29 Eligible costs.

(a) Work must be performed pursuant to an acceptable State plan in order for the cost of that work to be eligible for reimbursement. The eligible costs under the grant program are comprised of the allowable direct costs incident to the State's performance and its allocable portion of allowable indirect costs, less applicable credits.

(b) The primary functions to be performed under a basic grant are uniform roadside inspections and safety and compliance reviews with follow-up enforcement actions or compliance measures. Consequently, the major cost will be compensation and expenses of the personnel required to perform these functions.

(c) Subject to paragraph (c)(5) of this section, funds may also be used for:

(1) Enforcement of size and weight limitations;

(2) Detecting the unlawful presence of controlled substances in a commercial motor vehicle or on the person of any occupant (including the operator) of such a vehicle;

(3) Enforcement of State traffic laws and regulations designed to promote safe operation of commercial motor vehicles; and

(4) Sanitary food transportation inspections pursuant to 49 U.S.C. 2808.

(5) *Provided:* these activities are carried out in conjunction with an appropriate type of inspection for enforcement of safety regulations. Size and weight enforcement must be conducted at locations other than fixed weight facilities, at specific geographical locations where the weight of the vehicle can significantly affect the safe operation of the vehicle, or at seaports where intermodal shipping containers enter and exit the United States.

(d) Eligible personnel costs include, but are not limited to:

(1) Recruitment and screening;

(2) Training;

(3) Salaries and fringe benefits; and

(4) Supervision.

(e) Equipment and travel costs directly related to the primary functions are also eligible for proportionate reimbursement. These costs include, but are not limited to:

(1) Vehicles;

(2) Uniforms;

(3) Communications equipment;

(4) Special inspection equipment;

(5) Vehicle maintenance;

(6) Motor fuel and oil; and

(7) Travel and per diem expenses.

(f) Indirect expenses related to facilities used to conduct inspections or to house enforcement personnel, support staff, and equipment, except those related to fixed weighing facilities, may also be eligible to the extent they are measurable and recurring, such as rent and overhead.

(g) A secondary function of the MCSAP is to develop a data base on which to coordinate resources and improve efficiency. Therefore, costs related to data acquisition, storage, and analysis that are specifically identifiable as program expenses may be eligible for reimbursement.

(h) Clerical and administrative expenses, to the extent they are necessary and directly attributable to the MCSAP, are eligible for reimbursement.

(i) The cost of acquisition of real property, land and buildings, is not eligible as a participating cost in the MCSAP. Expenditures related to the improvement of real property, for example, the installation of lights for the inspection of vehicles at night or minor modifications to existing structures, are not considered acquisition costs.

(j) The eligibility of specific costs is subject to review, and such costs must be necessary, reasonable, allocable to the approved SEP, and allowable under this part and 49 CFR part 18, Uniform Administrative Requirements for Grants and Cooperative Agreements to State and Local Governments.

(k) In-kind contributions are acceptable if they represent eligible costs as established by 49 CFR part 18, OMB Circulars, agency rule or policy.

APPENDIX A TO PART 350—GUIDELINES TO BE USED IN PREPARING STATE ENFORCEMENT PLAN

1. Designate the lead State agency: The plan should indicate the agency responsible for administering the plan.

2. Program Summary: This section includes objectives, activities, resources, costs and an analysis of the effectiveness of the program.

(a) *Define the problem:* In assessing the level of commitment to be made to the enforcement of commercial motor carrier and highway hazardous materials safety regulations, the following factors should be considered:

(1) Volume of commercial motor vehicle traffic;

(2) Type of commercial motor vehicle traffic;

(3) Volume of commercial motor vehicle traffic transporting hazardous materials;

(4) Number and frequency (rate) of commercial motor carrier accidents;

(5) Severity of accidents involving commercial motor carriers:

(i) Fatalities;

(ii) Injuries; and

(iii) Property damage.

(6) Seasonal commercial motor carrier operational patterns within the State;

(7) Type and frequency of violations of traffic safety laws and regulations pertaining to commercial motor vehicles and accidents;

(8) Use of alcohol and controlled substances by commercial motor vehicle drivers; and

(9) Problems related to overweight vehicles and safety. (The information in paragraphs 2(a) (6), (7), (8), and (9) of this appendix may or may not be available to the States at present. To be able to measure program effectiveness, however, States will need to compile this type of data.)

(b) *Determine current enforcement efforts:* The plan should identify the activities currently engaged in by the State to address the commercial motor carrier and hazardous materials safety problems. This should include

a description of existing laws, regulations and compliance activities, as well as the agencies within the State with enforcement responsibilities.

(c) *Establish the objectives:* A key element in each plan is the establishment of the objectives sought to be achieved through the use of Federal funds. The objectives should be stated in terms of quantifiable measurements of results, where possible, or at least of effort. Ideally, the objectives should include a measurable reduction in highway accidents or hazardous materials incidents involving commercial motor vehicles, but may also refer to quantifiable improvements in legislative or regulatory authorities, problem identification, enforcement strategies and resource allocations.

(1) Goals should be identified as:

(i) Short term—the year beginning October 1 following submission of a MCSAP enforcement plan.

(ii) Medium term—two to four years after submission of the enforcement plan.

(iii) Long term—five years beyond the submission of the enforcement plan.

(2) Describe the practices: The plan should describe how the resources are to be employed to achieve the objectives included under 350.13 and should discuss:

(i) Schedules of operation of inspection sites and units;

(ii) Tactics for placing vehicles out of service and verifying compliance;

(iii) Projected number of annual:

(A) Roadside vehicle inspections including Commercial Driver's Licenses checks; and

(B) Safety and Compliance Reviews;

(iv) Methods to inspect all types of carriage;

(v) Strategy for preventing circumvention or avoidance of inspections;

(vi) Procedures for handling hazardous materials carriers and passenger carriers;

(vii) Supervision and recordkeeping; and

(viii) Methods used to coordinate activities with the State highway safety plan under 23 U.S.C. 402, including providing information to the appropriate State agency, describing the information provided, and discussing the comments that were received.

(3) Identify the resources: The plan should detail the resources to be used in accomplishing the objectives, and should include:

(i) State agencies involved:

(A) Lead agency; and

(B) Local and other cooperating political subdivisions.

(ii) Personnel (from each agency involved):

(A) Line functions;

(B) Staff and supervision; and

(C) Administrative, technical and clerical.

(iii) Facilities:

(A) Inspection sites regularly maintained; and

(B) Building space required.

(iv) Equipment:

(A) Vehicles;

(B) Communication and ADP; and

(C) Other specialized tools.

(v) Itemization of Costs:

(A) Personnel (salaries, benefits, etc.);

(B) Equipment (purchase, rental, fuel, maintenance, depreciation, salvage, etc.); and

(C) Facilities (rent and overhead).

(d) *Program evaluation:* Each plan should include a provision for program evaluation of the effectiveness of previous activities. This should include the economic and operational impact of increased enforcement and provisions for review and update of the plan. It is not practicable to establish objective minimums, as each State has unique characteristics and varying levels of existing enforcement activity. The FHWA will cooperate with State regulatory and enforcement agencies by gathering useful information and experience on elements of enforcement practices that produce positive results.

The bottom line objective in any safety program is a decrease in the number and severity of accidents. Motor carrier safety regulations should be designed to prescribe methods to eliminate the risks of accidents. Compliance with such regulations should, therefore, reduce accidents. The States are encouraged to design their programs to link their enforcement efforts to causes of accidents, whenever possible, and to develop the data necessary to demonstrate the results. The States are encouraged to use the safety and program performance data collected over several years to show trends and effects of program activities. In assessing State Enforcement Plans, the FHWA will be particularly attentive to the methods by which effectiveness is to be evaluated, and will provide whatever assistance is feasible in developing measurement factors.

APPENDIX B TO PART 350—FORM OF STATE CERTIFICATION

I (name), (title), on behalf of the State of _____, as requested by the Federal Highway Administrator as a condition of approval of a grant under the authority of Sec. 402 of the Surface Transportation Assistance Act of 1982 (Pub. L. 97–424), do hereby certify as follows:

1. The State (has adopted) (will adopt) commercial motor carrier and highway hazardous materials safety rules and regulations, which (are) (will be) substantially similar to and consistent with the Federal Motor Carrier Safety Regulations and the Federal Hazardous Materials Regulations (a copy of the existing or proposed State rules and regulations to be attached in the first year of the program).

2. The State has designated (name of State commercial motor carrier safety agency) as

the lead agency to administer the enforcement plan for which the grant is being awarded, and (name of agencies) to perform functions under the plan. These agencies (have) (will have) the legal authority, resources and qualified personnel necessary for the enforcement of the State's commercial motor carrier and highway hazardous materials safety rules and regulations.

3. The State will devote such of its own funds as may be necessary to provide its matching share to the Federal assistance provided in the grant to administer the plan it is herewith submitting, and to enforce the State's commercial motor carrier safety rules and regulations in a manner to be consistent with the approved plan.

4. The laws of the State provide the State's enforcement officers right of entry and inspection sufficient to carry out the purposes of the enforcement plan as approved and provides that the State will grant maximum reciprocity for inspections conducted pursuant to the North American Inspection Standard, through the use of a nationally accepted system allowing ready identification of previously inspected commercial motor vehicles.

5. The State shall require that all reports relating to the program be submitted to the appropriate State agency or agencies; and such reports will be made available to the Federal Highway Administration upon request.

6. The State will adopt such uniform reporting requirements and use such uniform forms for recordkeeping, inspection, and other enforcement activities as may be established by the Federal Highway Administration.

7. The State (has) (will have) in effect a requirement that registrants of commercial motor vehicles declare knowledge of the applicable Federal or State commercial motor carrier safety rules and regulations.

8. The State will maintain the level of its expenditures for motor carrier safety programs and, if applicable, size and weight, traffic safety, and drug interdiction enforcement programs, exclusive of Federal assistance, at least at the level of the average of the aggregate expenditures of the State and political subdivisions for these purposes during the last three full fiscal years immediately prior to December 18, 1991 (fiscal years 1989, 1990, and 1991).

9. The State will ensure that commercial motor vehicle size and weight enforcement, drug interdiction, and traffic enforcement activities funded under this program will not diminish the effectiveness of other commercial motor vehicle safety enforcement programs.

10. The State will ensure that fines imposed and collected by the State for violations will be reasonable and appropriate and provides that, to the maximum extent practicable, it will seek to implement into law and practice the recommended fine schedule published by the Commercial Vehicle Safety Alliance.

11. The State will ensure that the SEP is coordinated with the State highway safety plan under 23 U.S.C. 402 and the name of the Governor's highway safety representative (or other authorized State official) through whom coordination was accomplished is _____.

12. The State will participate in the SAFETYNET no later than January 1, 1994.

13. The State will undertake efforts to emphasize and improve enforcement of State and local traffic laws as they pertain to commercial motor vehicle safety.

Date _____

Location _____

(Signature) _____

APPENDIX C TO PART 350—TOLERANCE GUIDELINES FOR ADOPTING COMPATIBLE STATE RULES AND REGULATIONS

1. INTRODUCTION, PURPOSE AND RULES OF CONSTRUCTION

The goal of the Federal Highway Administration (FHWA) is to encourage all States to ultimately adopt motor carrier safety and hazardous materials transportation rules and regulations identical in all respects to those requirements set forth in Federal laws and regulations, applicable to both interstate and intrastate commerce. Recognizing that there are circumstances unique to each State which may require special attention in that particular State, FHWA has concluded that certain circumstances may warrant limited deviations from the Federal standards where the Federal regulations do not apply.

The purpose of this appendix is to set forth the limits within which a State's deviations to variances in adopting motor carrier safety and hazardous materials rules may extend and still be considered compatible for funding purposes under 49 CFR 350. These limits or tolerances are applicable for this purpose to those State rules and regulations applicable where the U.S. Department of Transportation does not have jurisdiction.

2. TOLERANCE GUIDELINES FOR STATE RULES AND REGULATIONS WHERE THE U.S. DEPARTMENT OF TRANSPORTATION ALSO HOLDS JURISDICTION

(a) States shall not be required to adopt 49 CFR parts 398, 399, 107, 171.15, 171.16 and 177.807 as applicable to either interstate or intrastate commerce. A State is not required to adopt 49 CFR part 178 only if the State can still enforce the standards contained therein.

(b) State rules must be applicable to the same extent as the Federal Motor Carrier Safety and Hazardous Materials Regulations except where deviation may be allowed by part 355 of this subchapter and this appendix.

3. TOLERANCE GUIDELINES FOR STATE RULES AND REGULATIONS WHERE THE U.S. DEPARTMENT OF TRANSPORTATION REGULATIONS DO NOT APPLY

(a) State rules must be applicable to the same extent as the Federal Motor Carrier Safety and Hazardous Materials Regulations except where deviation may be allowed by parts 350 and 355 of this subchapter and this appendix.

(b) States may exempt from all or part of their regulations commercial motor vehicles with a GVWR of 26,000 pounds or less. However, vehicles with a GVWR of 26,000 pounds or less may not be exempted from either the motor carrier safety regulations or hazardous materials regulations if the vehicle is used to transport hazardous materials requiring a placard or if the vehicle is designed to transport more than 15 passengers, including the driver.

(c) States may not exempt from regulation motor carriers based on the type of carriage being performed (i.e., for-hire, private, etc.).

(d) Exemptions granted to certain industries by a State prior to April 1988 and accepted by FHWA may remain valid. Although industry exemptions are strongly discouraged, a State may request and FHWA may approve such an exemption after the State has submitted to the FHWA documentation which will allow evaluation of the following or similar information:

(1) Type and scope of the industry exemption requested;

(2) Type and scope of regulatory exemption requested;

(3) Accident information related to that specific industry—ratio, frequency, comparative figures, etc.;

(4) Percentage of industry affected—number of vehicles, mileage traveled, number of companies involved, etc.;

(5) Inspection information—number of violations per inspection, out-of-service information, etc.;

(6) Other regulations enforced by other State agencies not participating in the MCSAP;

(7) Commodity transported—i.e., hazardous materials, livestock, grain, etc.;

(8) Similar exemptions granted;

(9) Reason exemption is needed;

(10) Projected effect on safety;

(11) The State's economic environment and its ability to compete in foreign and domestic markets.

(e) Regulatory exemptions based on the distance a motor carrier or driver operates from their home terminal are not deemed to be compatible. This prohibition does not apply to those exemptions already contained in the Federal Motor Carrier Safety Regulations nor to the extension of the mileage radius exemption contained in 49 CFR 395.1(e) from 100 to 150 miles.

(f) States are strongly encouraged to apply the identical regulatory and enforcement schemes to both interstate and intrastate carriers as set forth in the Federal Motor Carrier Safety Regulations when regulating drivers' hours of service. However, certain limited tolerances where the U.S. Department of Transportation's hours of service regulations do not apply are allowed. Specifically, an expansion of the 10-hour driving rule to a 12-hour driving limit, provided that the total period of time spent driving and on duty not driving is not extended to more than 16 hours and an increase in the 70 hour rule to 70 hours in 7 consecutive days or 80 hours in 8 consecutive days will be considered compatible.

(g) Drivers operating not subject to the jurisdiction of the U.S. Department of Transportation may drive if they are at least 18 years old.

(h) States may provide grandfather clauses in their rules and regulations if such exemptions are uniform or in substantial harmony with the Federal standards and provide an orderly transition to full regulatory adoption at a later date.

(i) The States may qualify any driver engaged wholly in intrastate commerce who is adversely affected by current State medical standards, upgraded to be consistent with part 391, even if the States adopted those medical standards in the past. Drivers identified through July 29, 1996, as not meeting the upgraded State standards may also be qualified. Such a driver may remain qualified after July 29, 1996, as long as an examining physician determines during the biennial medical examination that existing medical or physical conditions that would otherwise render the driver not qualified under Federal standards have not significantly worsened or another non-qualifying medical or physical condition has not developed.

(j) States whose rules and regulations do not meet these guidelines may still be considered qualified for participation under §350.21. However, their formula allocations for basic grant funds will be subject to the limitations of §350.21 (d).

It should be noted that the FHWA still considers the physical qualification requirements in part 391 to be the minimum requirements that contribute significantly to commercial motor vehicle operational safety. The FHWA continues to encourage States to adopt these minimum standards as their own and to use this grandfathering option judiciously to respond to legitimate hardships. This policy should in no way be interpreted as discrediting the medical standards adopted in part 391.

This guideline will not preclude a State's adoption of or continuation of a waiver program which can be demonstrated to be based on sound medical judgment combined with appropriate performance standards causing no adverse affect on safety.

[57 FR 40956, Sept. 8, 1992, as amended at 58 FR 33776, June 21, 1993; 58 FR 40600, July 29, 1993; 59 FR 5264, Feb. 3, 1994; 60 FR 38743, July 28, 1995]

PART 355—COMPATIBILITY OF STATE LAWS AND REGULATIONS AFFECTING INTERSTATE MOTOR CARRIER OPERATIONS

Subpart A—General Applicability and Definitions

Sec.
355.1 Purpose.
355.3 Applicability.
355.5 Definitions.

Subpart B—Requirements

355.21 Regulatory review.
355.23 Submission of results.
355.25 Adopting and enforcing compatible laws and regulations.

APPENDIX A TO PART 355—GUIDELINES FOR THE REGULATORY REVIEW

AUTHORITY: 49 U.S.C. 504 and 31101 *et seq.*; 49 CFR 1.48.

SOURCE: 57 FR 40962, Sept. 8, 1992, unless otherwise noted.

Subpart A—General Applicability and Definitions

§ 355.1 Purpose.

(a) To promote adoption and enforcement of State laws and regulations pertaining to commercial motor vehicle safety that are compatible with appropriate parts of the Federal Motor Carrier Safety Regulations.

(b) To provide guidelines for a continuous regulatory review of State laws and regulations.

(c) To establish deadlines for States to achieve compatibility with appropriate parts of the Federal Motor Carrier Safety Regulations with respect to interstate commerce.

§ 355.3 Applicability.

These provisions apply to any State that adopts or enforces laws or regulations pertaining to commercial motor vehicle safety in interstate commerce.

§ 355.5 Definitions.

Unless specifically defined in this section, terms used in this part are subject to the definitions in 49 CFR 390.5.

Compatible or *compatibility* means, in relation to State laws and regulations pertaining to commercial motor vehicle safety, having the same effect as the Federal Motor Carrier Safety Regulations in that those State laws and regulations are either identical or fall within the guidelines in appendix C of part 350.

Federal Motor Carrier Safety Regulations means those safety regulations which are contained in parts 390, 391, 392, 393, 395, 396, and 397 of this subchapter.

State means a State of the United States and the District of Columbia.

Subpart B—Requirements

§ 355.21 Regulatory review.

(a) *General.* Each State shall annually analyze its laws and regulations, including those of its political subdivisions, which pertain to commercial motor vehicle safety to determine whether its laws and regulations are compatible with the Federal Motor Carrier Safety Regulations. Guidelines for the regulatory review are provided in the appendix to this part.

(b) *Responsibility.* The State agency designated as lead agency for the administration of grants made pursuant to part 350 of this subchapter is responsible for reviewing and analyzing State laws and regulations for compliance with this part. In the absence of an officially designated Motor Carrier Safety Assistance Program (MCSAP) lead agency or in its discretion, the State shall designate another agency responsible to review and determine compliance with these regulations.

(c) *State review.* (1) The State shall determine which of its laws and regulations pretaining to commercial motor vehicle safety are the same as the Federal Motor Carrier Safety or Federal Hazadous Materials Regulations. With respect to any State law or regulation which is not the same, the State shall

identify such law or regulation and determine whether:

(i) It has the same effect as a corresponding section of the Federal Motor Carrier Safety or Federal Hazardous Materials Regulations;

(ii) It applies to interstate commerce;

(iii) It is more stringent than the FMCSR or FHMR in that it is more restrictive or places a greater burden on any entity subject to its provisions;

(2) If the inconsistent State law or regulation applies to interstate commerce and is more stringent than the FMCSR or FHMR, the State shall determine:

(i) The safety benefits associated with such State law or regulation; and

(ii) The effect of the enforcement of such State law or regulation on interstate commerce.

(3) If the inconsistent State law or regulation does not apply to interstate commerce or is less stringent than the FMCSR or FHMR, the tolerance guidelines for participation in the Motor Carrier Safety Assistance Program in part 350 of this subchapter shall apply.

§ 355.23 Submission of results.

Each State shall submit the results of its regulatory review annually with its certification of compliance under 49 CFR 350.15. It shall submit the results of the regulatory review with the certification no later than August 1 of each year with the SEP. The State shall include copies of pertinent laws and regulations.

§ 355.25 Adopting and enforcing compatible laws and regulations.

(a) *General.* No State shall have in effect or enforce any State law or regulation pertaining to commercial motor vehicle safety in interstate commerce which the Administrator finds to be incompatible with the provisions of the Federal Motor Carrier Safety Regulations.

(b) *New state requirements.* No State shall implement any changes to a law or regulation which makes that or any other law or regulation incompatible with a provision of the Federal Motor Carrier Safety Regulations.

(c) *Enforcement.* To enforce compliance with this section, the Administrator will initiate a rulemaking proceeding under part 389 of this subchapter to declare the incompatible State law or regulation pertaining to commercial motor vehicle safety unenforceable in interstate commerce.

(d) *Waiver of determination.* Any person (including any State) may petition for a waiver of a determination made under paragraph (c) of this section. Such petition will also be considered in a rulemaking proceeding under part 389. Waivers shall be granted only upon a satisfactory showing that continued enforcement of the incompatible State law or regulation is not contrary to the public interest and is consistent with the safe operation of commercial motor vehicles.

(e) *Consolidation of proceedings.* The Administrator may consolidate any action to enforce this section with other proceedings required under this section if the Administrator determines that such consolidation will not adversely affect any party to any such proceeding.

APPENDIX A TO PART 355—GUIDELINES FOR THE REGULATORY REVIEW

Each State shall review its laws and regulations to achieve compatibility with the Federal Motor Carrier Safety Regulations (FMCSRs). Each State shall consider all related requirements on enforcement of the State's motor carrier safety regulations. The documentation shall be simple and brief.

SCOPE

The State review required by § 355.21 may be limited to those laws and regulations previously determined to be incompatible in the report of the Commercial Motor Vehicle Safety Regulatory Review Panel issued in August 1990, or by subsequent determination by the Administrator under this part, *and* any State laws or regulations enacted or issued after August 1990.

APPLICABILITY

The requirements must apply to all segments of the motor carrier industry common, contract, and private carriers of property and for-hire carriers of passengers.

DEFINITIONS

Definitions of terms must be consistent with those in the FMCSR. For example, a commercial motor vehicle is a vehicle operating in interstate commerce on a public highway, that:

(1) Has a gross vehicle weight rating (GVWR) of 4,537 or more kilograms;

(2) Is designed to transport more that 15 passengers (including the driver); or

(3) Is used to transport hazardous materials in a quantity requiring placarding under regulations issued by the Secretary under the Hazardous Materials Transportation Act, as amended (49 U.S.C. 5101 *et seq.*).

DRIVER QUALIFICATIONS

Require a driver to be properly licensed to drive a commercial motor vehicle; require a driver to be in good physical health, at least 21 years of age, able to operate a vehicle safely, and maintain a good driving record; prohibit drug and alcohol abuse; require a motor carrier to maintain a driver qualification file for each driver; and require a motor carrier to ensure that a driver is medically qualified.

NOTE: The requirements for testing apply only to drivers of commercial motor vehicles as defined in 49 CFR part 383.

DRIVING OF MOTOR VEHICLES

Prohibit possession, use, or driving under the influence of alcohol or other controlled substances (while on duty); and establish 0.04 percent as the level of alcohol in the blood at which a driver is considered under the influence of alcohol.

PARTS AND ACCESSORIES NECESSARY FOR SAFE OPERATION

Require operational lights and reflectors; require systematically arranged and installed wiring; and require brakes working at the required performance level, and other key components included in 49 CFR part 393.

HOURS OF SERVICE

Prohibit a motor carrier from allowing or requiring any driver to drive: More than 10 hours following 8 consecutive hours off duty; after being on duty 15 hours, after being on duty more than 60 hours in any 7 consecutive days; or after being on duty more than 70 hours in any 8 consecutive days.

Require a driver to prepare a record-of-duty status for each 24-hour period. The driver and motor carrier must retain the records.

INSPECTION AND MAINTENANCE

Prohibit a commercial motor vehicle from being operated when it is likely to cause an accident or a breakdown; require the driver to conduct a walk-around inspection of the vehicle before driving it to ensure that it can be safely operated; require the driver to prepare a driver vehicle inspection report; and require commercial motor vehicles to be inspected at least annually.

HAZARDOUS MATERIALS

Require a motor carrier or a person operating a commercial motor vehicle transporting hazardous materials to follow the safety and hazardous materials requirements.

STATE DETERMINATIONS

1. Each State must determine whether its requirements affecting interstate motor carriers are ''less stringent'' than the Federal requirements. ''Less stringent'' requirements represent either gaps in the State requirements in relation to the Federal requirements as summarized under item number one in this appendix or State requirements which are less restrictive than the Federal requirements.

a. An example of a gap is when a State does not have the authority to regulate the safety of for-hire carriers of passengers or has the authority but chooses to exempt the carrier.

b. An example of a less restrictive State requirement is when a State allows a person under 21 years of age to operate a commercial motor vehicle in interstate commerce.

2. Each State must determine whether its requirements affecting interstate motor carriers are ''more stringent'' than the Federal requirements: ''More stringent'' requirements are more restrictive or inclusive in relation to the Federal requirements as summarized under item number one in this appendix. For example, a requirement that a driver must have 2 days off after working 5 consecutive days. The State would demonstrate that its more stringent requirements:

a. Have a ''safety benefit;'' for example, result in fewer accidents or reduce the risk of accidents;

b. do not create ''an undue burden on interstate commerce,'' e.g., do not delay, interfere with, or increase that cost or the administrative burden for a motor carrier transporting property or passengers in interstate commerce; and

c. Are otherwise compatible with Federal safety requirements.

3. A State must adopt and enforce in a consistent manner the requirements referenced in the above guidelines in order for the FHWA to accept the State's determination that it has compatible safety requirements affecting interstate motor carrier operations. Generally, the States would have up to 3 years from the effective date of the new Federal requirement to adopt and enforce compatible requirements. The FHWA would specify the deadline when promulgating future Federal safety requirements. The requirements are considered of equal importance.

[57 FR 40962, Sept. 8, 1992, as amended by 58 FR 33776, June 21, 1993; 62 FR 37151, July 11, 1997]

PART 356—MOTOR CARRIER ROUTING REGULATIONS

Sec.
356.1 Authority to serve a particular area—construction.
356.3 Regular route motor passenger service.
356.5 Traversal authority.
356.7 Tacking.
356.9 Elimination of routing restrictions—regular route carriers.
356.11 Elimination of gateways—regular and irregular route carriers.
356.13 Redesignated highways.

AUTHORITY: 49 U.S.C. 13301 and 13902; 5 U.S.C. 553; 49 CFR 1.48.

SOURCE: 62 FR 32041, June 12, 1997, unless otherwise noted.

§ 356.1 Authority to serve a particular area—construction.

(a) *Service at municipality.* A motor carrier of property, motor passenger carrier of express, and freight forwarder authorized to serve a municipality may serve all points within that municipality's commercial zone not beyond the territorial limits, if any, fixed in such authority.

(b) *Service at unincorporated community.* A motor carrier of property, motor passenger carrier of express, and freight forwarder, authorized to serve an unincorporated community having a post office of the same name, may serve all points in the United States not beyond the territorial limits, if any, fixed in such authority, as follows:

(1) All points within 3 miles of the post office in such unincorporated community if it has a population of less than 2,500; within 4 miles if it has a population of 2,500 but less than 25,000; and within 6 miles if it has a population of 25,000 or more;

(2) At all points in any municipality any part of which is within the limits described in paragraph (b)(1) of this section; and

(3) At all points in any municipality wholly surrounded, or so surrounded except for a water boundary, by any municipality included under the terms of paragraph (b)(2) of this section.

§ 356.3 Regular route motor passenger service.

(a) A motor common carrier authorized to transport passengers over regular routes may serve:

(1) All points on its authorized route;

(2) All municipalities wholly within one airline mile of its authorized route;

(3) All unincorporated areas within one airline mile of its authorized route; and

(4) All military posts, airports, schools, and similar establishments that may be entered within one airline mile of its authorized route, but operations within any part of such establishment more than one airline mile from such authorized route may not be over a public road.

(b) This section does not apply to those motor passenger common carriers authorized to operate within:

(1) New York, NY;

(2) Rockland, Westchester, Orange, or Nassau Counties, NY;

(3) Fairfield County, CT; and

(4) Passaic, Bergen, Essex, Hudson, Union, Morris, Somerset, Middlesex, or Monmouth Counties, NJ.

§ 356.5 Traversal authority.

(a) *Scope.* An irregular route motor carrier may operate between authorized service points over any reasonably direct or logical route unless expressly prohibited.

(b) *Requirements.* Before commencing operations, the carrier must, regarding each State traversed:

(1) Notify the State regulatory body in writing, attaching a copy of its operating rights;

(2) Designate a process agent; and

(3) Comply with 49 CFR 387.315.

§ 356.7 Tacking.

Unless expressly prohibited, a motor common carrier of property holding separate authorities which have common service points may join, or *tack*, those authorities at the common point, or *gateway*, for the purpose of performing through service as follows:

(a) Regular route authorities may be tacked with one another;

(b) Regular route authority may be tacked with irregular route authority;

(c) Irregular route authorities may be tacked with one another if the authorities were granted pursuant to application filed on or before November 23, 1973, and the distance between the points at which service is provided, when measured through the gateway point, is 300 miles or less; and

(d) Irregular route authorities may be tacked with one another if the authorities involved contain a specific provision granting the right to tack.

§ 356.9 Elimination of routing restrictions—regular route carriers.

(a) *Regular route authorities—construction.* All certificates that, either singly or in combination, authorize the transportation by a motor common carrier of property over:

(1) A single regular route or;

(2) Over two or more regular routes that can lawfully be tacked at a common service point, shall be construed as authorizing transportation between authorized service points over any available route.

(b) *Service at authorized points.* A common carrier departing from its authorized service routes under paragraph (a) of this section shall continue to serve points authorized to be served on or in connection with its authorized service routes.

(c) *Intermediate point service.* A common carrier conducting operations under paragraph (a) of this section may serve points on, and within one airline mile of, an alternative route it elects to use if all the following conditions are met:

(1) The carrier is authorized to serve all intermediate points (without regard to nominal restrictions) on the underlying service route;

(2) The alternative route involves the use of a superhighway (i.e., a limited access highway with split-level crossings);

(3) The alternative superhighway route, including highways connecting the superhighway portion of the route with the carrier's authorized service route,

(i) Extends in the same general direction as the carrier's authorized service route and

(ii) Is wholly within 25 airline miles of the carrier's authorized service route; and

(4) Service is provided in the same manner as, and subject to any restrictions that apply to, service over the authorized service route.

§ 356.11 Elimination of gateways—regular and irregular route carriers.

A motor common carrier of property holding separate grants of authority (including regular route authority), one or more of which authorizes transportation over irregular routes, where the authorities have a common service point at which they can lawfully be tacked to perform through service, may perform such through service over any available route.

§ 356.13 Redesignated highways.

Where a highway over which a regular route motor common carrier of property is authorized to operate is assigned a new designation, such as a new number, letter, or name, the carrier shall advise the FHWA by letter, and shall provide information concerning the new and the old designation, the points between which the highway is redesignated, and each place where the highway is referred to in the carrier's authority. The new designation of the highway will be shown in the carrier's certificate when the FHWA has occasion to reissue it.

PART 365—RULES GOVERNING APPLICATIONS FOR OPERATING AUTHORITY

Subpart A—How to Apply for Operating Authority

Sec.

365.101 Applications governed by these rules.
365.103 Modified procedure.
365.105 Starting the application process: Form OP–1.
365.107 Types of applications.
365.109 Commission review of the application.
365.111 Appeals to rejections of the application.
365.113 Changing the request for authority or filing supplementary evidence after the application is filed.

365.115 After publication in the ICC Register.
365.117 Obtaining a copy of the application.
365.119 Opposed applications.
365.121 Filing a reply statement.
365.123 Applicant withdrawal.

Subpart B—How to Oppose Requests for Authority

365.201 Definitions.
365.203 Time for filing.
365.205 Contents of the protest.
365.207 Withdrawal.

Subpart C—General Rules Governing the Application Process

365.301 Applicable rules.
365.303 Contacting another party.
365.305 Serving copies of pleadings.
365.307 Replies to motions.
365.309 FAX filings.

Subpart D—Transfer of Operating Rights Under 49 U.S.C. 10926

365.401 Scope of rules.
365.403 Definitions.
365.405 Applications.
365.407 Notice.
365.409 Commission action and criteria for approval.
365.411 Responsive pleadings.
365.413 Procedures for changing the name or business form of a motor or water carrier, household goods freight forwarder, or property broker.

AUTHORITY: 5 U.S.C. 553 and 559; 16 U.S.C. 1456; 49 U.S.C. 13101, 13301, 13901–13906, 14708, 31138, and 31144; 49 CFR 1.48.

SOURCE: 59 FR 63728, Dec. 9, 1994, unless otherwise noted. Redesignated at 61 FR 54707, Oct. 21, 1996.

Subpart A—How to Apply for Operating Authority

§ 365.101 Applications governed by these rules.

These rules govern the handling of applications for operating authority of the following type:

(a) Applications for certificates and permits to operate as a motor common or contract carrier of property or passengers.

(b) Applications for permits to operate as a household goods freight forwarder.

(c) Applications for certificates, permits, and exemptions for water carrier transportation of property and passengers.

(d) Applications for licenses to operate as a broker of motor vehicle transportation.

(e) Applications for certificates under 49 U.S.C. 13902(b)(3) to operate as a motor common carrier of passengers in intrastate commerce on a route over which applicant holds interstate authority as of November 19, 1982.

(f) Applications for certificates under 49 U.S.C. 13902(b)(3) to operate as a motor common carrier of passengers in intrastate commerce on a route over which applicant has been granted or will be granted interstate authority after November 19, 1982.

(g) Applications for temporary motor and water carrier authority.

(h) Applications for Mexican carriers to operate in foreign commerce as common, contract or private motor carriers of property (including exempt items) between the U.S./Mexico border, and points in California, Arizona, New Mexico and Texas.

[59 FR 63728, Dec. 9, 1994, as amended at 60 FR 63981, Dec. 13, 1995; 62 FR 49940, Sept. 24, 1997]

§ 365.103 Modified procedure.

The Commission will handle licensing application proceedings using the modified procedure, if possible. The applicant and protestants send statements made under oath (verified statements) to each other and to the ICC. There are no personal appearances or formal hearings.

§ 365.105 Starting the application process: Form OP–1.

(a) All applicants shall file the appropriate form in the OP–1 series, effective January 1, 1995. Form OP–1 for motor property carriers and brokers of general freight and household goods; Form OP–1(P) for motor passenger carriers; Form OP–1 (FF) for freight forwarders of household goods; Form OP–1(W) for water carriers and Form OP–1MX for Mexican motor property carriers. A separate filing fee in the amount at 49 CFR 1002.2(f) is required for each type of authority sought in each transportation mode.

(b) Obtain the form at Commission regional and field offices, or call the

Commission's automated response number at (202) 927–7600.

[59 FR 63728, Dec. 9, 1994, as amended at 60 FR 63981, Dec. 13, 1996]

§ 365.107 Types of applications.

(a) Fitness applications. Motor property applications and certain types of motor passenger applications require only the finding that the applicant is fit, willing and able to perform the involved operations and to comply with all applicable statutory and regulatory provisions. These applications can be opposed only on the grounds that applicant is not fit [*e.g.*, is not in compliance with applicable financial responsibility and safety fitness requirements]. These applications are:

(1) Motor common and contract carrier of property (except household goods) , Mexican motor property carriers that perform private carriage and transport exempt items, and motor contract carrier of passengers transportation.

(2) Motor carrier brokerage of general commodities (except household goods).

(3) Certain types of motor passenger applications as described in Form OP–1 (P).

(b) Motor passenger ''public interest'' applications as described in Form OP–1 (P).

(c) Intrastate motor passenger applications under 49 U.S.C. 13902(b)(3) as described in Form OP–1, Schedule B.

(d) Motor common carrier of household goods applications, including Mexican carrier applicants. These applications require a finding that:

(1) The applicant is fit, willing, and able to provide the involved transportation and to comply with all applicable statutory and regulatory provisions; and

(2) The service proposed will serve a useful public purpose, responsive to a public demand or need.

(e) Motor contract carrier of household goods, water contract carrier, household goods property broker, and household goods freight forwarder applications. These applications require a finding that:

(1) The applicant is fit, willing, and able to provide the involved transportation and to comply with all applicable statutory and regulatory provisions; and

(2) The transportation to be provided will be consistent with the public interest and the national transportation policy of 49 U.S.C. 13101.

(f) Water common carrier applications. These applications require a finding that:

(1) The applicant is fit, willing, and able to provide the involved transportation and to comply with all applicable statutory and regulatory provisions; and

(2) The transportation to be provided is or will be required by present or future public convenience and necessity.

(g) Temporary authority (TA) for motor and water carriers. These applications require a finding that there is or soon will be an immediate transportation need that cannot be met by existing carrier service.

NOTE: In view of the expedited time frames established in this part for processing requests for permanent authority, applications for TA will be entertained *only* in exceptional circumstances (*i.e.*, natural disasters or national emergencies) when evidence of immediate service need can be specifically documented in a narrative supplement appended to Form OP–1 for motor property carriers, Form OP–1MX for Mexican property carriers, Form OP–1(P) for motor passenger carriers, and Form OP–1(W) for water carriers. TA applications must be filed with the Regional Office which has jurisdiction over the area in which applicant's headquarters are located. Initial determinations of TA applications will be made by a Regional Motor Carrier Board.

[59 FR 63728, Dec. 9, 1994, as amended at 60 FR 63981, Dec. 13, 1995; 62 FR 49940, Sept. 24, 1997]

§ 365.109 Commission review of the application.

(a) ICC staff will review the application for correctness, completeness, and adequacy of the evidence (the *prima facie* case).

(1) Minor errors will be corrected without notification to the applicant.

(2) Materially incomplete applications will be rejected. Applications that are in substantial compliance with these rules may be accepted.

(3) All motor carrier applications will be reviewed for consistency with the

Commission's operational safety fitness policy. Applicants with ''Unsatisfactory'' safety fitness ratings from DOT will have their applications rejected.

(4) An employee board of the Commission appointed under § 1011.6(g) will review completed applications that conform with the Commission's safety fitness policy and that are accompanied by evidence of adequate financial responsibility.

(5) Financial responsibility is indicated by filing within 20 days from the date an application notice is published in the ICC Register:

(i) *Form BMC–91 or 91X or BMC 82 surety bond*—Bodily injury and property damage (motor property and passenger carriers; household goods freight forwarders that provide pickup or delivery service directly or by using a local delivery service under their control).

(ii) *Form BMC–84*—Surety bond or Form BMC–85—trust fund agreement (property brokers of general commodities and household goods).

(iii) *Form BMC–34 or BMC 83 surety bond*—Cargo liability (motor property common carriers and household goods freight forwarders).

(6) Applicants also must submit Form BOC–3—designation of legal process agents—within 20 days from the date an application notice is published in the *ICC Register*.

(7) Applicants seeking to conduct operations for which tariffs are required may not commence such operations until tariffs are on file with the Commission and in effect.

(8) All applications must be completed in English.

(b) A summary of the application will be published as a preliminary grant of authority in the *ICC Register* to give notice to the public in case anyone wishes to oppose the application.

[59 FR 63728, Dec. 9, 1994, as amended at 60 FR 63981, Dec. 13, 1995]

§ 365.111 Appeals to rejections of the application.

(a) An applicant has the right to appeal rejection of the application. The appeal must be filed at the Commission within 10 days of the date of the letter of rejection.

(b) If the appeal is successful and the filing is found to be proper, the application shall be deemed to have been properly filed as of the decision date of the appeal.

§ 365.113 Changing the request for authority or filing supplementary evidence after the application is filed.

(a) Once the application is filed, the applicant may supplement evidence only with approval of the Commission.

(b) Amendments to the application generally are not permitted, but in appropriate instances may be entertained at the discretion of the Commission.

§ 365.115 After publication in the ICC Register.

(a) Interested persons have 10 days from the date of *ICC Register* publication to file protests. See Subpart B of this part.

(b) If no one opposes the application, the grant published in the *ICC Register* will become effective by issuance of a certificate, permit, or license.

§ 365.117 Obtaining a copy of the application.

After publication, interested persons may request a copy of the application by contacting the Commission-designated contract agent (as identified in the *ICC Register*), Room 2229, Interstate Commerce Commission Building.

§ 365.119 Opposed applications.

If the application is opposed, opposing parties are required to send a copy of their protest to the applicant.

§ 365.121 Filing a reply statement.

(a) If the application is opposed, applicant may file a reply statement. This statement is due within 20 days after *ICC Register* publication.

(b) The reply statement may not contain new evidence. It shall only rebut or further explain matters previously raised.

(c) The reply statement need not be notarized or verified. Applicant understands that the oath in the application form applies to all evidence submitted in the application. Separate legal arguments by counsel need not be notarized or verified.

§ 365.123 Applicant withdrawal.

If the applicant wishes to withdraw an application, it shall request dismissal in writing.

Subpart B—How to Oppose Requests For Authority

§ 365.201 Definitions.

A person wishing to oppose a request for permanent authority files a *protest*. A person filing a valid protest becomes a *protestant*.

§ 365.203 Time for filing.

A protest shall be filed (received at the Commission) within 10 days after notice of the application appears in the *ICC Register*. A copy of the protest shall be sent to applicant's representative at the same time. Failure timely to file a protest waives further participation in the proceeding.

§ 365.205 Contents of the protest.

(a) All information upon which the protestant plans to rely is put into the protest.

(b) A protest must be verified, as follows:

I, _____, verify under penalty of perjury under laws of the United States of America, that the information above is true and correct. Further, I certify that I am qualified and authorized to file this protest. (*See* 18 U.S.C. 1001 and 18 U.S.C. 1621 for penalties.)

(Signature and Date)

(c) A protest not in substantial compliance with applicable statutory standards or these rules may be rejected.

(d) Protests must respond directly to the statutory standards for Commission review of the application. As these standards vary for particular types of applications, potential protestants should refer to the general criteria addressed at § 365.107 of this part and may consult the Commission at (202) 927–7600 for further assistance in developing their evidence.

[59 FR 63728, Dec. 9, 1994. Redesignated at 61 FR 54707, Oct. 21, 1996, as amended at 62 FR 49940, Sept. 24, 1997]

§ 365.207 Withdrawal.

A protestant wishing to withdraw from a proceeding shall inform the Commission and applicant in writing.

Subpart C—General Rules Governing the Application Process

§ 365.301 Applicable rules.

Generally, all application proceedings are governed by the Commission's Rules of Practice at 49 CFR parts 1100–1105 and 1112–1117, except as designated below.

§ 365.303 Contacting another party.

When a person wishes to contact a party or serve a pleading or letter on that party, it shall do so through its representative. The phone and FAX numbers and address of applicant's representative shall be listed in the *ICC Register*.

§ 365.305 Serving copies of pleadings.

(a) An applicant must serve all pleadings and letters on the Commission and all known participants in the proceeding, except that a reply to a motion need only be served on the moving party.

(b) A protestant need serve only the Commission and applicant with pleadings or letters.

§ 365.307 Replies to motions.

Replies to motions filed under this part are due within 5 days of the date the motion is filed at the Commission.

§ 365.309 FAX filings.

FAX filings of applications and supporting evidence are not permitted. To assist parties in meeting the expedited time frames established for protesting an application, however, the Commission will accept FAX filings of protests and any reply or rebuttal evidence. FAX filings of these pleadings must be followed by the original document, plus one copy for Commission recordkeeping purposes.

Subpart D—Transfer of Operating Rights Under 49 U.S.C. 10926

AUTHORITY: 5 U.S.C. 553, and 49 U.S.C. 10321 and 10926.

SOURCE: 53 FR 4852, Feb. 18, 1988, unless otherwise noted. Redesignated at 61 FR 54707, Oct. 21, 1996.

§ 365.401 Scope of rules.

These rules define the procedures that enable motor passenger and property carriers, water carriers, property brokers, and household goods freight forwarders to obtain approval from the Interstate Commerce Commission to merge, transfer, or lease their operating rights in financial transactions not subject to 49 U.S.C. 11343. Transactions covered by these rules are governed by 49 U.S.C. 10321 and 10926. The filing fee is set forth at 49 CFR 1002.2(f)(25).

§ 365.403 Definitions.

For the purposes of this part, the following definitions apply:

(a) *Transfer.* Transfers include all transactions (*i.e.*, the sale or lease of interstate operating rights,[1] or the merger of two or more carriers or a carrier into a noncarrier) subject to 49 U.S.C. 10926, as well as the sale of property brokers' licenses under 49 U.S.C. 10321.

(b) *Operating rights.* Operating rights include:

(1) Certificates and permits issued to motor and water carriers;

(2) Permits issued to household goods freight forwarders;

(3) Licenses issued to property brokers; and

(4) Certificates of Registration issued to motor carriers. The term also includes authority held by virtue of the gateway elimination regulations published in the FEDERAL REGISTER as letter-notices.

(c) *Certificate of registration.* The evidence of a motor carrier's right to engage in interstate or foreign commerce within a single State is established by a corresponding State certificate.

(d) *Person.* An individual, partnership, corporation, company, association, or other form of business, or a trustee, receiver, assignee, or personal representative of any of these.

(e) *Record holder.* The person shown on the records of the Commission as the legal owner of the operating rights.

(f) *Control.* A relationship between persons that includes actual control, legal control, and the power to exercise control, through or by common directors, officers, stockholders, a voting trust, a holding or investment company, or any other means.

(g) *Category 1 transfers.* Transactions in which the person to whom the operating rights would be transferred is not an ICC carrier and is not affiliated with any ICC carrier.

(h) *Category 2 transfers.* Transactions in which the person to whom the operating rights would be transferred is an ICC carrier and/or is affiliated with an ICC carrier.

§ 365.405 Applications.

(a) *Procedural requirements.* (1) At least 10 days before consummation, an original and two copies of a properly completed Form OP–FC–1 and any attachments (*see* paragraph (b)(1)(viii) of this section) must be filed with the Office of the Secretary, Applications and Fees Unit, Interstate Commerce Commission, Washington, DC 20423. The original must show that an additional copy has been furnished to the Commission's Regional Director for the Region(s) in which the applicants' headquarters are located. The nonrefundable filing fee prescribed by 49 CFR 1002.2(f)(25) must accompany the application.

(2) At any time after the expiration of the 10-day waiting period, applicants may consummate the transaction, subject to the subsequent approval of the application by the Commission, as described below. The transferee may commence operations under the rights acquired from the transferor upon its compliance with the Commission's regulations governing insurance, tariffs (if applicable), and process agents. *See* 49 CFR parts 387, subpart C, 1312 and 366,

[1] The execution of a chattel mortgage, deed of trust, or other similar document does not constitute a transfer or require the Commission's approval. However, a foreclosure for the purpose of transferring an operating right to satisfy a judgment or claim against the record holder may not be effected without approval of the Commission.

respectively. In addition, contract carriers must comply with the Commission's regulations concerning contracts at 49 CFR part 1053. In the alternative, applicants may wait until the Commission has issued a decision on their application before transferring the operating rights. If the transferee wants the transferor's operating authority to be reissued in its name, it should furnish the Commission with a statement executed by both transferor and transferee indicating that the transaction has been consummated. Authority will not be reissued until after the Commission has approved the transaction.

(b) *Information required.* (1) In category 1 and category 2 transfers, applicants must furnish the following information:

(i) Full name, address, and signatures of the transferee and transferor.

(ii) A copy of that portion of the transferor's operating authority involved in the transfer proceeding.

(iii) A short summary of the essential terms of the transaction.

(iv) If relevant, the status of proceedings for the transfer of State certificate(s) corresponding to the Certificates of Registration being transferred.

(v) A statement as to whether the transfer will or will not significantly affect the quality of the human environment.

(vi) Certification by transferor and transferee of their current respective safety ratings by the United States Department of Transportation (*i.e.,* satisfactory, conditional, unsatisfactory, or unrated).

(vii) Certification by the transferee that it has sufficient insurance coverage under 49 U.S.C. 13906 for the service it intends to provide.

(viii) Information to demonstrate that the proposed transaction is consistent with the national transportation policy and satisfies the criteria for approval set forth at § 365.409 of this part. (Such information may be appended to the application form and, if provided, would be embraced by the oath and verification contained on that form.)

(ix) If motor carrier operating rights are being transferred, certification by the transferee that it is not domiciled in Mexico nor owned or controlled by persons of that country.

(2) Category 2 applicants must also submit the following additional information:

(i) Name(s) of the carrier(s), if any, with which the transferee is affiliated.

(ii) Aggregate revenues of the transferor, transferee, and their carrier affiliates from interstate transportation sources for a 1-year period ending not earlier than 6 months before the date of the agreement of the parties concerning the transaction. If revenues exceed $2 million, the transfer may be subject to 49 U.S.C. 14303 rather than these rules.

[53 FR 4852, Feb. 18, 1988, as amended at 54 FR 35343, Aug. 25, 1989; 62 FR 49940, Sept. 24, 1997]

§ 365.407 Notice.

The Commission will give notice of approved transfer applications through publication in the *ICC Register.*

§ 365.409 Commission action and criteria for approval.

A transfer will be approved under this section if:

(a) The transaction is not subject to 49 U.S.C. 14303; and

(b) The transaction is consistent with the public interest; however,

(c) If the transferor or transferee has an ''Unsatisfactory'' safety fitness rating from DOT, the transfer may be denied. If an application is denied, the Commission will set forth the basis for its action in a decision or letter notice. If parties with ''Unsatisfactory'' safety fitness ratings consummate a transaction pursuant to the 10-day rule at § 365.405 of this part prior to the notification of Commission action, they do so at their own risk and subject to any conditions we may impose subsequently. Transactions that have been consummated but later are denied by the Commission are null and void and must be rescinded. Similarly, if applications contain false or misleading information, they are void *ab initio.*

[53 FR 4852, Feb. 18, 1988, as amended at 56 FR 46735, Sept. 16, 1991; 62 FR 49940, Sept. 24, 1997]

§365.411 Responsive pleadings.

(a) Protests must be filed within 20 days after the date of publication of an approved transfer application in the *ICC Register*. Protests received prior to the notice will be rejected. Applicants may respond within 20 days after the due date of protests. Petitions for reconsideration of decisions denying applications must be filed within 20 days after the date of service of such decisions.

(b) Protests and petitions for reconsideration must be filed with the Office of the Secretary, Case Control Branch, Interstate Commerce Commission, Washington, DC 20423, and be served on appropriate parties.

§365.413 Procedures for changing the name or business form of a motor or water carrier, household goods freight forwarder, or property broker.

(a) *Scope.* These procedures (and not the transfer rules at 49 CFR parts 365, subpart D, 1182, 1183 and 1186) apply in the following circumstances:

(1) A change in the form of a business, such as the incorporation of a partnership or sole proprietorship;

(2) A change in the legal name of a corporation or partnership or change in the trade name or assumed name of any entity;

(3) A transfer of operating rights from a deceased or incapacitated spouse to the other spouse;

(4) A reincorporation and merger for the purpose of effecting a name change;

(5) An amalgamation or consolidation of a carrier and a noncarrier into a new carrier having a different name from either of the predecessor entities; and

(6) A change in the State of incorporation accomplished by dissolving the corporation in one State and reincorporating in another State.

(b) *Procedures.* To accomplish these changes, a letter must be sent to the Office of the Secretary, Applications and Fees Unit, Interstate Commerce Commission, Washington, DC 20423. The envelope should be marked ''NAME CHANGE''. The applicant must provide:

(1) The docket number(s) and name of the carrier requesting the change;

(2) A copy of the articles of incorporation and the State certificate reflecting the incorporation;

(3) The name(s) of the owner(s) of the stock and the distribution of the shares;

(4) The names of the officers and directors of the corporation; and

(5) A statement that there is no change in the ownership, management, or control of the business. When this procedure is being used to transfer operating rights from a deceased or incapacitated spouse to the other spouse, documentation that the other spouse has the legal right to effect such change must be included with the request. The fee for filing a name change request is in 49 CFR 1002.2(f)(11).

[53 FR 4852, Feb. 18, 1988, as amended at 54 FR 47364, Nov. 14, 1989; 62 FR 49940, Sept. 24, 1997]

PART 366—DESIGNATION OF PROCESS AGENT

Sec.
366.1 Applicability.
366.2 Form of designation.
366.3 Eligible persons.
366.4 Required States.
366.5 Blanket designations.
366.6 Cancellation or change.

AUTHORITY: 49 U.S.C. 13303, 13304, and 14704; 49 CFR 1.48.

SOURCE: 55 FR 11197, Mar. 27, 1990, unless otherwise noted. Redesignated at 61 FR 54707, Oct. 21, 1996.

§366.1 Applicability.

These rules, relating to the filing of designations of persons upon whom court process may be served, govern motor carriers and brokers and, as of the moment of succession, their fiduciaries (as defined at 49 CFR 387.319(a)).

[55 FR 11197, Mar. 27, 1990. Redesignated at 61 FR 54707, Oct. 21, 1996; 62 FR 49940, Sept. 24, 1997]

§366.2 Form of designation.

Designations shall be made on Form BOC–3, *Designation of Agent for Service of Process*. Only one completed current form may be on file. It must include all States for which agent designations are required. One copy must be retained by the carrier or broker at its principal place of business.

§ 366.3 Eligible persons.

All persons (as defined at 49 U.S.C. 13102(16)) designated must reside or maintain an office in the State for which they are designated. If a State official is designated, evidence of his willingness to accept service of process must be furnished.

[55 FR 11197, Mar. 27, 1990. Redesignated at 61 FR 54707, Oct. 21, 1996; 62 FR 49940, Sept. 24, 1997]

§ 366.4 Required States.

(a) *Motor carriers.* Every motor carrier (of property or passengers) shall make a designation for each State in which it is authorized to operate and for each State traversed during such operations. Every motor carrier (including private carriers) operating in the United States in the course of transportation between points in a foreign country shall file a designation for each State traversed.

(b) *Brokers.* Every broker shall make a designation for each State in which its offices are located or in which contracts will be written.

[55 FR 11197, Mar. 27, 1990, as amended at 55 FR 47338, Nov. 13, 1990]

§ 366.5 Blanket designations.

Where an association or corporation has filed with the Commission a list of process agents for each State, motor carriers may make the required designations by using the following statement:

Those persons named in the list of process agents on file with the Interstate Commerce Commission by _____

_____

(Name of association or corporation) and any subsequently filed revisions thereof, for the States in which this carrier is or may be authorized to operate, including States traversed during such operations, except those States for which individual designations are named.

§ 366.6 Cancellation or change.

A designation may be canceled or changed only by a new designation except that, where a carrier or broker ceases to be subject to § 366.4 in whole or in part for 1 year, designation is no longer required and may be canceled without making another designation.

[55 FR 11197, Mar. 27, 1990. Redesignated at 61 FR 54707, Oct. 21, 1996; 62 FR 49940, Sept. 24, 1997]

PART 367—STANDARDS FOR REGISTRATION WITH STATES

Sec.
367.1 Definitions.
367.2 Participation by States.
367.3 Selection of registration State.
367.4 Requirements for registration.
367.5 Registration receipts.
367.6 Registration State accounting.
367.7 Violations unlawful; criminal penalties and civil sanctions.

APPENDIX A TO PART 367—UNIFORM APPLICATION FOR SINGLE STATE REGISTRATION FOR MOTOR CARRIERS REGISTERED WITH THE SECRETARY OF TRANSPORTATION

AUTHORITY: 49 U.S.C. 13301 and 14504; 49 CFR 1.48.

SOURCE: 58 FR 28933, May 18, 1993, unless otherwise noted. Redesignated at 61 FR 54707, Oct. 21, 1996.

§ 367.1 Definitions.

(a) *The Secretary.* The Secretary of Transportation.

(b) *Motor carrier* and *carrier.* A person authorized to engage in the transportation of passengers or property, as a common or contract carrier, in interstate or foreign commerce, under the provisions of 49 U.S.C. 13902.

(c) *Motor vehicle.* A self-propelled or motor driven vehicle operated by a motor carrier in interstate or foreign commerce under authority issued by the Secretary.

(d) *Principal place of business.* A single location that serves as a motor carrier's headquarters and where it maintains or can make available its operational records.

(e) *State.* A State of the United States or the District of Columbia.

[58 FR 28933, May 18, 1993. Redesignated at 61 FR 54707, Oct. 21, 1996, as amended at 62 FR 15420, Apr. 1, 1997]

§ 367.2 Participation by States.

(a) A State is eligible to participate as a registration State and to receive fee revenue only if, as of January 1, 1991, it charged or collected a fee for a

vehicle identification stamp or a number pursuant to the provisions of the predecessor to this part.

(b) An eligible State that intends either to commence or to cease participating in the registration program must publish notice of its intention by the 1st day of July of the year preceding the registration year in which it will commence or cease participating.

§367.3 Selection of registration State.

(a) Each motor carrier required to register and pay filing fees must select a single participating State as its registration State. The carrier must select the State in which it maintains its principal place of business, if such State is a participating State. A carrier that maintains its principal place of business outside of a participating State must select the State in which it will operate the largest number of motor vehicles during the next registration year. In the event a carrier will operate the same largest number of vehicles in more than one State, it must select one of those States.

(b) A carrier may not change its registration State unless it changes its principal place of business or its registration State ceases participating in the program, in which case the carrier must select a registration State for the next registration year under the standards of paragraph (a) of this section.

(c) A carrier must give notice of its selection to the State commission of its selected registration State, and, the State commission of its prior registration State, within 30 days after it has made its selection. If a carrier changes its principal place of business during the annual registration period specified in §367.4(b)(2), the carrier may continue to use its prior registration State, if any, for the next registration year.

(d) A carrier must give notice of its selection to its insurer or insurers as soon as practicable after it has made its selection.

[58 FR 28933, May 18, 1993. Redesignated at 61 FR 54707, Oct. 21, 1996, as amended at 62 FR 15420, Apr. 1, 1997]

§367.4 Requirements for registration.

(a) Except as provided in paragraph (c)(1) of this section with regard to a carrier operating under temporary authority, only a motor carrier holding a certificate or permit issued by the Secretary under 49 U.S.C. 13902 shall be required to register under these standards.

(b) A motor carrier operating in interstate or foreign commerce in one or more participating States under a certificate or permit issued by the Secretary shall be required to register annually with a single registration State, and such registration shall be deemed to satisfy the registration requirements of all participating States.

(1) The registration year will be the calendar year.

(2) A carrier must file its annual registration application between the 1st day of August and the 30th day of November of the year preceding the registration year. A carrier that intends to commence operating during the current registration year may register at any time, but it must do so before it commences operating.

(3) The registration application must be in the form appended to this part and must contain the information and be accompanied by the fees specified in paragraph (c) of this section. There will be no prorating of fees to account for partial year operations.

(4) A carrier that has changed its registration State since its last filing must identify the registration State with which it previously filed.

(c) A motor carrier must file, or cause to be filed, the following with its registration State:

(1) Copies of its certificates and/or permits. A carrier must supplement its filing by submitting copies of any new operating authorities as they are issued. Once a carrier has submitted copies of its authorities, it may thereafter satisfy the filing requirement by certifying that the copies are on file. A carrier may, with the permission of its registration State, submit a summary of its operating authorities in lieu of copies. A carrier granted emergency temporary authority or temporary authority having a duration of 120 days or less is not required to file evidence of such authority, but it must otherwise comply with the requirements of this section;

(2) A copy of its proof of public liability security submitted to and accepted

by the Secretary under 49 CFR part 387, subpart C or a copy of an order of the Secretary approving a public liability self-insurance application or other public liability security or agreement under the provisions of that part. A carrier must supplement its filings as necessary to ensure that current information is on file. Once a carrier has submitted, or caused to be submitted, a copy of its proof or order of the Secretary, it may thereafter satisfy the filing requirement by certifying that it has done so and that its security, self-insurance, or agreement remains in effect;

(3) A copy of its designation of an agent or agents for service of process submitted to and accepted by the Secretary under 49 CFR part 366. A carrier must supplement its filings as necessary to ensure that current information is on file. Once a carrier has submitted a copy of its designation, it may thereafter satisfy the filing requirement by certifying that its designation is on file; and

(4) A fee for the filing of proof of insurance. In support of such fee, the carrier must submit the following information:

(i) The number of motor vehicles it intends to operate in each participating State during the next registration year;

(ii) The per vehicle fee each pertinent participating State charges, which fee must equal the fee, not to exceed $10, that such State collected or charged as of November 15, 1991;

(iii) The total fee due each participating State; and

(iv) The total of all fees specified in paragraph (c)(4)(iii) of this section.

(d) Consistent with its obligations under paragraph (c)(2) of this section, a carrier must cause to be timely filed with its registration State copies of any notices of cancellation or of any replacement certificates of insurance, surety bonds, or other security filed with the Secretary under 49 CFR part 387, subpart C.

(e) A carrier must make such supplemental filings at any time during the registration year as may be necessary to specify additional vehicles and/or States of operation and to pay additional fees.

(f) A motor carrier must submit to its insurer or insurers a copy of the supporting information, including any supplemental information, filed with its registration State under paragraphs (c)(4) and (e) of this section.

(g) The charging or collection of any fee that is not in accordance with the fee system established above is deemed a burden on interstate commerce. This includes fees for the registration or filing of evidence of insurance whether assessed directly upon the carrier or indirectly upon the insurance provider or other party who seeks reimbursement from the carrier.

(h) To the extent any State registration requirement imposes obligations in excess of those specified in this part, the requirement is an unreasonable burden on transportation within the Secretary's jurisdiction under 49 U.S.C. 13501.

[58 FR 28933, May 18, 1993. Redesignated at 61 FR 54707, Oct. 21, 1996, as amended at 62 FR 15420, Apr. 1, 1997]

§ 367.5 Registration receipts.

(a) On compliance by a motor carrier with the annual or supplemental registration requirements of § 367.4, the registration State must issue the carrier a receipt reflecting that the carrier has filed the required proof of insurance and paid fees in accordance with the requirements of that section.

(1) The receipt must contain only information identifying the carrier and specifying the States for which fees were paid. Supplemental receipts need contain only information relating to their underlying supplemental registrations.

(b) Receipts issued pursuant to a filing made during the annual registration period specified in § 367.4(b)(2) must be issued within 30 days. All other receipts must be issued by the 30th day following the date of filing of a fully acceptable supplemental registration application. All receipts shall expire at midnight on the 31st day of December of the registration year for which they were issued.

(c) A carrier is permitted to operate its motor vehicles only in those participating States with respect to which it has paid appropriate fees.

(d) A motor carrier may make copies of receipts to the extent necessary to comply with the provisions of paragraph (e) of this section. However, it may not alter a receipt or a copy of a receipt.

(e) A motor carrier must maintain in each of its motor vehicles a copy(ies) of its receipt(s), indicating that it has filed the required proof of insurance and paid the required fees.

(f) The driver of a motor vehicle must present a copy(ies) of a receipt(s) for inspection by any authorized government personnel on reasonable demand.

(g) No registration State shall require decals, stamps, cab cards, or any other means of registering or identifying specific vehicles operated by a motor carrier.

[60 FR 39875, Aug. 4, 1995. Redesignated at 61 FR 54707, Oct. 21, 1996, as amended at 62 FR 15420, Apr. 1, 1997]

EFFECTIVE DATE NOTE: At 60 FR 39875, Aug. 4, 1995, the above §367.5, was reinstated, effective from August 4, 1995, until December 31, 1996. Also at 60 FR 39875, Aug. 4, 1995, the following §367.5 which was revised at 60 FR 30012, June 7, 1995, was suspended from August 4, 1995, until January 1, 1997. At 61 FR 54707, Oct. 21, 1996, part 1023 was redesignated as part 367. At 61 FR 64295, Dec. 4, 1996, the effective date of the preceding §367.5 was extended until Dec. 31, 1997, and the suspension of the following §367.5 was continued until Jan. 1, 1998. For the convenience of the reader the text suspended until January 1, 1998 is set forth below.

§367.5 Registration receipts.

(a) On compliance by a motor carrier with the annual or supplemental registration requirements of §367.4, the registration State must issue the carrier a receipt reflecting that the carrier has filed the required proof of insurance and paid fees in accordance with the requirements of that section. The registration State also must issue a number of official copies of the receipt equal to the number of motor vehicles for which fees have been paid.

(1) The receipt and official copies must contain only information identifying the carrier and specifying the States for which fees were paid. Supplemental receipts and official copies need contain only information relating to their underlying supplemental registrations.

(b) Receipts and official copies issued pursuant to a filing made during the annual registration period specified in §367.4(b)(2) must be issued within 30 days of filing of a fully acceptable registration application. All other receipts and official copies must be issued by the 30th day following the date of filing of a fully acceptable supplemental registration application. All receipts and official copies shall expire at midnight on the 31st day of December of the registration year for which they were issued.

(c) A carrier is permitted to operate its motor vehicles only in those participating States with respect to which it has paid appropriate fees, as indicated on the receipts and official copies. It may not operate more motor vehicles in a participating State than the number for which it has paid fees.

(d) A motor carrier may not copy or alter a receipt or an official copy of a receipt.

(e) A motor carrier must maintain in each of its motor vehicles an official copy of its receipt indicating that it has filed the required proof of insurance and paid appropriate fees for each State in which it operates.

(f) A motor carrier may transfer its official copies of its receipts from vehicles taken out of service to their replacement vehicles.

(g) The driver of a motor vehicle must present an official copy of a receipt for inspection by any authorized government personnel on reasonable demand.

(h) No registration State shall require decals, stamps, cab cards, or any other means of registering or identifying specific vehicles operated by a motor carrier.

[60 FR 30012, June 7, 1995. Redesignated at 61 FR 54707, Oct. 21, 1996, as amended at 62 FR 15420, Apr. 1, 1997]

§367.6 Registration State accounting.

(a) A participating State must, on or before the last day of each month, allocate and remit to each other participating State the appropriate portion of the fee revenue registrants submitted during the preceding month. Each remittance must be accompanied by a supporting statement identifying registrants and specifying the number of motor vehicles for which each registrant submitted fees. A participating State must submit a report of ''no activity'' to any other participating State for which it collected no fees during any month.

(b) A participating State must maintain records of fee revenue received from and remitted to each other participating State. Such records must specify the fees received from and remitted to each participating State with respect to each motor carrier registrant. A participating State must retain such records for a minimum of 3 years.

(c) A participating State must keep records pertaining to each of the motor carriers for which it acts as a registration State. The records must, at a minimum, include copies of annual and supplemental registration applications containing the information required by § 367.4(c). A registration State must retain all such records for a minimum of 3 years.

[58 FR 28933, May 18, 1993. Redesignated at 61 FR 54707, Oct. 21, 1996, as amended at 62 FR 15420, Apr. 1, 1997]

§ 367.7 Violations unlawful; criminal penalties and civil sanctions.

Any violation of the provisions of these standards is unlawful. Nothing in these standards shall be construed to prevent a State from imposing criminal penalties or civil sanctions upon any person or organization violating any provision of them.

APPENDIX A TO PART 367—UNIFORM APPLICATION FOR SINGLE STATE REGISTRATION FOR MOTOR CARRIERS REGISTERED WITH THE SECRETARY OF TRANSPORTATION

Motor Carrier Identification Numbers:

FHWA MC No.(s.) _____

US DOT No. _____

Applicant (Identical to name on FHWA order):

Name: _____

D/B/A _____

Principal Place of Business Address:[1]

Street _____

City _____

State _____

Zip _____

Mailing Address if Different From Business Address Above:

Street _____

City _____

State _____

Zip _____

Type of Registration:

[ ] *New Carrier Registration*— The motor carrier has not previously registered.

[ ] *Annual Registration*— The motor carrier is renewing its annual registration.

[ ] *Supplemental Registration*— The motor carrier is adding additional vehicles or States of travel after its annual registration.

[ ] *New Registration State Selection*— The motor carrier has changed its principal place of business or its prior registration State has left the registration program. The prior registration State was _____.

[ ] *Additional States not registered* in prior years. List

_____

_____

Type of Motor Carrier: (Check one)

[ ] Individual [ ] Partnership [ ] Corporation

If corporation, give State in which incorporated:_____

List names of partners or officers:

Name: _____

Title: _____

Name: _____

Title: _____

Name: _____

Title: _____

Type of FHWA Registered Authority:

Permanent Certificate or Permit [ ] Temporary Authority (TA) [ ] Emergency Temporary Authority (ETA) [ ]

FHWA Certificate(s) or Permit(s):

[ ] FHWA Authority Order(s) attached for initial registration.

[ ] FHWA Authority Order(s) attached for additional grants received.

[ ] No change from prior year registration.

Proof of Public Liability Security:

[ ] The applicant is filing, or causing to be filed, a copy of its proof of public liability security submitted to and accepted by the FHWA under 49 CFR part 387, subpart C.

[ ] The applicant has filed, or caused to be filed, a copy of its proof of public liability security submitted to and accepted by the FHWA under 49 CFR part 387, subpart C, and the security remains in effect.

FHWA Approved Self-Insurance or Other Securities:

[ ] FHWA Insurance order attached for new carrier registration. (Check one when completing for annual registration.)

[ ] The FHWA Order approving the self-insurance plan or other security is still in full force and effect, and the carrier is in full compliance with all conditions imposed by the FHWA Order.

[ ] The motor carrier is no longer approved under a self-insurance plan or other security, and the motor carrier will file, or cause to be filed, a copy of proof of public liability security with this application in the registration State.

Hazardous Materials: (Check one)

[1] A principal place of business is a single location that serves as a motor carrier's headquarters and where it maintains or can make available its operational records.

[ ] The applicant *will not* haul hazardous materials in any quantity.
[ ] The applicant will haul hazardous materials that require the following limits in accordance with Title 49 CFR 387.303:

(Check one)
[ ] Public Liability and Property Damage Insurance of $1 million.
[ ] Public Liability and Property Damage Insurance of $5 million.

Process Agents:
[ ] FHWA Form No. BOC–3 or blanket designation attached for new registration.
[ ] FHWA Form No. BOC–3 or blanket designation attached reflecting changes of designation of process agents.
[ ] No change from prior year registration.

Certification:

I, the undersigned, under penalty for false statement, certify that the above information is true and correct and that I am authorized to execute and file this document on behalf of the applicant. (Penalty provisions subject to the laws of the registration State.)

Name (Printed) _____
Signature _____
Title _____
Telephone Number _____
Date _____

[58 FR 28933, May 18, 1993. Redesignated at 61 FR 54707, Oct. 21, 1996, as amended at 62 FR 15420, Apr. 1, 1997]

PART 368—APPLICATIONS FOR CERTIFICATES OF REGISTRATION BY FOREIGN MOTOR CARRIERS AND FOREIGN MOTOR PRIVATE CARRIERS UNDER 49 U.S.C. 13902(c)

Sec.
368.1 Controlling legislation.
368.2 Definitions.
368.3 Procedures used generally.
368.4 Information on Form OP–2.
368.5 Where to send the application.
368.6 Review of the application.
368.7 Appeals.

AUTHORITY: 49 U.S.C. 13301 and 13902; 49 CFR 1.48.

SOURCE: 50 FR 20773, May 20, 1985, unless otherwise noted. Redesignated at 61 FR 54707, Oct. 21, 1996.

§368.1 Controlling legislation.

(a) This part governs applications filed under 49 U.S.C. 13902(c). Under this section certain foreign motor carriers and motor private carriers must hold a certificate of registration to provide certain interstate transportation services otherwise outside the registration jurisdiction of the Secretary. Neither a foreign motor carrier nor a foreign motor private carrier may provide interstate transportation of property unless the Secretary has issued the carrier a certificate of registration. The service allowable under a certificate of registration is described in 49 U.S.C. 13902(c)(4).

(b) This part applies only to carriers of a contiguous foreign country with respect to which a moratorium is in effect under 49 U.S.C. 13902(c)(4).

[62 FR 15420, Apr. 1, 1997]

§368.2 Definitions.

(a) *The Act.* The ICC Termination Act of 1995.

(b) *Foreign motor carrier.* A person transporting the goods of others for hire (including a motor carrier of property):

(1) Which does not hold a registration issued under 49 U.S.C. 13902(a);

(2) Which is domiciled in any contiguous foreign country, or is owned or controlled by persons of any contiguous foreign country; and

(3) In the case of a person which is not a motor carrier of property, which provides interstate transportation of property under an agreement or contract with a motor carrier of property (except a motor carrier described in (b)(2) of this section).

(c) *Foreign motor private carrier.* A person transporting its own goods (including a motor private carrier):

(1) Which is domiciled in any contiguous foreign country;

(2) Which is owned or controlled by persons of any contiguous foreign country; and

(3) In the case of a person which is not a motor private carrier which provided interstate transportation of property by motor vehicle under an agreement or contract entered into with a person (other than a motor private carrier described in (c) (1) and (2) of this section).

(d) *Exempt items.* Commodities described in detail at or transported under 49 U.S.C. 13506(a) (4), (5), (6), (11), (12), (13), and (15).

(e) *Interstate transportation.* Transportation described at 49 U.S.C. 13501, and transportation in the United States otherwise exempt from the Secretary's jurisdiction under 49 U.S.C. 13506(b)(1).

(f) *Fit, willing and able.* Safety fitness and proof of minimum financial responsibility as defined in 49 U.S.C. 13902(a).

(g) *Motor vehicle taxes.* Taxes imposed under 26 U.S.C. 4481.

(h) *Most recent taxable period.* Same as defined in 26 U.S.C. 4482(c).

[50 FR 20773, May 20, 1985, as amended at 54 FR 42959, Oct. 19, 1989; 62 FR 15421, Apr. 1, 1997]

§ 368.3 Procedures used generally.

(a) All applicants must file a completed Form OP–2. All required information must be submitted in English on the Form OP–2. The application will be decided based on the submitted Form OP–2 and any attachments. Notice of the authority sought will not be published in either the FEDERAL REGISTER or the Federal Highway Administration's Office of Motor Carriers Register. Protests or comments will not be allowed. There will be no oral hearings.

(b) Under the statute, the carriers covered must have a copy of a valid certificate of registration in any vehicle providing transportation within the scope of the statute.

(c) Form OP–2 may be obtained at any of the FHWA Regional Offices or by contacting the FHWA's Office of Motor Carriers Section of Licensing.

[50 FR 20773, May 20, 1985, as amended at 54 FR 42959, Oct. 19, 1989; 62 FR 15421, Apr. 1, 1997]

§ 368.4 Information on Form OP–2.

(a) Applicants must furnish all information required on Form OP–2 by completing all spaces on the form and providing any necessary attachments. Failure to do so will result in rejection of the application.

(b) Notarization of the application is not required; however, applicants are subject to applicable Federal penalties for filing false information.

[50 FR 20773, May 20, 1985]

§ 368.5 Where to send the application.

The original and one copy of the application shall be filed with the FHWA's Regional Office that has jurisdiction over applicant's point of domicile (the instructions to the application provide more specific information), or at such other location as the Secretary may designate in special circumstances. A check or money order for the amount of the filing fee set forth at 49 CFR 1002.2(f)(1), payable to the Federal Highway Administration's Office of Motor Carriers in United States dollars, must be submitted.

[62 FR 15421, Apr. 1, 1997]

§ 368.6 Review of the application.

(a) Federal Highway Administration staff will review the application for correctness, completeness, and adequacy of the evidence.

(1) Minor errors will be corrected without notification to the applicant.

(2) Materially incomplete applications will be rejected.

(b) Compliance will be determined solely on the basis of the application and the safety fitness of the applicant. An employee review board will decide whether the authority sought falls under the Act, and whether and to what extent the evidence warrants a grant of the authority.

(1) If the authority sought does not require a certificate of registration, or if the evidence does not warrant a grant of the authority sought, the employee review board will deny the application in whole or in part. In the case of a full or partial denial of an application, the Federal Highway Administration will inform the applicant by letter setting forth the reasons for the denial.

(2) If the employee board grants all or part of the application, the Federal Highway Administration will issue a certificate of registration authorizing specified operations provided that applicant has demonstrated compliance with 49 CFR 366 (designation of process agent). If applicant has not complied with this requirement, the Federal Highway Administration will issue a

notice stating that a certificate of registration will be issued upon such compliance. No certificate of registration shall be issued prior to compliance.

[50 FR 20773, May 20, 1985, as amended at 50 FR 40030, Oct. 1, 1985; 54 FR 52035, Dec. 20, 1989; 55 FR 47338, Nov. 13, 1990; 62 FR 15421, Apr. 1, 1997]

§368.7 Appeals.

A decision disposing of an application subject to this part is a final action of the Federal Highway Administration. Review of such an action on appeal is governed by the FHWA's appeal regulations in 49 CFR part 386.

[62 FR 15421, Apr. 1, 1997]

PART 370—PRINCIPLES AND PRACTICES FOR THE INVESTIGATION AND VOLUNTARY DISPOSITION OF LOSS AND DAMAGE CLAIMS AND PROCESSING SALVAGE

Sec.
370.1 Applicability of regulations.
370.3 Filing of claims.
370.5 Acknowledgment of claims.
370.7 Investigation of claims.
370.9 Disposition of claims.
370.11 Processing of salvage.

AUTHORITY: 49 U.S.C. 13301 and 14706; 49 CFR 1.48.

SOURCE: 62 FR 32042, June 12, 1997, unless otherwise noted.

§370.1 Applicability of regulations.

The regulations set forth in this part shall govern the processing of claims for loss, damage, injury, or delay to property transported or accepted for transportation, in interstate or foreign commerce, by each motor carrier, water carrier, and freight forwarder (hereinafter called carrier), subject to 49 U.S.C. subtitle IV, part B.

§370.3 Filing of claims.

(a) *Compliance with regulations.* A claim for loss or damage to baggage or for loss, damage, injury, or delay to cargo, shall not be voluntarily paid by a carrier unless filed, as provided in paragraph (b) of this section, with the receiving or delivering carrier, or carrier issuing the bill of lading, receipt, ticket, or baggage check, or carrier on whose line the alleged loss, damage, injury, or delay occurred, within the specified time limits applicable thereto and as otherwise may be required by law, the terms of the bill of lading or other contract of carriage, and all tariff provisions applicable thereto.

(b) *Minimum filing requirements.* A written or electronic communication (when agreed to by the carrier and shipper or receiver involved) from a claimant, filed with a proper carrier within the time limits specified in the bill of lading or contract of carriage or transportation and:

(1) Containing facts sufficient to identify the baggage or shipment (or shipments) of property,

(2) Asserting liability for alleged loss, damage, injury, or delay, and

(3) Making claim for the payment of a specified or determinable amount of money, shall be considered as sufficient compliance with the provisions for filing claims embraced in the bill of lading or other contract of carriage; *Provided, however,* That where claims are electronically handled, procedures are established to ensure reasonable carrier access to supporting documents.

(c) *Documents not constituting claims.* Bad order reports, appraisal reports of damage, notations of shortage or damage, or both, on freight bills, delivery receipts, or other documents, or inspection reports issued by carriers or their inspection agencies, whether the extent of loss or damage is indicated in dollars and cents or otherwise, shall, standing alone, not be considered by carriers as sufficient to comply with the minimum claim filing requirements specified in paragraph (b) of this section.

(d) *Claims filed for uncertain amounts.* Whenever a claim is presented against a proper carrier for an uncertain amount, such as ''$100 more or less,'' the carrier against whom such claim is filed shall determine the condition of the baggage or shipment involved at the time of delivery by it, if it was delivered, and shall ascertain as nearly as possible the extent, if any, of the loss or damage for which it may be responsible. It shall not, however, voluntarily pay a claim under such circumstances unless and until a formal claim in writing for a specified or determinable

amount of money shall have been filed in accordance with the provisions of paragraph (b) of this section.

(e) *Other claims.* If investigation of a claim develops that one or more other carriers has been presented with a similar claim on the same shipment, the carrier investigating such claim shall communicate with each such other carrier and, prior to any agreement entered into between or among them as to the proper disposition of such claim or claims, shall notify all claimants of the receipt of conflicting or overlapping claims and shall require further substantiation, on the part of each claimant of his/her title to the property involved or his/her right with respect to such claim.

§ 370.5 Acknowledgment of claims.

(a) Each carrier shall, upon receipt in writing or by electronic transmission of a proper claim in the manner and form described in the regulations in the past, acknowledge the receipt of such claim in writing or electronically to the claimant within 30 days after the date of its receipt by the carrier unless the carrier shall have paid or declined such claim in writing or electronically within 30 days of the receipt thereof. The carrier shall indicate in its acknowledgment to the claimant what, if any, additional documentary evidence or other pertinent information may be required by it further to process the claim as its preliminary examination of the claim, as filed, may have revealed.

(b) The carrier shall at the time each claim is received create a separate file and assign thereto a successive claim file number and note that number on all documents filed in support of the claim and all records and correspondence with respect to the claim, including the acknowledgment of receipt. At the time such claim is received the carrier shall cause the date of receipt to be recorded on the face of the claim document, and the date of receipt shall also appear in the carrier's acknowledgment of receipt to the claimant. The carrier shall also cause the claim file number to be noted on the shipping order, if in its possession, and the delivery receipt, if any, covering such shipment, unless the carrier has established an orderly and consistent internal procedure for assuring:

(1) That all information contained in shipping orders, delivery receipts, tally sheets, and all other pertinent records made with respect to the transportation of the shipment on which claim is made, is available for examination upon receipt of a claim;

(2) That all such records and documents (or true and complete reproductions thereof) are in fact examined in the course of the investigation of the claim (and an appropriate record is made that such examination has in fact taken place); and

(3) That such procedures prevent the duplicate or otherwise unlawful payment of claims.

§ 370.7 Investigation of claims.

(a) *Prompt investigation required.* Each claim filed against a carrier in the manner prescribed in this part shall be promptly and thoroughly investigated if investigation has not already been made prior to receipt of the claim.

(b) *Supporting documents.* When a necessary part of an investigation, each claim shall be supported by the original bill of lading, evidence of the freight charges, if any, and either the original invoice, a photographic copy of the original invoice, or an exact copy thereof or any extract made therefrom, certified by the claimant to be true and correct with respect to the property and value involved in the claim; or certification of prices or values, with trade or other discounts, allowance, or deductions, of any nature whatsoever and the terms thereof, or depreciation reflected thereon; *Provided, however,* That where property involved in a claim has not been invoiced to the consignee shown on the bill of lading or where an invoice does not show price or value, or where the property involved has been sold, or where the property has been transferred at bookkeeping values only, the carrier shall, before voluntarily paying a claim, require the claimant to establish the destination value in the quantity, shipped, transported, or involved; *Provided, further,* That when supporting documents are determined to be a necessary part of an investigation, the supporting documents are retained by

the carriers for possible FHWA inspection.

(c) *Verification of loss.* When an asserted claim for loss of an entire package or an entire shipment cannot be otherwise authenticated upon investigation, the carrier shall obtain from the consignee of the shipment involved a certified statement in writing that the property for which the claim is filed has not been received from any other source.

§ 370.9 Disposition of claims.

(a) Each carrier subject to 49 U.S.C. subtitle IV, part B which receives a written or electronically transmitted claim for loss or damage to baggage or for loss, damage, injury, or delay to property transported shall pay, decline, or make a firm compromise settlement offer in writing or electronically to the claimant within 120 days after receipt of the claim by the carrier; *Provided, however,* That, if the claim cannot be processed and disposed of within 120 days after the receipt thereof, the carrier shall at that time and at the expiration of each succeeding 60-day period while the claim remains pending, advise the claimant in writing or electronically of the status of the claim and the reason for the delay in making final disposition thereof and it shall retain a copy of such advice to the claimant in its claim file thereon.

(b) When settling a claim for loss or damage, a common carrier by motor vehicle of household goods as defined in § 375.1(b)(1) of this chapter shall use the replacement costs of the lost or damaged item as a base to apply a depreciation factor to arrive at the current actual value of the lost or damaged item: *Provided,* That where an item cannot be replaced or no suitable replacement is obtainable, the proper measure of damages shall be the original costs, augmented by a factor derived from a consumer price index, and adjusted downward by a factor depreciation over average useful life.

§ 370.11 Processing of salvage.

(a) Whenever baggage or material, goods, or other property transported by a carrier subject to the provisions in this part is damaged or alleged to be damaged and is, as a consequence thereof, not delivered or is rejected or refused upon tender thereof to the owner, consignee, or person entitled to receive such property, the carrier, after giving due notice, whenever practicable to do so, to the owner and other parties that may have an interest therein, and unless advised to the contrary after giving such notice, shall undertake to sell or dispose of such property directly or by the employment of a competent salvage agent. The carrier shall only dispose of the property in a manner that will fairly and equally protect the best interests of all persons having an interest therein. The carrier shall make an itemized record sufficient to identify the property involved so as to be able to correlate it to the shipment or transportation involved, and claim, if any, filed thereon. The carrier also shall assign to each lot of such property a successive lot number and note that lot number on its record of shipment and claim, if any claim is filed thereon.

(b) Whenever disposition of salvage material or goods shall be made directly to an agent or employee of a carrier or through a salvage agent or company in which the carrier or one or more of its directors, officers, or managers has any interest, financial or otherwise, that carrier's salvage records shall fully reflect the particulars of each such transaction or relationship, or both, as the case may be.

(c) Upon receipt of a claim on a shipment on which salvage has been processed in the manner prescribed in this section, the carrier shall record in its claim file thereon the lot number assigned, the amount of money recovered, if any, from the disposition of such property, and the date of transmittal of such money to the person or persons lawfully entitled to receive the same.

PART 371—BROKERS OF PROPERTY

Sec.

371.1 Applicability.
371.2 Definitions.
371.3 Records to be kept by brokers.
371.7 Misrepresentation.
371.9 Rebating and compensation.
371.10 Duties and obligations of brokers.
371.13 Accounting.

AUTHORITY: 49 U.S.C. 13301 and 13501; 49 CFR 1.48.

SOURCE: 45 FR 68942, Oct. 17, 1980, unless otherwise noted. Redesignated at 61 FR 54707, Oct. 21, 1996.

§ 371.1 Applicability.

This part applies, to the extent provided therein, to all brokers of transportation by motor vehicle as defined in § 371.2.

[32 FR 20034, Dec. 20, 1967, as amended at 62 FR 15421, Apr. 1, 1997]

§ 371.2 Definitions.

(a) *Broker* means a person who, for compensation, arranges, or offers to arrange, the transportation of property by an authorized motor carrier. Motor carriers, or persons who are employees or bona fide agents of carriers, are not brokers within the meaning of this section when they arrange or offer to arrange the transportation of shipments which they are authorized to transport and which they have accepted and legally bound themselves to transport.

(b) *Bona fide agents* are persons who are part of the normal organization of a motor carrier and perform duties under the carrier's directions pursuant to a preexisting agreement which provides for a continuing relationship, precluding the exercise of discretion on the part of the agent in allocating traffic between the carrier and others.

(c) *Brokerage* or *brokerage service* is the arranging of transportation or the physical movement of a motor vehicle or of property. It can be performed on behalf of a motor carrier, consignor, or consignee.

(d) *Non-brokerage service* is all other service performed by a broker on behalf of a motor carrier, consignor, or consignee.

§ 371.3 Records to be kept by brokers.

(a) A broker shall keep a record of each transaction. For purposes of this section, brokers may keep master lists of consignors and the address and registration number of the carrier, rather than repeating this information for each transaction. The record shall show:

(1) The name and address of the consignor;

(2) The name, address, and registration number of the originating motor carrier;

(3) The bill of lading or freight bill number;

(4) The amount of compensation received by the broker for the brokerage service performed and the name of the payer;

(5) A description of any non-brokerage service performed in connection with each shipment or other activity, the amount of compensation received for the service, and the name of the payer; and

(6) The amount of any freight charges collected by the broker and the date of payment to the carrier.

(b) Brokers shall keep the records required by this section for a period of three years.

(c) Each party to a brokered transaction has the right to review the record of the transaction required to be kept by these rules.

[45 FR 68942, Oct. 17, 1980. Redesignated at 61 FR 54707, Oct. 21, 1996, as amended at 62 FR 15421, Apr. 1, 1997]

§ 371.7 Misrepresentation.

(a) A broker shall not perform or offer to perform any brokerage service (including advertising), in any name other than that in which its registration is issued.

(b) A broker shall not, directly or indirectly, represent its operations to be that of a carrier. Any advertising shall show the broker status of the operation.

[45 FR 68942, Oct. 17, 1980. Redesignated at 61 FR 54707, Oct. 21, 1996, as amended at 62 FR 15421, Apr. 1, 1997]

§ 371.9 Rebating and compensation.

(a) A broker shall not charge or receive compensation from a motor carrier for brokerage service where:

(1) The broker owns or has a material beneficial interest in the shipment or

(2) The broker is able to exercise control over the shipment because the broker owns the shipper, the shipper owns the broker, or there is common ownership of the two.

(b) A broker shall not give or offer to give anything of value to any shipper, consignor or consignee (or their officers or employees) except inexpensive

advertising items given for promotional purposes.

§ 371.10 Duties and obligations of brokers.

Where the broker acts on behalf of a person bound by law or the FHWA regulation as to the transmittal of bills or payments, the broker must also abide by the law or regulations which apply to that person.

[45 FR 68943, Oct. 17, 1980, as amended at 62 FR 15421, Apr. 1, 1997]

§ 371.13 Accounting.

Each broker who engages in any other business shall maintain accounts so that the revenues and expenses relating to the brokerage portion of its business are segregated from its other activities. Expenses that are common shall be allocated on an equitable basis; however, the broker must be prepared to explain the basis for the allocation.

[45 FR 68943, Oct. 17, 1980]

PART 372—EXEMPTIONS, COMMERCIAL ZONES, AND TERMINAL AREAS

Subpart A—Exemptions

Sec.
372.101 Casual, occasional, or reciprocal transportation of passengers for compensation when such transportation is sold or arranged by anyone for compensation.
372.103 Motor vehicles employed solely in transporting school children and teachers to or from school.
372.107 Definitions.
372.109 Computation of tonnage allowable in nonfarm-non-member transportation.
372.111 Nonmember transportation limitation and recordkeeping.
372.113 [Reserved]
372.115 Commodities that are not exempt under 49 U.S.C. 13506(a)(6).
372.117 Motor transportation of passengers incidental to transportation by aircraft.

Subpart B—Commercial Zones

372.201 Albany, NY.
372.203 Beaumont, TX.
372.205 Charleston, SC.
372.207 Charleston, WV.
372.209 Lake Charles, LA.
372.211 Pittsburgh, PA.
372.213 Pueblo, CO.
372.215 Ravenswood, WV.
372.217 Seattle, WA.
372.219 Washington, DC.
372.221 Twin Cities.
372.223 Consolidated governments.
372.225 Lexington-Fayette Urban County, KY.
372.227 Syracuse, NY.
372.229 Spokane, WA.
372.231 Tacoma, WA.
372.233 Chicago, IL.
372.235 New York, NY.
372.237 Cameron, Hidalgo, Starr, and Willacy Counties, TX.
372.239 Definitions.
372.241 Commercial zones determined generally, with exceptions.
372.243 Controlling distances and population data.

Subpart C—Terminal Areas

372.300 Distances and population data.
372.301 Terminal areas of motor carriers and freight forwarders at municipalities served.
372.303 Terminal areas of motor carriers and household goods freight forwarders at unincorporated communities served.

AUTHORITY: 49 U.S.C. 13504 and 13506; 49 CFR 1.48.

SUBPART A—Exemptions

AUTHORITY: 49 U.S.C. 10525, 10526, 10931.

SOURCE: 32 FR 20036, Dec. 20, 1967, unless otherwise noted. Redesignated at 61 FR 54708, Oct. 21, 1996.

§ 372.101 Casual, occasional, or reciprocal transportation of passengers for compensation when such transportation is sold or arranged by anyone for compensation.

The partial exemption from regulation under the provisions of 49 U.S.C. subtitle IV, part B of the casual, occasional, and reciprocal transportation of passengers by motor vehicle in interstate or foreign commerce for compensation as provided in 49 U.S.C. 13506(b) be, and it is hereby, removed to the extent necessary to make applicable all provisions of 49 U.S.C. subtitle IV, part B to such transportation when sold or offered for sale, or provided or procured or furnished or arranged for, by any person who sells, offers for sale,

provides, furnishes, contracts, or arranges for such transportation for compensation or as a regular occupation or business.

[32 FR 20036, Dec. 20, 1967. Redesignated at 61 FR 54708, Oct. 21, 1996, as amended at 62 FR 15421, Apr. 1, 1997]

§ 372.103 Motor vehicles employed solely in transporting school children and teachers to or from school.

The exemption set forth in 49 U.S.C. 13506(a)(1) shall not be construed as being inapplicable to motor vehicles being used at the time of operation in the transportation of schoolchildren and teachers to or from school, even though such motor vehicles are employed at other times in transportation beyond the scope of the exemption.

[36 FR 9022, May 18, 1971, as amended at 62 FR 15421, Apr. 1, 1997]

§ 372.107 Definitions.

As used in the regulations in this part, the following terms shall have the meaning shown:

(a) *Cooperative association*. The term ''cooperative association'' means an association which conforms to the following definition in the Agricultural Marketing Act, approved June 15, 1929, as amended (12 U.S.C. 1141j):

As used in this Act, the term *cooperative association* means any association in which farmers act together in processing, preparing for market, handling, and/or marketing the farm products of persons so engaged, and also means any association in which farmers act together in purchasing, testing, grading, processing, distributing, and/or furnishing farm supplies and/or farm business services. Provided, however, That such associations are operated for the mutual benefit of the members thereof as such producers or purchasers and conform to one or both of the following requirements:

First. That no member of the association is allowed more than one vote because of the amount of stock or membership capital he may own therein; and

Second. That the association does not pay dividends on stock or membership capital in excess of 8 per centum per annum.

And in any case to the following:

Third. That the association shall not deal in farm products, farm supplies and farm business services with or for nonmembers in an amount greater in value than the total amount of such business transacted by it with or for members. All business transacted by any cooperative association for or on behalf of the United States or any agency or instrumentality thereof shall be disregarded in determining the volume of member and nonmember business transacted by such association.

Associations which do not conform to such definition are not eligible to operate under the partial exemption of 49 U.S.C. 10526(a)(5).

(b) *Federation of cooperative associations*. The term ''federation of cooperative associations'' means a federation composed of either two or more cooperative associations, or one or more farmers, which federation possesses no greater powers or purposes than a cooperative association as defined in paragraph (a) of this section. Federations of cooperative associations which do not conform to such definition are not eligible to operate under the partial exemption of 49 U.S.C. 10526(a)(5).

(c) *Member*. The term ''member'' means any farmer or cooperative association which has consented to be, has been accepted as, and is a member in good standing in accordance with the constitution, bylaws, or rules of the cooperative association or federation of cooperative associations.

(d) *Farmer*. The term ''farmer'' means any individual, partnership, corporation, or other business entity to the extent engaged in farming operations either as a producer of agricultural commodities or as a farm owner.

(e) *Interstate transportation*. The term ''interstate transportation'' means transportation by motor vehicle in interstate or foreign commerce subject to the Commission's jurisdiction as set forth in 49 U.S.C. 10521.

(f) *Member transportation*. The term ''member transportation'' means transportation performed by a cooperative association or federation of cooperative associations for itself or for its members, but does not include transportation performed in furtherance of the nonfarm business of such members.

(g) *Nonmember transportation*. The term ''nonmember transportation'' means transportation performed by a cooperative association or federation of cooperative associations other than member transportation as defined in paragraph (f) of this section.

(h) *Fiscal year.* The term ''fiscal year'' means the annual accounting period adopted by the cooperative association or federation of cooperative associations for Federal income tax reporting purposes.

[43 FR 2397, Jan. 17, 1978, as amended at 45 FR 45524, July 3, 1980; 47 FR 13353, Mar. 30, 1982; 47 FR 15142, Apr. 8, 1982]

§ 372.109 Computation of tonnage allowable in nonfarm-non-member transportation.

Interstate transportation performed by a cooperative association or federation of cooperative associations for nonmembers who are not farmers, cooperative associations, or federations of associations or the United States Government for compensation, (except transportation otherwise exempt under subchapter II, chapter 105, subtitle IV of title 49 of the United States Code) shall be limited to that which is incidental to its primary transportation operation and necessary for its effective performance. It shall in no event exceed 25 percent of its total interstate transportation services in any fiscal year, measured in terms of tonnage. A cooperative association or federation of cooperative associations may transport its own property, its members' property, property of other farmers and the property of other cooperatives or federations in accordance with existing law, except where the provisions of § 372.111 may be applicable to the limit on member/nonmember transportation.

(a) The phrase ''incidental to its primary transportation operation and necessary for its effective performance'' means that the interstate transportation of the cooperative association or federation of cooperation association for nonmembers as described above is performed with the same trucks or tractors employed in a prior or subsequent trip in the primary transportation operation of the cooperative association or federation, that it is not economically feasible to operate the trucks or tractors empty on return trips (outbound trips in cases where the primary transportation operation is inbound to the association or federation), and that the additional income obtained from such transportation is necessary to make the primary transportation operation financially practicable. Transportation for nonmembers as described above performed by a cooperative or federation through the use of trucks or tractors trip-leased for one-way movements with the cooperative association or federation acting as leasee, is not incidental and necessary;

(b) The base tonnage to which the 25-percent limitation is applied is all tonnage of all kinds transported by the cooperative association or federation of cooperative associations in interstate or foreign commerce, whether for itself, its members or nonmembers, for or on behalf of the United States or any agency or instrumentality thereof, and that performed within the exemption provided by 49 U.S.C. 10526(a)(5).

[43 FR 2397, Jan. 17, 1978, as amended at 43 FR 21894, May 22, 1978; 45 FR 45524, July 3, 1980; 62 FR 49940, Sept. 24, 1997]

§ 372.111 Nonmember transportation limitation and record keeping.

(a) *Overall limitation of nonmember transportation.* No cooperative association or federation of cooperative associations may engage in nonmember interstate transportation for compensation in any fiscal year which, measured in terms of tonnage, exceeds its total interstate member transportation in such fiscal year.

(b) *Records of interstate transportation when nonmember transportation is performed.* Any cooperative association or federation of cooperative associations performing interstate transportation for nonmembers shall prepare and retain for a period of at least two years written records of all interstate transportation performed for members and nonmembers. These records shall contain:

(1) The date of the shipment,

(2) The names and addresses of the consignor and consignee,

(3) The origin and destination of the shipment,

(4) A description of the articles in the shipment,

(5) The weight or volume of the shipment,

(6) A description of the equipment used either by unit number or license number and, in the event this equipment is nonowned, the name and address of its owners and drivers,

(7) The total charges collected,

(8) A copy of all leases executed by the cooperative association or federation of cooperative associations to obtain equipment to perform transportation under 49 U.S.C. 13506(a)(5),

(9) Whether the transportation performed is:

(i) Member transportation,

(ii) Nonmember transportation for nonmembers who are farmers, cooperative associations, or federations thereof,

(iii) Other nonmember transportation, and if of class (iii), how the transportation was incidental and necessary as defined in § 372.109(a).

[43 FR 2397, Jan. 17, 1978, as amended at 45 FR 45524, July 3, 1980; 62 FR 38036, July 16, 1997; 62 FR 49940, Sept. 24, 1997]

§ 372.113 [Reserved]

§ 372.115 Commodities that are not exempt under 49 U.S.C. 13506(a)(6).

49 U.S.C. 13506(a)(6) provides an exemption from regulation for motor vehicles used in carrying ordinary livestock, fish, and unmanufactured agricultural commodities. Certain specific commodities have been statutorily determined to be non-exempt. Administrative Ruling No. 133, which is reproduced below, is a list of those commodities that are non-exempt by statute.

ADMINISTRATIVE RULING NO. 133

LIST OF COMMODITIES THAT ARE NOT EXEMPT BY STATUTE UNDER 49 U.S.C. 13506(a)(6)

Animal fats
Butter
Canned fruits and vegetables
Carnauba wax as imported in slabs or chunks
Cattle, slaughtered
Charcoal
Cheese
Coal
Cocoa beans
Coffee, beans, roasted, or instant
Copra meal
Cotton yarn
Cottonseed cake or meal
Diatomaceous earth
Dinners, frozen
Feeds:
- Alfalfa meal
- Alfalfa pellets
- Beet pulp
- Bran shorts
- Copra meal
- Corn gluten
- Distilled corn grain residues, with or without solubles added
- Fish meal
- Hominy feed
- Middlings
- Pelletized ground refuse screenings
- Wheat bran
- Wheat shorts

Fertilizer, commercial
Fish:
- Canned or salted as a treatment for preserving
- Cooked or partially cooked fish or shrimp, frozen or unfrozen
- Hermetically sealed in containers as a treatment for preserving
- Oil from fishes
- Preserved, or treated for preserving, such as smoked, salted, pickled, spiced, corned or kippered

Flagstone
Flaxseed meal
Flour
Forest products:
- Resin products, such as turpentine

Fruits and Berries:
- Bananas, fresh, dried, dehydrated, or frozen
- Canned
- Frozen
- Hulls of oranges after juice extractions
- Juice, fruit, plain or concentrated
- Pies, frozen
- Preserved, such as jam
- Purees, strawberry and other, frozen

Grains:
- Oils extracted from grain
- Popcorn, popped
- Rice, precooked
- Wheat germ

Gravel
Hair, hog or other animal, product of slaughter of animal
Hay, sweetened with 3 percent molasses by weight
Hemp fiber
Hides, green and salted
Insecticides
Limestone, agricultural
Livestock:
- Monkeys
- Race horses
- Show horses
- Zoo animals

Lumber, rough sawed or planed
Maple syrup
Meal:
- Alfalfa
- Copra
- Cottonseed
- Fish

Flaxseed
Linseed
Peanut
Soybean

Meat and meat products, fresh, frozen or canned

Milk and Cream:

Chocolate
Condensed
Sterilized in hermetically sealed cans

Molasses

Nuts (including peanuts):

Peanut meal
Roasted or boiled

Oil, mint
Oil, extracted from vegetables, grain, seed, fish or other commodity
Pelts
Pies, frozen
Pigeons, racing
Pulp, beet
Pulp, sugar cane
Rock (except natural crushed, vesicular rock to be used for decorative purposes)
Rubber, crude, in bales
Rubber, latex, natural, liquid, from which water has been extracted and to which ammonia has been added
Sand

Seeds:

Oil extracted from seeds

Skins, animal
Soil, potting
Soil, top
Soup, frozen
Sugar
Sugar cane pulp
Sugar raw
Syrup, cane
Syrup, maple
Tea

Tobacco:

Cigars and cigarettes
Homogenized
Smoking

Top Soil

Trees:

Sawed into lumber

Vegetables:

Candied sweet potatoes, frozen
Canned
Cooked
French fried potatoes
Oil, extracted from vegetables
Soup, frozen
Soybean meal

Wool imported from a foreign country
Wool tops and noils
Wool waste (carded, spun, woven, or knitted)
Wool yarn

Note 1: Under 49 U.S.C. 13506(a)(6)(D), any listed fish or shellfish product that is not intended for human consumption is *exempt*.

Note 2: Under 49 U.S.C. 13506(a)(6)(E), any listed livestock feed, poultry feed, agricultural seeds, or plants that are transported to a site of agricultural production or to a business enterprise engaged in the sale to agricultural producers of goods used in agricultural production is *exempt*

[53 FR 17707, May 18, 1988, as amended at 62 FR 15421, Apr. 1, 1997]

§ 372.117 Motor transportation of passengers incidental to transportation by aircraft.

(a) *Passengers having an immediately prior or subsequent movement by air.* The transportation of passengers by motor vehicle is transportation incidental to transportation by aircraft provided (1) that it is confined to the transportation of passengers who have had or will have an immediately prior or immediately subsequent movement by air and (2) that the zone within which motor transportation is incidental to transportation by aircraft, except as it may be individually determined as provided in section (c) herein, shall not exceed in size the area encompassed by a 25-mile radius of the boundary of the airport at which the passengers arrive or depart and by the boundaries of the commercial zones (as defined by the Secretary) of any municipalities any part of whose commercial zones falls within the 25-mile radius of the pertinent airport.

(b) *Substituted motor-for-air transportation due to emergency conditions.* Transportation of passengers by motor vehicle is transportation incidental to transportation by aircraft if it constitutes substituted motor-for-air service performed at the expense of the air carrier in emergency situations arising from the inability of the air carrier to perform air transportation due to adverse weather conditions, equipment failure, or other causes beyond the control of the air carrier.

(c) *Individual determination of exempt zones.* Upon its own motion or upon petition filed by any interested person, the Secretary may in an appropriate proceeding, determine whether the area within which the transportation by motor vehicle of passengers having an immediately prior or subsequent

movement by air must be performed, in order to come within the provisions of paragraph (a) of this section, should be individually determined with respect to any particular airport or city served by an airport, and whether there should be established therefor appropriate boundaries differing in extent from this defined in paragraph (a)(2) of this section.

(d) *Exempt zones and operations*—(1) *Dulles and Baltimore-Washington International Airports.* The transportation by motor vehicle, in interstate or foreign commerce, of passengers, having an immediately prior or subsequent movement by air, between Dulles International Airport, near Chantilly, Va., and Baltimore-Washington International Airport, near Baltimore, Md., is partially exempt from regulation under 49 U.S.C. 13506(a)(8)(A).

(2) *Savannah, Ga., Airport.* The transportation by motor vehicle, in interstate or foreign commerce, of passengers, having an immediately prior or subsequent movement by air, between Savannah, Ga., Airport and all points on Hilton Head Island, SC, is partially exempt from regulation under 49 U.S.C. 13506(a)(8)(A).

(3) *Chicago O'Hare International Airport (Chicago, Ill.).* The transportation by motor vehicle, in interstate or foreign commerce, of passengers, having an immediately prior or subsequent movement by air, between O'Hare International Airport, at Chicago, Ill., on the one hand, and, on the other, points in Indiana on and north of U.S. Highway 30 and on and west of Indiana Highway 49, is partially exempt from regulation under 49 U.S.C. 13506(a)(8)(A).

[32 FR 20036, Dec. 20, 1967, as amended at 37 FR 5252, Mar. 11, 1972; 42 FR 10003, Feb. 18, 1977; 42 FR 15705; Mar. 23, 1977; 62 FR 15421, Apr. 1, 1997]

SUBPART B—Commercial Zones

AUTHORITY: 49 U.S.C. 10321 and 10526 and 5 U.S.C. 553.

SOURCE: 41 FR 56653, Dec. 29, 1976, unless otherwise noted. Redesignated at 61 FR 54708, Oct. 21, 1996.

§ 372.201 Albany, N.Y.

The zone adjacent to, and commercially a part of Albany, N.Y., within which transportation by motor vehicle, in interstate or foreign commerce, not under common control, management, or arrangement for a continuous carriage or shipment to or from a point beyond such zone, is partially exempt from regulations under 49 U.S.C. 13506(b)(1) includes and is comprised of all points as follows:

(a) The municipality of Albany, N.Y., itself.

(b) All points within a line drawn eight miles beyond the municipal limits of Albany.

(c) All points in that area more than eight miles beyond the municipal limits of Albany bounded by a line as follows: Beginning at that point on the western boundary of Cohoes, N.Y., where it crosses the line described in paragraph (b) of this section, thence along the western and northern boundary of Cohoes to the Mohawk River thence along such river to the northern boundary of the Town of Waterford thence along the northern and eastern boundaries of the Town of Waterford to the northern boundary of the City of Troy (all of which city is included under the next provision).

(d) All of any municipality any part of which is within the limits of the combined areas defined in paragraphs (b) and (c) of this section, and

(e) All of any municipality wholly surrounded, or so surrounded except for a water boundary, by the municipality of Albany or any other municipality included under the terms of paragraph (d) of this section.

[41 FR 56653, Dec. 29, 1976, as amended at 62 FR 15422, Apr. 1, 1997]

§ 372.203 Beaumont, Tex.

The zone adjacent to, and commercially a part of Beaumont, Tex., within which transportation by motor vehicle in interstate or foreign commerce, not under common control, management, or arrangement for a continuous carriage or shipment to or from a point beyond such zone, is partially exempt from regulation under 49 U.S.C. 13506(b)(1) includes and is comprised of all points as follows:

(a) The municipality of Beaumont, Tex., itself;

(b) All points within a line drawn 8 miles beyond the municipal limits of Beaumont;

(c) All points in Jefferson County and Orange County, Tex.;

(d) All of any municipality any part of which is within the limits of the combined areas defined in paragraphs (b) and (c) of this section, and

(e) All of any municipality wholly surrounded, or so surrounded except for a water boundary, by the municipality of Beaumont or by any other municipality included under the terms of paragraph (d) of this section.

[41 FR 56653, Dec. 29, 1976, as amended at 62 FR 15422, Apr. 1, 1997]

§ 372.205 Charleston, S.C.

The zone adjacent to, and commercially a part of Charleston, S.C., within which transportation by motor vehicle in interstate or foreign commerce, not under common control, management, or arrangement for a continuous carriage or shipment to or from a point beyond such zone, is partially exempt from regulation under 49 U.S.C. 13506(b)(1) includes and is comprised of all points as follows:

(a) The municipality of Charleston, S.C., itself;

(b) All points within a line drawn 6 miles beyond the municipal limits of Charleston;

(c) Those points in Charleston County, S.C., which are not within the areas described in paragraph (b) of this section; and those points in Berkley County, S.C., which are not within the areas described in paragraph (b) of this section, and which are west of South Carolina Highway 41; and all points in Dorchester County, SC.

(d) All of any municipality any part of which is within the limits of the combined areas defined in paragraphs (b) and (c) of this section, and

(e) All of any municipality wholly surrounded, or so surrounded except for a water boundary, by the municipality of Charleston or by any other municipality included under the terms of paragraph (d) of this section.

[41 FR 56653, Dec. 29, 1976, as amended at 46 FR 28658, May 28, 1981; 62 FR 15422, Apr. 1, 1997]

§ 372.207 Charleston, W. Va.

The zone adjacent to, and commercially a part of Charleston, W. Va., within which transportation by motor vehicle in interstate or foreign commerce, not under common control, management, or arrangement for a continuous carriage or shipment to or from a point beyond such zone, is partially exempt from regulation under 49 U.S.C. 13506(b)(1) includes and is comprised of all points as follows:

(a) The municipality of Charleston, W. Va., itself;

(b) All points within a line drawn 6 miles beyond the municipal limits of Charleston;

(c) Those points in Kanawha County, W. Va., which are not within the area described in paragraph (b) of this section; and those points in Putnam County, W. Va., south of West Virginia Highway 34;

(d) All of any municipality any part of which is within the limits of the combined areas defined in paragraphs (b) and (c) of this section, and

(e) All of any municipality wholly surrounded, or so surrounded except for a water boundary, by the municipality of Charleston or by any other municipality included under the terms of paragraph (d) of this section.

[41 FR 56653, Dec. 29, 1976, as amended at 62 FR 15422, Apr. 1, 1997]

§ 372.209 Lake Charles, La.

The zone adjacent to, and commercially a part of Lake Charles, La., within which transportation by motor vehicle in interstate or foreign commerce, not under common control, management, or arrangement for a continuous carriage or shipment to or from a point beyond such zone, is partially exempt from regulation under 49 U.S.C. 13506(b)(1) includes and is comprised of all points as follows:

(a) The municipality of Lake Charles, La., itself;

(b) All points within a line drawn 6 miles beyond the municipal limits of Lake Charles;

(c) Those points in Calcasieu Parish, La., which are not within the area described in paragraph (b) of this section; and which are east of Louisiana Highway 27 (western section);

(d) All of any municipality any part of which is within the limits of the combined areas defined in paragraphs (b) and (c) of this section, and

(e) All of any municipality wholly surrounded, or so surrounded except for a water boundary, by the municipality of Lake Charles or by any other municipality included under the terms of paragraph (d) of this section.

[41 FR 56653, Dec. 29, 1976, as amended at 62 FR 15422, Apr. 1, 1997]

§ 372.211 Pittsburgh, Pa.

The zone adjacent to, and commercially a part of Pittsburgh within which transportation by motor vehicle in interstate or foreign commerce, not under common control, management, or arrangement for a continuous carriage or shipment to or from a point beyond such zone, is partially exempt from regulation under 49 U.S.C. 13506(b)(1) includes and is comprised of all points as follows:

(a) The municipality of Pittsburgh, Pa., itself;

(b) All points within a line drawn 15 miles beyond the municipal limits of Pittsburgh;

(c) Those points in Allegheny County, Pa., which are not within the area described in paragraph (b) of this section;

(d) All of any municipality any part of which is within the limits of the combined areas defined in paragraphs (b) and (c) of this section, and

(e) All of any municipality wholly surrounded, or so surrounded except for a water boundary, by the municipality of Pittsburgh by any other municipality included under the terms of paragraph (d) of this section.

[41 FR 56654, Dec. 29, 1976, as amended at 62 FR 15422, Apr. 1, 1997]

§ 372.213 Pueblo, Colo.

The zone adjacent to, and commercially a part of Pueblo, Colo., within which transportation by motor vehicle in interstate or foreign commerce, not under common control, management, or arrangement for a continuous carriage or shipment to or from a point beyond such zone, is partially exempt from regulations under 49 U.S.C. 13506(b)(1) includes and is comprised of all points as follows:

(a) The municipality of Pueblo, Colo., itself;

(b) All points within a line drawn 6 miles beyond the municipal limits of Pueblo;

(c) Those points in Pueblo County, Colo., which are not within the area described in paragraph (b) of this section;

(d) All of any municipality any part of which is within the limits of the combined areas defined in paragraphs (b) and (c) of this section, and

(e) All of any municipality wholly surrounded, or so surrounded except for a water boundary, by the municipality included under the terms of paragraph (d) of this section.

[41 FR 56654, Dec. 29, 1976, as amended at 62 FR 15422, Apr. 1, 1997]

§ 372.215 Ravenswood, W. Va.

The zone adjacent to, and commercially a part of Ravenswood, W. Va., within which transportation by motor vehicle in interstate or foreign commerce, not under common control, management, or arrangement for a continuous carriage or shipment to or from a point beyond such zone, is partially exempt from regulation under 49 U.S.C. 13506(b)(1) includes and is comprised of all points as follows:

(a) The municipality of Ravenswood, W. Va., itself;

(b) All points within a line drawn 4 miles beyond the municipal limits of Ravenswood;

(c) Those points in Jackson County, W. Va., which are not within the area described in paragraph (b) of this section, and which are north of U.S. Highway 33;

(d) All of any municipality any part of which is within the limits of the combined areas defined in paragraphs (b) and (c) of this section, and

(e) All of any municipality wholly surrounded, or so surrounded except for a water boundary, by the municipality of Ravenswood or by any other municipality included under the terms of paragraph (d) of this section.

[41 FR 56654, Dec. 29, 1976, as amended at 62 FR 15422, Apr. 1, 1997]

§ 372.217 Seattle, Wash.

The zone adjacent to, and commercially a part of Seattle, Wash., within which transportation by motor vehicle in interstate or foreign commerce, not under common control, management, or arrangement for a continuous carriage or shipment to or from a point beyond such zone, is partially exempt from regulation under 49 U.S.C. 13506(b)(1) includes and is comprised of all points as follows:

(a) The municipality of Seattle, Wash., itself;

(b) All points within a line drawn 15 miles beyond the municipal limits of Seattle;

(c) Those points in King County, Wash., which are not within the area described in paragraph (b) of this section, and which are west of a line beginning at the intersection of the line described in paragraph (b) of this section and Washington Highway 18, thence northerly along Washington Highway 18 to junction of Interstate Highway 90, thence westerly along Interstate Highway 90 to junction Washington Highway 203, thence northerly along Washington Highway 203 to the King County line; and those points in Snohomish County, Wash., which are not within the area described in paragraph (b) of this section and which are west of Washington Highway 9; and those points in Kitsap County, Wash., which are not within the area described in paragraph (b) of this section lying within the area bounded by a line beginning at the intersection of the line described in paragraph (b) of this section and Washington Highway 3 to the boundary of Olympic View Industrial Park/Bremerton-Kitsap County Airport, thence westerly, southerly, easterly, and northerly along the boundary of Olympic View Industrial Park/Bremerton-Kitsap County Airport to its juncture with Washington Highway 3 to its intersection with the line described in paragraph (b) of this section.

(d) All of any municipality any part of which is within the limits of the combined areas defined in paragraphs (b) and (c) of this section, and

(e) All of any municipality wholly surrounded, or so surrounded except for a water boundary, by the municipality of Seattle or by any other municipality included under the terms of paragraph (d) of this section.

[41 FR 56654, Dec. 29, 1976, as amended at 46 FR 25314, May 6, 1981; 62 FR 15422, Apr. 1, 1997]

§ 372.219 Washington, DC

The zone adjacent to, and commercially a part of Washington, D.C., within which transportation by motor vehicle in interstate or foreign commerce, not under common control, management, or arrangement for a continuous carriage or shipment to or from a point beyond such zone, is partially exempt from regulation under 49 U.S.C. 13506(b)(1) includes and is comprised of all points as follows:

(a) The municipality of Washington, D.C., itself;

(b) All points within a line drawn 15 miles beyond the municipal limits of Washington, DC

(c) All points in Fairfax and Loudoun Counties, VA, and all points in Prince William County, VA, including the City of Manassas, VA, and the City of Manassas Park, VA.

(d) All of any municipality any part of which is within the limits of the combined areas defined in paragraphs (b) and (c) of this section, and

(e) All of any municipality wholly surrounded, or so surrounded except for a water boundary, by the municipality of Washington, D.C., or by any other municipality included under the terms of paragraph (d) of this section.

[41 FR 56654, Dec. 29, 1976, as amended at 46 FR 56424, Nov. 17, 1981; 62 FR 15422, Apr. 1, 1997]

§ 372.221 Twin Cities.

For the purpose of determining commercial zones, utilizing the general population-mileage formula as set forth in § 372.241, each of the following combinations of cities shall be considered as a single municipality:

(a) Having a population equal to the sum of their combined populations, and

(b) Having boundaries comprised of their combined corporate limits, with the common portion thereof disregarded:

(1) Bluefield, Va.-W. Va.

(2) Bristol, Va.-Tenn.

(3) Davenport, Iowa, and Rock Island and Moline, Ill.

(4) Delmar, Del-Md.
(5) Harrison, Ohio-West Harrison, Ind.
(6) Junction City, Ark.-La.
(7) Kansas City, Mo.-Kansas City, Kans.
(8) Minneapolis-St. Paul, Minn.
(9) St. Louis, Mo.-East St. Louis, Ill.
(10) Texarkana, Ark.-Tex.
(11) Texhoma, Tex.-Okla.
(12) Union City, Ind.-Ohio.

[41 FR 56654, Dec. 29, 1976, as amended at 62 FR 15422, Apr. 1, 1997]

§ 372.223 Consolidated governments.

The zone adjacent to, and commercially a part of a consolidated government within which transportation by motor vehicle, in interstate or foreign commerce, not under common control, management, or arrangement for a continuous carriage or shipment to or from a point beyond the zone, is partially exempt from regulation under 49 U.S.C. 13506(b)(1) includes and is comprised of all points as follows:

(a) All points within the boundaries of the consolidated government.

(b) All points beyond the boundaries of the consolidated government which were at any time within the commercial zone of the formerly independent core municipality.

(c) When the present population of the formerly independent core municipality is identifiable, all points beyond the boundaries of the consolidated government which are within the territory determined by the most recent population-mileage formula measured from the limits of the formerly independent core municipality.

(d) All of any municipality wholly surrounded, or so surrounded except for a water boundary, by the consolidated government or by any other municipality included under the terms of paragraphs (a), (b), or (c) of this section.

[41 FR 56654, Dec. 29, 1976, as amended at 62 FR 15422, Apr. 1, 1997]

§ 372.225 Lexington-Fayette Urban County, Ky.

The zone adjacent to and commercially a part of Lexington-Fayette Urban County, Ky., within which transportation by motor vehicle, in interstate or foreign commerce, not under a common control, management, or arrangement for a continuous carriage or shipment to or from a point beyond the zone, is partially exempt from regulation under 49 U.S.C. 13506(b)(1) includes and is comprised of all points as follows:

(a) Lexington-Fayette Urban County, Ky., itself.

(b) All other municipalities and unincorporated areas within 5 miles of the intersection of U.S. Highway 27 (Nicholasville Road) with the corporate boundary line between Jessamine County, Ky., and Lexington-Fayette Urban County, Ky.

[39 FR 18769, May 30, 1974. Redesignated at 41 FR 56655, Dec. 29, 1976. Further redesignated at 55 FR 42198, Oct. 18, 1990, as amended at 62 FR 15422, Apr. 1, 1997]

§ 372.227 Syracuse, N.Y.

The zone adjacent to, and commercially a part of Syracuse, N.Y., within which transportation by motor vehicle, in interstate or foreign commerce, not under common control, management, or arrangement for shipment to or from points beyond such zone, is partially exempt from regulation under 49 U.S.C. 13506(b)(1) includes and is comprised of all points as follows:

(a) The municipality of Syracuse, N.Y., itself;

(b) All points within a line drawn 10 miles beyond the municipal limits of Syracuse;

(c) Those points in the towns of Van Buren and Lysander, Onondaga County, N.Y., which are not within the area described in paragraph (b) of this section, but which are within an area bounded by a line beginning at the intersection of new New York Highway 48 with the line described in (b) of this sectio, thence northwesterly along new New York Highway 48 to junction New York Highway 370, thence westerly along New York Highway 370 to junction Emerick Road, thence northerly along Emerick Road to junction Dunham Road, thence northerly along Dunham road to junction New York Highway 192, thence easterly along New York Highway 192 to junction new New York Highway 48, thence northerly along new New York Highway 48 to junction New York Highway 213, thence easterly along New York Highway 213 to junction New York Highway 213A, thence

easterly along New York Highway 213A to junction New York Highway 37, thence southerly along New York Highway 37 to its intersection with the line in (b) above;

(d) All of any municipality any part of which is within the limits of the combined area defined in (b) and (c) of this section, and

(e) All of any municipality wholly surrounded, or so surrounded except for a water boundary, by the municipality of Syracuse or any other municipality included under the terms of (d) of this section.

[42 FR 44816, Sept. 7, 1977. Redesignated at 55 FR 42198, Oct. 18, 1990, as amended at 62 FR 15422, Apr. 1, 1997]

§ 372.229 Spokane, Wash.

The zone adjacent to, and commercially a part of Spokane, WA, within which transportation by motor vehicle, in interstate or foreign commerce, not under control, management, or arrangement for shipment to or from points beyond such zone, is partially exempt from regulation under 49 U.S.C. 13506(b)(1) includes and is comprised of all points as follows:

(a) The municipality of Spokane, WA, itself,

(b) All points within a line drawn 8 miles beyond the municipal limits of Spokane;

(c) All points within that area more than 8 miles beyond the municipal limits of Spokane bounded by a line as follows: From the intersection of the line described in (b) of this section and U.S. Highway 2, thence westerly along U.S. Highway 2 to junction Brooks Road, thence southerly along Brooks Road to junction Hallett Road, thence easterly along Hallett Road to its intersection with the line described in (b) of this section;

(d) All of any municipality any part of which is within the limits of the combined areas in (b) and (c) of this section; and

(e) All of any municipality wholly surrounded, or so surrounded except for a water boundary, by the municipality of Spokane or any other municipality included under the terms of (d) of this section.

[45 FR 62085, Sept. 18, 1980. Redesignated and amended at 55 FR 42198, Oct. 18, 1990; 62 FR 15422, Apr. 1, 1997]

§ 372.231 Tacoma, Wash.

The zone adjacent to, and commercially a part of Tacoma, WA, within which transportation by motor vehicle, in interstate or foreign commerce, not under common control, management, or arrangement for shipment to or from points beyond such zone, is partially exempt from regulation under 49 U.S.C. 13506(b)(1) of the Interstate Commerce Act, includes and is comprised of all points as follows:

(a) The municipality of Tacoma, WA, itself;

(b) All points within a line drawn 8 miles beyond the municipal limits of Tacoma;

(c) Those points in Pierce County, WA, which are not within the area described in paragraph (b) of this section, but which are on Washington Highway 162 beginning at its intersection with the line described in paragraph (b) of this section, extending to and including Orting, WA, and all points within the Orting commercial zone.

(d) All of any municipality any part of which is within the limits of the combined area defined in (b) and (c) of this section, and

(e) All of any municipality wholly surrounded, or so surrounded except for a water boundary, by the municipality of Tacoma or any other municipality included under the terms of (d) of this section.

[45 FR 66460, Oct. 7, 1980. Redesignated at 55 FR 42198, Oct. 18, 1990, as amended at 62 FR 15422, Apr. 1, 1997]

§ 372.233 Chicago, IL.

The zone adjacent to, and commercially a part of Chicago, IL, within which transportation by motor vehicle, in interstate or foreign commerce, not under common control, management, or arrangement for a shipment to or from such zone, is partially exempt from regulation under 49 U.S.C. 13506(b)(1), includes and is comprised of all points as follows:

(a) The municipality of Chicago, IL, itself;

(b) All points within a line drawn 20 miles beyond the municipal limits of Chicago;

(c) All points in Lake County, IL.

(d) All of any municipality any part of which is within the limits of the combined area defined in paragraphs (b) and (c) of this section, and

(e) All of any municipality wholly surrounded, or so surrounded except for a water boundary, by the municipality included under the terms of paragraph (d) of this section.

[46 FR 11286, Feb. 6, 1981. Redesignated at 55 FR 42198, Oct. 18, 1990, as amended at 62 FR 15422, Apr. 1, 1997]

§ 372.235 New York, NY.

The zone adjacent to, and commercially a part of, New York, NY, within which transportation by motor vehicle, in interstate or foreign commerce, not under common control, management, or arrangement for shipment to or from points beyond such zone is partially exempt from regulation under 49 U.S.C. 13506(b)(1), includes and is comprised of all points as follows:

(a) The municipality of New York, NY, itself;

(b) All points within a line drawn 20 miles beyond the municipal limits of New York, NY;

(c) All points in Morris County, NJ;

(d) All of any municipality any part of which is within the limits of the combined areas defined in paragraphs (b) and (c); and

(e) All of any municipality wholly surrounded, or so surrounded except by a water boundary, by the municipality of New York or by any other municipality included under the terms of paragraph (d) of this section.

[50 FR 34478, Aug. 26, 1985. Redesignated at 55 FR 42198, Oct. 18, 1990, as amended at 62 FR 15422, Apr. 1, 1997]

§ 372.237 Cameron, Hidalgo, Starr, and Willacy Counties, TX.

(a) Transportation within a zone comprised of Cameron, Hidalgo, Starr, and Willacy Counties, TX, by motor carriers of property, in interstate or foreign commerce, not under common control, management, or arrangement for shipment to or from points beyond such zone, is partially exempt from regulation under 49 U.S.C. 13506(b)(1).

(b) To the extent that commercial zones of municipalities within the four counties (as determined under § 372.241) extend beyond the boundaries of this four-county zone, the areas of such commercial zones shall be considered to be part of the zone and partially exempt from regulation under 49 U.S.C. 13506(b)(1).

[51 FR 1815, Jan. 15, 1986. Redesignated at 55 FR 42198, Oct. 18, 1990, as amended at 62 FR 15422, Apr. 1, 1997]

§ 372.239 Definitions.

For the purposes of this part, the following terms are defined:

(a) *Municipality* means any city, town, village, or borough which has been created by special legislative act or which has been, otherwise, individually incorporated or chartered pursuant to general State laws, or which is recognized as such, under the Constitution or by the laws of the State in which located, and which has a local government. It does not include a town of the township or New England type.

(b) *Contiguous municipalities* means municipalities, as defined in paragraph (a) of this section, which have at some point a common municipal or corporate boundary.

(c) *Unincorporated area* means any area not within the corporate or municipal boundaries of any municipality as defined in paragraph (a) of this section.

[32 FR 20048, Dec. 20, 1967]

§ 372.241 Commercial zones determined generally, with exceptions.

The commercial zone of each municipality in the United States, with the exceptions indicated in the note at the end of this section, within which the transportation of passengers or property, in interstate or foreign commerce, when not under a common control, management, or arrangement for a continuous carriage or shipment to or from a point without such zone, is exempt from all provisions of 49 U.S.C. subtitle IV, part B shall be deemed to consist of:

(a) The municipality itself, hereinafter called the base municipality;

(b) All municipalities which are contiguous to the base municipality;

(c) All other municipalities and all unincorporated areas within the United States which are adjacent to the base municipality as follows:

(1) When the base municipality has a population less than 2,500 all unincorporated areas within 3 miles of its corporate limits and all of any other municipality any part of which is within 3 miles of the corporate limits of the base municipality,

(2) When the base municipality has a population of 2,500 but less than 25,000 all unincorporated areas within 4 miles of its corporate limits and all of any other municipality any part of which is within 4 miles of the corporate limits of the base municipality.

(3) When the base municipality has a population of 25,000 but less than 100,000 all unincorporated areas within 6 miles of its corporate limits and all of any other municipality any part of which is within 6 miles of the corporate limits of the base municipality, and

(4) When the base municipality has a population of 100,000 but less than 200,000 all unincorporated areas within 8 miles of its corporate limits and all of any other municipality any part of which is within 8 miles of the corporate limits of the base municipality.

(5) When the base municipality has a population of 200,000 but less than 500,000 all unincorporated areas within 10 miles of its corporate limits and all of any other municipality any part of which is within 10 miles of the corporate limits of the base municipality.

(6) When the base municipality has a population of 500,000 but less than 1 million, all unincorporated areas within 15 miles of its corporate limits and all of any other municipality any part of which is within 15 miles of the corporate limits of the base municipality.

(7) When the base municipality has a population of 1 million or more, all unincorporated areas within 20 miles of its corporate limits and all of any other municipality any part of which is within 20 miles of the corporate limits of the base municipality, and

(d) All municipalities wholly surrounded, or so surrounded except for a water boundary, by the base municipality, by any municipality contiguous thereto, or by any municipality adjacent thereto which is included in the commercial zone of such base municipality under the provisions of paragraph (c) of this section.

NOTE: Except: Municipalities the commercial zones of which have been or are hereafter individually or specially determined.

[32 FR 20048, Dec. 20, 1967, as amended at 34 FR 9870, June 26, 1969; 34 FR 15482, Oct. 4, 1969; 41 FR 56655, Dec. 29, 1976; 62 FR 15422, Apr. 1, 1997]

§ 372.243 Controlling distances and population data.

In the application of § 372.241:

(a) Air-line distances or mileages about corporate limits of municipalities shall be used.

(b) The population of any municipality shall be deemed to be the highest figure shown for that municipality in any decennial census since (and including) the 1940 decennial census.

(c) Contraction of municipal boundaries will not alter the size of commercial zones.

[32 FR 20040, Dec. 20, 1967, as amended at 37 FR 15701, Aug. 4, 1972; 50 FR 10233, Mar. 14, 1985; 62 FR 15422, Apr. 1, 1997]

Subpart C—Terminal Areas

AUTHORITY: 49 Stat. 543, 544 and 546, as amended; 49 U.S.C. 302, 303, 304.

SOURCE: 32 FR 20049, Dec. 20, 1967, unless otherwise noted. Redesignated at 61 FR 54708, Oct. 21, 1996.

§ 372.300 Distances and population data.

In the application of this subpart, distances and population data shall be determined in the same manner as provided in 49 CFR 372.243. See also definitions in 49 CFR 372.239.

[62 FR 15422, Apr. 1, 1997]

§ 372.301 Terminal areas of motor carriers and freight forwarders at municipalities served.

The terminal area within the meaning of 49 U.S.C. 13503 of any motor carrier of property or freight forwarder subject to 49 U.S.C. subtitle IV, part B at any municipality authorized to be served by such motor carrier of property or motor carrier of passengers in the transportation of express or freight forwarder, within which transportation

by motor carrier in the performance of transfer, collection, or delivery services may be performed by, or for, such motor carrier of property or freight forwarder without compliance with the provisions of 49 U.S.C. subtitle IV, part B consists of and includes all points or places which are:

(a) Within the commercial zone, as defined by the Secretary, of that municipality, and

(b) Not beyond the limits of the operating authority of such motor carrier of property or freight forwarder.

[62 FR 15422, Apr. 1, 1997]

§ 372.303 Terminal areas of motor carriers and household goods freight forwarders at unincorporated communities served.

The terminal areas within the meaning of 49 U.S.C. 13503 of any motor carrier of property or freight forwarder subject to 49 U.S.C. subtitle IV, part B, at any unincorporated community having a post office of the same name which is authorized to be served by such motor carrier of property or motor carrier of passengers in the transportation of express or freight forwarder, within which transportation by motor vehicle in the performance of transfer, collection, or delivery services may be performed by, or for, such motor carrier of property or freight forwarder without compliance with the provisions of 49 U.S.C. subtitle IV, part B, consists of:

(a) All points in the United States which are located within the limits of the operating authority of the motor carrier of property or freight forwarder involved, and within 3 miles of the post office at such authorized unincorporated point if it has a population less than 2,500, within 4 miles if it has a population of 2,500 but less than 25,000, or within 6 miles if it has a population of 25,000 or more;

(b) All of any municipality any part of which is included under paragraph (a) of this section; and

(c) Any municipality wholly surrounded by any municipality included under paragaph (b) of this section, or so wholly surrounded except for a water boundary.

[32 FR 20049, Dec. 20, 1967, as amended at 41 FR 56655, Dec. 29, 1976; 51 FR 44297, Dec. 9, 1986; 62 FR 15423, Apr. 1, 1997]

PART 373—RECEIPTS AND BILLS

Subpart A—Motor Carrier Receipts and Bills

Sec.
373.101 Motor Carrier bills of lading.
373.103 Expense bills.
373.105 Low value packages.

Subpart B—Freight Forwarders; Bills of Lading

373.201 Bills of lading for freight forwarders.

AUTHORITY: 49 U.S.C. 13301 and 14706; 49 CFR 1.48.

Subpart A—Motor Carrier Receipts and Bills

AUTHORITY: 5 U.S.C. 553, 49 U.S.C. 721(a), 13710, 14122.

SOURCE: 55 FR 11198, Mar. 27, 1990, unless otherwise noted. Redesignated at 61 FR 54708, Oct. 21, 1996.

§ 373.101 Motor Carrier bills of lading.

Every motor common carrier shall issue a receipt or bill of lading for property tendered for transportation in interstate or foreign commerce containing the following information:

(a) Names of consignor and consignee.

(b) Origin and destination points.

(c) Number of packages.

(d) Description of freight.

(e) Weight, volume, or measurement of freight (if applicable to the rating of the freight).

The carrier shall keep a record of this information as prescribed in 49 CFR part 379.

[55 FR 11198, Mar. 27, 1990, as amended at 56 FR 30874, July 8, 1991; 62 FR 15423, Apr. 1, 1997]

§ 373.103 Expense bills.

(a) *Property*. Every motor common carrier shall issue a freight or expense bill for each shipment transported containing the following information:

(1) Names of consignor and consignee (except on a reconsigned shipment, not the name of the original consignor).

(2) Date of shipment.

(3) Origin and destination points (except on a reconsigned shipment, not the original shipping point unless the final consignee pays the charges from that point).

(4) Number of packages.

(5) Description of freight.

(6) Weight, volume, or measurement of freight (if applicable to the rating of the freight).

(7) Exact rate(s) assessed.

(8) Total charges due, including the nature and amount of any charges for special service and the points at which such service was rendered.

(9) Route of movement and name of each carrier participating in the transportation.

(10) Transfer point(s) through which shipment moved.

(11) Address where remittance must be made or address of bill issuer's principal place of business.

The shipper or receiver owing the charges shall be given the original freight or expense bill and the carrier shall keep a copy as prescribed at 49 CFR part 379. If the bill is electronically transmitted (when agreed to by the carrier and payor), a receipted copy shall be given to the payor upon payment.

(b) *Charter service.* Every motor passenger common carrier providing charter service shall issue an expense bill containing the following information:

(1) Serial number, consisting of one of a series of consecutive numbers assigned in advance and imprinted on the bill.

(2) Name of carrier.

(3) Names of payor and organization, if any, for which transportation is performed.

(4) Date(s) transportation was performed.

(5) Origin, destination, and general routing of trip.

(6) Identification and seating capacity of each vehicle used.

(7) Number of persons transported.

(8) Mileage upon which charges are based, including any deadhead mileage, separately noted.

(9) Applicable rates per mile, hour, day, or other unit.

(10) Itemized charges for transportation, including special services and fees.

(11) Total charges assessed and collected.

The carrier shall keep a copy of all expense bills issued for the period prescribed at 49 CFR part 379. If any expense bill is spoiled, voided, or unused for any reason, a copy or written record of its disposition shall be retained for a like period.

[55 FR 11198, Mar. 27, 1990, as amended at 59 FR 2303, Jan. 14, 1994; 61 FR 19860, May 3, 1996; 62 FR 15423, Apr. 1, 1997]

§ 373.105 Low value packages.

The carrier and shipper may elect to waive the above provisions and use a more streamlined recordkeeping or documentation system for distribution of ''low value'' packages. This includes the option of shipping such packages under the provisions of 49 U.S.C. 14706(c). The shipper is responsible ultimately for determining which packages should be designated as low value. A useful guideline for this determination is an invoice value less than or equal to the costs of preparing a loss or damage claim.

[55 FR 11198, Mar. 27, 1990. Redesignated at 61 FR 54708, Oct. 21, 1996, as amended at 62 FR 15423, Apr. 1, 1997]

Subpart B—Freight Forwarders; Bills of Lading

AUTHORITY: 49 U.S.C. 10701, 10702, 10730, 10741, 10766, 10927, 11101, and 11707.

§ 373.201 Bills of lading for freight forwarders.

Every household goods freight forwarder (HHGFF) shall issue the shipper through bills of lading, covering transportation from origin to ultimate destination, on each shipment for which it arranges transportation in interstate commerce. Where a motor common carrier receives freight at the origin and issues a receipt therefor on its form with a notation showing the HHGFF's name, the HHGFF, upon receiving the shipment at the ''on line'' or consolidating station, shall issue a

through bill of lading on its form as of the date the carrier receives the shipment.

[55 FR 11201, Mar. 27, 1990. Redesignated at 61 FR 54708, Oct. 21, 1996.]

PART 374—PASSENGER CARRIER REGULATIONS

Subpart A—Discrimination in Operations of Interstate Motor Common Carriers of Passengers

Sec.

374.101 Discrimination prohibited.
374.103 Notice to be printed on tickets.
374.105 Discrimination in terminal facilities.
374.107 Notice to be posted at terminal facilities.
374.109 Carriers not relieved of existing obligations.
374.111 Reports of interference with regulations.
374.113 Definitions.

Subpart B—Limitation of Smoking on Interstate Passenger Carrier Vehicles

374.201 Prohibition against smoking on interstate passenger-carrying motor vehicles.

Subpart C—Adequacy of Intercity Motor Common Carrier Passenger Service

374.301 Applicability.
374.303 Definitions.
374.305 Ticketing and information.
374.307 Baggage service.
374.309 Terminal facilities.
374.311 Service responsibility.
374.313 Equipment.
374.315 Transportation of passengers with disabilities.
374.317 Identification—bus and driver.
374.319 Relief from provisions.

Subpart D—Notice of and Procedures for Baggage Excess Value Declaration

374.401 Minimum permissible limitations for baggage liability.
374.403 Notice of passenger's ability to declare excess value on baggage.
374.405 Baggage excess value declaration procedures.

Subpart E—Incidental Charter Rights

374.501 Applicability.
374.503 Authority.
374.505 Exceptions.

AUTHORITY: 49 U.S.C. 13301 and 14101; 49 CFR 1.48.

Subpart A—Discrimination in Operations of Interstate Motor Common Carriers of Passengers

AUTHORITY: 52 Stat. 1237, 49 U.S.C. sec. 304.

SOURCE: 36 FR 1338, Jan. 28, 1971, unless otherwise noted. Redesignated at 61 FR 54709, Oct. 21, 1996.

§ 374.101 Discrimination prohibited.

No motor common carrier of passengers subject to 49 U.S.C. subtitle IV, part B shall operate a motor vehicle in interstate or foreign commerce on which the seating of passengers is based upon race, color, creed, or national origin.

[36 FR 1338, Jan. 28, 1971. Redesignated at 61 FR 54709, Oct. 21, 1996, as amended at 62 FR 15423, Apr. 1, 1997]

§ 374.103 Notice to be printed on tickets.

Every motor common carrier of passengers subject to 49 U.S.C. subtitle IV, part B shall cause to be printed on every ticket sold by it for transportation on any vehicle operated in interstate or foreign commerce a plainly legible notice as follows: ''Seating aboard vehicles operated in interstate or foreign commerce is without regard to race, color, creed, or national origin.''

NOTE: The following interpretation of the provisions of § 374.103 (formerly § 1055.2) appears at 27 FR 230, Jan. 9, 1962:

The words, ''Seating aboard vehicles operated in interstate or foreign commerce is without regard to race, color, creed, or national origin'', should appear on the face of every ticket coming within the purview of the section. If the ticket is in parts or consists of additional elements, such as coupons, identification stubs, or checks, it shall be sufficient for the purposes of § 374.103 that the notice appear only once on the ticket and be placed on the face of that portion of the ticket which is held by the passenger.

[36 FR 1338, Jan. 28, 1971. Redesignated at 61 FR 54709, Oct. 21, 1996, as amended at 62 FR 15423, Apr. 1, 1997]

§ 374.105 Discrimination in terminal facilities.

No motor common carrier of passengers subject to 49 U.S.C. subtitle IV, part B shall in the operation of vehicles in interstate or foreign commerce provide, maintain arrangements for, utilize, make available, adhere to any understanding for the availability of, or follow any practice which includes the availability of, any terminal facilities which are so operated, arranged, or maintained as to involve any separation of any portion thereof, or in the use thereof on the basis of race, color, creed, or national origin.

[36 FR 1338, Jan. 28, 1971. Redesignated at 61 FR 54709, Oct. 21, 1996, as amended at 62 FR 15423, Apr. 1, 1997]

§ 374.107 Notice to be posted at terminal facilities.

No motor common carrier of passengers subject to 49 U.S.C. subtitle IV, part B shall in the operation of vehicles in interstate or foreign commerce utilize any terminal facility in which there is not conspicuously displayed and maintained so as to be readily visible to the public a plainly legible sign or placard containing the full text of these regulations. Such sign or placard shall be captioned: ''Public Notice: Regulations Applicable to Vehicles and Terminal Facilities of Interstate Motor Common Carriers of Passengers, by order of the Secretary, U.S. Department of Transportation.''

[36 FR 1338, Jan. 28, 1971. Redesignated at 61 FR 54709, Oct. 21, 1996, as amended at 62 FR 15423, Apr. 1, 1997]

§ 374.109 Carriers not relieved of existing obligations.

Nothing in this regulation shall be construed to relieve any interstate motor common carrier of passengers subject to 49 U.S.C. subtitle IV, part B of any of its obligations under 49 U.S.C. subtitle IV, part B or its certificate(s) of public convenience and necessity.

[36 FR 1338, Jan. 28, 1971. Redesignated at 61 FR 54709, Oct. 21, 1996, as amended at 62 FR 15423, Apr. 1, 1997]

§ 374.111 Reports of interference with regulations.

Every motor common carrier of passengers subject to 49 U.S.C. subtitle IV, part B operating vehicles in interstate or foreign commerce shall report to the Secretary, within fifteen (15) days of its occurrence, any interference by any person, municipality, county, parish, State, or body politic with its observance of the requirements of these regulations in this part. Such report shall include a statement of the action that such carrier may have taken to eliminate any such interference.

[36 FR 1338, Jan. 28, 1971. Redesignated at 61 FR 54709, Oct. 21, 1996, as amended at 62 FR 15423, Apr. 1, 1997]

§ 374.113 Definitions.

For the purpose of these regulations the following terms and phrases are defined:

(a) *Terminal facilities.* As used in these regulations the term ''terminal facilities'' means all facilities, including waiting room, rest room, eating, drinking, and ticket sales facilities which a motor common carrier makes available to passengers of a motor vehicle operated in interstate or foreign commerce as a regular part of their transportation.

(b) *Separation.* As used in § 374.105, the term ''separation'' includes, among other things, the display of any sign indicating that any portion of the terminal facilities are separated, allocated, restricted, provided, available, used, or otherwise distinguished on the basis of race, color, creed, or national origin.

[36 FR 1338, Jan. 28, 1971. Redesignated at 61 FR 54709, Oct. 21, 1996, as amended at 62 FR 15423, Apr. 1, 1997]

Subpart B—Limitation of Smoking on Interstate Passenger Carrier Vehicles

AUTHORITY: 49 U.S.C. 10101, 10102, 10321, 10922, and 11101, and 5 U.S.C. 553.

§ 374.201 Prohibition against smoking on interstate passenger-carrying motor vehicles.

(a) All motor common carriers of passengers subject to 49 U.S.C. subtitle IV,

part B, shall prohibit smoking (including the carrying of lit cigars, cigarettes, and pipes) on vehicles transporting passengers in scheduled or special service in interstate commerce.

(b) Each carrier shall take such action as is necessary to ensure that smoking by passengers, drivers, and other employees is not permitted in violation of this section. This shall include making appropriate announcements to passengers, the posting of the international no-smoking symbol, and the posting of signs in all vehicles transporting passengers in letters in sharp color contrast to the background, and of such size, shape, and color as to be readily legible. Such signs and symbols shall be kept and maintained in such a manner as to remain legible and shall indicate that smoking is prohibited by Federal regulation.

(c) The provisions of paragraph (a) of this section shall not apply to charter operations as defined in § 374.503 of this part.

[56 FR 1745, Jan. 17, 1991. Redesignated at 61 FR 54709, Oct. 21, 1996, as amended at 62 FR 15423, Apr. 1, 1997]

Subpart C—Adequacy of Intercity Motor Common Carrier Passenger Service

AUTHORITY: 5 U.S.C. 553 and 559 and 49 U.S.C. 10102, 10321, 10701, 10702–10705, 10708, 10721, 10722, 10723, 10724, 10730, 10741, 10761, 10762, 10764, 10922, 11101, 11141–11145, 11701, 11702, 11707, 11708, 11901, 11904, 11906, 11909, 11910, and 11914.

SOURCE: 55 FR 11199, Mar. 27, 1990, unless otherwise noted. Redesignated at 61 FR 54709, Oct. 21, 1996.

§ 374.301 Applicability.

These rules govern only motor passenger common carriers conducting regular-route operations.

§ 374.303 Definitions.

(a) *Carrier* means a motor passenger common carriers.

(b) *Bus* means a passenger-carrying vehicle, regardless of design or seating capacity, used in a carrier's authorized operations.

(c) *Facility* means any structure provided by or for a carrier at or near which buses pick up or discharge passengers.

(d) *Terminal* means a facility operated or used by a carrier chiefly to furnish passengers transportation services and accommodations.

(e) *Station* means a facility, other than a terminal, operated by or for a carrier to accommodate passengers.

(f) *Service* means passenger transportation by bus between authorized points or over authorized routes.

(g) *Commuter service,* notwithstanding 49 CFR 1312.1(b)(33), means passenger transportation wholly between points not more than 100 airline miles apart and not involving through-bus, connecting, or interline services to or from points beyond 100 airline miles. The usual characteristics of commuter service include reduced fare, multiple-ride, and commutation tickets, and peak morning and evening operations.

(h) *Baggage* means property a passenger takes with him for his personal use or convenience.

(i) *Restroom* means a room in a bus or terminal equipped with a toilet, washbowl, soap or a reasonable alternative, mirror, wastebasket, and toilet paper.

§ 374.305 Ticketing and information.

(a) *Information service.* (1) During business hours at each terminal or station, information shall be provided as to schedules, tickets, fares, baggage, and other carrier services.

(2) Carrier agents and personnel who sell or offer to sell tickets, or who provide information concerning tickets and carrier services, shall be competent and adequately informed.

(b) *Telephone information service.* Every facility where tickets are sold shall provide telephonic information to the traveling public, including current bus schedules and fare information, when open for ticket sales.

(c) *Schedules.* Printed, regular-route schedules shall be provided to the traveling public at all facilities where tickets for such services are sold. Each schedule shall show the points along the carrier's route(s) where facilities are located or where the bus trips originate or terminate, and each schedule shall indicate the arrival or departure time for each such point.

(d) *Ticket refunds.* Each carrier shall refund unused tickets upon request, consistent with its governing tariff, at each place where tickets are sold, within 30 days after the request.

(e) *Announcements.* No scheduled bus (except in commuter service) shall depart from a terminal or station until a public announcement of the departure and boarding point has been given. The announcement shall be given at least 5 minutes before the initial departure and before departures from points where the bus is scheduled to stop for more than 5 minutes.

§ 374.307 Baggage service.

(a) *Checking procedures.* (1) Carriers shall issue receipts, which may be in the form of preprinted tickets, for all checked services baggage.

(2)(i) If baggage checking service is not provided at the side of the bus, all baggage checked at a baggage checking counter at least 30 minutes but not more than 1 hour before departure shall be transported on the same schedule as the ticketed passenger.

(ii) If baggage checking service is provided at the side of the bus, passengers checking baggage at the baggage checking counter less than 30 minutes before the scheduled departure shall be notified that their baggage may not travel on the same schedule. Such baggage must then be placed on the next available bus to its destination. All baggage checked at the side of the bus during boarding, or at alternative locations provided for such purpose, shall be transported on the same schedule as the ticketed passenger.

(b) *Baggage security.* All checked baggage shall be placed in a secure or attended area prohibited to the public. Baggage being readied for loading shall not be left unattended.

(c) *Baggage liability.* (1) No carrier may totally exempt its liability for articles offered as checked baggage, unless those articles have been exempted by the Secretary. (Other liability is subject to subpart D of this part). A notice listing exempted articles shall be prominently posted at every location where baggage is accepted for checking.

(2) Carriers may refuse to accept as checked baggage and, if unknowingly accepted, may disclaim liability for loss or damage to the following articles:

(i) Articles whose transportation as checked baggage is prohibited by law or regulation;

(ii) Fragile or perishable articles, articles whose dimensions exceed the size limitations in the carrier's tariff, receptacles with articles attached or protruding, guns, and materials that have a disagreeable odor;

(iii) Money; and

(iv) Those other articles that the Secretary exempts upon petition by the carrier.

(3) Carriers need not offer excess value coverage on articles of extraordinary value (including, but not limited to, negotiable instruments, papers, manuscripts, irreplaceable publications, documents, jewelry, and watches).

(d) *Express shipments.* Passengers and their baggage always take precedence over express shipments.

(e) *Baggage at destination.* All checked baggage shall be made available to the passenger within a reasonable time, not to exceed 30 minutes, after arrival at the passenger's destination. If not, the carrier shall deliver the baggage to the passenger's local address at the carrier's expense.

(f) *Lost or delayed baggage.* (1) Checked baggage that cannot be located within 1 hour after the arrival of the bus upon which it was supposed to be transported shall be designated as lost. The carrier shall notify the passenger at that time and furnish him with an appropriate tracing form.

(2) Every carrier shall make available at each ticket window and baggage counter a single form suitable both for tracing and for filing claims for lost or misplaced baggage. The form shall be prepared in duplicate and signed by the passenger and carrier representative. The carrier or its agent shall receive the signed original, with any necessary documentation and additional information, and the claim check, for which a receipt shall be given. The passenger shall retain the duplicate copy.

(3) The carrier shall make immediate and diligent efforts to recover lost baggage.

(4) A passenger may fill out a tracing form for lost unchecked baggage. The carrier shall forward recovered unchecked baggage to the terminal or station nearest the address shown on the tracing form and shall notify the passenger that the baggage will be held on a will-call basis.

(g) *Settlement of claims.* Notwithstanding 49 CFR 370.9, if lost checked baggage cannot be located within 15 days, the carrier shall immediately process the matter as a claim. The date on which the carrier or its agent received the tracing form shall be considered the first day of a 60-day period in which a claim must be resolved by a firm offer of settlement or by a written explanation of denial of the claim.

[55 FR 11199, Mar. 27, 1990. Redesignated at 61 FR 54709, Oct. 21, 1996, as amended at 62 FR 15423, Apr. 1, 1997]

§ 374.309 Terminal facilities.

(a) *Passenger security.* All terminals and stations must provide adequate security for passengers and their attendants and be regularly patrolled.

(b) *Outside facilities.* At terminals and stations that are closed when buses are scheduled to arrive or depart, there shall be available, to the extent possible, a public telephone, outside lighting, posted schedule information, overhead shelter, information on local accommodations, and telephone numbers for local taxi service and police.

(c) *Maintenance.* Terminals shall be clean.

§ 374.311 Service responsibility.

(a) *Schedules.* Carriers shall establish schedules that can be reasonably met, including connections at junction points, to serve adequately all authorized points.

(b) *Continuity of service.* No carrier shall change an existing regular-route schedule without first filing a written notice with the FHWA's Regional Office(s). The carrier shall display conspicuously a copy of such notice in each facility and on each bus affected. Such notice shall be displayed for a reasonable time before it becomes effective and shall contain the carrier's name, a description of the proposed schedule change, the effective date thereof, the reasons for the change, the availability of alternate service, and the name and address of the carrier representative passengers may contact.

(c) *Trip interruptions.* A carrier shall mitigate, to the extent possible, any passenger inconvenience it causes by disrupting travel plans.

(d) *Seating and reservations.* A carrier shall provide sufficient buses to meet passengers' normal travel demands, including ordinary weekend and usual seasonal or holiday demand. Passengers (except commuters) shall be guaranteed, to the extent possible, passage and seating.

(e) *Inspection of rest stops.* Each carrier shall inspect periodically all rest stops it uses to ensure that they are clean.

[55 FR 11199, Mar. 27, 1990. Redesignated at 61 FR 54709, Oct. 21, 1996, as amended at 62 FR 15423, Apr. 1, 1997]

§ 374.313 Equipment.

(a) *Temperature control.* A carrier shall maintain a reasonable temperature on each bus (except in commuter service).

(b) *Restrooms.* Each bus (except in commuter service) seating more than 14 passengers (not including the driver) shall have a clean, regularly maintained restroom, free of offensive odor. A bus may be operated without a restroom if it makes reasonable rest stops.

(c) *Bus servicing.* Each bus shall be kept clean, with all required items in good working order.

§ 374.315 Transportation of passengers with disabilities.

Service provided by a carrier to passengers with disabilities is governed by the provisions of 42 U.S.C. 11201 *et seq.*, and regulations promulgated thereunder by the Secretary of Transportation (49 CFR parts 27, 37, and 38) and the Attorney General (28 CFR part 36), incorporating the guidelines established by the Architectural and Transportation Barriers Compliance Board (36 CFR part 1191).

[57 35764, Aug. 11, 1992]

§ 374.317 Identification—bus and driver.

Each bus and driver providing service shall be identified in a manner visible

to passengers. The driver may be identified by name or company number.

§ 374.319 Relief from provisions.

(a) *Petitions.* Where compliance with any rule would impose an undue burden on a carrier, it may petition the Federal Highway Administration either to treat it as though it were conducting a commuter service or to waive the rule. The request for relief must be justified by appropriate verified statements.

(b) *Notice to the public.* The carrier shall display conspicuously, for at least 30 days, in each facility and on each bus affected, a notice of the filing of any petition. The notice shall contain the carrier's name and address, a concise description of and reasons for the relief sought, and a statement that any interested person may file written comments with the Federal Highway Administration (with one copy mailed to the carrier) on or before a specific date that is at least 30 days later than the date the notice is posted.

[55 FR 11199, Mar. 27, 1990. Redesignated at 61 FR 54709, Oct. 21, 1996, as amended at 62 FR 15423, Apr. 1, 1997]

Subpart D—Notice of and Procedures for Baggage Excess Value Declaration

AUTHORITY: 49 U.S.C. 1 and 301 *et seq.* and 5 U.S.C. 553 and 559.

SOURCE: 40 FR 1249, Jan. 7, 1975, unless otherwise noted. Redesignated at 61 FR 54709, Oct. 21, 1996.

§ 374.401 Minimum permissible limitations for baggage liability.

(a) Motor common carriers of passengers and baggage subject to 49 U.S.C. 13501 may not publish tariff provisions limiting their liability for loss or damage to baggage checked by a passenger transported in regular route or special operations unless:

(1) The amount for which liability is limited is $250 or greater per adult fare, and

(2) The provisions permit the passenger, for an additional charge, to declare a value in excess of the limited amount, and allow the passenger to recover the increased amount (but not higher than the actual value) in event of loss or damage. The carriers may publish a maximum value for which they will be liable, but that maximum value may not be less than $1,000. Appropriate identification must be attached securely by the passenger to each item of baggage checked, indicating in a clear and legible manner the name and address to which the baggage should be forwarded if lost and subsequently recovered. Identification tags shall be made immediately available by the carriers to passengers upon request.

(3) Carriers need not offer excess value coverage on articles listed in § 374.307(c)(3).

(49 U.S.C. 10321, 5 U.S.C. 553)

[46 FR 22899, Apr. 22, 1981, as amended at 47 FR 21840, May 20, 1982; 62 FR 15423, Apr. 1, 1997]

§ 374.403 Notice of passenger's ability to declare excess value on baggage.

(a) All motor common carriers of passengers and baggage subject to 49 U.S.C. subtitle IV, part B, which provide in their tariffs for the declaration of baggage in excess of a free baggage allowance limitation, shall provide clear and adequate notice to the public of the opportunity to declare such excess value on baggage.

(b) The notice referred to in paragraph (a) of this section shall be in large and clear print, and shall state as follows:

NOTICE—BAGGAGE LIABILITY

This motor carrier is not liable for loss or damage to properly identified baggage in an amount exceeding $____. If a passenger desires additional coverage for the value of his baggage he may, upon checking his baggage, declare that his baggage has a value in excess of the above limitation and pay a charge as follows:

IDENTIFY YOUR BAGGAGE

Under FHWA regulations, all baggage must be properly identified. Luggage tags should indicate clearly the name and address to which lost baggage should be forwarded. Free luggage tags are available at all ticket windows and baggage counters.

The statement of charges for excess value declaration shall be clear, and any other pertinent provisions may be added at the bottom in clear and readable print.

(c) The notice referred to in paragraphs (a) and (b) of this section shall be (1) placed in a position near the ticket seller, sufficiently conspicuous to apprise the public of its provisions, (2) placed on a form to be attached to each ticket issued (and the ticket seller shall, where possible, provide oral notice to each ticket purchaser to read the form attached to the ticket), (3) placed in a position at or near any location where baggage may be checked, sufficiently conspicuous to apprise each passenger checking baggage of its provisions, and (4) placed in a position at each boarding point or waiting area used by the carrier at facilities maintained by the carrier or its agents, sufficiently conspicuous to apprise each boarding passenger of the provisions of the said notice.

[40 FR 1249, Jan. 7, 1975, as amended at 62 FR 15423, Apr. 1, 1997]

§ 374.405 Baggage excess value declaration procedures.

All motor common carriers of passengers and baggage subject to 49 U.S.C. subtitle IV, part B, which provide in their tariffs for the declaration of baggage value in excess of a free baggage allowance limitation, shall provide for the declaration of excess value on baggage at any time or place where provision is made for baggage checking, including (a) at a baggage checking counter until 15 minutes before scheduled boarding time, and (b) at the side of the bus or at a baggage checking counter in reasonable proximity to the boarding area during boarding at a terminal or any authorized service point.

[40 FR 1249, Jan. 7, 1975, as amended at 62 FR 15423, Apr. 1, 1997]

Subpart E—Incidental Charter Rights

AUTHORITY: 5 U.S.C. 553 and 559 and 49 U.S.C. 10321, 10922, and 10932.

SOURCE: 54 FR 46619, Nov. 6, 1989, unless otherwise noted. Redesignated at 61 FR 54709, Oct. 21, 1996.

§ 374.501 Applicability.

The regulations in this part apply to incidental charter rights authorized under 49 U.S.C. 13506 [49 U.S.C. 10932(c)]. These regulations do not apply to interpreting authority contained in a certificate to transport passengers in special and/or charter operations.

[54 FR 46619, Nov. 6, 1989. Redesignated at 61 FR 54709, Oct. 21, 1996, as amended at 62 FR 15423, Apr. 1, 1997]

§ 374.503 Authority.

Motor carriers transporting passengers, in interstate or foreign commerce, over regular routes authorized in a certificate issued as a result of an application filed before January 2, 1967, may transport special or chartered parties, in interstate or foreign commerce, between any points and places in the United States (including Alaska and Hawaii). The term ''special or chartered party'' means a group of passengers who, with a common purpose and under a single contract, and at a fixed charge for the vehicle in accordance with the carrier's tariff, have acquired the exclusive use of a passenger-carrying motor vehicle to travel together as a group to a specified destination or for a particular itinerary.

§ 374.505 Exceptions.

(a) Incidental charter rights do not authorize the transportation of passengers to whom the carrier has sold individual tickets or with whom the carrier has made separate and individual transportation arrangements.

(b) Service provided under incidental charter rights may not be operated between the same points or over the same route so frequently as to constitute a regular-route service.

(c) Passenger transportation within the Washington Metropolitan Area Transit District (as defined in the Washington Metropolitan Area Transportation Regulation Compact, Pub. L. No. 86–794, 74 Stat. 1031 (1960), as amended by Pub. L. No. 87–767, 76 Stat. (1962) is not authorized by these regulations, but is subject to the jurisdiction and regulations of the Washington Metropolitan Area Transportation Commission.

(d) A private or public recipient of governmental assistance (within the meaning of 49 U.S.C. 13902(b)(8)) may

provide service under incidental charter rights only for special or chartered parties originating in the area in which the private or public recipient provides regularly scheduled mass transportation services under the specific qualifying certificate that confers its incidental charter rights.

[54 FR 46619, Nov. 6, 1989. Redesignated at 61 FR 54709, Oct. 21, 1996, as amended at 62 FR 15423, Apr. 1, 1997]

PART 375—TRANSPORTATION OF HOUSEHOLD GOODS IN INTERSTATE OR FOREIGN COMMERCE

Sec.

375.1 Applicability and definitions.
375.2 Information for shippers.
375.3 Estimates of charges.
375.4 Final charges on shipments subject to minimum weight or volume provisions.
375.5 Order for service.
375.6 Receipt or bill of lading.
375.7 Determination of weights.
375.8 Reasonable dispatch.
375.9 Notification of charges.
375.10 Signed receipt for shipment-release prohibited.
375.11 Selling of insurance to shippers.
375.12 Liability of carriers.
375.13 Complaint and inquiry handling.
375.14 Agency agreements.
375.15 Collection of freight charges on household goods shipments involving loss or destruction in transit.
375.16 Collection of freight charges on shipments transported on more than one vehicle.
375.17 Advertising by motor common carriers of household goods.
375.18 Preparation and filing of annual performance report.
375.19 Use of charge card plans.

AUTHORITY: 5 U.S.C. 553; 49 U.S.C. 13301 and 14104; 49 CFR 1.48.

SOURCE: 46 FR 16218, Mar. 11, 1981, unless otherwise noted. Redesignated at 61 FR 54707, Oct. 21, 1996.

§375.1 Applicability and definitions.

(a) The regulations in this part are applicable to the operations of motor carriers engaged in the transportation of household goods as defined in paragraph (b)(1) of this section in interstate or foreign commerce.

(b) *Definitions.* As used in this part:

(1) *Household Goods.* The term ''household goods'' means personal effects and property used or to be used in a dwelling when a part of the equipment or supply of such dwelling and such other similar property as the Commission may provide by regulation; except that this definition shall not be construed to include property moving from a factory or store except such property as a householder has purchased with intent to use in his dwelling and which is transported at the request of, and the transportation charges paid to the carrier by the householder. The regulations under this part do not apply to the transportation of property transportable under 49 U.S.C. 10102(10) (B) and (C).

(2) *Reasonable dispatch.* The term ''reasonable dispatch'' means the performance of transportation, excluding transportation provided under tariff provisions requiring guaranteed service dates, on the dates or during the period of time agreed upon by the carrier and the shipper and shown on the Order For Service/Bill of Lading, *Provided,* That the defenses of force majeure as construed by the courts shall not be denied the carrier.

(3) *Advertisement.* The term ''advertisement'' means any communication to the public in connection with an offer or sale of any interstate or foreign transportation service, but shall not be construed to include a listing of a carrier name, address, and telephone number in a telephone directory or similar publication.

(4) *Certified Scales.* As used in this part, a certified scale is any scale designed for weighing motor vehicles, including trailers or semi-trailers not attached to a tractor, and certified by an authorized scale inspection and licensing authority. A certified scale may also be a platform or warehouse type scale properly inspected and certified.

(5) *Individual Shipper.* As used in this part, ''individual shipper'' refers to any person who is the consignor or consignee of a household goods shipment and is identified as such in the bill of lading contract and owns the goods being transported.

(6) *Commercial Shipper.* As used in this part, ''commercial shipper'' refers to (a) any person, excluding the federal government, who is named as the consignor and/or consignee in a bill of lading contract who is not the owner of

the goods being transported but who assumes the responsibility for payment of the transportation and other tariff charges for the account of the beneficial owner of the goods, normally an employee of the consignor and/or consignee; or, (b) a freight forwarder which tenders a shipment to a carrier in furtherance of authorized or exempt freight forwarder operations.

(7) *Government Bill of Lading Shipper.* As used in this part, ''government bill of lading shipper'' refers to any person whose property is transported under the terms and conditions of a government bill of lading issued by any department or agency of the federal government to the carrier responsible for the transportation of the shipment.

(8) *Other terms.* Where any other terms used in the regulations in this part are defined in 49 U.S.C. 10102, such definitions shall be controlling. Where terms are used in this part which are neither defined herein nor in 49 U.S.C. 10102, they shall have the ordinary practical meaning of such terms.

[46 FR 16218, Mar. 11, 1981; 46 FR 22594, Apr. 20, 1981]

§ 375.2 Information for shippers.

(a) Prior to the execution of an order for service of a shipment of household goods, as defined in § 375.1(b)(1), every motor common carrier holding out to perform the service shall cause to be furnished to the prospective individual shipper the following publications.

(1) Publication OCE–100, *Your Rights and Responsibilities When You Move.*

(2) A concise, easy-to-read, accurate summary of any dispute settlement program in which the carrier participates, as provided in 49 U.S.C. 14708 and approved by the Commission.

(3) A copy of Form OCE–101, *Annual Performance Report,* most recently filed with the Commission, as prescribed in § 375.18, if the carrier is required to complete part B of that form.

(4) A written description of the customer complaint and inquiry handling procedures established and maintained by the carrier. Included in this description shall be a telephone number which the shipper may use to communicate with the carrier, accompanied by a clear and concise statement concerning who shall pay for such calls.

(b) *General Requirements:* (1) The text and format of the publication shall not be changed without the written approval of the Director, Office of Compliance and Enforcement, Interstate Commerce Commission.

(2) The Director, Office of Compliance and Enforcement, Interstate Commerce Commission, shall, within 30 days following the effective date of a decision of the Interstate Commerce Commission changing any rule or regulation published at 49 CFR part 375, cause to be published in the FEDERAL REGISTER a notice of amendment to Publication OCE–100 reflecting such change or changes.

(3) The dimensions of the publication shall be optional, *Provided, however,* The product of multiplying the length by the width shall be not less than 36 square inches.

(4) The color and design of the front and back cover of the publication shall be optional. *Provided,* the only words printed or appearing on the front cover shall be ''*Your Rights and Responsibilities When You Move.*''

[46 FR 16218, Mar. 11, 1981; 46 FR 22594, Apr. 20, 1981, as amended at 59 FR 2305, Jan. 14, 1994; 59 FR 34392, July 5, 1994; 62 FR 49940, 49941, Sept. 24, 1997]

§ 375.3 Estimates of charges.

(a) *Binding estimates.* Motor common carriers engaged in the transportation of household goods as defined in § 375.1(b)(1) may provide in their tariffs for the preparation and furnishing to shippers of binding estimates of the costs which the shippers will be required to pay for the services included in the estimates. Binding estimates must be furnished in writing to the shipper or other person responsible for payment of the freight charges and a copy of each such estimate must be retained by the carrier as an addendum to the bill of lading. All such estimates shall have clearly indicated on its face that the estimate is binding on the carrier and that the charges shown are the charges which will be assessed for the services identified in the estimate. Binding estimates must clearly describe the shipment and all services to be provided.

(b) *Non-binding estimates.* Motor common carriers engaged in the transportation of household goods as defined in §375.1(b)(1) may provide estimates of the approximate costs which will be assessed for the transportation of such shipments. Non-binding estimates shall be reasonably accurate. Estimates of approximate costs shall not be binding on the carriers providing such estimates. The final charges on shipments moved on non-binding estimates shall be those appearing in the carriers' tariffs applicable to the transportation. Non-binding estimates must be furnished without charge and in writing to the shipper or other person responsible for payment of the freight charges and a copy of each such estimate must be retained by the carrier as an addendum to the bill of lading. All such estimates shall have clearly indicated on the face thereof that the estimate is not binding on the carrier and that the charges shown are the approximate charges which will be assessed for the services identified in the estimate. Non-binding estimates must clearly describe the shipment and all services to be provided.

(c) *Estimated charges required to be entered on the order for service and bill of lading.* Motor common carriers furnishing non-binding estimates shall enter the estimated charges on the order for service, if an order for service is required, and on the bill of lading.

(d) *Maximum charges required to be paid at time of delivery on collect on delivery shipments subject to non-binding estimates of approximate costs.* At time of delivery of a collect on delivery shipment, except when such shipment is delivered to a warehouse for storage at the request of the shipper, on which a non-binding estimate of the approximate costs has been furnished by the carrier under the provisions of paragraph (b), the shipper may request delivery of the shipment upon payment, in a form acceptable to the carrier, of an amount not exceeding 110 percent of the estimated charges. The carrier shall, upon request of the shipper, relinquish possession of the shipment upon payment of not more than 110 percent of the estimated charges and shall defer demand for the payment of the balance of any remaining charges for a period of 30 days following the date of delivery.

[46 FR 16218, Mar. 11, 1981. Redesignated at 61 FR 54707, Oct. 21, 1996; 62 FR 49941, Sept. 24, 1997]

§375.4 Final charges on shipments subject to minimum weight or volume provisions.

(a) Motor common carriers engaged in the transportation of household goods, as defined in §375.1(b)(1), providing service for individual shippers on rates based on the transportation of a minimum weight or volume, must indicate on the order for service the minimum weight or volume-based rates, and the the minimum charges applicable to the shipment.

(b) Failure to comply with the requirements of paragraph (a) shall require, and the governing tariff shall contain, a rule providing that the final charges relating to such a shipment be computed based on the actual weight or volume of the shipment.

[46 FR 16218, Mar. 11, 1981. Redesignated at 61 FR 54707, Oct. 21, 1996; 62 FR 49941, Sept. 24, 1997]

§375.5 Order for service.

(a) *Order for service required.* Every motor common carrier shall, prior to the receipt of a shipment of household goods as defined in §375.1(b)(1) to be moved for an individual shipper, prepare an order for service which contains the following mimunum information:

(1) Name and address and ICC docket number of carrier who is responsible for performing the service.

(2) Shipper's name, address and, if available, telephone number.

(3) Name, address and telephone number of the delivering carrier's office or agent located at or nearest to the destination of the shipment.

(4) A telephone number at which the shipper/consignee may contact the carrier or its designated agent.

(5) Agreed pickup date and agreed delivery date, or the agreed period or periods of time within which pickup, delivery, or the entire move, will be accomplished. If the shipment is to be transported on a guaranteed service basis, the guaranteed dates or periods of time for pickup, transportation and

delivery and any penalty or per diem requirements of the agreement shall be entered under this item.

(6) Complete description of any special or accessorial services ordered; and minimum weight or volume charges applicable to the shipment.

(7) Any identification or registration number assigned the shipment by the carrier.

(8) Amount of estimated non-binding charges; method of payment of total charges; and, maximum amount required to be paid at time of delivery to obtain possession of the shipment or, the amount of charges required to be paid based on a binding estimate and the terms of payment under that estimate.

(9) Whether the shipper requests notification of the charges prior to delivery and the telephone number or address at which such communications will be received.

(10) *Signatures required.* The order for service shall be signed by the shipper who is ordering the service, and by the carrier or its agent. A copy of the order for service shall be dated and furnished the shipper at the time it is executed.

(b) *Amendments to an order for service.* Prior to loading an order for service may be amended by agreement of both parties.

[46 FR 16219, Mar. 11, 1981; 46 FR 22594, Apr. 20, 1981, as amended at 62 FR 49941, Sept. 24, 1997]

§ 375.6 Receipt or bill of lading.

(a) *Issuance of a receipt or bill of lading.* Every motor common carrier engaged in the transportation of household goods as defined in § 375.1(b)(1) shall issue a receipt or bill of lading. The bill of lading shall contain the minimum information required by § 375.6(b) and the terms and conditions of the contract. The carrier shall furnish a complete copy of the bill of lading to the shipper prior to the commencement of the loading of a shipment.

(b) *Minimum information required on a receipt or bill of lading.* Whenever a receipt or bill of lading is issued in compliance with paragraph (a), the carrier shall cause to be included therein the following minimum information:

(1) The name and address of the motor carrier issuing the receipt or bill of lading.

(2) The names and addresses of any other motor carriers, when known, which will participate, through interline, in the transportation of the shipment.

(3) The name, address and telephone number of the office of the carrier that should be contacted in relation to the transportation of shipments.

(4) When the transportation is to be performed on a collect on delivery basis, the name, address and, if furnished, the telephone number of a person to whom notification provided for in § 375.9(b) shall be given.

(5) When the transportation is to be performed for an individual shipper, and except when the transportation is to be performed subject to tariff provisions providing for guaranteed service dates, the agreed date or period of time for pickup of the shipment and the agreed date or period of time for the delivery of the shipment. The agreed dates or periods of time for pickup and delivery entered on the receipt or bill of lading shall conform to the agreed dates or periods of time for pickup and delivery entered on the order for service or a proper amendment to the order for service.

(6) When the transportation is to be performed subject to tariff provisions providing for guaranteed pickup, transportation and delivery service, the dates for pickup and delivery and any penalty or per diem entitlements due the shipper under the agreement.

(7) The actual date of pickup.

(8) The company or carrier identification number of the vehicle on which the shipment is loaded.

(9) The terms and conditions for payment of the total charges including notice of any minimum charges.

(10) When the transportation is to be performed on a collect on delivery basis and if a pre-move estimate of the charges is provided to the shipper, the maximum amount required to be paid at the time of delivery to obtain delivery of the shipment.

(11) The required released rates valuation statement.

(12) Evidence of any insurance coverage sold to or procured for the shipper, including the amount of the premium for such insurance.

(c) *Copy of receipt or bill of lading to accompany shipment.* A copy of the receipt or bill of lading shall accompany a shipment at all times while in the possession of a carrier. When the shipment is loaded on a vehicle for transportation the receipt or bill of lading shall be in possession of the driver responsible for the shipment.

[46 FR 16219, Mar. 11, 1981; 46 FR 22594, Apr. 20, 1981, as amended at 50 FR 37534, Sept. 16, 1985; 62 FR 49941, Sept. 24, 1997]

§375.7 Determination of weights.

(a) Every motor common carrier transporting household goods on a nonbinding estimate shall determine the weight of each shipment transported prior to the assessment of any charges dependent on the shipment weight. Except as otherwise provided herein the weight shall be obtained on a scale meeting the definition of a certified scale as provided in §375.1(b)(4).

(1) *Weighing procedure.* Except as otherwise provided herein the weight of each shipment shall be obtained by determining the difference between the tare weight of the vehicle on which the shipment is to be loaded prior to the loading and the gross weight of the same vehicle after the shipment is loaded; or, the gross weight of the vehicle with the shipment loaded and the tare weight of the same vehicle after the shipment is unloaded.

(2) At the time of both weighings the vehicle shall have installed or loaded all pads, dollies, handtrucks, ramps and other equipment required in the transportation of such shipments. Neither the driver nor any other persons shall be on the vehicle at the time of either weighing.

(3) The fuel tanks on the vehicle shall be full at the time of each weighing or, in the alternative, no fuel may be added between the two weighings when the tare weighing is the first weighing performed.

(4) The trailer of a tractor-trailer vehicle combination may be detached from the tractor and the trailer weighed separately at each weighing providing the length of the scale platform is adequate to accommodate and support the entire trailer at one time.

(5) Shipments weighing 1,000 pounds or less may be weighed on a certified platform or warehouse scale prior to loading for transportation or subsequent to unloading.

(6) The net weight of shipments transported in containers shall be the difference between the tare weight of the container, including all pads, blocking and bracing used or to be used in the transportation of the shipment and the gross weight of the container with the shipment loaded therein.

(7) The shipper or any other person responsible for the payment of the freight charges shall have the right to observe all weighings of the shipment. The carrier must advise the shipper or any other person entitled to observe the weighings of the time and specific location where each weighing will be performed and must give that person a reasonable opportunity to be present to observe the weighings. Waiver by a shipper of the right to observe any weighing or reweighing is permitted and does not affect any rights of the shipper under these regulations or otherwise.

(b) *Weight tickets.* The carrier shall obtain a separate weight ticket for each weighing required under this section except when both weighings are performed on the same scale, one weight ticket may be used to record both weighings. Every weight ticket must be signed by the person performing the weighing and must contain the following minimum information:

(1) The complete name and location of the scale.

(2) The date of each weighing.

(3) Identification of the weight entries thereon as being the tare, gross and/or net weights.

(4) The company or carrier identification of the vehicle.

(5) The last name of the shipper as it appears on the Bill of Lading.

(6) The carrier's shipment registration or Bill of Lading number.

(7) The original weight ticket or tickets relating to the determination of the weight of a shipment must be retained by the carrier as part of the file on the shipment. All freight bills presented to

collect any shipment charges dependent on the weight transported must be accompanied by true copies of all weight tickets obtained in the determination of the shipment weight.

(c) *Reweighing of shipments.* Before the actual commencement of the unloading of a shipment weighed at origin and after the shipper is informed of the billing weight and total charges, the shipper may request a reweigh. The charges shall be based on the reweigh weight.

[46 FR 16218, Mar. 11, 1981. Redesignated at 61 FR 54707, Oct. 21, 1996; 62 FR 49941, Sept. 24, 1997]

§ 375.8 Reasonable dispatch.

(a) Unless accepted for transportation on the basis of guaranteed pickup and delivery dates:

(1) *Reasonable dispatch required.* Each motor common carrier accepting shipments of household goods as defined in § 375.1(b)(1) for transportation for the account of individual shippers shall cause such shipments to be transported with reasonable dispatch as defined in § 375.1(b)(2).

(2) *Notification of delay in providing service with reasonable dispatch.* Whenever a carrier is unable to perform either or both the pickup and delivery of a shipment on the dates or during the periods of time specified in the order for service, the carrier shall notify the shipper by telephone, telegram or in person, at the carrier's expense, of the delay. Such notification shall be given as soon as it becomes apparent to the carrier that it will be unable to provide the service in compliance with the terms of the order for service.

(3) *Carrier notification of delay.* At the time of notification of delay the carrier shall advise the shipper of the dates or periods of time that pickup and/or delivery can be made, which considers the needs of the shipper. If the notification of delay occurs prior to the pickup of the shipment, the amendment shall be in writing as required by § 375.5(b). If the notification of delay occurs subsequent to the pickup of the shipment, the carrier representative notifying the shipper of the delay shall prepare a written record of the date, time and manner of notification and the amended date or period of time for delivery by the carrier which record shall be retained by the carrier as part of its file on the shipment and a true copy thereof shall be furnished, by first class mail or in person, to the shipper.

(b) *Tendering for delivery.* Except upon the request or concurrence of the shipper, a shipment being transported for an individual shipper shall not be tendered for delivery prior to the agreed delivery date or period of time specified on the bill of lading: *Provided,* That whenever a carrier is able to tender such a shipment for final delivery more than 24 hours prior to such specified date or the first day of such specified period of time, and the shipper has not requested or concurred in such early delivery, the carrier may, at its option, place the shipment in storage for its own account and at its own expense in a warehouse located in proximity to the destination of the shipment. Whenever a carrier shall exercise such option it shall immediately notify the shipper of the name and address of the warehouse in which the shipment has been placed, and shall make and keep a record of such notification as a part of its record of shipment. The carrier's responsibility for the shipment under the terms and conditions of the bill of lading and its responsibility for the charges for redelivery, handling and storage thereof shall continue until final delivery: *Provided,* that the carrier's responsibility under the bill of lading shall not extend beyond the agreed delivery date or the first day of the period within which delivery was to have been accomplished as specified in the bill of lading.

[46 FR 16220, Mar. 11, 1981; 46 FR 22594, Apr. 20, 1981, as amended at 62 FR 49941, Sept. 24, 1997]

§ 375.9 Notification of charges.

(a) Whenever an individual shipper of a shipment being transported on a collect on delivery basis specifically requests notification of the actual weight or volume and charges on a shipment, and supplies the carrier with an address or telephone number at which the communication will be received, the carrier shall comply with such request upon determining the actual weight and charges. Such notification shall be

made by telephone, telegram, or in person.

(b) Whenever a shipper requests notification of the weight or volume and charges on a shipment as provided in paragraph (a), the notification must be received by the shipper, at least one full 24-hour day, excluding Saturdays, Sundays and legal holidays, prior to any tender of the shipment for delivery. The 24-hour notification requirement shall not apply on a shipment to be backweighed or on a shipment which, with the agreement of the shipper, is to be picked up and delivered within a time period encompassing two consecutive week days, or on a shipment on which the charges have been estimated and the maximum amount required to be paid at time of delivery is 110 percent of the estimated charges.

§375.10 Signed receipt for shipment-release prohibited.

A shipping document to be signed by the consignee at time of delivery shall not contain any language which purports to release or discharge the carrier or its agents from liability, but may contain a statement that the property has been received in apparent good condition except as noted on the shipping documents.

§375.11 Selling of insurance to shippers.

(a) When a shipment is released for transportation at a value not exceeding 60 cents per pound per article, and the shipper does not declare a valuation of $1.25 or more per pound and pay or agree to pay the carrier for assuming liability for the shipment equal to the declared value, any common carrier of household goods as defined in §375.1(b)(1), or any employee, agent, or representative thereof, may sell, or offer to sell or procure for any shipper, any kind of insurance, under any type of policy, covering loss or damage in excess of the specified carrier liability to a shipment or shipments of household goods to be transported in interstate or foreign commerce by such carrier; *Provided*, that the shipper is issued a policy or other appropriate evidence of the insurance purchased, and a copy thereof be furnished to the shipper at the time the insurance is sold or procured. Carrier issued policies shall be written in plain English and shall clearly specify the nature and extent of coverage. Failure to issue a policy or other appropriate evidence of insurance purchased shall subject the carrier to full liability for any claims to recover for loss or damage attributed to the carrier.

(b) Any carrier offering or selling or procuring insurance as provided in paragraph (a) of this section shall provide in its tariff for the provision of such service. The tariff shall also provide for the base transportation charge to include assumption by the carrier for full liability for the value of the shipment in the event a policy or other appropriate evidence of the insurance purchased by the shipper is not issued to the shipper at the time of purchase.

[46 FR 16218, Mar. 11, 1981. Redesignated at 61 FR 54707, Oct. 21, 1996, as amended at 62 FR 49941, Sept. 24, 1997]

§375.12 Liability of carriers.

(a) *Liability restricted*. Except as provided in §375.11(a), common carriers by motor vehicle of household goods as defined in §375.1(b)(1) shall not assume any liability in excess of that for which they are legally liable under their lawful bills of lading and published tariffs.

(b) *Limitations of liability*. A common carrier by motor vehicle of household goods shall be liable for loss of or damage to any articles caused by it while being transported or while being held for storage-in-transit, including incidental pickup or delivery, and including liability for loss or damage to any article or appliance resulting from the servicing of such article or appliance by a third person engaged by the carrier to perform such service, to the extent provided in the outstanding released rates order; except that the carrier may exempt its liability in the following instances:

(1) No liability need be assumed for perishable articles included in the shipment without the knowledge of the carrier; and a carrier accepting for shipment perishable articles may impose reasonable conditions necessary to insure the safe transportation of such commodities.

(2) When a shipment is released to a value greater than sixty cents (60¢) per

pound, per article, liability for loss or damage may be limited to $100 per pound, per article (based upon the actual article weight), for any article included in the shipment that exceeds $100 per pound, per article in value, unless the shipper specifically notifies the carrier in writing that an identified article or articles with a value greater than $100 per pound will be included in the shipment. In such case, the shipper will be entitled to full recovery up to the declared value of the article or articles, not to exceed the declared value of the entire shipment.

(c) *Storage-in-transit.* A common carrier by motor vehicle of household goods holding goods for storage-in-transit (S.I.T.) shall, no less than 10 days prior to the expiration of either the specified period of time during which the goods are to be held in such storage or the maximum period of time provided in the carrier's tariff for storage-in-transit, notify the shipper in writing (1) of the date of conversion to permanent storage, (2) of the existence of a nine-month period subsequent to the date of conversion to permanent storage during which shipper may file claims against the carrier for loss and/or damage which occurred to the goods in transit or during the S.I.T. period, and, (3) of the fact that on the date of conversion, the liability of the carrier shall terminate and the property shall be subject to the rules, regulations, and charges of the warehouseman. Notification shall be by certified mail, return receipt requested. A common carrier by motor vehicle of household goods holding goods for storage-in-transit for a period of time less than 10 days shall, no less than one day prior to the expiration of the specified time during which the goods are to be held in such storage, give notification to the shipper of the information specified in paragraph (d) (1), (2), and (3) and maintain a record thereof as part of its record of the shipment. Failure or refusal of a carrier to notify the shipper in accordance with the foregoing shall automatically effect a continuance of carrier liability pursuant to the applicable tariff provisions with respect to S.I.T., until the end of the day following the date upon which notice is given.

[46 FR 16218, Mar. 11, 1981, as amended at 55 FR 18729, May 9, 1990; 55 FR 30235, July 25, 1990; 62 FR 49941, Sept. 24, 1997]

§ 375.13 Complaint and inquiry handling.

(a) Motor common carriers engaged in the transportation of household goods as defined in § 375.1(a) shall establish and maintain a procedure for responding to complaints and inquiries from shippers for which such transportation is provided. The procedure shall include a means whereby shippers may communicate with the principal office of the carrier by telephone.

(b) The carrier shall retain and make part of the file relating to a shipment a written record of all complaints and inquiries received from a shipper by any means of communication.

[46 FR 16218, Mar. 11, 1981. Redesignated at 61 FR 54707, Oct. 21, 1996; 62 FR 49941, Sept. 24, 1997]

§ 375.14 Agency agreements.

(a) Household Goods Agents are defined as follows:

(1) Prime agents are defined as all agents who are permitted or required under the terms of any agreement or arrangement with a principal carrier to provide any transportation service for or on behalf of the principal carrier, including the selling of or arranging for any transportation service, and who perform such services on other than an emergency or temporary basis.

(2) Military agents are defined as all agents who are permitted or required under the terms of any agreement or arrangement with a principal carrier to provide origin and/or destination services only on shipments transported on Government bills of lading issued by the Department of Defense, and who perform such services on other than an emergency or temporary basis.

(3) Temporary agents are defined as all agents who are permitted or required under the terms of any agreement or arrangement with a principal carrier to provide origin and/or destination services on behalf of the principal carrier, excluding the selling of or arranging for any transportation

service, and who perform such services on an emergency or temporary basis.

(b) Agreements between principal carriers and their prime or military agents must be reduced to writing and signed by the principal and the retained agent, and copies of any such agreements must be in the files of the principal carrier for a period of not less than 24 months following the date of termination of each agreement.

[46 FR 16222, Mar. 11, 1981; 46 FR 22594, Apr. 20, 1981]

§375.15 Collection of freight charges on household goods shipments involving loss or destruction in transit.

(a) No motor common carrier of household goods in interstate or foreign commerce shall collect, or shall require a shipper thereof to pay, any published freight charges (including any charges for accessorial or terminal services) when that shipment is totally lost or destroyed in transit. The provisions of this subsection shall apply only to the transportation of household goods as defined in §375.1(b)(1) of these rules. Notwithstanding any other provisions of this subsection, a carrier shall collect, and the shipper shall be required to pay, any specific valuation charge that may be due. This subsection shall not be applicable to the extent that any such loss or destruction is due to the act or omission of the shipper.

(b) In the event that any portion, but less than all, of a shipment of household goods is lost or destroyed in transit, a motor common carrier of household goods in interstate or foreign commerce shall, at the time it disposes of claims for loss, damage, or injury to the articles in the shipment as provided in part 370 of this chapter, refund that portion of its published freight charges (including any charges for accessorial or terminal services) corresponding to that portion of the shipment which is lost or destroyed in transit. To calculate the charges applicable to the shipment as delivered, the carrier shall multiply the percentage corresponding to the portion of the shipment delivered by the total charges (including accessorial and terminal charges) applicable to the shipment tendered by the shipper. If the charges computed in the manner set forth above exceed the charges otherwise applicable to the shipment as delivered, the lesser of those charges shall apply. The provisions of this paragraph shall apply only to the transportation of household goods as defined in §375.1(b)(1) of these rules. Notwithstanding any other provisions of this paragraph, a carrier shall collect, and the shipper shall be required to pay, that proportion of any charges for accessorial or terminal services rendered which corresponds to the proportion of the shipment not lost or destroyed in transit and any specific valuation charge that may be due. The provisions of this paragraph shall not be applicable to the extent that any such loss or destruction is due to the act or omission of the shipper. Carriers shall determine, at their own expense, the proportion of the shipment not lost or destroyed in transit.

(c) The rights provided by this section are in addition to, and not in lieu of, any other rights which the shipper may have with respect to a shipment of household goods which is lost or destroyed, or partially lost or destroyed, in transit, whether or not that shipper has exercised the rights provided in paragraphs (a) and (b) of this section.

[46 FR 16218, Mar. 11, 1981, as amended at 54 FR 36981, Sept. 6, 1989; 62 FR 49941, Sept. 24, 1997]

§375.16 Collection of freight charges on shipments transported on more than one vehicle.

(a) Whenever a collect on delivery shipment of household goods, as defined in §375.1(b)(1), is transported on more than one vehicle the carrier delivering such split or divided shipment shall observe the requirements of paragraphs (a)(1), (2) or (3) of this section in the collection of the charges.

(1) At the option of the carrier, the collection of the charges attributable to the transportation of the portion of the shipment transported on each vehicle may be deferred until all portions of the shipment are delivered; or,

(2) Providing that the charges for the entire shipment have been determined, the carrier may collect at the time of delivery of any portion of the shipment

that percentage of the charges represented by the portion of the shipment tendered for delivery; or,

(3) In the event that the charges due the carrier for the transportation of the entire shipment cannot reasonably be determined at the time any portion of the shipment is tendered for delivery, the carrier shall determine and collect the charges for the portion of the shipment being delivered. The total charges assessed by the carrier for the transportation of the separate portions of the shipment shall not exceed the charges due for the entire shipment.

(b) In the event of the loss or destruction of any part of a shipment being transported on more than one vehicle, the collection of charges as provided in paragraph (a) of this section shall also be in conformity with the requirements of § 375.15.

[[46 FR 16218, Mar. 11, 1981. Redesignated at 61 FR 54707, Oct. 21, 1996; 62 FR 49941, Sept. 24, 1997]

§ 375.17 Advertising by motor common carriers of household goods.

(a) Every motor common carrier engaged in the transportation of household goods in interstate or foreign commerce, including any carriers providing any accessorial service incidental to or part of such interstate or foreign transportation, shall include, and shall require each of its agents to include, in every advertisement as defined in § 375.1(b)(3), the name or trade name of the motor carrier under whose operating authority the advertised service will originate, and the certificate or docket number assigned to such operating authority by the Interstate Commerce Commission.

(b) Such certificate or docket number shall be in the following form in every advertisement: ''I.C.C. No._____'' but shall not include any sub numbers which may have been assigned.

(c) No motor common carrier engaged in the transportation of household goods, as defined in § 375.1(b)(1), or any agent or other representative of such a carrier, shall publish or cause to be published or use any advertisement as defined in § 375.1(b)(3), which is false, misleading or deceptive.

[46 FR 16218, Mar. 11, 1981. Redesignated at 61 FR 54707, Oct. 21, 1996; 62 FR 49941, Sept. 24, 1997]

§ 375.18 Preparation and filing of annual performance report.

(a) Filing requirement. Each motor common carrier for household goods as defined in § 375.1(b) that delivers interstate shipments to individual C.O.D. shippers, during any calendar year *shall*, on or before March 31 of the following year, file with the Office of Compliance and Enforcement, Interstate Commerce Commission, Washington, DC 20423–0001, a report of the service performed during the report year. The report shall be submitted on Form OCE–101, and its accuracy must be verified by an official of the carrier. All carriers must complete part A of Form OCE–101, and those carriers transporting 100 or more shipments also must complete part B.

(b) Prescribed Annual Performance Report Form OCE–101.

INTERSTATE COMMERCE COMMISSION

OFFICE OF COMPLIANCE AND ENFORCEMENT

ANNUAL PERFORMANCE REPORT FOR YEAR ENDED DECEMBER 31, 19—

Carrier's Name _____
Carrier's Address _____
ICC Number _____

PART A

During the year, the total number of household goods shipments (1st proviso) delivered for each type of shipper was:

1. C.O.D. shipments delivered under your common carrier authority (excluding all Government, Freight Forwarder, and Interline shipments) ..... _____
2. All other 1st proviso shipments (including all Government, Freight Forwarder, and Interline shipments) ..... _____
3. Total of Lines 1 and 2 (NOTE: Total must agree with total 1st proviso shipments reported in your ICC Annual Report, Schedule 600, Line 7, Column d, if you are required to file that report) ..... _____

PART B

Complete part B only if the C.O.D. delivered shipments reported in part A, Line 1, equals or exceeds 100 shipments. The questions and answers below deal only with the shipments reported in part A, Line 1.

4. Number of C.O.D. shipments where the order for service was based upon a *written binding estimate* (included are so-called hybrid estimates such as Guaranteed Price and Price Protection) ..... _____
5. Number of C.O.D. shipments where the charges were based on a *written non-binding estimate* _____
6. Number of C.O.D. shipments where the charges were based on *other than* a written binding or non-binding estimate ..... _____
7. Total of Lines 4, 5, and 6 (NOTE: Total should equal the shipment count reported in part A, Line 1) ..... _____
8. Percentage of shipments delivered where the final charges *exceeded* the initial written binding estimate ..... _____
9. Percentage of shipments delivered where the final charges *exceeded* the initial written non-binding estimate by 10% or more ..... _____
10. Percentage of shipments that were picked up *after* the last date for pickup listed on the order for service or bill of lading ..... _____
11. Percentage of shipments that were delivered *after* the last date of delivery specified on the order for service or bill of lading ..... _____
12. Percentage of shipments delivered where *there was* a claim filed (in excess of $200) for property damage or loss ..... _____
13. Percentage of shipments delivered where *there was* a claim filed (in excess of $200) for damages resulting from late pickup or delivery ..... _____
14. *Average* number of days required to settle a claim (in excess of $200) ..... _____
15. Percentage of claims (in excess of $200) that were resolved through the use of an arbitration program ..... _____
16. Percentage of claims (in excess of $200) that were resolved after the carrier received a legal notice of a lawsuit filed by the shipper ..... _____

CARRIER'S OATH (MUST BE COMPLETED BY A CARRIER OFFICIAL)

I, *(name and title of company official),* verify under penalty of perjury, under the laws of the United States of America, that all information supplied on this form or relative to the data contained in the form is, to the best of my knowledge and belief, true, correct and complete, based on all the information required to be included therein, of which I have any knowledge, and these representations are made in good faith. Further, I certify that I am qualified and authorized to certify the accuracy of the data. I know that willful misstatements or omission of material facts constitutes Federal crime violations punishable under 18 U.S.C. 1001 by imprisonment up to 5 years and fines up to $10,000 for each offense.

_____

Signature

_____

Title

_____

Date

(c) Instructions for Preparation of Annual Performance Report, Form OCE–101.

INSTRUCTIONS FOR PREPARATION

General Instructions

1. Data for completion of Form OCE–101 may be obtained by random sampling providing that in every instance, the universe sampled is all shipments delivered under your common carrier authority (excluding Government, Freight forwarder, and Interline traffic) during the report year or all claims arising out of the transportation of those shipments that were received or settled, as appropriate, during the report year.

2. When random sampling is used, the minimum sample size in every instance shall be 400 shipments or claims, as appropriate, in replicates of 100 shipments or claims each. All samples must conform to standard deviation with a 95% confidence level.

3. Carriers submitting Form OCE–101 shall retain and make available for review by an authorized Commission employee all working papers, notes, and other files relating to the preparation of each report for a period of not less than 24 months following the date of filing such a report.

4. The data in Form OCE–101 must be verified by a sworn statement signed by an official of the company.

SPECIFIC INSTRUCTIONS

Part A

Line 1: Only report those 1st proviso C.O.D. shipments moved under your common carrier authority after excluding all Government, Freight forwarder and Interline traffic.

Line 2: Report all other 1st proviso shipments, including those moving under contract carriage provisions and all Government, Freight forwarder and Interline traffic.

Line 3: Sum lines 1 and 2. The total should agree with total 1st proviso shipments reported in your ICC Annual Report, Schedule 600, Line 7, Column d, if you are required to file that report.

Part B

It is not necessary to complete Part B if the total of C.O.D. shipments reported on Part A, Line 1, did not equal or exceed 100 shipments. If completion of Part B is not required, sign the Certification and return the form to the Interstate Commerce Commission.

Line 4: Report only those C.O.D. shipments where the order for service was signed after the receipt of a written binding estimate. Include in this computation all so-called hybrid estimates (*e.g.*, Guaranteed Price and Price Protection options).

Line 5: Report the total number of C.O.D. shipments where the order for service was signed after the receipt of a written non-binding estimate. In the case of non-binding estimates, the actual charges are determined after the shipment has been picked up and weighed.

Line 6: Report only those C.O.D. shipments where there was no requirement for the preparation of a binding or non-binding written estimate by the carrier. As with non-binding estimates, the charges here are determined after the shipment has been picked up and weighed.

Line 7: Sum of Lines 4, 5, and 6. The number of shipments reported on Line 7 should be the same as those reported in Part A, Line 1.

COMPUTATION OF PERCENTAGES OR AVERAGES

You must determine the number of shipments falling into each of the categories described in Lines 8 and 9, respectively, and divide these shipments by the number of shipments reported on Lines 4 and 5, respectively.

You must determine the number of shipments falling into each of the categories described in Lines 10 through 16 and divide these shipments by the number of shipments reported on Line 7. (Exception: Line 13 is an average, not a percentage.)

Line 8: Compute the percentage of those shipments delivered where the final charges exceeded the written estimate initially provided to the shipper because of changes agreed to by the carrier and shipper in commodities transported and services provided.

Line 9: Compute the percentage of those shipments delivered under a non-binding written estimate where the final charges exceeded the written estimate provided to the shipper by 10% or more. The 10% figure is used because every C.O.D. shipper is required to have available 110% of the estimate at the time of delivery.

Line 10: Compute the percentage of those shipments where the actual pickup date occurred after the last date for pickup promised on the order for service or bill of lading.

Line 11: Compute the percentage of those shipments where the actual delivery date occurred after the last date for delivery promised on the order for service or bill of lading.

Line 12: Compute the percentage of those shipments where there was a claim filed within 60 days of the actual date of delivery to the residence. Only count those claims where the dollar value of the amount claimed by the shipper exceeded $200 and resulted from property damaged or lost. This excludes claims for late pickups and deliveries which are reported on line 13.

Line 13: Compute the percentage of those shipments where there was a claim filed within 60 days of the actual date of delivery to the residence. Only count those claims where the dollar value of the amount claimed by the shipper exceeded $200 and resulted from a late pickup or delivery. Late pickups and deliveries are defined in Instructions 10 and 11.

Line 14: Enter the average number of days required to pay, decline, or make a firm compromise offer of settlement of all claims exceeding $200 during the report year. For the purpose of this report, a claim shall be considered to be a ''claim filed'' if it meets the criteria set forth in Lines 11 and 12, and shall be considered as paid, declined, or compromised on the date on which a written offer is mailed or delivered in person to a claimant.

Line 15: Compute the percentage of the claims exceeding $200 arising out of the transportation of shipments which were resolved during the report year through the use of a dispute resolution or arbitration procedure maintained or participated in by the carrier.

Line 16: Compute the percentage of the claims exceeding $200 arising out of the transportation of shipments which were resolved during the report year as a result of

legal notice of suit to recover being filed by the shipper.

[59 FR 2305, Jan. 14, 1994, as amended at 59 FR 34392, July 5, 1994; 62 FR 49941, Sept. 24, 1997]

§ 375.19 Use of charge card plans.

Motor common carriers of household goods, as defined in 49 CFR 375.1(b)(1), may provide in their tariffs for the acceptance of charge cards for the payment of freight charges whenever shipments are transported under agreements and tariffs requiring payment by cash, certified check or money order. Payment by charge card shall be considered the same as payment by cash, certified check or money order. Any tariff rule or item permitting the acceptance of charge cards shall identify the charge card plans participated in by the carrier.

[46 FR 16218, Mar. 11, 1981. Redesignated at 61 FR 54707, Oct. 21, 1996; 62 FR 49941, Sept. 24, 1997]

PART 376—LEASE AND INTERCHANGE OF VEHICLES

Subpart A—General Applicability and Definitions

Sec.
376.1 Applicability.
376.2 Definitions.

Subpart B—Leasing Regulations

376.11 General leasing requirements.
376.12 Written lease requirements.

Subpart C—Exemptions for the Leasing Regulations

376.21 General exemptions.
376.22 Exemption for private carrier leasing and leasing between authorized carriers.
376.26 Exemption for leases between authorized carriers and their agents.

Subpart D—Interchange Regulations

376.31 Interchange of equipment.

Subpart E—Private Carriers and Shippers

376.42 Lease of equipment by regulated carriers.

AUTHORITY: 49 U.S.C. 13301 and 14102; 49 CFR 1.48.

SOURCE: 44 FR 4681, Jan. 23, 1979, unless otherwise noted. Redesignated at 61 FR 54707, Oct. 21, 1996.

Subpart A—General Applicability and Definitions

§ 376.1 Applicability.

The regulations in this part apply to the following actions by motor carriers registered with the Secretary to transport property:

(a) The leasing of equipment with which to perform transportation regulated by the Secretary.

(b) The leasing of equipment to motor private carrier or shippers.

(c) The interchange of equipment between motor common carriers in the performance of transportation regulated by the Secretary.

[44 FR 4681, Jan. 23, 1979. Redesignated at 61 FR 54707, Oct. 21, 1996, as amended at 62 FR 15423, Apr. 1, 1997]

§ 376.2 Definitions.

(a) *Authorized carrier.* A person or persons authorized to engage in the transportation of property as a motor carrier under the provisions of 49 U.S.C. 13901 and 13902.

(b) *Equipment.* A motor vehicle, straight truck, tractor, semitrailer, full trailer, any combination of these and any other type of equipment used by authorized carriers in the transportation of property for hire.

(c) *Interchange.* The receipt of equipment by one motor common carrier of property from another such carrier, at a point which both carriers are authorized to serve, with which to continue a through movement.

(d) *Owner.* A person (1) to whom title to equipment has been issued, or (2) who, without title, has the right to exclusive use of equipment, or (3) who has lawful possession of equipment registered and licensed in any State in the name of that person.

(e) *Lease.* A contract or arrangement in which the owner grants the use of equipment, with or without driver, for a specified period to an authorized carrier for use in the regulated transportation of property, in exchange for compensation.

(f) *Lessor.* In a lease, the party granting the use of equipment, with or without driver, to another.

(g) *Lessee.* In a lease, the party acquiring the use of equipment with or without driver, from another.

(h) *Sublease.* A written contract in which the lessee grants the use of leased equipment, with or without driver, to another.

(i) *Addendum.* A supplement to an existing lease which is not effective until signed by the lessor and lessee.

(j) *Private carrier.* A person, other than a motor carrier, transporting property by motor vehicle in interstate or foreign commerce when (1) the person is the owner, lessee, or bailee of the property being transported; and (2) the property is being transported for sale, lease, rent, or bailment, or to further a commercial enterprise.

(k) *Shipper.* A person who sends or receives property which is transported in interstate or foreign commerce.

(l) *Escrow fund.* Money deposited by the lessor with either a third party or the lessee to guarantee performance, to repay advances, to cover repair expenses, to handle claims, to handle license and State permit costs, and for any other purposes mutually agreed upon by the lessor and lessee.

(m) *Detention.* The holding by a consignor or consignee of a trailer, with or without power unit and driver, beyond the free time allocated for the shipment, under circumstances not attributable to the performance of the carrier.

[44 FR 4681, Jan. 23, 1979, as amended at 49 FR 47850, Dec. 7, 1984; 62 FR 15424, Apr. 1, 1997]

Subpart B—Leasing Regulations

§ 376.11 General leasing requirements.

Other than through the interchange of equipment as set forth in § 376.31, and under the exemptions set forth in subpart C of these regulations, the authorized carrier may perform authorized transportation in equipment it does not own only under the following conditions:

(a) *Lease.* There shall be a written lease granting the use of the equipment and meeting the requirements contained in § 376.12.

(b) *Receipts for equipment.* Receipts, specifically identifying the equipment to be leased and stating the date and time of day possession is transferred, shall be given as follows:

(1) When possession of the equipment is taken by the authorized carrier, it shall give the owner of the equipment a receipt. The receipt identified in this section may be transmitted by mail, telegraph, or other similar means of communication.

(2) When possession of the equipment by the authorized carrier ends, a receipt shall be given in accordance with the terms of the lease agreement if the lease agreement requires a receipt.

(3) Authorized representatives of the carrier and the owner may take possession of leased equipment and give and receive the receipts required under this subsection.

(c) *Identification of equipment.* The authorized carrier acquiring the use of equipment under this section shall identify the equipment as being in its service as follows:

(1) During the period of the lease, the carrier shall identify the equipment in accordance with the FHWA's requirements in 49 CFR part 390 of this chapter (Identification of Vehicles).

(2) Unless a copy of the lease is carried on the equipment, the authorized carrier shall keep a statement with the equipment during the period of the lease certifying that the equipment is being operated by it. The statement shall also specify the name of the owner, the date and length of the lease, any restrictions in the lease relative to the commodities to be transported, and the address at which the original lease is kept by the authorized carrier. This statement shall be prepared by the authorized carrier or its authorized representative.

(d) *Records of equipment.* The authorized carrier using equipment leased under this section shall keep records of the equipment as follows:

(1) The authorized carrier shall prepare and keep documents covering each trip for which the equipment is used in its service. These documents shall contain the name and address of the owner of the equipment, the point of origin, the time and date of departure, and the

point of final destination. Also, the authorized carrier shall carry papers with the leased equipment during its operation containing this information and identifying the lading and clearly indicating that the transportation is under its responsibility. These papers shall be preserved by the authorized carrier as part of its transportation records. Leases which contain the information required by the provisions in this paragraph may be used and retained instead of such documents or papers. As to lease agreements negotiated under a master lease, this provision is complied with by having a copy of a master lease in the unit of equipment in question and where the balance of documentation called for by this paragraph is included in the freight documents prepared for the specific movement.

(2) [Reserved]

[44 FR 4681, Jan. 23, 1979, as amended at 49 FR 47269, Dec. 3, 1984; 49 FR 47850, Dec. 7, 1984; 50 FR 24649, June 12, 1985; 51 FR 37406, Oct. 22, 1986; 62 FR 15424, Apr. 1, 1997]

§ 376.12 Written lease requirements.

Except as provided in the exemptions set forth in subpart C of this part, the written lease required under § 376.11(a) shall contain the following provisions. The required lease provisions shall be adhered to and performed by the authorized carrier.

(a) *Parties.* The lease shall be made between the authorized carrier and the owner of the equipment. The lease shall be signed by these parties or by their authorized representatives.

(b) *Duration to be specific.* The lease shall specify the time and date or the circumstances on which the lease begins and ends. These times or circumstances shall coincide with the times for the giving of receipts required by § 376.11(b).

(c) *Exclusive possession and responsibilities.* (1) The lease shall provide that the authorized carrier lessee shall have exclusive possession, control, and use of the equipment for the duration of the lease. The lease shall further provide that the authorized carrier lessee shall assume complete responsibility for the operation of the equipment for the duration of the lease.

(2) Provision may be made in the lease for considering the authorized carrier lessee as the owner of the equipment for the purpose of subleasing it under these regulations to other authorized carriers during the lease.

(3) When an authorized carrier of household goods leases equipment for the transportation of household goods, as defined by the Secretary, the parties may provide in the lease that the provisions required by paragraph (c)(1) of this section apply only during the time the equipment is operated by or for the authorized carrier lessee.

(4) Nothing in the provisions required by paragraph (c)(1) of this section is intended to affect whether the lessor or driver provided by the lessor is an independent contractor or an employee of the authorized carrier lessee. An independent contractor relationship may exist when a carrier lessee complies with 49 U.S.C. 14102 and attendant administrative requirements.

(d) *Compensation to be specified.* The amount to be paid by the authorized carrier for equipment and driver's services shall be clearly stated on the face of the lease or in an addendum which is attached to the lease. Such lease or addendum shall be delivered to the lessor prior to the commencement of any trip in the service of the authorized carrier. An authorized representative of the lessor may accept these documents. The amount to be paid may be expressed as a percentage of gross revenue, a flat rate per mile, a variable rate depending on the direction traveled or the type of commodity transported, or by any other method of compensation mutually agreed upon by the parties to the lease. The compensation stated on the lease or in the attached addendum may apply to equipment and driver's services either separately or as a combined amount.

(e) *Items specified in lease.* The lease shall clearly specify which party is responsible for removing identification devices from the equipment upon the termination of the lease and when and how these devices, other than those painted directly on the equipment, will be returned to the carrier. The lease shall clearly specify the manner in which a receipt will be given to the authorized carrier by the equipment

owner when the latter retakes possession of the equipment upon termination of the lease agreement, if a receipt is required at all by the lease. The lease shall clearly specify the responsibility of each party with respect to the cost of fuel, fuel taxes, empty mileage, permits of all types, tolls, ferries, detention and accessorial services, base plates and licenses, and any unused portions of such items. The lease shall clearly specify who is responsible for loading and unloading the property onto and from the motor vehicle, and the compensation, if any, to be paid for this service. Except when the violation results from the acts or omissions of the lessor, the authorized carrier lessee shall assume the risks and costs of fines for overweight and oversize trailers when the trailers are pre-loaded, sealed, or the load is containerized, or when the trailer or lading is otherwise outside of the lessor's control, and for improperly permitted overdimension and overweight loads and shall reimburse the lessor for any fines paid by the lessor. If the authorized carrier is authorized to receive a refund or a credit for base plates purchased by the lessor from, and issued in the name of, the authorized carrier, or if the base plates are authorized to be sold by the authorized carrier to another lessor the authorized carrier shall refund to the initial lessor on whose behalf the base plate was first obtained a prorated share of the amount received.

(f) *Payment period.* The lease shall specify that payment to the lessor shall be made within 15 days after submission of the necessary delivery documents and other paperwork concerning a trip in the service of the authorized carrier. The paperwork required before the lessor can receive payment is limited to log books required by the Department of Transportation and those documents necessary for the authorized carrier to secure payment from the shipper. In addition, the lease may provide that, upon termination of the lease agreement, as a condition precedent to payment, the lessor shall remove all identification devices of the authorized carrier and, except in the case of identification painted directly on equipment, return them to the carrier. If the identification device has been lost or stolen, a letter certifying its removal will satisfy this requirement. Until this requirement is complied with, the carrier may withhold final payment. The authorized carrier may require the submission of additional documents by the lessor but not as a prerequisite to payment. Payment to the lessor shall not be made contingent upon submission of a bill of lading to which no exceptions have been taken. The authorized carrier shall not set time limits for the submission by the lessor of required delivery documents and other paperwork.

(g) *Copies of freight bill or other form of freight documentation.* When a lessor's revenue is based on a percentage of the gross revenue for a shipment, the lease must specify that the authorized carrier will give the lessor, before or at the time of settlement, a copy of the rated freight bill or a computer-generated document containing the same information, or, in the case of contract carriers, any other form of documentation actually used for a shipment containing the same information that would appear on a rated freight bill. When a computer-generated document is provided, the lease will permit lessor to view, during normal business hours, a copy of any actual document underlying the computer-generated document. Regardless of the method of compensation, the lease must permit lessor to examine copies of the carrier's tariff or, in the case of contract carriers, other documents from which rates and charges are computed, provided that where rates and charges are computed from a contract of a contract carrier, only those portions of the contract containing the same information that would appear on a rated freight bill need be disclosed. The authorized carrier may delete the names of shippers and consignees shown on the freight bill or other form of documentation.

(h) *Charge-back items.* The lease shall clearly specify all items that may be initially paid for by the authorized carrier, but ultimately deducted from the lessor's compensation at the time of payment or settlement, together with a recitation as to how the amount of each item is to be computed. The lessor

shall be afforded copies of those documents which are necessary to determine the validity of the charge.

(i) *Products, equipment, or services from authorized carrier.* The lease shall specify that the lessor is not required to purchase or rent any products, equipment, or services from the authorized carrier as a condition of entering into the lease arrangement. The lease shall specify the terms of any agreement in which the lessor is a party to an equipment purchase or rental contract which gives the authorized carrier the right to make deductions from the lessor's compensation for purchase or rental payments.

(j) *Insurance.* (1) The lease shall clearly specify the legal obligation of the authorized carrier to maintain insurance coverage for the protection of the public pursuant to FHWA regulations under 49 U.S.C. 13906. The lease shall further specify who is responsible for providing any other insurance coverage for the operation of the leased equipment, such as bobtail insurance. If the authorized carrier will make a charge back to the lessor for any of this insurance, the lease shall specify the amount which will be charged-back to the lessor.

(2) If the lessor purchases any insurance coverage for the operation of the leased equipment from or through the authorized carrier, the lease shall specify that the authorized carrier will provide the lessor with a copy of each policy upon the request of the lessor. Also, where the lessor purchases such insurance in this manner, the lease shall specify that the authorized carrier will provide the lessor with a certificate of insurance for each such policy. Each certificate of insurance shall include the name of the insurer, the policy number, the effective dates of the policy, the amounts and types of coverage, the cost to the lessor for each type of coverage, and the deductible amount for each type of coverage for which the lessor may be liable.

(3) The lease shall clearly specify the conditions under which deductions for cargo or property damage may be made from the lessor's settlements. The lease shall further specify that the authorized carrier must provide the lessor with a written explanation and itemization of any deductions for cargo or property damage made from any compensation of money owed to the lessor. The written explanation and itemization must be delivered to the lessor before any deductions are made.

(k) *Escrow funds.* If escrow funds are required, the lease shall specify:

(1) The amount of any escrow fund or performance bond required to be paid by the lessor to the authorized carrier or to a third party.

(2) The specific items to which the escrow fund can be applied.

(3) That while the escrow fund is under the control of the authorized carrier, the authorized carrier shall provide an accounting to the lessor of any transactions involving such fund. The carrier shall perform this accounting in one of the following ways:

(i) By clearly indicating in individual settlement sheets the amount and description of any deduction or addition made to the escrow fund; or

(ii) By providing a separate accounting to the lessor of any transactions involving the escrow fund. This separate accounting shall be done on a monthly basis.

(4) The right of the lessor to demand to have an accounting for transactions involving the escrow fund at any time.

(5) That while the escrow fund is under the control of the carrier, the carrier shall pay interest on the escrow fund on at least a quarterly basis. For purposes of calculating the balance of the escrow fund on which interest must be paid, the carrier may deduct a sum equal to the average advance made to the individual lessor during the period of time for which interest is paid. The interest rate shall be established on the date the interest period begins and shall be at least equal to the average yield or equivalent coupon issue yield on 91-day, 13-week Treasury bills as established in the weekly auction by the Department of Treasury.

(6) The conditions the lessor must fulfill in order to have the escrow fund returned. At the time of the return of the escrow fund, the authorized carrier may deduct monies for those obligations incurred by the lessor which have been previously specified in the lease, and shall provide a final accounting to the lessor of all such final deductions

made to the escrow fund. The lease shall further specify that in no event shall the escrow fund be returned later than 45 days from the date of termination.

(l) *Copies of the lease.* An original and two copies of each lease shall be signed by the parties. The authorized carrier shall keep the original and shall place a copy of the lease on the equipment during the period of the lease unless a statement as provided for in § 376.11(c)(2) is carried on the equipment instead. The owner of the equipment shall keep the other copy of the lease.

(m) This paragraph applies to owners who are not agents but whose equipment is used by an agent of an authorized carrier in providing transportation on behalf of that authorized carrier. In this situation, the authorized carrier is obligated to ensure that these owners receive all the rights and benefits due an owner under the leasing regulations, especially those set forth in paragraphs (d)–(k) of this section. This is true regardless of whether the lease for the equipment is directly between the authorized carrier and its agent rather than directly between the authorized carrier and each of these owners. The lease between an authorized carrier and its agent shall specify this obligation.

[44 FR 4681, Jan. 23, 1979, as amended at 45 FR 13092, Feb. 28, 1980; 47 FR 28398, June 30, 1982; 47 FR 51140, Nov. 12, 1982; 47 FR 54083, Dec. 1, 1982; 49 FR 47851, Dec. 7, 1984; 51 FR 37406, 37407, Oct. 22, 1986; 52 FR 2412, Jan. 22, 1987; 57 FR 32905, July 24, 1992; 62 FR 15424, Apr. 1, 1997]

Subpart C—Exemptions for the Leasing Regulations

§ 376.21 General exemptions.

Except for § 376.11(c) which requires the identification of equipment, the leasing regulations in this part shall not apply to:

(a) Equipment used in substituted motor-for-rail transportation of railroad freight moving between points that are railroad stations and on railroad billing.

(b) Equipment used in transportation performed exclusively within any commercial zone as defined by the Secretary.

(c) Equipment leased without drivers from a person who is principally engaged in such a business.

(d) Any type of trailer not drawn by a power unit leased from the same lessor.

[44 FR 4681, Jan. 23, 1979. Redesignated at 61 FR 54707, Oct. 21, 1996, as amended at 62 FR 15424, Apr. 1, 1997]

§ 376.22 Exemption for private carrier leasing and leasing between authorized carriers.

Regardless of the leasing regulations set forth in this part, an authorized carrier may lease equipment to or from another authorized carrier, or a private carrier may lease equipment to an authorized carrier under the following conditions:

(a) The identification of equipment requirements in § 376.11(c) must be complied with;

(b) The lessor must own the equipment or hold it under a lease;

(c) There must be a written agreement between the authorized carriers or between the private carrier and authorized carrier, as the case may be, concerning the equipment as follows:

(1) It must be signed by the parties or their authorized representatives.

(2) It must provide that control and responsibility for the operation of the equipment shall be that of the lessee from the time possession is taken by the lessee and the receipt required under § 376.11(b) is given to the lessor until: (i) Possession of the equipment is returned to the lessor and the receipt required under § 376.11(b) is received by the authorized carrier; or (ii) in the event that the agreement is between authorized carriers, possession of the equipment is returned to the lessor or given to another authorized carrier in an interchange of equipment.

(3) A copy of the agreement must be carried in the equipment while it is in the possession of the lessee.

(4) Nothing in this section shall prohibit the use, by authorized carriers, private carriers, and all other entities conducting lease operations pursuant to this section, of a master lease if a copy of that master lease is carried in the equipment while it is in the possession of the lessee, and if the master lease complies with the provisions of

this section and receipts are exchanged in accordance with § 376.11(b), and if records of the equipment are prepared and maintained in accordance with § 376.11(d).

[49 FR 9570, Mar. 14, 1984, as amended at 49 FR 47269, Dec. 3, 1984; 49 FR 47851, Dec. 7, 1984; 62 FR 15424, Apr. 1, 1997]

§ 376.26 Exemption for leases between authorized carriers and their agents.

The leasing regulations set forth in § 376.12(e) through (l) do not apply to leases between authorized carriers and their agents.

[47 FR 28398, June 30, 1982, as amended at 62 FR 15424, Apr. 1, 1997]

Subpart D—Interchange Regulations

§ 376.31 Interchange of equipment.

Authorized common carriers may interchange equipment under the following conditions:

(a) *Interchange agreement*. There shall be a written contract, lease, or other arrangement providing for the interchange and specifically describing the equipment to be interchanged. This written agreement shall set forth the specific points of interchange, how the equipment is to be used, and the compensation for such use. The interchange agreement shall be signed by the parties or by their authorized representatives.

(b) *Operating authority*. The carriers participating in the interchange shall be registered with the Secretary to provide the transportaiton of the commodities at the point where the physical exchange occurs.

(c) *Through bills of lading*. The traffic transported in interchange service must move on through bills of lading issued by the originating carrier. The rates charged and the revenues collected must be accounted for in the same manner as if there had been no interchange. Charges for the use of the interchanged equipment shall be kept separate from divisions of the joint rates or the proportions of such rates accruing to the carriers by the application of local or proportional rates.

(d) *Identification of equipment*. The authorized common carrier receiving the equipment shall identify equipment operated by it in interchange service as follows:

(1) The authorized common carrier shall identify power units in accordance with the FHWA's requirements in 49 CFR part 390 of this chapter (Identification of Vehicles). Before giving up possession of the equipment, the carrier shall remove all identification showing it as the operating carrier.

(2) Unless a copy of the interchange agreement is carried on the equipment, the authorized common carrier shall carry a statement with each vehicle during interchange service certifying that it is operating the equipment. The statement shall also identify the equipment by company or State registration number and shall show the specific point of interchange, the date and time it assumes responsibility for the equipment, and the use to be made of the equipment. This statement shall be signed by the parties to the interchange agreement or their authorized representatives. The requirements of this paragraph shall not apply where the equipment to be operated in interchange service consists only of trailers or semitrailers.

(e) *Connecting carriers considered as owner*—An authorized carrier receiving equipment in connection with a through movement shall be considered to the owner of the equipment for the purpose of leasing the equipment to other authorized carriers in furtherance of the movement to destination or the return of the equipment after the movement is completed.

[44 FR 4681, Jan. 23, 1979. Redesignated at 61 FR 54707, Oct. 21, 1996, as amended at 62 FR 15424, Apr. 1, 1997]

Subpart E—Private Carriers and Shippers

§ 376.42 Lease of equipment by regulated carriers.

Authorized carriers may lease equipment and drivers from private carriers,

for periods of less than 30 days, in the manner set forth in §376.22.

[49 FR 9570, Mar. 14, 1984, as amended at 51 FR 37034, Oct. 17, 1986; 62 FR 15424, Apr. 1, 1997]

PART 377—PAYMENT OF TRANSPORTATION CHARGES

Subpart A—Handling of C.O.D. Shipments

Sec.
377.101 Applicability.
377.103 Tariff requirements.
377.105 Collection and remittance.

Subpart B—Extension of Credit to Shippers by Motor Common Carriers, Water Common Carriers, and Household Goods Freight Forwarders

377.201 Scope.
377.203 Extension of credit to shippers.
377.205 Presentation of freight bills.
377.207 Effect of mailing freight bills or payments.
377.209 Additional charges.
377.211 Computation of time.
377.213 [Reserved]
377.215 Household goods shipments by motor common carriers.
377.217 Interline settlement of revenues.

AUTHORITY: 49 U.S.C. 13101, 13301, 13701–13702, 13706, 13707, and 14101; 49 CFR 1.48.

Subpart A—Handling of C.O.D. Shipments

AUTHORITY: 49 U.S.C. 10101, 10321, 10922, 10762, and 11101, and 5 U.S.C. 553.

SOURCE: 32 FR 20050, Dec. 20, 1967, unless otherwise noted. Redesignated at 61 FR 54708, Oct. 21, 1996.

§377.101 Applicability.

The rules and regulations in this part apply to the transportation by motor vehicle of c.o.d. shipments by all common carriers of property subject to 49 U.S.C. 13702, except such transportation which is auxiliary to or supplemental of transportation by railroad and performed on railroad bills of lading, and except such transportation which is performed for freight forwarders and on freight forwarder bills of lading.

[32 FR 20050, Dec. 20, 1967. Redesignated at 61 FR 54708, Oct. 21, 1996, as amended at 62 FR 15424, Apr. 1, 1997]

§377.103 Tariff requirements.

No common carrier of property subject to the provisions of 49 U.S.C. 13702, except as otherwise provided in §377.101, shall render any c.o.d. service unless such carrier has published, posted and filed tariffs which contain the rates, charges and rules governing such service, which rules shall conform to the regulations in this part.

[32 FR 20050, Dec. 20, 1967. Redesignated at 61 FR 54708, Oct. 21, 1996, as amended at 62 FR 15424, Apr. 1, 1997]

§377.105 Collection and remittance.

Every common carrier of property subject to 49 U.S.C. 13702, except as otherwise provided in §377.101, which chooses to provide c.o.d. service may publish and maintain, or cause to be published and maintained for its account, a tariff or tariffs which set forth nondiscriminatory rules governing c.o.d. service and the collection and remittance of c.o.d. funds. Alternatively, any carrier that provides c.o.d. service, but does not wish to publish and maintain, or cause to be published and maintained, its own nondiscriminatory tariff, may adopt a rule requiring remittance of each c.o.d. collection directly to the consignor or other person designated by the consignor as payee within fifteen (15) days after delivery of the c.o.d. shipment to the consignee.

[52 FR 45966, Dec. 3, 1987, as amended at 62 FR 15424, Apr. 1, 1997]

Subpart B—Extension of Credit to Shippers by Motor Common Carriers, Water Common Carriers, and Household Goods Freight Forwarders

AUTHORITY: 5 U.S.C. 553 and 49 U.S.C. 10321, 10701, 10702, 10741, 10743, and 10744.

SOURCE: 50 FR 2290, Jan 16, 1985, unless otherwise noted. Redesignated at 61 FR 54709, Oct. 21, 1996.

§ 377.201 Scope.

(a) *General.* These regulations apply to the extension of credit in the transportation of property under Federal Highway Administration regulation by motor carriers and household goods freight forwarders, except as otherwise provided.

(b) *Exceptions.* These regulations do not apply to—

(1) Contract carriage operations.

(2) Transportation for—

(i) The United States or any department, bureau, or agency thereof,

(ii) Any State, or political subdivision thereof,

(iii) The District of Columbia.

(3) Property transportation incidental to passenger operations.

[50 FR 2290, Jan. 16, 1985, as amended at 51 FR 44297, Dec. 9, 1986; 62 FR 15424, Apr. 1, 1997]

§ 377.203 Extension of credit to shippers.

(a) *Authorization to extend credit.* (1) A carrier that meets the requirements in paragraph (a)(2) of this section may—

(i) Relinquish possession of freight in advance of the payment of the tariff charges, and

(ii) Extend credit in the amount of such charges to those who undertake to pay them (such persons are called *shippers* in this part).

(2) For such authorization, the carrier shall take reasonable actions to assure payment of the tariff charges within the credit periods specified—

(i) In this part, or

(ii) In tariff provisions published pursuant to the regulations in paragraph (d) of this section.

(b) *When the credit period begins.* The credit period shall begin on the day following presentation of the freight bill.

(c) *Length of credit period.* Unless a different credit period has been established by tariff publication pursuant to paragraph (d) of this section, the credit period is 15 days. It includes Saturdays, Sundays, and legal holidays.

(d) *Carriers may establish different credit periods in tariff rules.* Carriers may publish tariff rules establishing credit periods different from those in paragraph (c) of this section. Such credit periods shall not be longer than 30 calendar days.

(e) *Service charges.* (1) Service charges shall not apply when credit is extended and payments are made within the standard credit period. The term *standard credit period,* as used in the preceding sentence, means—

(i) The credit period prescribed in paragraph (c) of this section, or

(ii) A substitute credit period published in a tariff rule pursuant to the authorization in paragraph (d) of this section.

(2) Carriers may, by tariff rule, extend credit for an additional time period, subject if they wish to a service charge for that additional time. The combined length of the carrier's standard credit period (as defined in paragraph (e)(1) of this section) and its additional credit period shall not exceed the 30-day maximum credit period prescribed in paragraph (d) of this section. When such a tariff rule is in effect, shippers may elect to postpone payment until the end of the extended credit period if, in consideration therefor, they include any published service charges when making their payment.

(3) Carriers may, by tariff rule, establish service charges for payments made after the expiration of an authorized credit period. Such a rule shall—

(i) Institute such charges on the day following the last day of an authorized credit period, and

(ii) Notify shippers—

(A) That its only purpose is to prevent a shipper who does not pay on time from having free use of funds due to the carrier,

(B) That it does not sanction payment delays, and

(C) That failure to pay within the authorized credit period will, despite this provision for such charges, continue to require the carrier, before again extending credit, to determine in good faith whether the shipper will comply with the credit regulations in the future.

(4) Tariff rules that establish charges pursuant to paragraph (e) (2) or (3) of this section may establish minimum charges.

(f) *Discounts.* Carriers may, by tariff rule, authorize discounts for early freight bill payments when credit is extended.

(g)(1) *Collection expense charges.* Carriers may, by tariff rule, assess reasonable and certain liquidated damages for all costs incurred in the collection of overdue freight charges. Carriers may use one of two methods in their tariffs:

(i) The first method is to assess liquidated damages as a separate additional charge to the unpaid freight bill. In doing so, the tariff rule shall disclose the exact amount of the charges by stating either a dollar or specified percentage amount (or a combination of both) of the unpaid freight bill. The tariff shall further specify the time period (which shall at least allow for the authorized credit period) within which the shipper must pay to avoid such liquidated damages.

(ii) The second method is to require payment of the full, nondiscounted rate instead of the discounted rate otherwise applicable. The difference between the discount and the full rate constitutes a carrier's liquidated damages for its collection effort. Under this method the tariff shall identify the discount rates that are subject to the condition precedent and which require the shipper to make payment by a date certain. The date certain may not be set to occur by the carrier until at least after the expiration of the carrier's authorized credit period.

(2) The damages, the timing of their applicability, and the conditions, if any, as provided by the tariff-rule methods allowed under paragraphs (g)(1) (i) and (ii) of this section also:

(i) Shall be clearly described in the tariff rule;

(ii) Shall be applied without unlawful prejudice and/or unjust discrimination between similarly situated shippers and/or consignees;

(iii) Shall be applied only to the nonpayment of original, separate and independent freight bills and shall not apply to aggregate *balance-due* claims sought for collection on past shipments by a bankruptcy trustee, or any other person or agent;

(iv) Shall not apply to instances of clear clerical or ministerial error such as non-receipt of a carrier's freight bill, or shipper's payment check lost in the mail, or carrier mailing of the freight bill to the wrong address;

(v) Shall not apply in any way to a charge for a transportation service if the carrier's bill of lading independently provides that the shipper is liable for fees incurred by the carrier in the collection of freight charges on that same transportation service;

(vi) shall be applied only after the authorized credit period, and when the carrier has issued a revised freight bill or notice of imposition of collection expense charges for late payment within 90 days after expiration of the authorized credit period.

(3) As an alternative to the tariff-rule methods allowed under paragraphs (g)(1) (i) and (ii) of this section, a carrier may, wholly outside of its tariff, assess collection charges though contract terms in a bill of lading. By using the carrier and its bill of lading, the shipper accepts the bill of lading terms.

(h) *Discrimination prohibited.* Tariff rules published pursuant to paragraphs (d), (e), and (f) of this section shall not result in unreasonable discrimination among shippers.

[50 FR 2290, Jan 16, 1985, as amended at 53 FR 6991, Mar. 4, 1988; 54 FR 30748, July 24, 1989]

§ 377.205 Presentation of freight bills.

(a) *''To be prepaid'' shipments.* (1) On ''to be prepaid'' shipments, the carrier shall present its freight bill for all transportation charges within the time period prescribed in paragraph (a)(2) of this section, except—

(i) As noted in paragraph (d) of this section, or

(ii) As otherwise excepted in this part.

(2) The time period for a carrier to present its freight bill for all transportation charges shall be 7 days, measured from the date the carrier received the shipment. This time period does not include Saturdays, Sundays, or legal holidays.

(b) *''Collect'' shipments.* (1) On ''collect'' shipments, the carrier shall present its freight bill for all transportation charges within the time period prescribed in paragraph (b)(2) and of this section, except—

(i) As noted in paragraph (d) of this section, or

(ii) As otherwise excepted in this part.

(2) The time period for a carrier to present its freight bill for all transportation charges shall be 7 days, measured from the date the shipment was delivered at its destination. This time period does not include Saturdays, Sundays, or legal holidays.

(c) *Bills or accompanying written notices shall state penalties for late payment, credit time limits and service charge and/or collection expense charge and discount terms.* When credit is extended, freight bills or a separate written notice accompanying a freight bill or a group of freight bills presented at one time shall state that ''failure timely to pay freight charges may be subject to tariff penalties'' (or a statement of similar import). The bills or other notice shall also state the time by which payment must be made and any applicable service charge and/or collection expense charge and discount terms.

(d) *When the carrier lacks sufficient information to compute tariff charges.* (1) When information sufficient to enable the carrier to compute the tariff charges is not then available to the carrier at its billing point, the carrier shall present its freight bill for payment within 7 days following the day upon which sufficient information becomes available at the billing point. This time period does not include Saturdays, Sundays, or legal holidays.

(2) A carrier shall not extend further credit to any shipper which fails to furnish sufficient information to allow the carrier to render a freight bill within a reasonable time after the shipment is tendered to the origin carrier.

(3) As used in this paragraph, the term ''shipper'' includes, but is not limited to, freight forwarders, and shippers' associations and shippers' agents.

[50 FR 2290, Jan 16, 1985, as amended at 54 FR 30748, July 24, 1989; 62 FR 15424, Apr. 1, 1997]

§ 377.207 Effect of mailing freight bills or payments.

(a) *Presentation of freight bills by mail.* When carriers present freight bills by mail, the time of mailing shall be deemed to be the time of presentation of the bills. The term *freight bills,* as used in this paragraph, includes both paper documents and billing by use of electronic media such as computer tapes or disks, when the mails are used to transmit them.

(b) *Payment by mail.* Wnen shippers mail acceptable checks, drafts, or money orders in payment of freight charges, the act of mailing them within the credit period shall be deemed to be the collection of the tariff charges within the credit period for the purposes of the regulations in this part.

(c) *Disputes as to date of mailing.* In case of dispute as to the date of mailing, the postmark shall be accepted as such date.

§ 377.209 Additional charges.

When a carrier—

(a) Has collected the amount of tariff charges represented in a freight bill presented by it as the total amount of such charges, and

(b) Thereafter presents to the shipper another freight bill for additional charges—

the carrier may extend credit in the amount of such additional charges for a period of 30 calendar days from the date of the presentation of the freight bill for the additional charges.

§ 377.211 Computation of time.

Time periods involving calendar days shall be calculated pursuant to 49 CFR 386.32(a).

[50 FR 2290, Jan 16, 1985. Redesignated at 61 FR 54709, Oct. 21, 1996, as amended at 62 FR 15424, Apr. 1, 1997]

§ 377.213 [Reserved]

§ 377.215 Household goods shipments by motor common carriers.

(a) *Exceptions—Household goods ''collect on delivery'' shipments.* The regulations in the other sections of this part and in paragraph (c) of this section do not apply when the carrier is required by 49 CFR 375.3(d) to relinquish possession of an otherwise ''collect on delivery'' household goods shipment in advance of payment of all of the charges.

(b) *Charge card reversed transactions.* The regulations of this part apply when—

(1) Charges for household goods movements are paid by use of charge cards pursuant to 49 CFR 375.19, and

(2) The shipper forces an involuntary extension of credit by the carrier by

causing the charge card issuer to reverse the charge transaction and charge payments back to the carrier's account.

(c) *Exceptions—House goods credit shipments.* The provisions in paragraphs (c)(1) through (3) of this section are exceptions to the other regulations in this part. They apply to credit extensions for household goods transportation by motor common carriers (except as provided in paragraph (a) of this section)—

(1) A freight bill shall be presented within 15 days (excluding Saturdays, Sundays, and legal holidays) of the date of delivery of a shipment at its destination.

(2) The credit of period is 7 days (excluding Saturdays, Sundays, and legal holidays).

(3) Motor Common carriers of household goods must provide in their tariffs that—

(i) The credit period shall automatically be extended to a total of 30 calendar days for any shipper who has not paid the carrier's freight bill within the 7-day period.

(ii) Such shipper will be assessed a service charge by the carrier equal to 1 percent of the amount of the freight bill, subject to a $10 minimum charge, for such extension of the credit period, and

(iii) No such carrier shall grant credit to any shipper who fails to pay a duly presented freight bill within the 30-day period, unless and until such shipper affirmatively satisfies the carrier that all future freight bills duly presented will be paid strictly in accordance with the rules and regulations prescribed by the Commission for the settlement of carrier rates and charges.

[50 FR 2290, Jan 16, 1985. Redesignated at 61 FR 54709, Oct. 21, 1996, as amended at 62 FR 15424, Apr. 1, 1997]

§ 377.217 Interline settlement of revenues.

Nothing in this part shall be interpreted as affecting the interline settlement of revenues from traffic which is transported over through routes composed of lines of common carriers subject to the Secretary's jurisdiction under 49 U.S.C. subtitle IV, part B.

[50 FR 2290, Jan 16, 1985. Redesignated at 61 FR 54709, Oct. 21, 1996, as amended at 62 FR 15424, Apr. 1, 1997]

PART 378—PROCEDURES GOVERNING THE PROCESSING, INVESTIGATION, AND DISPOSITION OF OVERCHARGE, DUPLICATE PAYMENT, OR OVERCOLLECTION CLAIMS

Sec.

378.1 Applicability.
378.2 Definitions.
378.3 Filing and processing claims.
378.4 Documentation of claims.
378.5 Investigation of claims.
378.6 Claim records.
378.7 Acknowledgment of claims.
378.8 Disposition of claims.
378.9 Disposition of unidentified payments, overcharges, duplicate payments, and overcollections not supported by claims.

AUTHORITY: 49 U.S.C. 13321, 14101, 14704, and 14705; 49 CFR 1.48.

SOURCE: 43 FR 41040, Sept. 14, 1978, unless otherwise noted. Redesignated at 61 FR 54707, Oct. 21, 1996.

§ 378.1 Applicability.

The regulations set forth in this part govern the processing of claims for overcharge, duplicate payment, or overcollection for the transportation of property in interstate or foreign commerce by motor common carriers and household goods freight forwarders subject to 49 U.S.C. subtitle IV, part B.

[43 FR 41040, Sept. 14, 1978, as amended at 51 FR 44297, Dec. 9, 1986; 62 FR 15424, Apr. 1, 1997]

§ 378.2 Definitions.

(a) *Carrier* means a motor common carrier or household goods freight forwarder subject to 49 U.S.C. subtitle IV, part B.

(b) *Overcharge* means an overcharge as defined in 49 U.S.C. 14704(b). It also includes duplicate payments as defined in paragraph (c) of this section and overcollections as defined in paragraph (d) of this section when a dispute exists between the parties concerning such charges.

(c) *Duplicate payment* means two or more payments for transporting the

same shipment. Where one or more payment is not in the exact amount of the applicable tariff rates and charges, refunds shall be made on the basis of the excess amount over the applicable tariff rates and charges.

(d) *Overcollection* means the receipt by a household goods carrier of a payment in excess of the transportation and/or accessorial charges applicable to a particular shipment of household goods, as defined in part 375 of this chapter, under tariffs lawfully on file with the United States Department of Transportation's Surface Transportation Board.

(e) *Unidentified payment* means a payment which a carrier has received but which the carrier is unable to match with its open accounts receivable or otherwise identify as being due for the performance of transportation services.

(f) *Claimant* means any shipper or receiver, or its authorized agent, filing a request with a carrier for the refund of an overcharge, duplicate payment, or overcollection.

[43 FR 41040, Sept. 14, 1978, as amended at 44 FR 66832, Nov. 21, 1979; 51 FR 34989, Oct. 1, 1986; 51 FR 44297, Dec. 9, 1986; 62 FR 15424, Apr. 1, 1997]

§378.3 Filing and processing claims.

(a) A claim for overcharge, duplicate payment, or overcollection shall not be paid unless filed in writing or electronically communicated (when agreed to by the carrier and shipper or receiver involved) with the carrier that collected the transportation charges. The collecting carrier shall be the carrier to process all such claims. When a claim is filed with another carrier that participated in the transportation, that carrier shall transmit the claim to the collecting carrier within 15 days after receipt of the claim. If the collecting carrier is unable to dispose of the claim for any reason, the claim may be filed with or transferred to any participating carrier for final disposition.

(b) A single claim may include more than one shipment provided the claim on each shipment involves:

(1) The same tariff issue or authority or circumstances,

(2) Single line service by the same carrier, or

(3) Service by the same interline carriers.

[43 FR 41040, Sept 14, 1978, as amended at 47 FR 12804, Mar. 25, 1982]

§378.4 Documentation of claims.

(a) Claims for overcharge, duplicate payment, or overcollection shall be accompanied by sufficient information to allow the carriers to conduct an investigation and pay or decline the claim within the time limitations set forth in §378.8. Claims shall include the name of the claimant, its file number, if any, and the amount of the refund sought to be recovered, if known.

(b) Except when the original freight bill is not a paper document but is electronically transmitted, claims for overcharge shall be accompanied by the original freight bill. Additional information may include, but is not limited to, the following:

(1) The rate, classification, or commodity description or weight claimed to have been applicable.

(2) Complete tariff authority for the rate, classification, or commodity description claimed.

(3) Freight bill payment information.

(4) Other documents or data which is believed by claimant to substantiate the basis for its claim.

(c) Claims for duplicate payment and overcollection shall be accompanied by the original freight bill(s) for which charges were paid (except when the original freight bill is not a paper document but is electronically transmitted) and by freight bill payment information.

(d) Regardless of the provisions of paragraphs (a), (b), and (c) of this section, the failure to provide sufficient information and documentation to allow a carrier to conduct an investigation and pay or decline the claim within the allowable time limitation shall not constitute grounds for disallowance of the claim. Rather, the carrier shall comply with §378.5(c) to obtain the additional information required.

(e) A carrier shall accept copies instead of the orginal documents required to be submitted in this section where the carrier is furnished with an agreement entered into by the claimant which indemnifies the carrier for subsequent duplicate claims which

might be filed and supported by the original documents.

[43 FR 41040, Sept. 14, 1978, as amended at 44 FR 4679, Jan. 23, 1979; 47 FR 12804, Mar. 25, 1982; 62 FR 15424, Apr. 1, 1997]

§ 378.5 Investigation of claims.

(a) Upon receipt of a claim, whether written or otherwise, the processing carrier shall promptly initiate an investigation and establish a file, as required by § 378.6.

(b) If a carrier discovers an overcharge, duplicate payment, or overcollection which has not been the subject of a claim, it shall promptly initiate an investigation and comply with the provisions in § 378.9.

(c) In the event the carrier processing the claim requires information or documents in addition to that submitted with the claim, the carrier shall promptly notify the claimant and request the information required. This includes notifying the claimant that a written or electronically transmitted claim must be filed before the carrier becomes subject to the time limits for settling such a claim under § 378.8.

[43 FR 41040, Sept. 14, 1978, as amended at 47 FR 12804, Mar. 25, 1982; 62 FR 15424, 15425, Apr. 1, 1997]

§ 378.6 Claim records.

At the time a claim is received the carrier shall create a separate file and assign it a successive claim file number and note that number on all documents filed in support of the claim and all records and correspondence with respect to the claim, including the written or electronic acknowledgment of receipt required under § 378.7. If pertinent to the disposition of the claim, the carrier shall also note that number on the shipping order and delivery receipt, if any, covering the shipment involved.

[47 FR 12804, Mar. 25, 1982, as amended at 62 FR 15425, Apr. 1, 1997]

§ 378.7 Acknowledgment of claims.

Upon receipt of a written or electronically transmitted claim, the carrier shall acknowledge its receipt in writing or electronically to the claimant within 30 days after the date of receipt except when the carrier shall have paid or declined in writing or electronically within that period. The carrier shall include the date of receipt in its written or electronic claim which shall be placed in the file for that claim.

[47 FR 12804, Mar. 25, 1982]

§ 378.8 Disposition of claims.

The processing carrier shall pay, decline to pay, or settle each written or electronically communicated claim within 60 days after its receipt by that carrier, except where the claimant and the carrier agree in writing or electronically to a specific extension based upon extenuating circumstances. If the carrier declines to pay a claim or makes settlement in an amount different from that sought, the carrier shall notify the claimant in writing or electronically, of the reason(s) for its action, citing tariff authority or other pertinent information developed as a result of its investigation.

[47 FR 12804, Mar. 25, 1982]

§ 378.9 Disposition of unidentified payments, overcharges, duplicate payments, and overcollections not supported by claims.

(a)(1) Carriers shall establish procedures for identifying and properly applying all unidentified payments. If a carrier does not have sufficient information with which properly to apply such a payment, the carrier shall notify the payor of the unidentified payment within 60 days of receipt of the payment and request information which will enable it to identify the payment. If the carrier does not receive the information requested within 90 days from the date of the notice, the carrier may treat the unidentified payment as a payment in fact of freight charges owing to it. Following the 90-day period, the regular claims procedure under this part shall be applicable.

(2) Notice shall be in writing and clearly indicate that it is a final notice and not a bill. Notice shall include: The check number, amount, and date; the payor's name; and any additional basic information the carrier is able to provide. The final notice also must inform payor that: (i) Applicable regulations

allow the carrier to conditionally retain the payment as revenue in the absence of a timely response by the payor; and (ii) following the 90-day period the regular claims procedure shall be applicable.

(3) Upon a carrier's receipt of information from the payor, the carrier shall, within 14 days: (i) Make a complete refund of such funds to the payor; or (ii) notify the payor that the information supplied is not sufficient to identify the unapplied payment and request additional information; or (iii) notify the payor of the carrier's determination that such payment was applicable to particular freight charges lawfully due the carrier. Where no refund is made by the carrier, the carrier shall advise the payor of its right to file a formal claim for refund with the carrier in accordance with the regular claims procedure under this part.

(b) When a carrier which participates in a transportation movement, but did not collect the transporation charges, finds that an overpayment has been made, that carrier shall immediately notify the collecting carrier. When the collecting carrier (when single or joint line haul) discovers or is notified by such a participating carrier that an overcharge, duplicate payment, or overcollection exists for any tranportation charge which has not been the subject of a claim, the carrier shall create a file as if a claim had been submitted and shall record in the file the date it discovered or was notified of the overpayment. The carrier that collected the charges shall then refund the amount of the overpayment to the person who paid the transportation charges or to the person that made duplicate payment within 30 days from the date of such discovery or notification.

[43 FR 41040, Sept. 14, 1978, as amended at 44 FR 66832, Nov. 21, 1979]

PART 379—PRESERVATION OF RECORDS

Sec.

379.1 Applicability.
379.3 Records required to be retained.
379.5 Protection and storage of records.
379.7 Preservation of records.
379.9 Companies going out of business.
379.11 Waiver of requirements of the regulations in this part.
379.13 Disposition and retention of records.
APPENDIX A TO PART 379—SCHEDULE OF RECORDS AND PERIODS OF RETENTION

AUTHORITY: 49 U.S.C. 13301, 14122 and 14123; 49 CFR 1.48.

SOURCE: 62 FR 32044, June 12, 1997, unless otherwise noted.

§379.1 Applicability.

(a) The preservation of record rules contained in this part shall apply to the following:

(1) Motor carriers and brokers;

(2) Water carriers; and

(3) Household goods freight forwarders.

(b) This part applies also to the preservation of accounts, records and memoranda of traffic associations, weighing and inspection bureaus, and other joint activities maintained by or on behalf of companies listed in paragraph (a) of this section.

§379.3 Records required to be retained.

Companies subject to this part shall retain records for the minimum retention periods provided in appendix A to this part. After the required retention periods, the records may be destroyed at the discretion of each company's management. It shall be the obligation of the subject company to maintain records that adequately support financial and operational data required by the Secretary. The company may request a ruling from the Secretary on the retention of any record. The provisions of this part shall not be construed as excusing compliance with the lawful requirements of any other governmental body prescribing longer retention periods for any category of records.

§379.5 Protection and storage of records.

(a) The company shall protect records subject to this part from fires, floods, and other hazards, and safeguard the records from unnecessary exposure to deterioration from excessive humidity, dryness, or lack of ventilation.

(b) The company shall notify the Secretary if prescribed records are substantially destroyed or damaged before the term of the prescribed retention periods.

§ 379.7 Preservation of records.

(a) All records may be preserved by any technology that is immune to alteration, modification, or erasure of the underlying data and will enable production of an accurate and unaltered paper copy.

(b) Records not originally preserved on hard copy shall be accompanied by a statement executed by a person having personal knowledge of the facts indicating the type of data included within the records. One comprehensive statement may be executed in lieu of individual statements for multiple records if the type of data included in the multiple records is common to all such records. The records shall be indexed and retained in such a manner as will render them readily accessible. The company shall have facilities available to locate, identify and produce legible paper copies of the records.

(c) Any significant characteristic, feature or other attribute that a particular medium will not preserve shall be clearly indicated at the beginning of the applicable records as appropriate.

(d) The printed side of forms, such as instructions, need not be preserved for each record as long as the printed matter is common to all such forms and an identified specimen of the form is maintained on the medium for reference.

§ 379.9 Companies going out of business.

The records referred to in the regulations in this part may be destroyed after business is discontinued and the company is completely liquidated. The records may not be destroyed until dissolution is final and all pending transactions and claims are completed. When a company is merged with another company under jurisdiction of the Secretary, the successor company shall preserve records of the merged company in accordance with the regulations in this part.

§ 379.11 Waiver of requirements of the regulations in this part.

A waiver from any provision of the regulations in this part may be made by the Secretary upon his/her own initiative or upon submission of a written request by the company. Each request for waiver shall demonstrate that unusual circumstances warrant a departure from prescribed retention periods, procedures, or techniques, or that compliance with such prescribed requirements would impose an unreasonable burden on the company.

§ 379.13 Disposition and retention of records.

The schedule in appendix A to this part shows periods that designated records shall be preserved. The descriptions specified under the various general headings are for convenient reference and identification, and are intended to apply to the items named regardless of what the records are called in individual companies and regardless of the record media. The retention periods represent the prescribed number of years from the date of the document and not calendar years. Records not listed in appendix A to this part shall be retained as determined by the management of each company.

Appendix A to Part 379

SCHEDULE OF RECORDS AND PERIODS OF RETENTION

Item and category of records	Retention period
A. Corporate and General	
1. Incorporation and reorganization:	
(a) Charter or certificate of incorporation and amendments	Note A.
(b) Legal documents related to mergers, consolidations, reorganization, receiverships and similar actions which affect the identity or organization of the company.	Note A.
2. Minutes of Directors, Executive Committees, Stockholders and other corporate meetings.	Note A.
3. Titles, franchises and authorities:	

SCHEDULE OF RECORDS AND PERIODS OF RETENTION—Continued

Item and category of records	Retention period
(a) Certificates of public convenience and necessity issued by regulating bodies.	Until expiration or cancellation.
(b) Operating authorizations and exemptions to operate	Until expiration or cancellation.
(c) Copies of formal orders of regulatory bodies served upon the company	Note A.
(d) Deeds, charters, and other title papers	Until disposition of property.
(e) Patents and patent records	Note A.
4. Annual reports or statements to stockholders	3 years.
5. Contracts and agreements:	
(a) Service contracts, such as for operational management, accounting, financial or legal services, and agreements with agents.	Until expiration or termination plus 3 years.
(b) Contracts and other agreements relating to the construction, acquisition or sale of real property and equipment except as otherwise provided in (a) above.	Until expiration or termination plus 3 years.
(c) Contracts for the purchase or sale of material and supplies except as provided in (a) above.	Until expiration.
(d) Shipping contracts for transportation or caretakers of freight	Until expiration.
(e) Contracts with employees and employee bargaining groups	Until expiration.
(f) Contracts, leases and agreements, not specifically provided for in this section.	Until expiration or termination plus 1 year.
6. Accountant's auditor's, and inspector's reports:	
(a) Certifications and reports of examinations and audits conducted by public accountants.	3 years.
(b) Reports of examinations and audits conducted by internal auditors, time inspectors, and others.	3 years.
7. Other	Note A.
B. Treasury	
1. Capital stock records:	
(a) Capital stock ledger	Note A.
(b) Capital stock certificates, records of or stubs of	Note A.
(c) Stock transfer register	Note A.
2. Long-term debt records:	
(a) Bond indentures, underwritings, mortgages, and other long-term credit agreements.	Until redemption plus 3 years.
(b) Registered bonds and debenture ledgers	Until redemption plus 3 years.
(c) Stubs or similar records of bonds or other long-term debt issued	Note A.
3. Authorizations from regulatory bodies for issuance of securities including applications, reports, and supporting papers.	Note A.
4. Records of securities owned, in treasury, or held by custodians, detailed ledgers and journals, or their equivalent.	Until the securities are sold, redeemed or otherwise disposed of.
5. Other	Note A.
C. Financial and Accounting	
1. Ledgers:	
(a) General and subsidiary ledgers with indexes	Until discontinuance of use plus 3 years.
(b) Balance sheets and trial balance sheets of general and subsidiary ledgers	3 years.
2. Journals:	
(a) General journals	Until discontinuance of use plus 3 years.
(b) Subsidiary journals and any supporting data, except as otherwise provided for, necessary to explain journal entries.	3 years.
3. Cash books:	
(a) General cash books	Until discontinuance of use plus 3 years.
(b) Subsidiary cash books	3 years.
4. Vouchers:	
(a) Voucher registers, indexes, or equivalent	3 years.
(b) Paid and canceled vouchers, expenditure authorizations, detailed distribution sheets and other supporting data including original bills and invoices, if not provided for elsewhere.	3 years.
(c) Paid drafts, paid checks, and receipts for cash paid out	3 years.
5. Accounts receivable:	
(a) Record or register of accounts receivable, indexes thereto, and summaries of distribution.	3 years after settlement.
(b) Bills issued for collection and supporting data	3 years after settlement.
(c) Authorization for writing off receivables	1 year.
(d) Reports and statements showing age and status of receivables	1 year.
6. Records of accounting codes and instructions	3 years after discontinuance.
7. Other	Note A.
D. Property and Equipment	

Note.—All accounts, records, and memoranda necessary for making a complete analysis of the cost or value of property shall be retained for the periods shown. If any of the records elsewhere provided for in this schedule are of this character, they shall be retained for the periods shown below, regardless of any lesser retention period assigned.

1. Property records:

SCHEDULE OF RECORDS AND PERIODS OF RETENTION—Continued

Item and category of records	Retention period
(a) Records which maintain complete information on cost or other value of all real and personal property or equipment.	3 years after disposition of property.
(b) Records of additions and betterments made to property and equipment	3 years after disposition of property.
(c) Records pertaining to retirements and replacements of property and equipment.	3 years after disposition of property.
(d) Records pertaining to depreciation	3 years after disposition of property.
(e) Records of equipment number changes	3 years after disposition of property.
(f) Records of motor and engine changes	3 years after disposition of property.
(g) Records of equipment lightweighed and stenciled	Only current or latest records.
2. Engineering records of property changes actually made	3 years after disposition of property.
3. Other	Note A.
E. Personnel and Payroll	
1. Personnel and payroll records	1 year.
F. Insurance and Claims	
1. Insurance records:	
(a) Schedules of insurance against fire, storms, and other hazards and records of premium payments.	Until expiration plus 1 year.
(b) Records of losses and recoveries from insurance companies and supporting papers.	1 year after settlement.
(c) Insurance policies	Until expiration of coverage plus 1 year.
2. Claims records:	
(a) Claim registers, card or book indexes, and other records which record personal injury, fire and other claims against the company, together with all supporting data.	1 year after settlement.
(b) Claims registers, card or book indexes, and other records which record overcharges, damages, and other claims filed by the company against others, together with all supporting data.	1 year after settlement.
(c) Records giving the details of authorities issued to agents, carriers, and others for participation in freight claims.	3 years.
(d) Reports, statements and other data pertaining to personal injuries or damage to property when not necessary to support claims or vouchers.	3 years.
(e) Reports, statements, tracers, and other data pertaining to unclaimed, over, short, damaged, and refused freight, when not necessary to support claims or vouchers.	1 year.
(f) Authorities for disposal of unclaimed, damaged, and refused freight	3 years.
3. Other	Note A.
G. Taxes	
1. Taxes.	Note A.
H. Purchases and Stores	
1. Purchases and stores.	Note A.
I. Shipping and Agency Documents	
1. Bills of lading and releases:	
(a) Consignors' shipping orders, consignors' shipping tickets, and copies of bills of lading, freight bills from other carriers and other similar documents furnished the carrier for movement of freight.	1 year.
(b) Shippers' order-to-notify bills of lading taken up and canceled	1 year.
2. Freight waybills:	
(a) Local waybills	1 year.
(b) Interline waybills received from and made to other carriers	1 year.
(c) Company freight waybills	1 year.
(d) Express waybills	1 year.
3. Freight bills and settlements:	
(a) Paid copy of freight bill retained to support receipt of freight charges:	
(1) Bus express freight bills provided no claim has been filed	1 year.
(2) All other freight bills	1 year.
(b) Paid copy of freight bill retained to support payment of freight charges to other carriers:	
(1) Bus express freight bills provided no claim has been filed	1 year.
(2) All other freight bills	1 year.
(c) Records of unsettled freight bills and supporting papers	1 year after disposition.
(d) Records and reports of correction notices	1 year.
4. Other freight records:	
(a) Records of freight received, forwarded, and delivered	1 year.
(b) Notice to consignees of arrival of freight; tender of delivery	1 year.
5. Agency records (to include conductors, pursers, stewards, and others):	
(a) Cash books	1 year.
(b) Remittance records, bank deposit slips and supporting papers	1 year.
(c) Balance sheets and supporting papers	1 year.
(d) Statements of corrections in agents' accounts	1 year.

SCHEDULE OF RECORDS AND PERIODS OF RETENTION—Continued

Item and category of records	Retention period
(e) Other records and reports pertaining to ticket sales, baggage handled, miscellaneous collections, refunds, adjustments, etc..	1 year.
J. Transportation	
1. Records pertaining to transportation of household goods:	
(a) Estimate of charges	1 year.
(b) Order for service	1 year.
(c) Vehicle-load manifest	1 year.
(d) Descriptive inventory	1 year.
2. Records and reports pertaining to operation of marine and floating equipment:	
(a) Ship log	3 years.
(b) Ship articles	3 years.
(c) Passenger and room list	3 years.
(d) Floatmen's barge, lighter, and escrow captain's reports, demurrage records, towing reports and checks sheets.	2 years.
3. Dispatchers' sheets, registers, and other records pertaining to movement of transportation equipment.	3 years.
4. Import and export records including bonded freight and steamship engagements.	2 years.
5. Records, reports, orders and tickets pertaining to weighting of freight	3 years.
6. Records of loading and unloading of transportation equipment	2 years.
7. Records pertaining to the diversion or reconsignment of freight, including requests, tracers, and correspondence.	2 years.
8. Other	Note A.
K. Supporting Data for Reports and Statistics	
1. Supporting data for reports filed with the Federal Highway Administration, the Surface Transportation Board, the Department of Transportation's Bureau of Transportation Statistics and regulatory bodies:	
(a) Supporting data for annual financial, operating and statistical reports	3 years.
(b) Supporting data for periodical reports of operating revenues, expenses, and income.	3 years.
(c) Supporting data for reports detailing use of proceeds from issuance or sale of company securities.	3 years.
(d) Supporting data for valuation inventory reports and records. This includes related notes, maps and sketches, underlying engineering, land, and accounting reports, pricing schedules, summary or collection sheets, yearly reports of changes and other miscellaneous data, all relating to the valuation of the company's property by the Federal Highway Administration, the Surface Transportation Board, the Department of Transportation's Bureau of Transportation Statistics or other regulatory body.	3 years after disposition of the property.
2. Supporting data for periodical reports of accidents, inspections, tests, hours of service, repairs, etc..	3 years.
3. Supporting data for periodical statistical of operating results or performance by tonnage, mileage, passengers carried, piggyback traffic, commodities, costs, analyses of increases and decreases, or otherwise.	3 years.
M. Miscellaneous	
1. Index of records	Until revised as record structure changes.
2. Statement listing records prematurely destroyed or lost	For the remainder of the period as prescribed for records destroyed.

Note A.—Records referenced to this note shall be maintained as determined by the designated records supervisory official. Companies should be mindful of the record retention requirements of the Internal Revenue Service, Securities and Exchange Commission, State and local jurisdictions, and other regulatory agencies. Companies shall exercise reasonable care in choosing retention periods, and the choice of retention periods shall reflect past experiences, company needs, pending litigation, and regulatory requirements.

PART 382—CONTROLLED SUBSTANCES AND ALCOHOL USE AND TESTING

Subpart A—General

Sec.
382.101 Purpose.
382.103 Applicability.
382.105 Testing procedures.
382.107 Definitions.
382.109 Preemption of State and local laws.
382.111 Other requirements imposed by employers.
382.113 Requirement for notice.
382.115 Starting date for testing programs.

Subpart B—Prohibitions

382.201 Alcohol concentration.
382.205 On-duty use.
382.207 Pre-duty use.
382.209 Use following an accident.

382.211 Refusal to submit to a required alcohol or controlled substances test.
382.213 Controlled substances use.
382.215 Controlled substances testing.

Subpart C—Tests Required

382.301 Pre-employment testing.
382.303 Post-accident testing.
382.305 Random testing.
382.307 Reasonable suspicion testing.
382.309 Return-to-duty testing.
382.311 Follow-up testing.

Subpart D—Handling of Test Results, Record Retention, and Confidentiality

382.401 Retention of records.
382.403 Reporting of results in a management information system.
382.405 Access to facilities and records.
382.407 Medical review officer notifications to the employer.
382.409 Medical review officer record retention for controlled substances.
382.411 Employer notifications.
382.413 Inquiries for alcohol and controlled substances information from previous employers.

Subpart E—Consequences for Drivers Engaging in Substance Use-Related Conduct

382.501 Removal from safety-sensitive function.
382.503 Required evaluation and testing.
382.505 Other alcohol-related conduct.
382.507 Penalties.

Subpart F—Alcohol Misuse and Controlled Substances Use Information, Training, and Referral

382.601 Employer obligation to promulgate a policy on the misuse of alcohol and use of controlled substances.
382.603 Training for supervisors.
382.605 Referral, evaluation, and treatment.

AUTHORITY: 49 U.S.C. 31133, 31136, 31301 *et seq.*, 31502; and 49 CFR 1.48.

SOURCE: 61 FR 9553, Mar. 8, 1996, unless otherwise noted.

Subpart A—General

§ 382.101 Purpose.

The purpose of this part is to establish programs designed to help prevent accidents and injuries resulting from the misuse of alcohol or use of controlled substances by drivers of commercial motor vehicles.

§ 382.103 Applicability.

(a) This part applies to every person and to all employers of such persons who operate a commercial motor vehicle in commerce in any State, and is subject to:

(1) The commercial driver's license requirements of part 383 of this subchapter;

(2) The Licencia Federal de Conductor (Mexico) requirements; or

(3) The commercial driver's license requirements of the Canadian National Safety Code.

(b) An employer who employs himself/herself as a driver must comply with both the requirements in this part that apply to employers and the requirements in this part that apply to drivers. An employer who employs only himself/herself as a driver shall implement a random alcohol and controlled substances testing program of two or more covered employees in the random testing selection pool.

(c) The exceptions contained in §390.3(f) of this subchapter do not apply to this part. The employers and drivers identified in §390.3(f) must comply with the requirements of this part, unless otherwise specifically provided in paragraph (d) of this section.

(d) *Exceptions.* This part shall not apply to employers and their drivers:

(1) Required to comply with the alcohol and/or controlled substances testing requirements of parts 653 and 654 of this title (Federal Transit Administration alcohol and controlled substances testing regulations); or

(2) Who a State must waive from the requirements of part 383 of this subchapter. These individuals include active duty military personnel; members of the reserves; and members of the national guard on active duty, including personnel on full-time national guard duty, personnel on part-time national guard training and national guard military technicians (civilians who are required to wear military uniforms), and active duty U.S. Coast Guard personnel;

(3) Who a State has, at its discretion, exempted from the requirements of part 383 of this subchapter. These individuals may be:

(i) Operators of a farm vehicle which is:

(A) Controlled and operated by a farmer;

(B) Used to transport either agricultural products, farm machinery, farm supplies, or both to or from a farm;

(C) Not used in the operations of a common or contract motor carrier; and

(D) Used within 241 kilometers (150 miles) of the farmer's farm.

(ii) Firefighters or other persons who operate commercial motor vehicles which are necessary for the preservation of life or property or the execution of emergency governmental functions, are equipped with audible and visual signals, and are not subject to normal traffic regulation.

[61 FR 9553, Mar. 8, 1996, as amended at 62 FR 1296, Jan. 9, 1997]

§ 382.105 Testing procedures.

Each employer shall ensure that all alcohol or controlled substances testing conducted under this part complies with the procedures set forth in part 40 of this title. The provisions of part 40 of this title that address alcohol or controlled substances testing are made applicable to employers by this part.

§ 382.107 Definitions.

Words or phrases used in this part are defined in §§386.2 and 390.5 of this subchapter, and §40.3 of this title, except as provided herein—

Alcohol means the intoxicating agent in beverage alcohol, ethyl alcohol, or other low molecular weight alcohols including methyl and isopropyl alcohol.

Alcohol concentration (or content) means the alcohol in a volume of breath expressed in terms of grams of alcohol per 210 liters of breath as indicated by an evidential breath test under this part.

Alcohol use means the consumption of any beverage, mixture, or preparation, including any medication, containing alcohol.

Commerce means:

(1) Any trade, traffic or transportation within the jurisdiction of the United States between a place in a State and a place outside of such State, including a place outside of the United States and

(2) Trade, traffic, and transportation in the United States which affects any trade, traffic, and transportation described in paragraph (1) of this definition.

Commercial motor vehicle means a motor vehicle or combination of motor vehicles used in commerce to transport passengers or property if the motor vehicle—

(1) Has a gross combination weight rating of 11,794 or more kilograms (26,001 or more pounds) inclusive of a towed unit with a gross vehicle weight rating of more than 4,536 kilograms (10,000 pounds); or

(2) Has a gross vehicle weight rating of 11,794 or more kilograms (26,001 or more pounds); or

(3) Is designed to transport 16 or more passengers, including the driver; or

(4) Is of any size and is used in the transportation of materials found to be hazardous for the purposes of the Hazardous Materials Transportation Act and which require the motor vehicle to be placarded under the Hazardous Materials Regulations (49 CFR part 172, subpart F).

Confirmation test for alcohol testing means a second test, following a screening test with a result of 0.02 or greater, that provides quantitative data of alcohol concentration. For controlled substances testing means a second analytical procedure to identify the presence of a specific drug or metabolite which is independent of the screen test and which uses a different technique and chemical principle from that of the screen test in order to ensure reliability and accuracy. (Gas chromatography/mass spectrometry (GC/MS) is the only authorized confirmation method for cocaine, marijuana, opiates, amphetamines, and phencyclidine.)

Consortium means an entity, including a group or association of employers or contractors, that provides alcohol or controlled substances testing as required by this part, or other DOT alcohol or controlled substances testing rules, and that acts on behalf of the employers.

Controlled substances mean those substances identified in §40.21(a) of this title.

Disabling damage means damage which precludes departure of a motor

vehicle from the scene of the accident in its usual manner in daylight after simple repairs.

(1) *Inclusions.* Damage to motor vehicles that could have been driven, but would have been further damaged if so driven.

(2) *Exclusions.*

(i) Damage which can be remedied temporarily at the scene of the accident without special tools or parts.

(ii) Tire disablement without other damage even if no spare tire is available.

(iii) Headlight or taillight damage.

(iv) Damage to turn signals, horn, or windshield wipers which make them inoperative.

DOT Agency means an agency (or ''operating administration'') of the United States Department of Transportation administering regulations requiring alcohol and/or drug testing (14 CFR parts 61, 63, 65, 121, and 135; 49 CFR parts 199, 219, 382, 653 and 654), in accordance with part 40 of this title.

Driver means any person who operates a commercial motor vehicle. This includes, but is not limited to: Full time, regularly employed drivers; casual, intermittent or occasional drivers; leased drivers and independent, owner-operator contractors who are either directly employed by or under lease to an employer or who operate a commercial motor vehicle at the direction of or with the consent of an employer.

Employer means any person (including the United States, a State, District of Columbia, tribal government, or a political subdivision of a State) who owns or leases a commercial motor vehicle or assigns persons to operate such a vehicle. The term *employer* includes an employer's agents, officers and representatives.

Licensed medical practitioner means a person who is licensed, certified, and/or registered, in accordance with applicable Federal, State, local, or foreign laws and regulations, to prescribe controlled substances and other drugs.

Performing (a safety-sensitive function) means a driver is considered to be performing a safety-sensitive function during any period in which he or she is actually performing, ready to perform, or immediately available to perform any safety-sensitive functions.

Positive rate means the number of positive results for random controlled substances tests conducted under this part plus the number of refusals of random controlled substances tests required by this part, divided by the total of random controlled substances tests conducted under this part plus the number of refusals of random tests required by this part.

Refuse to submit (to an alcohol or controlled substances test) means that a driver:

(1) Fails to provide adequate breath for alcohol testing as required by part 40 of this title, without a valid medical explanation, after he or she has received notice of the requirement for breath testing in accordance with the provisions of this part,

(2) Fails to provide an adequate urine sample for controlled substances testing as required by part 40 of this title, without a genuine inability to provide a specimen (as determined by a medical evaluation), after he or she has received notice of the requirement for urine testing in accordance with the provisions of this part, or

(3) Engages in conduct that clearly obstructs the testing process.

Safety-sensitive function means all time from the time a driver begins to work or is required to be in readiness to work until the time he/she is relieved from work and all responsibility for performing work. Safety-sensitive functions shall include:

(1) All time at an employer or shipper plant, terminal, facility, or other property, or on any public property, waiting to be dispatched, unless the driver has been relieved from duty by the employer;

(2) All time inspecting equipment as required by §§ 392.7 and 392.8 of this subchapter or otherwise inspecting, servicing, or conditioning any commercial motor vehicle at any time;

(3) All time spent at the driving controls of a commercial motor vehicle in operation;

(4) All time, other than driving time, in or upon any commercial motor vehicle except time spent resting in a sleeper berth (a berth conforming to the requirements of § 393.76 of this subchapter);

(5) All time loading or unloading a vehicle, supervising, or assisting in the loading or unloading, attending a vehicle being loaded or unloaded, remaining in readiness to operate the vehicle, or in giving or receiving receipts for shipments loaded or unloaded; and

(6) All time repairing, obtaining assistance, or remaining in attendance upon a disabled vehicle.

Screening test (also known as initial test) In alcohol testing, it means an analytical procedure to determine whether a driver may have a prohibited concentration of alcohol in his or her system. In controlled substance testing, it means an immunoassay screen to eliminate ''negative'' urine specimens from further consideration.

Violation rate means the number of drivers (as reported under § 382.305 of this part) found during random tests given under this part to have an alcohol concentration of 0.04 or greater, plus the number of drivers who refuse a random test required by this part, divided by the total reported number of drivers in the industry given random alcohol tests under this part plus the total reported number of drivers in the industry who refuse a random test required by this part.

[61 FR 9553, Mar. 8, 1996, as amended at 61 FR 37224, July 17, 1996]

§ 382.109 Preemption of State and local laws.

(a) Except as provided in paragraph (b) of this section, this part preempts any State or local law, rule, regulation, or order to the extent that:

(1) Compliance with both the State or local requirement and this part is not possible; or

(2) Compliance with the State or local requirement is an obstacle to the accomplishment and execution of any requirement in this part.

(b) This part shall not be construed to preempt provisions of State criminal law that impose sanctions for reckless conduct leading to actual loss of life, injury, or damage to property, whether the provisions apply specifically to transportation employees, employers, or the general public.

§ 382.111 Other requirements imposed by employers.

Except as expressly provided in this part, nothing in this part shall be construed to affect the authority of employers, or the rights of drivers, with respect to the use of alcohol, or the use of controlled substances, including authority and rights with respect to testing and rehabilitation.

§ 382.113 Requirement for notice.

Before performing an alcohol or controlled substances test under this part, each employer shall notify a driver that the alcohol or controlled substances test is required by this part. No employer shall falsely represent that a test is administered under this part.

§ 382.115 Starting date for testing programs.

(a) *All domestic employers.* Each domestic-domiciled employer that begins commercial motor vehicle operations will implement the requirements of this part on the date the employer begins such operations.

(b) *Large foreign employers.* Each foreign-domiciled employer with fifty or more drivers assigned to operate commercial motor vehicles in North America on December 17, 1995, must implement the requirements of this part beginning on July 1, 1996.

(c) *Small foreign employers.* Each foreign-domiciled employer with less than fifty drivers assigned to operate commercial motor vehicles in North America on December 17, 1995, must implement the requirements of this part beginning on July 1, 1997.

(d) *All foreign employers.* Each foreign-domiciled employer that begins commercial motor vehicle operations in the United States after December 17, 1995, but before July 1, 1997, must implement the requirements of this part beginning on July 1, 1997. A foreign employer that begins commercial motor vehicle operations in the United States on or after July 1, 1997, must implement the requirements of this part on the date the foreign employer begins such operations.

[62 FR 37151, July 11, 1997]

Subpart B—Prohibitions

§ 382.201 Alcohol concentration.

No driver shall report for duty or remain on duty requiring the performance of safety-sensitive functions while having an alcohol concentration of 0.04 or greater. No employer having actual knowledge that a driver has an alcohol concentration of 0.04 or greater shall permit the driver to perform or continue to perform safety-sensitive functions.

§ 382.205 On-duty use.

No driver shall use alcohol while performing safety-sensitive functions. No employer having actual knowledge that a driver is using alcohol while performing safety-sensitive functions shall permit the driver to perform or continue to perform safety- sensitive functions.

§ 382.207 Pre-duty use.

No driver shall perform safety-sensitive functions within four hours after using alcohol. No employer having actual knowledge that a driver has used alcohol within four hours shall permit a driver to perform or continue to perform safety-sensitive functions.

§ 382.209 Use following an accident.

No driver required to take a post-accident alcohol test under § 382.303 of this part shall use alcohol for eight hours following the accident, or until he/she undergoes a post- accident alcohol test, whichever occurs first.

§ 382.211 Refusal to submit to a required alcohol or controlled substances test.

No driver shall refuse to submit to a post-accident alcohol or controlled substances test required under § 382.303, a random alcohol or controlled substances test required under § 382.305, a reasonable suspicion alcohol or controlled substances test required under § 382.307, or a follow-up alcohol or controlled substances test required under § 382.311. No employer shall permit a driver who refuses to submit to such tests to perform or continue to perform safety-sensitive functions.

§ 382.213 Controlled substances use.

(a) No driver shall report for duty or remain on duty requiring the performance of safety-sensitive functions when the driver uses any controlled substance, except when the use is pursuant to the instructions of a licensed medical practitioner, as defined in § 382.107 of this part, who has advised the driver that the substance will not adversely affect the driver's ability to safely operate a commercial motor vehicle.

(b) No employer having actual knowledge that a driver has used a controlled substance shall permit the driver to perform or continue to perform a safety-sensitive function.

(c) An employer may require a driver to inform the employer of any therapeutic drug use.

§ 382.215 Controlled substances testing.

No driver shall report for duty, remain on duty or perform a safety-sensitive function, if the driver tests positive for controlled substances. No employer having actual knowledge that a driver has tested positive for controlled substances shall permit the driver to perform or continue to perform safety-sensitive functions.

Subpart C—Tests Required

§ 382.301 Pre-employment testing.

(a) Prior to the first time a driver performs safety-sensitive functions for an employer, the driver shall undergo testing for alcohol and controlled substances as a condition prior to being used, unless the employer uses the exception in paragraphs (c) and (d) of this section. No employer shall allow a driver, who the employer intends to hire or use, to perform safety-sensitive functions unless the driver has been administered an alcohol test with a result indicating an alcohol concentration less than 0.04, and has received a controlled substances test result from the MRO indicating a verified negative test result. If a pre-employment alcohol test result under this section indicates an alcohol content of 0.02 or greater but less than 0.04, the provision of § 382.505 shall apply.

(b) *Exception for pre-employment alcohol testing.* An employer is not required to administer an alcohol test required by paragraph (a) of this section if:

(1) The driver has undergone an alcohol test required by this section or the alcohol misuse rule of another DOT agency under part 40 of this title within the previous six months, with a result indicating an alcohol concentration less than 0.04; and

(2) The employer ensures that no prior employer of the driver of whom the employer has knowledge has records of a violation of this part or the alcohol misuse rule of another DOT agency within the previous six months.

(c) *Exception for pre-employment controlled substances testing.* An employer is not required to administer a controlled substances test required by paragraph (a) of this section if:

(1) The driver has participated in a controlled substances testing program that meets the requirements of this part within the previous 30 days; and

(2) While participating in that program, either

(i) Was tested for controlled substances within the past 6 months (from the date of application with the employer) or

(ii) Participated in the random controlled substances testing program for the previous 12 months (from the date of application with the employer); and

(3) The employer ensures that no prior employer of the driver of whom the employer has knowledge has records of a violation of this part or the controlled substances use rule of another DOT agency within the previous six months.

(d)(1) An employer who exercises the exception in either paragraph (b) or (c) of this section shall contact the alcohol and/or controlled substances testing program(s) in which the driver participates or participated and shall obtain and retain from the testing program(s) the following information:

(i) Name(s) and address(es) of the program(s).

(ii) Verification that the driver participates or participated in the program(s).

(iii) Verification that the program(s) conforms to part 40 of this title.

(iv) Verification that the driver is qualified under the rules of this part, including that the driver has not refused to be tested for controlled substances.

(v) The date the driver was last tested for alcohol or controlled substances.

(vi) The results of any tests taken within the previous six months and any other violations of subpart B of this part.

(2) An employer who uses, but does not employ, a driver more than once a year to operate commercial motor vehicles must obtain the information in paragraph (d)(1) of this section at least once every six months. The records prepared under this paragraph shall be maintained in accordance with § 382.401. If the employer cannot verify that the driver is participating in a controlled substances testing program in accordance with this part and part 40, the employer shall conduct a pre-employment alcohol and/or controlled substances test.

(e) Nothwithstanding any other provisions of this subpart, all provisions and requirements in this section pertaining to pre-employment testing for alcohol are vacated as of May 1, 1995.

§ 382.303 Post-accident testing.

(a) As soon as practicable following an occurrence involving a commercial motor vehicle operating on a public road in commerce, each employer shall test for alcohol and controlled substances each surviving driver:

(1) Who was performing safety-sensitive functions with respect to the vehicle, if the accident involved the loss of human life; or

(2) Who receives a citation under State or local law for a moving traffic violation arising from the accident, if the accident involved:

(i) Bodily injury to any person who, as a result of the injury, immediately receives medical treatment away from the scene of the accident; or

(ii) One or more motor vehicles incurring disabling damage as a result of the accident, requiring the motor vehicle to be transported away from the scene by a tow truck or other motor vehicle.

(3) This table notes when a post-accident test is required to be conducted by

paragraphs (a)(1) and (a)(2) of this section.

TABLE FOR § 382.303(a)(3)

Type of accident involved	Citation issued to the CMV driver	Test must be performed by employer
Human fatality	YES	YES.
	NO	YES.
Bodily injury with immediate medical treatment away from the scene.	YES	YES.
	NO	NO.
Disabling damage to any motor vehicle requiring tow away.	YES	YES.
	NO	NO.

(b)(1) *Alcohol tests.* If a test required by this section is not administered within two hours following the accident, the employer shall prepare and maintain on file a record stating the reasons the test was not promptly administered. If a test required by this section is not administered within eight hours following the accident, the employer shall cease attempts to administer an alcohol test and shall prepare and maintain the same record. Records shall be submitted to the FHWA upon request of the Associate Administrator.

(2) For the years stated in this paragraph, employers who submit MIS reports shall submit to the FHWA each record of a test required by this section that is not completed within eight hours. The employer's records of tests that are not completed within eight hours shall be submitted to the FHWA by March 15, 1996; March 15, 1997, and March 15, 1998, for calendar years 1995, 1996, and 1997, respectively. Employers shall append these records to their MIS submissions. Each record shall include the following information:

(i) Type of test (reasonable suspicion/post-accident);

(ii) Triggering event (including date, time, and location);

(iii) Reason(s) test could not be completed within eight hours;

(iv) If blood alcohol testing could have been completed within eight hours, the name, address, and telephone number of the testing site where blood testing could have occurred; and

(3) Records of alcohol tests that could not be completed in eight hours shall be submitted to the FHWA at the following address: Attn: Alcohol Testing Program, Office of Motor Carrier Research and Standards (HCS–1), Federal Highway Administration, 400 Seventh Street, SW., Washington, DC 20590.

(4) Controlled substance tests. If a test required by this section is not administered within 32 hours following the accident, the employer shall cease attempts to administer a controlled substances test, and prepare and maintain on file a record stating the reasons the test was not promptly administered. Records shall be submitted to the FHWA upon request of the Associate Administrator.

(c) A driver who is subject to post-accident testing shall remain readily available for such testing or may be deemed by the employer to have refused to submit to testing. Nothing in this section shall be construed to require the delay of necessary medical attention for injured people following an accident or to prohibit a driver from leaving the scene of an accident for the period necessary to obtain assistance in responding to the accident, or to obtain necessary emergency medical care.

(d) An employer shall provide drivers with necessary post-accident information, procedures and instructions, prior to the driver operating a commercial motor vehicle, so that drivers will be able to comply with the requirements of this section.

(e)(1) The results of a breath or blood test for the use of alcohol, conducted by Federal, State, or local officials having independent authority for the test, shall be considered to meet the requirements of this section, provided such tests conform to the applicable Federal, State or local alcohol testing requirements, and that the results of the tests are obtained by the employer.

(2) The results of a urine test for the use of controlled substances, conducted by Federal, State, or local officials having independent authority for the test, shall be considered to meet the requirements of this section, provided such tests conform to the applicable Federal, State or local controlled substances testing requirements, and that the results of the tests are obtained by the employer.

(f) *Exception*. This section does not apply to:

(1) An occurrence involving only boarding or alighting from a stationary motor vehicle; or

(2) An occurrence involving only the loading or unloading of cargo; or

(3) An occurrence in the course of the operation of a passenger car or a multipurpose passenger vehicle (as defined in § 571.3 of this title) by an employer unless the motor vehicle is transporting passengers for hire or hazardous materials of a type and quantity that require the motor vehicle to be marked or placarded in accordance with § 177.823 of this title.

§ 382.305 Random testing.

(a) Every employer shall comply with the requirements of this section. Every driver shall submit to random alcohol and controlled substance testing as required in this section.

(b)(1) Except as provided in paragraphs (c) through (e) of this section, the minimum annual percentage rate for random alcohol testing shall be 25 percent of the average number of driver positions.

(2) Except as provided in paragraphs (f) through (h) of this section, the minimum annual percentage rate for random controlled substances testing shall be 50 percent of the average number of driver positions.

(c) The FHWA Administrator's decision to increase or decrease the minimum annual percentage rate for alcohol testing is based on the reported violation rate for the entire industry. All information used for this determination is drawn from the alcohol management information system reports required by § 382.403 of this part. In order to ensure reliability of the data, the FHWA Administrator considers the quality and completeness of the reported data, may obtain additional information or reports from employers, and may make appropriate modifications in calculating the industry violation rate. Each year, the FHWA Administrator will publish in the FEDERAL REGISTER the minimum annual percentage rate for random alcohol testing of drivers. The new minimum annual percentage rate for random alcohol testing will be applicable starting January 1 of the calendar year following publication.

(d)(1) When the minimum annual percentage rate for random alcohol testing is 25 percent or more, the FHWA Administrator may lower this rate to 10 percent of all driver positions if the FHWA Administrator determines that the data received under the reporting requirements of § 382.403 for two consecutive calendar years indicate that the violation rate is less than 0.5 percent.

(2) When the minimum annual percentage rate for random alcohol testing is 50 percent, the FHWA Administrator may lower this rate to 25 percent of all driver positions if the FHWA Administrator determines that the data received under the reporting requirements of § 382.403 for two consecutive calendar years indicate that the violation rate is less than 1.0 percent but equal to or greater than 0.5 percent.

(e)(1) When the minimum annual percentage rate for random alcohol testing is 10 percent, and the data received under the reporting requirements of § 382.403 for that calendar year indicate that the violation rate is equal to or greater than 0.5 percent, but less than 1.0 percent, the FHWA Administrator will increase the minimum annual percentage rate for random alcohol testing to 25 percent for all driver positions.

(2) When the minimum annual percentage rate for random alcohol testing is 25 percent or less, and the data received under the reporting requirements of § 382.403 for that calendar year indicate that the violation rate is equal to or greater than 1.0 percent, the FHWA Administrator will increase the minimum annual percentage rate for random alcohol testing to 50 percent for all driver positions.

(f) The FHWA Administrator's decision to increase or decrease the minimum annual percentage rate for controlled substances testing is based on the reported positive rate for the entire industry. All information used for this determination is drawn from the controlled substances management information system reports required by § 382.403 of this part. In order to ensure

reliability of the data, the FHWA Administrator considers the quality and completeness of the reported data, may obtain additional information or reports from employers, and may make appropriate modifications in calculating the industry positive rate. Each year, the FHWA Administrator will publish in the FEDERAL REGISTER the minimum annual percentage rate for random controlled substances testing of drivers. The new minimum annual percentage rate for random controlled substances testing will be applicable starting January 1 of the calendar year following publication.

(g) When the minimum annual percentage rate for random controlled substances testing is 50 percent, the FHWA Administrator may lower this rate to 25 percent of all driver positions if the FHWA Administrator determines that the data received under the reporting requirements of § 382.403 for two consecutive calendar years indicate that the positive rate is less than 1.0 percent. However, after the initial two years of random testing by large employers and the initial first year of testing by small employers under this section, the FHWA Administrator may lower the rate the following calendar year, if the combined positive testing rate is less than 1.0 percent, and if it would be in the interest of safety.

(h) When the minimum annual percentage rate for random controlled substances testing is 25 percent, and the data received under the reporting requirements of § 382.403 for any calendar year indicate that the reported positive rate is equal to or greater than 1.0 percent, the FHWA Administrator will increase the minimum annual percentage rate for random controlled substances testing to 50 percent of all driver positions.

(i) The selection of drivers for random alcohol and controlled substances testing shall be made by a scientifically valid method, such as a random number table or a computer-based random number generator that is matched with drivers' Social Security numbers, payroll identification numbers, or other comparable identifying numbers. Under the selection process used, each driver shall have an equal chance of being tested each time selections are made.

(j) The employer shall randomly select a sufficient number of drivers for testing during each calendar year to equal an annual rate not less than the minimum annual percentage rate for random alcohol and controlled substances testing determined by the FHWA Administrator. If the employer conducts random testing for alcohol and/or controlled substances through a consortium, the number of drivers to be tested may be calculated for each individual employer or may be based on the total number of drivers covered by the consortium who are subject to random alcohol and/or controlled substances testing at the same minimum annual percentage rate under this part or any DOT alcohol or controlled substances random testing rule.

(k) Each employer shall ensure that random alcohol and controlled substances tests conducted under this part are unannounced and that the dates for administering random alcohol and controlled substances tests are spread reasonably throughout the calendar year.

(l) Each employer shall require that each driver who is notified of selection for random alcohol and/or controlled substances testing proceeds to the test site immediately; provided, however, that if the driver is performing a safety-sensitive function, other than driving a commercial motor vehicle, at the time of notification, the employer shall instead ensure that the driver ceases to perform the safety-sensitive function and proceeds to the testing site as soon as possible.

(m) A driver shall only be tested for alcohol while the driver is performing safety-sensitive functions, just before the driver is to perform safety-sensitive functions, or just after the driver has ceased performing such functions.

(n) If a given driver is subject to random alcohol or controlled substances testing under the random alcohol or controlled substances testing rules of more than one DOT agency for the same employer, the driver shall be subject to random alcohol and/or controlled substances testing at the annual percentage rate established for the calendar year by the DOT agency

regulating more than 50 percent of the driver's function.

(o) If an employer is required to conduct random alcohol or controlled substances testing under the alcohol or controlled substances testing rules of more than one DOT agency, the employer may—

(1) Establish separate pools for random selection, with each pool containing the DOT-covered employees who are subject to testing at the same required minimum annual percentage rate; or

(2) Randomly select such employees for testing at the highest minimum annual percentage rate established for the calendar year by any DOT agency to which the employer is subject.

§ 382.307 Reasonable suspicion testing.

(a) An employer shall require a driver to submit to an alcohol test when the employer has reasonable suspicion to believe that the driver has violated the prohibitions of subpart B of this part concerning alcohol. The employer's determination that reasonable suspicion exists to require the driver to undergo an alcohol test must be based on specific, contemporaneous, articulable observations concerning the appearance, behavior, speech or body odors of the driver.

(b) An employer shall require a driver to submit to a controlled substances test when the employer has reasonable suspicion to believe that the driver has violated the prohibitions of subpart B of this part concerning controlled substances. The employer's determination that reasonable suspicion exists to require the driver to undergo a controlled substances test must be based on specific, contemporaneous, articulable observations concerning the appearance, behavior, speech or body odors of the driver. The observations may include indications of the chronic and withdrawal effects of controlled substances.

(c) The required observations for alcohol and/or controlled substances reasonable suspicion testing shall be made by a supervisor or company official who is trained in accordance with § 382.603 of this part. The person who makes the determination that reasonable suspicion exists to conduct an alcohol test shall not conduct the alcohol test of the driver.

(d) Alcohol testing is authorized by this section only if the observations required by paragraph (a) of this section are made during, just preceding, or just after the period of the work day that the driver is required to be in compliance with this part. A driver may be directed by the employer to only undergo reasonable suspicion testing while the driver is performing safety-sensitive functions, just before the driver is to perform safety-sensitive functions, or just after the driver has ceased performing such functions.

(e)(1) If an alcohol test required by this section is not administered within two hours following the determination under paragraph (a) of this section, the employer shall prepare and maintain on file a record stating the reasons the alcohol test was not promptly administered. If an alcohol test required by this section is not administered within eight hours following the determination under paragraph (a) of this section, the employer shall cease attempts to administer an alcohol test and shall state in the record the reasons for not administering the test.

(2) For the years stated in this paragraph, employers who submit MIS reports shall submit to the FHWA each record of a test required by this section that is not completed within 8 hours. The employer's records of tests that could not be completed within 8 hours shall be submitted to the FHWA by March 15, 1996; March 15, 1997; and March 15, 1998; for calendar years 1995, 1996, and 1997, respectively. Employers shall append these records to their MIS submissions. Each record shall include the following information:

(i) Type of test (reasonable suspicion/post-accident);

(ii) Triggering event (including date, time, and location);

(iii) Reason(s) test could not be completed within 8 hours; and

(iv) If blood alcohol testing could have been completed within eight hours, the name, address, and telephone number of the testing site where blood testing could have occurred.

(3) Records of tests that could not be completed in eight hours shall be submitted to the FHWA at the following

address: Attn.: Alcohol Testing program, Office of Motor Carrier Research and Standards (HCS–1), Federal Highway Administration, 400 Seventh Street, SW., Washington, DC 20590.

(4) Notwithstanding the absence of a reasonable suspicion alcohol test under this section, no driver shall report for duty or remain on duty requiring the performance of safety-sensitive functions while the driver is under the influence of or impaired by alcohol, as shown by the behavioral, speech, and performance indicators of alcohol misuse, nor shall an employer permit the driver to perform or continue to perform safety-sensitive functions, until:

(i) An alcohol test is administered and the driver's alcohol concentration measures less than 0.02; or

(ii) Twenty four hours have elapsed following the determination under paragraph (a) of this section that there is reasonable suspicion to believe that the driver has violated the prohibitions in this part concerning the use of alcohol.

(5) Except as provided in paragraph (e)(2) of this section, no employer shall take any action under this part against a driver based solely on the driver's behavior and appearance, with respect to alcohol use, in the absence of an alcohol test. This does not prohibit an employer with independent authority of this part from taking any action otherwise consistent with law.

(f) A written record shall be made of the observations leading to a controlled substance reasonable suspicion test, and signed by the supervisor or company official who made the observations, within 24 hours of the observed behavior or before the results of the controlled substances test are released, whichever is earlier.

§ 382.309 Return-to-duty testing.

(a) Each employer shall ensure that before a driver returns to duty requiring the performance of a safety-sensitive function after engaging in conduct prohibited by subpart B of this part concerning alcohol, the driver shall undergo a return-to-duty alcohol test with a result indicating an alcohol concentration of less than 0.02.

(b) Each employer shall ensure that before a driver returns to duty requiring the performance of a safety-sensitive function after engaging in conduct prohibited by subpart B of this part concerning controlled substances, the driver shall undergo a return-to-duty controlled substances test with a result indicating a verified negative result for controlled substances use.

§ 382.311 Follow-up testing.

(a) Following a determination under § 382.605(b) that a driver is in need of assistance in resolving problems associated with alcohol misuse and/or use of controlled substances, each employer shall ensure that the driver is subject to unannounced follow-up alcohol and/or controlled substances testing as directed by a substance abuse professional in accordance with the provisions of § 382.605(c)(2)(ii).

(b) Follow-up alcohol testing shall be conducted only when the driver is performing safety-sensitive functions, just before the driver is to perform safety-sensitive functions, or just after the driver has ceased performing safety-sensitive functions.

Subpart D—Handling Of Test Results, Record Retention, and Confidentiality

§ 382.401 Retention of records.

(a) *General requirement.* Each employer shall maintain records of its alcohol misuse and controlled substances use prevention programs as provided in this section. The records shall be maintained in a secure location with controlled access.

(b) *Period of retention.* Each employer shall maintain the records in accordance with the following schedule:

(1) *Five years.* The following records shall be maintained for a minimum of five years:

(i) Records of driver alcohol test results indicating an alcohol concentration of 0.02 or greater,

(ii) Records of driver verified positive controlled substances test results,

(iii) Documentation of refusals to take required alcohol and/or controlled substances tests,

(iv) Driver evaluation and referrals,

(v) Calibration documentation,

(vi) Records related to the administration of the alcohol and controlled substances testing programs, and

(vii) A copy of each annual calendar year summary required by § 382.403.

(2) *Two years.* Records related to the alcohol and controlled substances collection process (except calibration of evidential breath testing devices).

(3) *One year.* Records of negative and canceled controlled substances test results (as defined in part 40 of this title) and alcohol test results with a concentration of less than 0.02 shall be maintained for a minimum of one year.

(4) *Indefinite period.* Records related to the education and training of breath alcohol technicians, screening test technicians, supervisors, and drivers shall be maintained by the employer while the individual performs the functions which require the training and for two years after ceasing to perform those functions.

(c) *Types of records.* The following specific types of records shall be maintained. ''Documents generated'' are documents that may have to be prepared under a requirement of this part. If the record is required to be prepared, it must be maintained.

(1) Records related to the collection process:

(i) Collection logbooks, if used;

(ii) Documents relating to the random selection process;

(iii) Calibration documentation for evidential breath testing devices;

(iv) Documentation of breath alcohol technician training;

(v) Documents generated in connection with decisions to administer reasonable suspicion alcohol or controlled substances tests;

(vi) Documents generated in connection with decisions on post-accident tests;

(vii) Documents verifying existence of a medical explanation of the inability of a driver to provide adequate breath or to provide a urine specimen for testing; and

(viii) Consolidated annual calendar year summaries as required by § 382.403.

(2) Records related to a driver's test results:

(i) The employer's copy of the alcohol test form, including the results of the test;

(ii) The employer's copy of the controlled substances test chain of custody and control form;

(iii) Documents sent by the MRO to the employer, including those required by § 382.407(a).

(iv) Documents related to the refusal of any driver to submit to an alcohol or controlled substances test required by this part; and

(v) Documents presented by a driver to dispute the result of an alcohol or controlled substances test administered under this part.

(vi) Documents generated in connection with verifications of prior employers' alcohol or controlled substances test results that the employer:

(A) Must obtain in connection with the exception contained in § 382.301 of this part, and

(B) Must obtain as required by § 382.413 of this subpart.

(3) Records related to other violations of this part.

(4) Records related to evaluations:

(i) Records pertaining to a determination by a substance abuse professional concerning a driver's need for assistance; and

(ii) Records concerning a driver's compliance with recommendations of the substance abuse professional.

(5) Records related to education and training:

(i) Materials on alcohol misuse and controlled substance use awareness, including a copy of the employer's policy on alcohol misuse and controlled substance use;

(ii) Documentation of compliance with the requirements of § 382.601, including the driver's signed receipt of education materials;

(iii) Documentation of training provided to supervisors for the purpose of qualifying the supervisors to make a determination concerning the need for alcohol and/or controlled substances testing based on reasonable suspicion;

(iv) Documentation of training for breath alcohol technicians as required by § 40.51(a) of this title, and

(v) Certification that any training conducted under this part complies with the requirements for such training.

(6) Administrative records related to alcohol and controlled substances testing:

(i) Agreements with collection site facilities, laboratories, breath alcohol technicians, screening test technicians, medical review officers, consortia, and third party service providers;

(ii) Names and positions of officials and their role in the employer's alcohol and controlled substances testing program(s);

(iii) Quarterly laboratory statistical summaries of urinalysis required by § 40.29(g)(6) of this title; and

(iv) The employer's alcohol and controlled substances testing policy and procedures.

(d) *Location of records.* All records required by this part shall be maintained as required by § 390.31 of this subchapter and shall be made available for inspection at the employer's principal place of business within two business days after a request has been made by an authorized representative of the Federal Highway Administration.

(e)(1) OMB control number. The information collection requirements of this part have been reviewed by the Office of Management and Budget pursuant to the Paperwork Reduction Act of 1995 (44 U.S.C. 3501 *et seq.*) and have been assigned OMB control number 2125–0543.

(2) The information collection requirements of this part are found in the following sections: Section 382.105, 382.113, 382.301, 382.303, 382.305, 382.307, 382.309, 382.311, 382.401, 382.403, 382.405, 382.407, 382.409, 382.411, 382.413, 382.601, 382.603, 382.605.

[61 FR 9553, Mar. 8, 1996, as amended at 62 FR 37151, July 11, 1997]

§ 382.403 Reporting of results in a management information system.

(a) An employer shall prepare and maintain a summary of the results of its alcohol and controlled substances testing programs performed under this part during the previous calendar year, when requested by the Secretary of Transportation, any DOT agency, or any State or local officials with regulatory authority over the employer or any of its drivers.

(b) If an employer is notified, during the month of January, of a request by the Federal Highway Administration to report the employer's annual calendar year summary information, the employer shall prepare and submit the report to the Federal Highway Administration by March 15 of that year. The employer shall ensure that the annual summary report is accurate and received by March 15 at the location that the Federal Highway Administration specifies in its request. The report shall be in the form and manner prescribed by the Federal Highway Administration in its request. When the report is submitted to the Federal Highway Administration by mail or electronic transmission, the information requested shall be typed, except for the signature of the certifying official. Each employer shall ensure the accuracy and timeliness of each report submitted by the employer or a consortium.

(c) *Detailed summary.* Each annual calendar year summary that contains information on a verified positive controlled substances test result, an alcohol screening test result of 0.02 or greater, or any other violation of the alcohol misuse provisions of subpart B of this part shall include the following informational elements:

(1) Number of drivers subject to Part 382;

(2) Number of drivers subject to testing under the alcohol misuse or controlled substances use rules of more than one DOT agency, identified by each agency;

(3) Number of urine specimens collected by type of test (e.g., pre-employment, random, reasonable suspicion, post-accident);

(4) Number of positives verified by a MRO by type of test, and type of controlled substance;

(5) Number of negative controlled substance tests verified by a MRO by type of test;

(6) Number of persons denied a position as a driver following a pre-employment verified positive controlled substances test and/or a pre-employment alcohol test that indicates an alcohol concentration of 0.04 or greater;

(7) Number of drivers with tests verified positive by a medical review officer for multiple controlled substances;

(8) Number of drivers who refused to submit to an alcohol or controlled substances test required under this subpart;

(9)(i) Number of supervisors who have received required alcohol training during the reporting period; and

(ii) Number of supervisors who have received required controlled substances training during the reporting period;

(10)(i) Number of screening alcohol tests by type of test; and

(ii) Number of confirmation alcohol tests, by type of test;

(11) Number of confirmation alcohol tests indicating an alcohol concentration of 0.02 or greater but less than 0.04, by type of test;

(12) Number of confirmation alcohol tests indicating an alcohol concentration of 0.04 or greater, by type of test;

(13) Number of drivers who were returned to duty (having complied with the recommendations of a substance abuse professional as described in §§382.503 and 382.605), in this reporting period, who previously:

(i) Had a verified positive controlled substance test result, or

(ii) Engaged in prohibited alcohol misuse under the provisions of this part;

(14) Number of drivers who were administered alcohol and drug tests at the same time, with both a verified positive drug test result and an alcohol test result indicating an alcohol concentration of 0.04 or greater; and

(15) Number of drivers who were found to have violated any non-testing prohibitions of subpart B of this part, and any action taken in response to the violation.

(d) *Short summary.* Each employer's annual calendar year summary that contains only negative controlled substance test results, alcohol screening test results of less than 0.02, and does not contain any other violations of subpart B of this part, may prepare and submit, as required by paragraph (b) of this section, either a standard report form containing all the information elements specified in paragraph (c) of this section, or an ''EZ'' report form. The ''EZ'' report shall include the following information elements:

(1) Number of drivers subject to this Part 382;

(2) Number of drivers subject to testing under the alcohol misuse or controlled substance use rules of more than one DOT agency, identified by each agency;

(3) Number of urine specimens collected by type of test (e.g., pre-employment, random, reasonable suspicion, post-accident);

(4) Number of negatives verified by a medical review officer by type of test;

(5) Number of drivers who refused to submit to an alcohol or controlled substances test required under this subpart;

(6)(i) Number of supervisors who have received required alcohol training during the reporting period; and

(ii) Number of supervisors who have received required controlled substances training during the reporting period;

(7) Number of screen alcohol tests by type of test; and

(8) Number of drivers who were returned to duty (having complied with the recommendations of a substance abuse professional as described in §§382.503 and 382.605), in this reporting period, who previously:

(i) Had a verified positive controlled substance test result, or

(ii) Engaged in prohibited alcohol misuse under the provisions of this part.

(e) Each employer that is subject to more than one DOT agency alcohol or controlled substances rule shall identify each driver covered by the regulations of more than one DOT agency. The identification will be by the total number of covered functions. Prior to conducting any alcohol or controlled substances test on a driver subject to the rules of more than one DOT agency, the employer shall determine which DOT agency rule or rules authorizes or requires the test. The test result information shall be directed to the appropriate DOT agency or agencies.

(f) A consortium may prepare annual calendar year summaries and reports on behalf of individual employers for purposes of compliance with this section. However, each employer shall sign and submit such a report and shall remain responsible for ensuring the accuracy and timeliness of each report prepared on its behalf by a consortium.

§ 382.405 Access to facilities and records.

(a) Except as required by law or expressly authorized or required in this section, no employer shall release driver information that is contained in records required to be maintained under § 382.401.

(b) A driver is entitled, upon written request, to obtain copies of any records pertaining to the driver's use of alcohol or controlled substances, including any records pertaining to his or her alcohol or controlled substances tests. The employer shall promptly provide the records requested by the driver. Access to a driver's records shall not be contingent upon payment for records other than those specifically requested.

(c) Each employer shall permit access to all facilities utilized in complying with the requirements of this part to the Secretary of Transportation, any DOT agency, or any State or local officials with regulatory authority over the employer or any of its drivers.

(d) Each employer shall make available copies of all results for employer alcohol and/or controlled substances testing conducted under this part and any other information pertaining to the employer's alcohol misuse and/or controlled substances use prevention program, when requested by the Secretary of Transportation, any DOT agency, or any State or local officials with regulatory authority over the employer or any of its drivers.

(e) When requested by the National Transportation Safety Board as part of an accident investigation, employers shall disclose information related to the employer's administration of a post-accident alcohol and/or controlled substance test administered following the accident under investigation.

(f) Records shall be made available to a subsequent employer upon receipt of a written request from a driver. Disclosure by the subsequent employer is permitted only as expressly authorized by the terms of the driver's request.

(g) An employer may disclose information required to be maintained under this part pertaining to a driver, the decisionmaker in a lawsuit, grievance, or other proceeding initiated by or on behalf of the individual, and arising from the results of an alcohol and/or controlled substance test administered under this part, or from the employer's determination that the driver engaged in conduct prohibited by subpart B of this part (including, but not limited to, a worker's compensation, unemployment compensation, or other proceeding relating to a benefit sought by the driver.)

(h) An employer shall release information regarding a driver's records as directed by the specific, written consent of the driver authorizing release of the information to an identified person. Release of such information by the person receiving the information is permitted only in accordance with the terms of the employee's consent.

§ 382.407 Medical review officer notifications to the employer.

(a) The medical review officer may report to the employer using any communications device, but in all instances a signed, written notification must be forwarded within three business days of completion of the medical review officer's review, pursuant to part 40 of this title. A legible photocopy of the fourth copy of Part 40 Appendix A subtitled *COPY 4—SEND DIRECTLY TO MEDICAL REVIEW OFFICER—DO NOT SEND TO LABORATORY* of the *Federal Custody and Control Form OMB Number 9999–0023* may be used to make the signed, written notification to the employer for all test results (positive, negative, canceled, etc.), provided that the controlled substance(s) verified as positive, and the MRO's signature, shall be legibly noted in the remarks section of step 8 of the form completed by the medical review officer. The MRO must sign all verified positive test results. An MRO may sign or rubber stamp negative test results. An MRO's staff may rubber stamp negative test results under written authorization of the MRO. In no event shall an MRO, or his/her staff, use electronic signature technology to comply with this section. All reports, both oral and in writing, from the medical review officer to an employer shall clearly include:

(1) A statement that the controlled substances test being reported was in accordance with part 40 of this title

and this part, except for legible photocopies of Copy 4 of the Federal Custody and Control Form;

(2) The full name of the driver for whom the test results are being reported;

(3) The type of test indicated on the custody and control form (i.e. random, post-accident, follow-up);

(4) The date and location of the test collection;

(5) The identities of the persons or entities performing the collection, analyzing the specimens, and serving as the medical review officer for the specific test;

(6) The results of the controlled substances test, positive, negative, test canceled, or test not performed, and if positive, the identity of the controlled substance(s) for which the test was verified positive.

(b) A medical review officer shall report to the employer that the medical review officer has made all reasonable efforts to contact the driver as provided in § 40.33(c) of this title. The employer shall, as soon as practicable, request that the driver contact the medical review officer prior to dispatching the driver or within 24 hours, whichever is earlier.

§ 382.409 Medical review officer record retention for controlled substances.

(a) A medical review officer shall maintain all dated records and notifications, identified by individual, for a minimum of five years for verified positive controlled substances test results.

(b) A medical review officer shall maintain all dated records and notifications, identified by individual, for a minimum of one year for negative and canceled controlled substances test results.

(c) No person may obtain the individual controlled substances test results retained by a medical review officer, and no medical review officer shall release the individual controlled substances test results of any driver to any person, without first obtaining a specific, written authorization from the tested driver. Nothing in this paragraph shall prohibit a medical review officer from releasing, to the employer or to officials of the Secretary of Transportation, any DOT agency, or any State or local officials with regulatory authority over the controlled substances testing program under this part, the information delineated in § 382.407(a) of this subpart.

§ 382.411 Employer notifications.

(a) An employer shall notify a driver of the results of a pre-employment controlled substance test conducted under this part, if the driver requests such results within 60 calendar days of being notified of the disposition of the employment application. An employer shall notify a driver of the results of random, reasonable suspicion and post-accident tests for controlled substances conducted under this part if the test results are verified positive. The employer shall also inform the driver which controlled substance or substances were verified as positive.

(b) The designated management official shall make reasonable efforts to contact and request each driver who submitted a specimen under the employer's program, regardless of the driver's employment status, to contact and discuss the results of the controlled substances test with a medical review officer who has been unable to contact the driver.

(c) The designated management official shall immediately notify the medical review officer that the driver has been notified to contact the medical review officer within 24 hours.

§ 382.413 Inquiries for alcohol and controlled substances information from previous employers.

(a)(1) An employer shall, pursuant to the driver's written authorization, inquire about the following information on a driver from the driver's previous employers, during the preceding two years from the date of application, which are maintained by the driver's previous employers under § 382.401(b)(1)(i) through (iii) of this subpart:

(i) Alcohol tests with a result of 0.04 alcohol concentration or greater;

(ii) Verified positive controlled substances test results; and

(iii) Refusals to be tested.

(2) The information obtained from a previous employer may contain any alcohol and drug information the previous employer obtained from other previous employers under paragraph (a)(1) of this section.

(b) If feasible, the information in paragraph (a) of this section must be obtained and reviewed by the employer prior to the first time a driver performs safety-sensitive functions for the employer. If not feasible, the information must be obtained and reviewed as soon as possible, but no later than 14-calendar days after the first time a driver performs safety-sensitive functions for the employer. An employer may not permit a driver to perform safety-sensitive functions after 14 days without having made a good faith effort to obtain the information as soon as possible. If a driver hired or used by the employer ceases performing safety-sensitive functions for the employer before expiration of the 14-day period or before the employer has obtained the information in paragraph (a) of this section, the employer must still make a good faith effort to obtain the information.

(c) An employer must maintain a written, confidential record of the information obtained under paragraph (a) or (f) of this section. If, after making a good faith effort, an employer is unable to obtain the information from a previous employer, a record must be made of the efforts to obtain the information and retained in the driver's qualification file.

(d) The prospective employer must provide to each of the driver's previous employers the driver's specific, written authorization for release of the information in paragraph (a) of this section.

(e) The release of any information under this section may take the form of personal interviews, telephone interviews, letters, or any other method of transmitting information that ensures confidentiality.

(f) The information in paragraph (a) of this section may be provided directly to the prospective employer by the driver, provided the employer assures itself that the information is true and accurate.

(g) An employer may not use a driver to perform safety-sensitive functions if the employer obtains information on a violation of the prohibitions in subpart B of this part by the driver, without obtaining information on subsequent compliance with the referral and rehabilitation requirements of § 382.605 of this part.

(h) Employers need not obtain information under paragraph (a) of this section generated by previous employers prior to the starting dates in § 382.115 of this part.

Subpart E—Consequences for Drivers Engaging in Substance Use-Related Conduct

§ 382.501 Removal from safety-sensitive function.

(a) Except as provided in subpart F of this part, no driver shall perform safety-sensitive functions, including driving a commercial motor vehicle, if the driver has engaged in conduct prohibited by subpart B of this part or an alcohol or controlled substances rule of another DOT agency.

(b) No employer shall permit any driver to perform safety-sensitive functions, including driving a commercial motor vehicle, if the employer has determined that the driver has violated this section.

(c) For purposes of this subpart, commercial motor vehicle means a commercial motor vehicle in commerce as defined in § 382.107, and a commercial motor vehicle in interstate commerce as defined in Part 390 of this subchapter.

§ 382.503 Required evaluation and testing.

No driver who has engaged in conduct prohibited by subpart B of this part shall perform safety-sensitive functions, including driving a commercial motor vehicle, unless the driver has met the requirements of § 382.605. No employer shall permit a driver who has engaged in conduct prohibited by subpart B of this part to perform safety-sensitive functions, including driving a commercial motor vehicle, unless the driver has met the requirements of § 382.605.

§ 382.505 Other alcohol-related conduct.

(a) No driver tested under the provisions of subpart C of this part who is found to have an alcohol concentration of 0.02 or greater but less than 0.04 shall perform or continue to perform safety-sensitive functions for an employer, including driving a commercial motor vehicle, nor shall an employer permit the driver to perform or continue to perform safety-sensitive functions, until the start of the driver's next regularly scheduled duty period, but not less than 24 hours following administration of the test.

(b) Except as provided in paragraph (a) of this section, no employer shall take any action under this part against a driver based solely on test results showing an alcohol concentration less than 0.04. This does not prohibit an employer with authority independent of this part from taking any action otherwise consistent with law.

§ 382.507 Penalties.

Any employer or driver who violates the requirements of this part shall be subject to the penalty provisions of 49 U.S.C. section 521(b).

Subpart F—Alcohol Misuse and Controlled Substances Use Information, Training, and Referral

§ 382.601 Employer obligation to promulgate a policy on the misuse of alcohol and use of controlled substances.

(a) *General requirements.* Each employer shall provide educational materials that explain the requirements of this part and the employer's policies and procedures with respect to meeting these requirements.

(1) The employer shall ensure that a copy of these materials is distributed to each driver prior to the start of alcohol and controlled substances testing under this part and to each driver subsequently hired or transferred into a position requiring driving a commercial motor vehicle.

(2) Each employer shall provide written notice to representatives of employee organizations of the availability of this information.

(b) *Required content.* The materials to be made available to drivers shall include detailed discussion of at least the following:

(1) The identity of the person designated by the employer to answer driver questions about the materials;

(2) The categories of drivers who are subject to the provisions of this part;

(3) Sufficient information about the safety-sensitive functions performed by those drivers to make clear what period of the work day the driver is required to be in compliance with this part;

(4) Specific information concerning driver conduct that is prohibited by this part;

(5) The circumstances under which a driver will be tested for alcohol and/or controlled substances under this part, including post-accident testing under § 382.303(d);

(6) The procedures that will be used to test for the presence of alcohol and controlled substances, protect the driver and the integrity of the testing processes, safeguard the validity of the test results, and ensure that those results are attributed to the correct driver, including post-accident information, procedures and instructions required by § 382.303(d) of this part;

(7) The requirement that a driver submit to alcohol and controlled substances tests administered in accordance with this part;

(8) An explanation of what constitutes a refusal to submit to an alcohol or controlled substances test and the attendant consequences;

(9) The consequences for drivers found to have violated subpart B of this part, including the requirement that the driver be removed immediately from safety-sensitive functions, and the procedures under § 382.605;

(10) The consequences for drivers found to have an alcohol concentration of 0.02 or greater but less than 0.04;

(11) Information concerning the effects of alcohol and controlled substances use on an individual's health, work, and personal life; signs and symptoms of an alcohol or a controlled substances problem (the driver's or a coworker's); and available methods of

intervening when an alcohol or a controlled substances problem is suspected, including confrontation, referral to any employee assistance program and or referral to management.

(c) *Optional provision.* The materials supplied to drivers may also include information on additional employer policies with respect to the use of alcohol or controlled substances, including any consequences for a driver found to have a specified alcohol or controlled substances level, that are based on the employer's authority independent of this part. Any such additional policies or consequences must be clearly and obviously described as being based on independent authority.

(d) *Certificate of receipt.* Each employer shall ensure that each driver is required to sign a statement certifying that he or she has received a copy of these materials described in this section. Each employer shall maintain the original of the signed certificate and may provide a copy of the certificate to the driver.

§ 382.603 Training for supervisors.

Each employer shall ensure that all persons designated to supervise drivers receive at least 60 minutes of training on alcohol misuse and receive at least an additional 60 minutes of training on controlled substances use. The training will be used by the supervisors to determine whether reasonable suspicion exists to require a driver to undergo testing under § 382.307. The training shall include the physical, behavioral, speech, and performance indicators of probable alcohol misuse and use of controlled substances.

§ 382.605 Referral, evaluation, and treatment.

(a) Each driver who has engaged in conduct prohibited by subpart B of this part shall be advised by the employer of the resources available to the driver in evaluating and resolving problems associated with the misuse of alcohol and use of controlled substances, including the names, addresses, and telephone numbers of substance abuse professionals and counseling and treatment programs.

(b) Each driver who engages in conduct prohibited by subpart B of this part shall be evaluated by a substance abuse professional who shall determine what assistance, if any, the employee needs in resolving problems associated with alcohol misuse and controlled substances use.

(c)(1) Before a driver returns to duty requiring the performance of a safety-sensitive function after engaging in conduct prohibited by subpart B of this part, the driver shall undergo a return-to-duty alcohol test with a result indicating an alcohol concentration of less than 0.02 if the conduct involved alcohol, or a controlled substances test with a verified negative result if the conduct involved a controlled substance.

(2) In addition, each driver identified as needing assistance in resolving problems associated with alcohol misuse or controlled substances use,

(i) Shall be evaluated by a substance abuse professional to determine that the driver has properly followed any rehabilitation program prescribed under paragraph (b) of this section, and

(ii) Shall be subject to unannounced follow-up alcohol and controlled substances tests administered by the employer following the driver's return to duty. The number and frequency of such follow-up testing shall be as directed by the substance abuse professional, and consist of at least six tests in the first 12 months following the driver's return to duty. The employer may direct the driver to undergo return-to-duty and follow-up testing for both alcohol and controlled substances, if the substance abuse professional determines that return-to-duty and follow-up testing for both alcohol and controlled substances is necessary for that particular driver. Any such testing shall be performed in accordance with the requirements of 49 CFR part 40. Follow-up testing shall not exceed 60 months from the date of the driver's return to duty. The substance abuse professional may terminate the requirement for follow-up testing at any time after the first six tests have been administered, if the substance abuse professional determines that such testing is no longer necessary.

(d) Evaluation and rehabilitation may be provided by the employer, by a substance abuse professional under

contract with the employer, or by a substance abuse professional not affiliated with the employer. The choice of substance abuse professional and assignment of costs shall be made in accordance with employer/driver agreements and employer policies.

(e) The employer shall ensure that a substance abuse professional who determines that a driver requires assistance in resolving problems with alcohol misuse or controlled substances use does not refer the driver to the substance abuse professional's private practice or to a person or organization from which the substance abuse professional receives remuneration or in which the substance abuse professional has a financial interest. This paragraph does not prohibit a substance abuse professional from referring a driver for assistance provided through—

(1) A public agency, such as a State, county, or municipality;

(2) The employer or a person under contract to provide treatment for alcohol or controlled substance problems on behalf of the employer;

(3) The sole source of therapeutically appropriate treatment under the driver's health insurance program; or

(4) The sole source of therapeutically appropriate treatment reasonably accessible to the driver.

(f) The requirements of this section with respect to referral, evaluation and rehabilitation do not apply to applicants who refuse to submit to a pre-employment alcohol or controlled substances test or who have a pre-employment alcohol test with a result indicating an alcohol concentration of 0.04 or greater or a controlled substances test with a verified positive test result.

PART 383—COMMERCIAL DRIVER'S LICENSE STANDARDS; REQUIREMENTS AND PENALTIES

Subpart A—General

Sec.
383.1 Purpose and scope.
383.3 Applicability.
383.5 Definitions.
383.7 Waiver provisions.

Subpart B—Single License Requirement

383.21 Number of drivers' licenses.
383.23 Commercial driver's license.

Subpart C—Notification Requirements and Employer Responsibilities

383.31 Notification of convictions for driver violations.
383.33 Notification of driver's license suspensions.
383.35 Notification of previous employment.
383.37 Employer responsibilities.

Subpart D—Driver Disqualifications and Penalties

383.51 Disqualification of drivers.
383.53 Penalties.

Subpart E—Testing and Licensing Procedures

383.71 Driver application procedures.
383.72 Implied consent to alcohol testing.
383.73 State procedures.
383.75 Third party testing.
383.77 Substitute for driving skills tests.

Subpart F—Vehicle Groups and Endorsements

383.91 Commercial motor vehicle groups.
383.93 Endorsements.
383.95 Air brake restrictions.

Subpart G—Required Knowledge and Skills

383.110 General requirement.
383.111 Required knowledge.
383.113 Required skills.
383.115 Requirements for double/triple trailers endorsement.
383.117 Requirements for passenger endorsement.
383.119 Requirements for tank vehicle endorsement.
383.121 Requirements for hazardous materials endorsement.

APPENDIX TO SUBPART G—REQUIRED KNOWLEDGE AND SKILLS—SAMPLE GUIDELINES

Subpart H—Tests

383.131 Test procedures.
383.133 Testing methods.
383.135 Minimum passing scores.

Subpart I [Reserved]

Subpart J—Commercial Driver's License Document

383.151 General.
383.153 Information on the document and application.
383.155 Tamperproofing requirements.

AUTHORITY: 49 U.S.C. 31136, 31301 *et seq.*, and 31502; and 49 CFR 1.48.

SOURCE: 52 FR 20587, June 1, 1987, unless otherwise noted.

Subpart A—General

§ 383.1 Purpose and scope.

(a) The purpose of this part is to help reduce or prevent truck and bus accidents, fatalities, and injuries by requiring drivers to have a single commercial motor vehicle driver's license and by disqualifying drivers who operate commercial motor vehicles in an unsafe manner.

(b) This part:

(1) Prohibits a commercial motor vehicle driver from having more than one commercial motor vehicle driver's license;

(2) Requires a driver to notify the driver's current employer and the driver's State of domicile of certain convictions;

(3) Requires that a driver provide previous employment information when applying for employment as an operator of a commercial motor vehicle;

(4) Prohibits an employer from allowing a person with a suspended license to operate a commercial motor vehicle;

(5) Establishes periods of disqualification and penalties for those persons convicted of certain criminal and other offenses and serious traffic violations, or subject to any suspensions, revocations, or cancellations of certain driving privileges;

(6) Establishes testing and licensing requirements for commercial motor vehicle operators;

(7) Requires States to give knowledge and skills tests to all qualified applicants for commercial drivers' licenses which meet the Federal standard;

(8) Sets forth commercial motor vehicle groups and endorsements;

(9) Sets forth the knowledge and skills test requirements for the motor vehicle groups and endorsements;

(10) Sets forth the Federal standards for procedures, methods, and minimum passing scores for States and others to use in testing and licensing commercial motor vehicle operators; and

(11) Establishes requirements for the State issued commercial license documentation.

[52 FR 20587, June 1, 1987, as amended at 53 FR 27648, July 21, 1988; 54 FR 40787, Oct. 3, 1989]

§ 383.3 Applicability.

(a) The rules in this part apply to every person who operates a commercial motor vehicle (CMV) in interstate, foreign, or intrastate commerce, to all employers of such persons, and to all States.

(b) The exceptions contained in §390.3(f) of this subchapter do not apply to this part. The employers and drivers identified in §390.3(f) must comply with the requirements of this part, unless otherwise provided in this section.

(c) *Exception for certain military drivers.* Each State must exempt from the requirements of this part individuals who operate CMVs for military purposes. This exception is applicable to active duty military personnel; members of the military reserves; member of the national guard on active duty, including personnel on full-time national guard duty, personnel on part-time national guard training, and national guard military technicians (civilians who are required to wear military uniforms); and active duty U.S. Coast Guard personnel. This exception is not applicable to U.S. Reserve technicians.

(d) *Exception for farmers, firefighters, emergency response vehicle drivers, and drivers removing snow and ice.* A State may, at its discretion, exempt individuals identified in paragraphs (d)(1), (d)(2), and (d)(3) of this section from the requirements of this part. The use of this waiver is limited to the driver's home State unless there is a reciprocity agreement with adjoining States.

(1) Operators of a farm vehicle which is:

(i) Controlled and operated by a farmer, including operation by employees or family members;

(ii) Used to transport either agricultural products, farm machinery, farm supplies, or both to or from a farm;

(iii) Not used in the operations of a common or contract motor carrier; and

(iv) Used within 241 kilometers (150 miles) of the farmer's farm.

(2) Firefighters and other persons who operate CMVs which are necessary to the preservation of life or property or the execution of emergency governmental functions, are equipped with audible and visual signals and are not subject to normal traffic regulation. These vehicles include fire trucks, hook and ladder trucks, foam or water transport trucks, police SWAT team vehicles, ambulances, or other vehicles that are used in response to emergencies.

(3)(i) A driver, employed by an eligible unit of local government, operating a commercial motor vehicle within the boundaries of that unit for the purpose of removing snow or ice from a roadway by plowing, sanding, or salting, if

(A) The properly licensed employee who ordinarily operates a commercial motor vehicle for these purposes is unable to operate the vehicle; or

(B) The employing governmental entity determines that a snow or ice emergency exists that requires additional assistance.

(ii) This exemption shall not preempt State laws and regulations concerning the safe operation of commercial motor vehicles.

(e) *Restricted commercial drivers license (CDL) for certain drivers in the State of Alaska.* (1) The State of Alaska may, at its discretion, waive only the following requirements of this part and issue a CDL to each driver that meets the conditions set forth in paragraphs (e) (2) and (3) of this section:

(i) The knowledge tests standards for testing procedures and methods of subpart H, but must continue to administer knowledge tests that fulfill the content requirements of subpart G for *all* applicants;

(ii) All the skills test requirements; and

(iii) The requirement under § 383.153(a)(4) to have a photograph on the license document.

(2) Drivers of CMVs in the State of Alaska must operate exclusively over roads that meet *both* of the following criteria to be eligible for the exception in paragraph (e)(1) of this section:

(i) Such roads are not connected by land highway or vehicular way to the land-connected State highway system; and

(ii) Such roads are not connected to any highway or vehicular way with an average daily traffic volume greater than 499.

(3) Any CDL issued under the terms of this paragraph must carry two restrictions:

(i) Holders may not operate CMVs over roads other than those specified in paragraph (e)(2) of this section; and

(ii) The license is not valid for CMV operation outside the State of Alaska.

(f) *Restricted CDL for certain drivers in farm-related service industries.* (1) A State may, at its discretion, waive the required knowledge and skills tests of subpart H of this part and issue restricted CDLs to employees of these designated farm-related service industries:

(i) Agri-chemical businesses;

(ii) Custom harvesters;

(iii) Farm retail outlets and suppliers;

(iv) Livestock feeders.

(2) A restricted CDL issued pursuant to this paragraph shall meet all the requirements of this part, except subpart H of this part. A restricted CDL issued pursuant to this paragraph shall be accorded the same reciprocity as a CDL meeting all of the requirements of this part. The restrictions imposed upon the issuance of this restricted CDL shall not limit a person's use of the CDL in a non-CMV during either validated or non-validated periods, nor shall the CDL affect a State's power to administer its driver licensing program for operators of vehicles other than CMVs.

(3) A State issuing a CDL under the terms of this paragraph must restrict issuance as follows:

(i) Applicants must have a good driving record as defined in this paragraph. Drivers who have not held any motor vehicle operator's license for at least one year shall not be eligible for this CDL. Drivers who have between one and two years of driving experience must demonstrate a good driving record for their entire driving history. Drivers with more than two years of driving experience must have a good driving record for the two most recent

years. For the purposes of this paragraph, the term *good driving record* means that an applicant:

(A) Has not had more than one license (except in the instances specified in § 383.21(b));

(B) Has not had *any* license suspended, revoked, or canceled;

(C) Has not had *any* conviction for any type of motor vehicle for the disqualifying offenses contained in § 383.51(b)(2);

(D) Has not had *any* conviction for any type of motor vehicle for serious traffic violations; and

(E) Has not had *any* conviction for a violation of State or local law relating to motor vehicle traffic control (other than a parking violation) arising in connection with any traffic accident, and has no record of an accident in which he/she was at fault.

(ii) Restricted CDLs shall have the same renewal cycle as unrestricted CDLs, but shall be limited to the seasonal period or periods as defined by the State of licensure, provided that the total number of calendar days in any 12-month period for which the restricted CDL is valid does not exceed 180. If a State elects to provide for more than one seasonal period, the restricted CDL is valid for commercial motor vehicle operation only during the currently approved season, and must be revalidated for each successive season. Only one seasonal period of validity may appear on the license document at a time. The good driving record must be confirmed prior to any renewal or revalidation.

(iii) Restricted CDL holders are limited to operating Group B and C vehicles, as described in subpart F of this part.

(iv) Restricted CDLs shall not be issued with *any* endorsements on the license document. Only the limited tank vehicle and hazardous materials endorsement privileges that the restricted CDL automatically confers and are described in paragraph (f)(3)(v) of this section are permitted.

(v) Restricted CDL holders may not drive vehicles carrying any placardable quantities of hazardous materials, except for diesel fuel in quantities of 3,785 liters (1,000 gallons) or less; liquid fertilizers (i.e., plant nutrients) in vehicles or implements of husbandry in total quantities of 11,355 liters (3,000 gallons) or less; and solid fertilizers (i.e., solid plant nutrients) that are not transported with any organic substance.

(vi) Restricted CDL holders may not hold an unrestricted CDL at the same time.

(vii) Restricted CDL holders may not operate a commercial motor vehicle beyond 241 kilometers (150 miles) from the place of business or the farm currently being served.

(g) *Restricted CDL for certain drivers in the pyrotechnic industry.* (1) A State may, at its discretion, waive the required hazardous materials knowledge tests of subpart H of this part and issue restricted CDLs to part-time drivers operating commercial motor vehicles transporting less than 227 kilograms (500 pounds) of fireworks classified as DOT Class 1.3G explosives.

(2) A State issuing a CDL under the terms of this paragraph must restrict issuance as follows:

(i) The GVWR of the vehicle to be operated must be less than 4,537 kilograms (10,001 pounds);

(ii) If a State believes, at its discretion, that the training required by § 172.704 of this title adequately prepares part-time drivers meeting the other requirements of this paragraph to deal with fireworks and the other potential dangers posed by fireworks transportation and use, the State may waive the hazardous materials knowledge tests of subpart H of this part. The State may impose any requirements it believes is necessary to ensure itself that a driver is properly trained pursuant to § 172.704 of this title.

(iii) A restricted CDL document issued pursuant to this paragraph shall have a statement clearly imprinted on the face of the document that is substantially similar as follows: ''For use as a CDL only during the period from June 30 through July 6 for purposes of transporting less than 227 kilograms (500 pounds) of fireworks classified as DOT Class 1.3G explosives in a vehicle with a GVWR of less than 4,537 kilograms (10,001 pounds).

(3) A restricted CDL issued pursuant to this paragraph shall meet all the requirements of this part, except those

specifically identified. A restricted CDL issued pursuant to this paragraph shall be accorded the same reciprocity as a CDL meeting all of the requirements of this part. The restrictions imposed upon the issuance of this restricted CDL shall not limit a person's use of the CDL in a non-CMV during either validated or non-validated periods, nor shall the CDL affect a State's power to administer its driver licensing program for operators of vehicles other than CMVs.

(4) Restricted CDLs shall have the same renewal cycle as unrestricted CDLs, but shall be limited to the seasonal period of June 30 through July 6 of each year or a lesser period as defined by the State of licensure.

(5) Persons who operate commercial motor vehicles during the period from July 7 through June 29 for purposes of transporting less than 227 kilograms (500 pounds) of fireworks classified as DOT Class 1.3G explosives in a vehicle with a GVWR of less than 4,537 kilograms (10,001 pounds) and who also operate such vehicles for the same purposes during the period June 30 through July 6 shall not be issued a restricted CDL pursuant to this paragraph.

[61 FR 9564, Mar. 8, 1996, as amended at 61 FR 14679, Apr. 3, 1996; 62 FR 1296, Jan. 9, 1997]

§ 383.5 Definitions.

As used in this part:

Administrator means the Federal Highway Administrator, the chief executive of the Federal Highway Administration, an agency within the Department of Transportation.

Alcohol or *alcoholic beverage* means: (a) Beer as defined in 26 U.S.C. 5052(a), of the Internal Revenue Code of 1954, (b) wine of not less than one-half of one per centum of alcohol by volume, or (c) distilled spirits as defined in section 5002(a)(8), of such Code.

Alcohol concentration (AC) means the concentration of alcohol in a person's blood or breath. When expressed as a percentage it means grams of alcohol per 100 milliliters of blood or grams of alcohol per 210 liters of breath.

Commerce means (a) any trade, traffic or transportation within the jurisdiction of the United States between a place in a State and a place outside of such State, including a place outside of the United States and (b) trade, traffic, and transportation in the United States which affects any trade, traffic, and transportation described in paragraph (a) of this definition.

Commercial driver's license (CDL) means a license issued by a State or other jurisdiction, in accordance with the standards contained in 49 CFR part 383, to an individual which authorizes the individual to operate a class of a commercial motor vehicle.

Commercial driver's license information system (CDLIS) means the CDLIS established by FHWA pursuant to section 12007 of the Commercial Motor Vehicle Safety Act of 1986.

Commercial motor vehicle (CMV) means a motor vehicle or combination of motor vehicles used in commerce to transport passengers or property if the motor vehicle—

(a) Has a gross combination weight rating of 11,794 kilograms or more (26,001 pounds or more) inclusive of a towed unit with a gross vehicle weight rating of more than 4,536 kilograms (10,000 pounds); or

(b) Has a gross vehicle weight rating of 11,794 or more kilograms (26,001 pounds or more); or

(c) Is designed to transport 16 or more passengers, including the driver; or

(d) Is of any size and is used in the transportation of materials found to be hazardous for the purposes of the Hazardous Materials Transportation Act and which require the motor vehicle to be placarded under the Hazardous Materials Regulations (49 CFR part 172, subpart F).

Controlled substance has the meaning such term has under 21 U.S.C. 802(6) and includes all substances listed on schedules I through V of 21 CFR 1308 (§§ 1308.11 through 1308.15), as they may be amended by the United States Department of Justice.

Conviction means an unvacated adjudication of guilt, or a determination that a person has violated or failed to comply with the law in a court of original jurisdiction or by an authorized administrative tribunal, an unvacated forfeiture of bail or collateral deposited to secure the person's appearance in court, a plea of guilty or nolo

contendere accepted by the court, the payment of a fine or court cost, or violation of a condition of release without bail, regardless of whether or not the penalty is rebated, suspended, or probated.''

Disqualification means either:

(a) The suspension, revocation, cancellation, or any other withdrawal by a State of a person's privileges to drive a commercial motor vehicle; or

(b) A determination by the FHWA, under the rules of practice for motor carrier safety contained in part 386 of this title, that a person is no longer qualified to operate a commercial motor vehicle under part 391; or

(c) The loss of qualification which automatically follows conviction of an offense listed in § 383.51.

Driver applicant means an individual who applies to a State to obtain, transfer, upgrade, or renew a CDL.

Driver's license means a license issued by a State or other jurisdiction, to an individual which authorizes the individual to operate a motor vehicle on the highways.

Driving a commercial motor vehicle while under the influence of alcohol means committing any one or more of the following acts in a CMV: driving a CMV while the person's alcohol concentration is 0.04 percent or more; driving under the influence of alcohol, as prescribed by State law; or refusal to undergo such testing as is required by any State or jurisdiction in the enforcement of § 383.51(b)(2)(i)(A) or (B), or § 392.5(a)(2).

Eligible unit of local government means a city, town, borough, county, parish, district, or other public body created by or pursuant to State law which has a total population of 3,000 individuals or less.

Employee means any operator of a commercial motor vehicle, including full time, regularly employed drivers; casual, intermittent or occasional drivers; leased drivers and independent, owner-operator contractors (while in the course of operating a commercial motor vehicle) who are either directly employed by or under lease to an employer.

Employer means any person (including the United States, a State, District of Columbia or a political subdivision of a State) who owns or leases a commercial motor vehicle or assigns employees to operate such a vehicle.

Endorsement means an authorization to an individual's CDL required to permit the individual to operate certain types of commercial motor vehicles.

Felony means an offense under State or Federal law that is punishable by death or imprisonment for a term exceeding 1 year.

Foreign means outside the fifty United States and the District of Columbia.

Gross combination weight rating (GCWR) means the value specified by the manufacturer as the loaded weight of a combination (articulated) vehicle. In the absence of a value specified by the manufacturer, GCWR will be determined by adding the GVWR of the power unit and the total weight of the towed unit and any load thereon.

Gross vehicle weight rating (GVWR) means the value specified by the manufacturer as the loaded weight of a single vehicle.

Hazardous materials has the meaning such term has under section 103 of the Hazardous Materials Transportation Act.

Motor vehicle means a vehicle, machine, tractor, trailer, or semitrailer propelled or drawn by mechanical power used on highways, except that such term does not include a vehicle, machine, tractor, trailer, semitrailer operated exclusively on a rail.

Nonresident CDL means a CDL issued by a State to an individual domiciled in a foreign country.

Out-of-service order means a declaration by an authorized enforcement officer of a Federal, State, Canadian, Mexican, or local jurisdiction that a driver, a commercial motor vehicle, or a motor carrier operation, is out-of-service pursuant to §§ 386.72, 392.5, 395.13, 396.9, or compatible laws, or the North American Uniform Out-of-Service Criteria.

Representative vehicle means a motor vehicle which represents the type of motor vehicle that a driver applicant operates or expects to operate.

Serious traffic violation means conviction, when operating a commercial motor vehicle, of:

(a) Excessive speeding, involving any single offense for any speed of 15 miles

per hour or more above the posted speed limit;

(b) Reckless driving, as defined by State or local law or regulation, including but not limited to offenses of driving a commercial motor vehicle in willful or wanton disregard for the safety of persons or property;

(c) Improper or erratic traffic lane changes;

(d) Following the vehicle ahead too closely; or

(e) A violation, arising in connection with a fatal accident, of State or local law relating to motor vehicle traffic control (other than a parking violation). (Serious traffic violations exclude vehicle weight and defect violations.)

State means a State of the United States and the District of Columbia.

State of domicile means that State where a person has his/her true, fixed, and permanent home and principal residence and to which he/she has the intention of returning whenever he/she is absent.

Tank vehicle means any commercial motor vehicle that is designed to transport any liquid or gaseous materials within a tank that is either permanently or temporarily attached to the vehicle or the chassis. Such vehicles include, but are not limited to, cargo tanks and portable tanks, as defined in part 171 of this title. However, this definition does not include portable tanks having a rated capacity under 1,000 gallons.

United States the term United States means the 50 States and the District of Columbia.

Vehicle means a motor vehicle unless otherwise specified.

Vehicle group means a class or type of vehicle with certain operating characteristics.

[52 FR 20587, June 1, 1987, as amended at 53 FR 27648, July 21, 1988; 53 FR 39050, Oct. 4, 1988; 54 FR 40787, Oct. 3, 1989; 59 FR 26028, May 18, 1994; 61 FR 9566, Mar. 8, 1996; 61 FR 14679, Apr. 3, 1996; 62 FR 37151, July 11, 1997]

§ 383.7 Waiver provisions.

(a) Any person subject to a requirement of this part may petition the Administrator for a waiver of compliance by a class of persons or a class of commercial motor vehicles with such requirement.

(b) Each petition for a waiver under this section shall be made in writing, preferably in triplicate, and shall:

(1) Include the name and complete address of petitioner;

(2) Identify the requirement the petitioner wants waived and any information in support of the request;

(3) Identify the class of persons or class of commercial motor vehicle for which the waiver is sought.

(4) Identify the type of operation addressed in the petition.

(5) Indicate what benefit would be derived from the issuance of a waiver.

(6) Indicate why the petition, if granted, would not diminish the safe operation of commercial motor vehicles.

(7) Include any other pertinent material the Administrator may require.

(c) If the Administrator determines that the petition is without merit, the Administrator may deny the petition. Notice of the denial, with the reasons therefor, will be provided to the petitioner in writing.

(d) If the Administrator determines that the petition may have merit, notice of the petition will be published in the FEDERAL REGISTER, and interested persons will be afforded an opportunity to comment thereon. After such notice and opportunity for comment, the Administrator may grant or deny the petition. Notice of the disposition of the petition, with the reasons therefor, will be published in the FEDERAL REGISTER.

Subpart B—Single License Requirement

§ 383.21 Number of drivers' licenses.

(a) No person who operates a commercial motor vehicle shall at any time have more than one driver's license.

(b) *Exception:*

(1) During the 10-day period beginning on the date such person is issued a driver's license, a person may hold more than one driver's license.

(2) A person may have more than one driver's license if a State law enacted before June 1, 1986, required the person to have more than one driver's license.

After December 31, 1989, this exception shall not apply.

§ 383.23 Commercial driver's license.

(a) *General rule.* (1) Effective April 1, 1992, no person shall operate a commercial motor vehicle unless such person has taken and passed written and driving tests which meet the Federal standards contained in subparts F, G, and H of this part for the commercial motor vehicle that person operates or expects to operate.

(2) Effective April 1, 1992, except as provided in paragraph (b) of this section, no person shall operate a commercial motor vehicle unless such person possesses a CDL which meets the standards contained in subpart J of this part, issued by his/her State or jurisdiction of domicile.

(b) *Exception.* If a commercial motor vehicle operator is domiciled in a foreign jurisdiction which, as determined by the Administrator, does not test drivers and issue a CDL in accordance with, or similar to, the standards contained in subparts F, G, and H of this part, the person shall obtain a Nonresident CDL from a State which does comply with the testing and licensing standards contained in such subparts F, G, and H.[1]

(c) *Learner's permit.* State learner's permits, issued for limited time periods according to State requirements, shall be considered valid commercial drivers' licenses for purposes of behind-the-wheel training on public roads or highways, if the following minimum conditions are met:

(1) The learner's permit holder is at all time accompanied by the holder of a valid CDL; and

(2) He/she either holds a valid automobile driver's license, or has passed such vision, sign/symbol, and knowledge tests as the State issuing the learner's permit ordinarily administers to applicants for automobile drivers' licenses.

[53 FR 27649, July 21, 1988, as amended at 54 FR 22285, May 23, 1989; 57 FR 31457, July 16, 1992]

Subpart C—Notification Requirements and Employer Responsibilities

§ 383.31 Notification of convictions for driver violations.

(a) Each person who operates a commercial motor vehicle, who has a commercial driver's license issued by a State or jurisdiction, and who is convicted of violating, in any type of motor vehicle, a State or local law relating to motor vehicle traffic control (other than a parking violation) in a State or jurisdiction other than the one which issued his/her license, shall notify an official designated by the State or jurisdiction which issued such license, of such conviction. The notification must be made within 30 days after the date that the person has been convicted.

(b) Each person who operates a commercial motor vehicle, who has a commercial driver's license issued by a State or jurisdiction, and who is convicted of violating, in any type of motor vehicle, a State or local law relating to motor vehicle traffic control (other than a parking violation), shall notify his/her current employer of such conviction. The notification must be made within 30 days after the date that the person has been convicted. If the driver is not currently employed, he/she must notify the State or jurisdiction which issued the license according to § 383.31(a).

(c) *Notification.* The notification to the State official and employer must be made in writing and contain the following information:

(1) Driver's full name;

(2) Driver's license number;

(3) Date of conviction;

[1] Effective December 29, 1988, the Administrator determined that commercial drivers' licensees issued by Canadian Provinces and Territories in conformity with the Canadian National Safety Code are in accordance with the standards of this part. Effective November 21, 1991, the Administrator determined that the new Licencias Federales de Conductor issued by the United Mexican States are in accordance with the standards of this part. Therefore, under the single license provision of § 383.21, a driver holding a commercial driver's license issued under the Canadian National Safety Code or a new Licencia Federal de Conductor issued by Mexico is prohibited from obtaining nonresident CDL, or any other type of driver's license, from a State or other jurisdiction in the United States.

(4) The specific criminal or other offense(s), serious traffic violation(s), and other violation(s) of State or local law relating to motor vehicle traffic control, for which the person was convicted and any suspension, revocation, or cancellation of certain driving privileges which resulted from such conviction(s);

(5) Indication whether the violation was in a commercial motor vehicle;

(6) Location of offense; and

(7) Driver's signature.

[52 FR 20587, June 1, 1987, as amended at 54 FR 40787, Oct. 3, 1989]

§ 383.33 Notification of driver's license suspensions.

Each employee who has a driver's license suspended, revoked, or canceled by a State or jurisdiction, who loses the right to operate a commercial motor vehicle in a State or jurisdiction for any period, or who is disqualified from operating a commercial motor vehicle for any period, shall notify his/her current employer of such suspension, revocation, cancellation, lost privilege, or disqualification. The notification must be made before the end of the business day following the day the employee received notice of the suspension, revocation, cancellation, lost privilege, or disqualification.

[54 FR 40788, Oct. 3, 1989]

§ 383.35 Notification of previous employment.

(a) Any person applying for employment as an operator of a commercial motor vehicle shall provide at the time of application for employment, the information specified in paragraph (c) of this section.

(b) All employers shall request the information specified in paragraph (c) of this section from all persons applying for employment as a commercial motor vehicle operator. The request shall be made at the time of application for employment.

(c) The following employment history information for the 10 years preceding the date the application is submitted shall be presented to the prospective employer by the applicant:

(1) A list of the names and addresses of the applicant's previous employers for which the applicant was an operator of a commercial motor vehicle;

(2) The dates the applicant was employed by these employers; and

(3) The reason for leaving such employment.

(d) The applicant shall certify that all information furnished is true and complete.

(e) An employer may require an applicant to provide additional information.

(f) Before an application is submitted, the employer shall inform the applicant that the information he/she provides in accordance with paragraph (c) of this section may be used, and the applicant's previous employers may be contacted for the purpose of investigating the applicant's work history.

§ 383.37 Employer responsibilities.

No employer shall knowingly allow, require, permit, or authorize an employee to operate a commercial motor vehicle in the United States during any period—

(a) In which the employee has a commercial motor vehicle driver's license suspended, revoked, or canceled by a State, has lost the right to operate a commercial motor vehicle in a State, or has been disqualified from operating a commercial motor vehicle;

(b) In which the employee has more than one commercial motor vehicle driver's license, *except* during the 10-day period beginning on the date such employee is issued a driver's license and *except,* whenever a State law enacted on or before June 1, 1986, requires such employee to have more than one driver's license. The second exception shall not be effective after December 31, 1989; or

(c) In which the employee, or the motor vehicle he/she is driving, or the motor carrier operation, is subject to an out-of-service order.

[52 FR 20587, June 1, 1987; 52 FR 32926, Sept. 1, 1987, as amended at 59 FR 26028, May 18, 1994]

Subpart D—Driver Disqualifications and Penalties

§ 383.51 Disqualification of drivers.

(a) *General.* A driver who is disqualified shall not drive a commercial motor vehicle. An employer shall not knowingly allow, require, permit, or authorize a driver who is disqualified to drive a commercial motor vehicle.

(b) Disqualification for driving while under the influence, leaving the scene of an accident, or commission of a felony.

(1) *General rule.* A driver who is convicted of a disqualifying offense specified in paragraph (b)(2) of this section, is disqualified for the period of time specified in paragraph (b)(3) of this section, if the offense was committed while operating a commercial motor vehicle.

(2) *Disqualifying offenses.* The following offenses are disqualifying offenses:

(i) Driving a commercial motor vehicle while under the influence of alcohol. This shall include:

(A) Driving a commercial motor vehicle while the person's alcohol concentration is 0.04 percent or more; or

(B) Driving under the influence of alcohol, as prescribed by State law; or

(C) Refusal to undergo such testing as is required by any State or jurisdiction in the enforcement of § 383.51(b)(2)(i)(A) or (B), or § 392.5(a)(2).

(ii) Driving a commercial motor vehicle while under the influence of a controlled substance as defined by § 383.5 of this part.

(iii) Leaving the scene of an accident involving a commercial motor vehicle;

(iv) A felony involving the use of a commercial motor vehicle, other than a felony described in paragraph (b)(2)(v) of this section; or

(v) The use of a commercial motor vehicle in the commission of a felony involving manufacturing, distributing, or dispensing a controlled substance as defined by § 383.5 of this part.

(3) *Duration of disqualification for driving while under the influence, leaving the scene of an accident, or commission of a felony*—(i) *First offenders.* A driver who is convicted of an offense described in paragraphs (b)(2)(i) through (b)(2)(iv) of this section, is disqualified for a period of one year provided the vehicle was not transporting hazardous materials required to be placarded under the Hazardous Materials Transportation Act (49 U.S.C. 5101 *et seq.*).

(ii) *First offenders transporting hazardous materials.* A driver who is convicted of an offense described in paragraphs (b)(2)(i) through (b)(2)(iv) of this section, is disqualified for a period of three years if the vehicle was transporting hazardous materials required to be placarded under the Hazardous Materials Transportation Act (49 U.S.C. 5101 *et seq.*).

(iii) *First offenders of controlled substance felonies.* A driver who is convicted of an offense described in paragraph (b)(2)(v) of this section, is disqualified for life.

(iv) *Subsequent offenders.* A driver who is convicted of an offense described in paragraphs (b)(2)(i) through (b)(2)(iv) of this section, is disqualified for life if the driver had been convicted once before in a separate incident of any offense described in paragraphs (b)(2)(i) through (b)(2)(iv) of this section.

(v) Any driver disqualified for life under § 383.51(b)(3)(iv) of this paragraph, who has both voluntarily enrolled in and successfully completed, an appropriate rehabilitation program which meets the standards of his/her State's driver licensing agency, may apply to the licensing agency for reinstatement of his/her commercial driver's license. Such applicants shall not be eligible for reinstatement from the State unless and until such time as he/she has first served a minimum disqualification period of 10 years and has fully met the licensing State's standards for reinstatement of commercial motor vehicle driving privileges. Should a reinstated driver be subsequently convicted of another disqualifying offense, as specified in paragraphs (b)(2)(i) through (b)(2)(iv) of this section, he/she shall be permanently disqualified for life, and shall be ineligible to again apply for a reduction of the lifetime disqualification.

(c) *Disqualification for serious traffic violations*—(1) *General rule.* A driver who is convicted of serious traffic violations is disqualified for the period of time specified in paragraph (c)(2) of

this section, if the offenses were committed while operating a commercial motor vehicle.

(2) *Duration of disqualification for serious traffic violations*—(i) *Second violation.* A driver who, during any 3-year period, is convicted of two serious traffic violations in separate incidents, is disqualified for a period of 60 days.

(ii) *Third violation.* A driver who, during any 3-year period, is convicted of three serious traffic violations in separate incidents, is disqualified for a period of 120 days.

(d) *Disqualification for violation of out-of-service orders*—(1) *General rule.* A driver who is convicted of violating an out-of-service order while driving a commercial motor vehicle is disqualified for the period of time specified in paragraph (d)(2) of this section. In addition, such driver is subject to special penalties as contained in § 383.53(b).

(2) *Duration of disqualification for violation of out-of-service orders*—(i) *First violation.* A driver is disqualified for not less than 90 days nor more than one year if the driver is convicted of a first violation of an out-of-service order.

(ii) *Second violation.* A driver is disqualified for not less than one year nor more than five years if, during any 10-year period, the driver is convicted of two violations of out-of-service orders in separate incidents.

(iii) *Third or subsequent violation.* A driver is disqualified for not less than three years nor more than five years if, during any 10-year period, the driver is convicted of three or more violations of out-of-service orders in separate incidents.

(iv) *Special rule for hazardous materials and passenger offenses.* A driver is disqualified for a period of not less than 180 days nor more than two years if the driver is convicted of a first violation of an out-of-service order while transporting hazardous materials required to be placarded under the Hazardous Materials Transportation Act (49 U.S.C. 5101 *et seq.*), or while operating motor vehicles designed to transport more than 15 passengers, including the driver. A driver is disqualified for a period of not less than three years nor more than five years if, during any 10-year period, the driver is convicted of any subsequent violations of out-of-service orders, in separate incidents, while transporting hazardous materials required to be placarded under the Hazardous Materials Transportation Act, or while operating motor vehicles designed to transport more than 15 passengers, including the driver.

(e) *Substantial compliance by States.* (1) Nothing in this rule shall be construed to require a State to apply its criminal or other sanctions for driving under the influence to a person found to have operated a commercial motor vehicle with an alcohol concentration of 0.04 percent, except licensing sanctions including suspension, revocation, or cancellation.

(2) A State that enacts and enforces through licensing sanctions the disqualifications prescribed in § 383.51(b) at the 0.04 alcohol concentration level and gives full faith and credit to the disqualification of commercial motor vehicle drivers by other States shall be deemed in substantial compliance with section 12009(a)(3) of the Commercial Motor Vehicle Safety Act of 1986.

[52 FR 20587, June 1, 1987, as amended at 53 FR 39050, Oct. 4, 1988; 54 FR 40788, Oct. 3, 1989; 55 FR 6727, Feb. 26, 1990; 57 FR 53295, Nov. 9, 1992; 59 FR 26028, May 18, 1994; 62 FR 37151, July 11, 1997]

§ 383.53 Penalties.

(a) *General rule.* Any person who violates the rules set forth in subparts B and C of this part may be subject to civil or criminal penalties as provided for in 49 U.S.C. 521(b).

(b) *Special penalties pertaining to violation of out-of-service orders*—(1) *Driver violations.* A driver who is convicted of violating an out-of-service order shall be subject to a civil penalty of not less than $1,000 nor more than $2,500, in addition to disqualification under § 383.51(d).

(2) *Employer violations.* An employer who is convicted of a violation of § 383.37(c) shall be subject to a civil penalty of not less than $2,500 nor more than $10,000.

[59 FR 26028, May 18, 1994]

Subpart E—Testing and Licensing Procedures

SOURCE: 53 FR 27649, July 21, 1988, unless otherwise noted.

§ 383.71 Driver application procedures.

(a) *Initial Commercial Driver's License.* Prior to obtaining a CDL, a person must meet the following requirements:

(1) A person who operates or expects to operate in interstate or foreign commerce, or is otherwise subject to part 391 of this title, shall certify that he/she meets the qualification requirements contained in part 391 of this title. A person who operates or expects to operate entirely in intrastate commerce and is not subject to part 391, is subject to State driver qualification requirements and must certify that he/she is not subject to part 391;

(2) Pass a knowledge test in accordance with the standards contained in subparts G and H of this part for the type of motor vehicle the person operates or expects to operate;

(3) Pass a driving or skills test in accordance with the standards contained in subparts G and H of this part taken in a motor vehicle which is representative of the type of motor vehicle the person operates or expects to operate; or provide evidence that he/she has successfully passed a driving test administered by an authorized third party;

(4) Certify that the motor vehicle in which the person takes the driving skills test is representative of the type of motor vehicle that person operates or expects to operate;

(5) Provide to the State of issuance the information required to be included on the CDL as specified in subpart J of this part;

(6) Certify that he/she is not subject to any disqualification, suspension, revocation, or cancellation as contained in § 383.51 and that he/she does not have a driver's license from more than one State or jurisdiction.

(7) The applicant shall surrender his/her non-CDL driver's licenses to the State.

(b) *License transfer.* When applying to transfer a CDL from one State of domicile to a new State domicile, an applicant shall apply for a CDL from the new State of domicile within no more than 30 days after establishing his/her new domicile. The applicant shall:

(1) Provide to the new State of domicile the certifications contained in § 383.71(a) (1) and (6):

(2) Provide to the new State of domicile updated information as specified in subpart J of this part;

(3) If the applicant wishes to retain a hazardous materials endorsement, comply with State requirements as specified in § 383.73(b)(4); and

(4) Surrender the CDL from the old State of domicile to the new State of domicile.

(c) *License renewal.* When applying for a renewal of a CDL, all applicants shall:

(1) Provide certification contained in § 383.71(a)(1);

(2) Provide update information as specified in subpart J of this part; and

(3) If a person wishes to retain a hazardous materials endorsement, pass the test for such endorsement as specified in § 383.121.

(d) *License upgrades.* When applying to operate a commercial motor vehicle in a different group or endorsement from the group or endorsement in which the applicant already has a CDL, all persons shall:

(1) Provide the necessary certifications as specified in § 383.71(a) (1) and (4); and

(2) Pass all tests specified in § 383.71(a) (2) and (3) for the new vehicle group and/or different endorsements.

(e) *Nonresident CDL.* When an applicant is domiciled in a foreign jurisdiction, as defined in § 383.5, where the commercial motor vehicle operator testing and licensing standards do not meet the standards contained in subparts G and H of this part, as determined by the Administrator, such applicant shall obtain a Nonresident CDL from a State which meets such standards. Such applicant shall:

(1) Complete the requirements to obtain a CDL contained in § 383.71(a); and

(2) After receipt of the CDL, and for as long as it is valid, notify the State which issued the CDL of any adverse action taken by any jurisdiction or

governmental agency, foreign or domestic, against his/her driving privileges. Such adverse actions would include but not be limited to license suspension or revocation, or disqualification from operating a commercial motor vehicle for the convictions described in §383.51. Notifications shall be made within the time periods specified in §383.33.

(f) If a State uses the alternative method described in §383.73(i) to achieve the objectives of the certifications in §383.71(a), then the driver applicant shall satisfy such alternative methods as are applicable to him/her with respect to initial licensing, license transfer, license renewal, and license upgrades.

§383.72 Implied consent to alcohol testing.

Any person who holds a CDL shall be deemed to have consented to such testing as is required of him/her by any State or jurisdiction in the enforcement of §383.51(b)(2)(i) and §392.5(a)(2). Consent is implied by driving a commercial motor vehicle.

[53 FR 39051, Oct. 4, 1988]

§383.73 State procedures.

(a) *Initial licensure.* Prior to issuing a CDL to a person, a State shall:

(1) Require the driver applicant to certify, pass tests, and provide information as described in §§383.71(a) (1) through (6);

(2) Check that the vehicle in which the applicant takes his/her test is representative of the vehicle group the applicant has certified that he/she operates or expects to operate;

(3) Initiate and complete a check of the applicant's driving record to ensure that the person is not subject to any disqualification, suspensions, revocations, or cancellations as contained in §383.51 and that the person does not have a driver's license from more than one State. The record check shall include but not be limited to the following:

(i) A check of the applicant's driving record as maintained by his/her current State of licensure, if any;

(ii) A check with the CDLIS to determine whether the driver applicant already has a CDL, whether the applicant's license has been suspended, revoked, or canceled, or if the applicant has been disqualified from operating a commercial motor vehicle; and

(iii) A check with the National Driver Register (NDR), when it is determined to be operational by the National Highway Traffic Safety Administrator, to determine whether the driver applicant has:

(A) Been disqualified from operating a motor vehicle (other than a commercial motor vehicle);

(B) Had a license (other than CDL) suspended, revoked, or canceled for cause in the 3-year period ending on the date of application; or

(C) Been convicted of any offenses contained in section 205(a)(3) of the National Drivers Register Act of 1982 (23 U.S.C. 401 note); and

(4) Require the driver applicant, if he/she has moved from another State, to surrender his/her driver's license issued by another State.

(b) *License transfers.* Prior to issuing a CDL to a person who has a CDL from another State, a State shall:

(1) Require the driver applicant to make the certifications contained in §383.71(a);

(2) Complete a check of the driver applicant's record as contained in §383.73(a)(3);

(3) Request and receive updates of information specified in subpart J of this part;

(4) If such applicant wishes to retain a hazardous materials endorsement, ensure that the driver has, within the 2 years preceding the transfer, either:

(i) Passed the test for such endorsement specified in §383.121; or

(ii) Successfully completed a hazardous materials test or training that is given by a third party and that is deemed by the State to substantially cover the same knowledge base as that described in §383.121; and

(5) Obtain the CDL issued by the applicant's previous State of domicile.

(c) *License Renewals.* Prior to renewing any CDL a State shall:

(1) Require the driver applicant to make the certifications contained in §383.71(a);

(2) Complete a check of the driver applicant's record as contained in §383.73(a)(3);

(3) Request and receive updates of information specified in subpart J of this part; and

(4) If such applicant wishes to retain a hazardous materials endorsement, require the driver to pass the test for such endorsement specified in § 383.121.

(d) *License upgrades.* Prior to issuing an upgrade of a CDL, a State shall:

(1) Require such driver applicant to provide certifications and pass tests as described in § 383.71(d); and

(2) Complete a check of the driver applicant's record as described in § 383.73(a)(3).

(e) *Nonresident CDL.* A State may issue a Nonresident CDL to a person domiciled in a foreign country if the Administrator has determined that the commercial motor vehicle testing and licensing standards in the foreign jurisdiction of domicile do not meet the standards contained in this part. State procedures for the issuance of a nonresident CDL, for any modifications thereto, and for notifications to the CDLIS shall at a minimum be identical to those pertaining to any other CDL, with the following exceptions:

(1) If the applicant is requesting a transfer of his/her Nonresident CDL, the State shall obtain the Nonresident CDL currently held by the applicant and issued by another State;

(2) The State shall add the word ''Nonresident'' to the face of the CDL, in accordance with § 383.153(b); and

(3) The State shall have established, prior to issuing any Nonresident CDL, the practical capability of disqualifying the holder of any Nonresident CDL, by withdrawing, suspending, canceling, and revoking his/her Nonresident CDL as if the Nonresident CDL were a CDL issued to a resident of the State.

(f) *License issuance.* After the State has completed the procedures described in § 383.73 (a), (b), (c), (d) or (e), it may issue a CDL to the driver applicant. The State shall notify the operator of the CDLIS of such issuance, transfer, renewal, or upgrade within the 10-day period beginning on the date of license issuance.

(g) *Penalties for false information.* If a State determines, in its check of an applicant's license status and record prior to issuing a CDL, or at any time after the CDL is issued, that the applicant has falsified information contained in subpart J of this part or any of the certifications required in § 383.71(a), the State shall at a minimum suspend, cancel, or revoke the person's CDL or his/her pending application, or disqualify the person from operating a commercial motor vehicle for a period of at least 60 consecutive days.

(h) *Reciprocity.* A State shall allow any person who has a valid CDL which is not suspended, revoked, or canceled, and who is not disqualified from operating a commercial motor vehicle, to operate a commercial motor vehicle in the State.

(i) *Alternative procedures.* A State may implement alternative procedures to the certification requirements of § 383.71(a) (1), (4), and (6), provided those procedures ensure that the driver meets the requirements of those paragraphs.

[53 FR 27649, July 21, 1988, as amended at 54 FR 40788, Oct. 3, 1989]

§ 383.75 Third party testing.

(a) *Third party tests.* A State may authorize a person (including another State, an employer, a private driver training facility or other private institution, or a department, agency or instrumentality of a local government) to administer the skills tests as specified in subparts G and H of this part, if the following conditions are met:

(1) The tests given by the third party are the same as those which would otherwise be given by the State; and

(2) The third party as an agreement with the State containing, at a minimum, provisions that:

(i) Allow the FHWA, or its representative, and the State to conduct random examinations, inspections and audits without prior notice;

(ii) Require the State to conduct onsite inspections at least annually;

(iii) Require that all third party examiners meet the same qualification and training standards as State examiners, to the extent necessary to conduct skills tests in compliance with subparts G and H;

(iv) Require that, at least on an annual basis, State employees take the tests actually administered by the third party as if the State employee

were a test applicant, or that States test a sample of drivers who were examined by the third party to compare pass/fail results; and

(v) Reserve unto the State the right to take prompt and appropriate remedial action against the third-party testers in the event that the third-party fails to comply with State or Federal standards for the CDL testing program, or with any other terms of the third-party contract.

(b) *Proof of testing by a third party.* A driver applicant who takes and passes driving tests administered by an authorized third party shall provide evidence to the State licensing agency that he/she has successfully passed the driving tests administered by the third party.

§383.77 Substitute for driving skills tests.

At the discretion of a State, the driving skill test as specified in §383.113 may be waived for a CMV operator who is currently licensed at the time of his/her application for a CDL, and substituted with either an applicant's driving record and previous passage of an acceptable skills test, or an applicant's driving record in combination with certain driving experience. The State shall impose conditions and limitations to restrict the applicants from whom a State may accept alternative requirements for the skills test described in §383.113. Such conditions must require at least the following:

(a) An applicant must certify that, during the two-year period immediately prior to applying for a CDL, he/she:

(1) Has not had more than one license (except in the instances specified in §383.21(b));

(2) Has not had any license suspended, revoked, or canceled;

(3) Has not had any convictions for any type of motor vehicle for the disqualifying offenses contained in §383.51(b)(2);

(4) Has not had more than one conviction for any type of motor vehicle for serious traffic violations; and

(5) Has not had any conviction for a violation of State or local law relating to motor vehicle traffic control (other than a parking violation) arising in connection with any traffic accident, and has no record of an accident in which he/she was at fault; and

(b) An applicant must provide evidence and certify that:

(1) He/she is regularly employed in a job requiring operation of a CMV, and that either:

(2) He/she has previously taken and passed a skills test given by a State with a classified licensing and testing system, and that the test was behind-the-wheel in a representative vehicle for that applicant's driver's license classification; or

(3) He/she has operated, for at least 2 years immediately preceding application for a CDL, a vehicle representative of the commercial motor vehicle the driver applicant operates or expects to operate.

[53 FR 27649, July 21, 1988, as amended at 55 FR 25606, June 22, 1990]

Subpart F—Vehicle Groups and Endorsements

SOURCE: 53 FR 27651, July 21, 1988, unless otherwise noted.

§383.91 Commercial motor vehicle groups.

(a) Vehicle group descriptions. Each driver applicant must possess and be tested on his/her knowledge and skills, described in subpart G of this part, for the commercial motor vehicle group(s) for which he/she desires a CDL. The commercial motor vehicle groups are as follows:

(1) Combination vehicle (Group A)—Any combination of vehicles with a gross combination weight rating (GCWR) of 11,794 kilograms or more (26,001 pounds or more) provided the GVWR of the vehicle(s) being towed is in excess of 4,536 kilograms (10,000 pounds).

(2) Heavy Straight Vehicle (Group B)—Any single vehicle with a GVWR of 11,794 kilograms or more (26,001 pounds or more), or any such vehicle towing a vehicle not in excess of 4,536 kilograms (10,000 pounds) GVWR.

(3) Small Vehicle (Group C)—Any single vehicle, or combination of vehicles, that meets neither the definition of

Group A nor that of Group B as contained in this section, but that either is designed to transport 16 or more passengers including the driver, or is used in the transportation of materials found to be hazardous for the purposes of the Hazardous Materials Transportation Act and which require the motor vehicle to be placarded under the Hazardous Materials Regulations (49 CFR part 172, subpart F).

(b) *Representative vehicle.* For purposes of taking the driving test in accordance with § 383.113, a representative vehicle for a given vehicle group contained in § 383.91(a), is any commercial motor vehicle which meets the definition of that vehicle group.

(c) *Relation between vehicle groups.* Each driver applicant who desires to operate in a different commercial motor vehicle group from the one which his/her CDL authorizes shall be required to retake and pass all related tests, except the following:

(1) A driver who has passed the knowledge and skills tests for a combination vehicle (Group A) may operate a heavy straight vehicle (Group B) or a small vehicle (Group C), provided that he/she possesses the requisite endorsement(s); and

(2) A driver who has passed the knowledge and skills tests for a heavy straight vehicle (Group B) may operate any small vehicle (Group C), provided that he/she possesses the requisite endorsement(s).

(d) *Vehicle group illustration.* Figure 1 illustrates typical vehicles within each of the vehicle groups defined in this section.

Figure 1
VEHICLE GROUPS AS ESTABLISHED BY FHWA (SECTION 383.91)

[Note: Certain types of vehicles, such as passenger and doubles/triples, will require an endorsement. Please consult text for particulars.]

Group:	*Description:
A	Any combination of vehicles with a GCWR of 26,001 or more pounds provided the GVWR of the vehicle(s) being towed is in excess of 10,000 pounds. (Holders of a Group A license may, with any appropriate endorsements, operate all vehicles within Groups B and C.) Examples include but are not limited to: 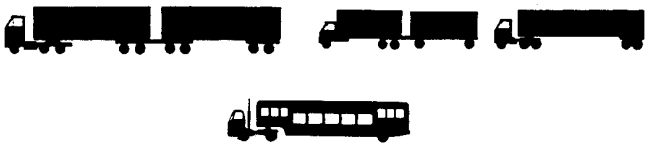
B	Any single vehicle with a GVWR of 26,001 or more pounds, or any such vehicle towing a vehicle not in excess of 10,000 pounds GVWR. (Holders of a Group B license may, with any appropriate endorsements, operate all vehicles within Group C.) Examples include but are not limited to:
C	Any single vehicle, or combination of vehicles, that does not meet the definition of Group A or Group B as contained herein, but that either is designed to transport 16 or more passengers including the driver, or is placarded for hazardous materials. Examples include but are not limited to:

*The representative vehicle for the skills test must meet the written description for that group. The silhouettes typify, but do not fully cover, the types of vehicles falling within each group.

[53 FR 27651, July 21, 1988, as amended at 54 FR 47989, Nov. 20, 1989; 61 FR 9566, Mar. 8, 1996]

§ 383.93 Endorsements.

(a) *General.* In addition to taking and passing the knowledge and skills tests described in subpart G of this part, all persons who operate or expect to operate the type(s) of motor vehicles described in paragraph (b) of this section shall take and pass specialized tests to obtain each endorsement. The State shall issue CDL endorsements only to drivers who successfully complete the tests.

(b) *Endorsement descriptions.* An operator must obtain State-issued endorsements to his/her CDL to operate commercial motor vehicles which are:

(1) Double/triple trailers;

(2) Passenger vehicles;

(3) Tank vehicles; or

(4) Required to be placarded for hazardous materials.

(c) *Endorsement testing requirements.* The following tests are required for the endorsements contained in paragraph (b) of this section:

(1) *Double/Triple Trailers*—a knowledge test;

(2) *Passenger*—a knowledge and a skills test;

(3) *Tank vehicle*—a knowledge test; and

(4) *Hazardous Materials*—a knowledge test.

§ 383.95 Air brake restrictions.

(a) If an applicant either fails the air brake component of the knowledge test, or performs the skills test in a vehicle not equipped with air brakes, the State shall indicate on the CDL, if issued, that the person is restricted from operating a CMV equipped with air brakes.

(b) For the purposes of the skills test and the restriction, air brakes shall include any braking system operating fully or partially on the air brake principle.

Subpart G—Required Knowledge and Skills

SOURCE: 53 FR 27654, July 21, 1988, unless otherwise noted.

§ 383.110 General requirement.

All drivers of commercial motor vehicles shall have knowledge and skills necessary to operate a commercial motor vehicle safely as contained in this subpart. A sample of the specific types of items which a State may wish to include in the knowledge and skills tests that it administers to CDL applicants is included in the appendix to this subpart G.

§ 383.111 Required knowledge.

All commercial motor vehicle operators must have knowledge of the following general areas:

(a) *Safe operations regulations.* Driver-related elements of the regulations contained in 49 CFR parts 382, 391, 392, 393, 395, 396, and 397, such as: Motor vehicle inspection, repair, and maintenance requirements; procedures for safe vehicle operations; the effects of fatigue, poor vision, hearing, and general health upon safe commercial motor vehicle operation; the types of motor vehicles and cargoes subject to the requirements; and the effects of alcohol and drug use upon safe commercial motor vehicle operations.

(b) *Commercial motor vehicle safety control systems.* Proper use of the motor vehicle's safety system, including lights, horns, side and rear-view mirrors, proper mirror adjustments, fire extinguishers, symptoms of improper operation revealed through instruments, motor vehicle operation characteristics, and diagnosing malfunctions. Commercial motor vehicle drivers shall have knowledge on the correct procedures needed to use these safety systems in an emergency situation, e.g., skids and loss of brakes.

(c) *Safe vehicle control*—(1) *Control systems* The purpose and function of the controls and instruments commonly found on commercial motor vehicles.

(2) *Basic control.* The proper procedures for performing various basic maneuvers.

(3) *Shifting.* The basic shifting rules and terms, as well as shift patterns and procedures for common transmissions.

(4) *Backing.* The procedures and rules for various backing maneuvers.

(5) *Visual search.* The importance of proper visual search, and proper visual search methods.

(6) *Communication.* The principles and procedures for proper communications

and the hazards of failure to signal properly.

(7) *Speed management.* The importance of understanding the effects of speed.

(8) *Space management.* The procedures and techniques for controlling the space around the vehicle.

(9) *Night operation.* Preparations and procedures for night driving.

(10) *Extreme driving conditions.* The basic information on operating in extreme driving conditions and the hazards that are encountered in extreme conditions.

(11) *Hazard perceptions.* The basic information on hazard perception and clues for recognition of hazards.

(12) *Emergency maneuvers.* The basic information concerning when and how to make emergency maneuvers.

(13) *Skid control and recovery.* The information on the causes and major types of skids, as well as the procedures for recovering from skids.

(d) *Relationship of cargo to vehicle control.* The principles and procedures for the proper handling of cargo.

(e) *Vehicle inspections:* The objectives and proper procedures for performing vehicle safety inspections, as follows:

(1) The importance of periodic inspection and repair to vehicle safety.

(2) The effect of undiscovered malfunctions upon safety.

(3) What safety-related parts to look for when inspecting vehicles.

(4) Pre-trip/enroute/post-trip inspection procedures.

(5) Reporting findings.

(f) *Hazardous materials knowledge, such as:* What constitutes hazardous material requiring an endorsement to transport; classes of hazardous materials; labeling/placarding requirements; and the need for specialized training as a prerequisite to receiving the endorsement and transporting hazardous cargoes.

(g) *Air brake knowledge as follows:*

(1) Air brake system nomenclature;

(2) The dangers of contaminated air supply;

(3) Implications of severed or disconnected air lines between the power unit and the trailer(s);

(4) Implications of low air pressure readings;

(5) Procedures to conduct safe and accurate pre-trip inspections.

(6) Procedures for conducting enroute and post-trip inspections of air actuated brake systems, including ability to detect defects which may cause the system to fail.

(h) *Operators for the combination vehicle group shall also have knowledge of:*

(1) Coupling and uncoupling—The procedures for proper coupling and uncoupling a tractor to semi-trailer.

(2) Vehicle inspection—The objectives and proper procedures that are *unique* for performing vehicle safety inspections on combination vehicles.

[53 FR 27654, July 21, 1988, as amended at 62 FR 37151, July 11, 1997]

§ 383.113 Required skills.

(a) *Basic vehicle control skills.* All applicants for a CDL must possess and demonstrate basic motor vehicle control skills for each vehicle group which the driver operates or expects to operate. These skills should include the ability to start, to stop, and to move the vehicle forward and backward in a safe manner.

(b) *Safe driving skills.* All applicants for a CDL must possess and demonstrate the safe driving skills for their vehicle group. These skills should include proper visual search methods, appropriate use of signals, speed control for weather and traffic conditions, and ability to position the motor vehicle correctly when changing lanes or turning.

(c) *Air brake skills.* Except as provided in § 393.95, all applicants shall demonstrate the following skills with respect to inspection and operation of air brakes:

(1) *Pre-trip inspection skills.* Applicants shall demonstrate the skills necessary to conduct a pre-trip inspection which includes the ability to:

(i) Locate and verbally identify air brake operating controls and monitoring devices;

(ii) Determine the motor vehicle's brake system condition for proper adjustments and that air system connections between motor vehicles have been properly made and secured;

(iii) Inspect the low pressure warning device(s) to ensure that they will activate in emergency situations;

(iv) Ascertain, with the engine running, that the system maintains an adequate supply of compressed air;

(v) Determine that required minimum air pressure build up time is within acceptable limits and that required alarms and emergency devices automatically deactivate at the proper pressure level; and

(vi) Operationally check the brake system for proper performance.

(2) *Driving skills.* Applicants shall successfully complete the skills tests contained in § 383.113 in a representative vehicle equipped with air brakes.

(d) *Test area.* Skills tests shall be conducted in on-street conditions or under a combination of on-street and off-street conditions.

(e) *Simulation technology.* A State may utilize simulators to perform skills testing, but under no circumstances as a substitute for the required testing in on-street conditions.

§ 383.115 Requirements for double/triple trailers endorsement.

In order to obtain a Double/Triple Trailers endorsement each applicant must have knowledge covering:

(a) Procedures for assembly and hookup of the units;

(b) Proper placement of heaviest trailer;

(c) Handling and stability characteristics including off-tracking, response to steering, sensory feedback, braking, oscillatory sway, rollover in steady turns, yaw stability in steady turns; and

(d) Potential problems in traffic operations, including problems the motor vehicle creates for other motorists due to slower speeds on steep grades, longer passing times, possibility for blocking entry of other motor vehicles on freeways, splash and spray impacts, aerodynamic buffeting, view blockages, and lateral placement.

§ 383.117 Requirements for passenger endorsement.

An applicant for the passenger endorsement must satisfy both of the following additional knowledge and skills test requirements.

(a) *Knowledge test.* All applicants for the passenger endorsement must have knowledge covering at least the following topics:

(1) Proper procedures for loading/unloading passengers;

(2) Proper use of emergency exits, including push-out windows;

(3) Proper responses to such emergency situations as fires and unruly passengers;

(4) Proper procedures at railroad crossings and drawbridges; and

(5) Proper braking procedures.

(b) *Skills test.* To obtain a passenger endorsement applicable to a specific vehicle group, an applicant must take his/her skills test in a passenger vehicle satisfying the requirements of that group as defined in § 383.91.

§ 383.119 Requirements for tank vehicle endorsement.

In order to obtain a Tank Vehicle Endorsement, each applicant must have knowledge covering the following:

(a) Causes, prevention, and effects of cargo surge on motor vehicle handling;

(b) Proper braking procedures for the motor vehicle when it is empty, full and partially full;

(c) Differences in handling of baffled/compartmental tank interiors versus non-baffled motor vehicles;

(d) Differences in tank vehicle type and construction;

(e) Differences in cargo surge for liquids of varying product densities;

(f) Effects of road grade and curvature on motor vehicle handling with filled, half-filled and empty tanks;

(g) Proper use of emergency systems; and

(h) For drivers of DOT specification tank vehicles, retest and marking requirements.

§ 383.121 Requirements for hazardous materials endorsement.

In order to obtain a Hazardous Material Endorsement each applicant must have such knowledge as is required of a driver of a hazardous materials laden vehicle, from information contained in 49 CFR parts 171, 172, 173, 177, 178, and 397 on the following:

(a) Hazardous materials regulations including:

(1) Hazardous materials table;

(2) Shipping paper requirements;

(3) Marking;

(4) Labeling;
(5) Placarding requirements;
(6) Hazardous materials packaging;
(7) Hazardous materials definitions and preparation;
(8) Other regulated material (e.g., ORM–D);
(9) Reporting hazardous materials accidents; and
(10) Tunnels and railroad crossings.
(b) Hazardous materials handling including:
(1) Forbidden Materials and Packages;
(2) Loading and Unloading Materials;
(3) Cargo Segregation;
(4) Passenger Carrying Buses and Hazardous Materials;
(5) Attendance of Motor Vehicles;
(6) Parking;
(7) Routes;
(8) Cargo Tanks; and
(9) ''Safe Havens.''
(c) Operation of emergency equipment including:
(1) Use of equipment to protect the public;
(2) Special precautions for equipment to be used in fires;
(3) Special precautions for use of emergency equipment when loading or unloading a hazardous materials laden motor vehicle; and
(4) Use of emergency equipment for tank vehicles.
(d) Emergency response procedures including:
(1) Special care and precautions for different types of accidents;
(2) Special precautions for driving near a fire and carrying hazardous materials, and smoking and carrying hazardous materials;
(3) Emergency procedures; and
(4) Existence of special requirements for transporting Class A and B explosives.

APPENDIX TO SUBPART G—REQUIRED KNOWLEDGE AND SKILLS—SAMPLE GUIDELINES

The following is a sample of the specific types of items which a State may wish to include in the knowledge and skills tests that it administers to CDL applicants. This appendix closely follows the framework of §§383.111 and 383.113. It is intended to provide more specific guidance and suggestion to States. Additional detail in this appendix is not binding and States may depart from it at their discretion provided their CDL program tests for the general areas of knowledge and skill specified in §§383.111 and 383.113.

EXAMPLES OF SPECIFIC KNOWLEDGE ELEMENTS

(a) *Safe operations regulations.* Driver-related elements of the following regulations:
(1) Motor vehicle inspection, repair, and maintenance requirements as contained in parts 393 and 396 of this title;
(2) Procedures for safe vehicle operations as contained in part 392 of this title;
(3) The effects of fatigue, poor vision, hearing, and general health upon safe commercial motor vehicle operation as contained in parts 391, 392, and 395 of this title;
(4) The types of motor vehicles and cargoes subject to the requirements contained in part 397 of this title; and
(5) The effects of alcohol and drug use upon safe commercial motor vehicle operations as contained in parts 391 and 395 of this title.
(b) *Commercial motor vehicle safety control systems.* Proper use of the motor vehicle's safety system, including lights, horns, side and rear-view mirrors, proper mirror adjustments, fire extinguishers, symptoms of improper operation revealed through instruments, motor vehicle operation characteristics, and diagnosing malfunctions. Commercial motor vehicle drivers shall have knowledge on the correct procedures needed to use these safety systems in an emergency situation, e.g., skids and loss of brakes.
(c) *Safe vehicle control*—(1) *Control systems.* The purpose and function of the controls and instruments commonly found on commercial motor vehicles.
(2) *Basic control.* The proper procedures for performing various basic maneuvers, including:
(i) Starting, warming up, and shutting down the engine;
(ii) Putting the vehicle in motion and stopping;
(iii) Backing in a straight line; and
(iv) Turning the vehicle, e.g., basic rules, off-tracking, right/left turns and right curves.
(3) *Shifting.* The basic shifting rules and terms, as well as shift patterns and procedures for common transmissions, including:
(i) Key elements of shifting, e.g., controls, when to shift and double clutching;
(ii) Shift patterns and procedures; and
(iii) Consequences of improper shifting.
(4) *Backing.* The procedures and rules for various backing maneuvers, including:
(i) Backing principles and rules; and
(ii) Basic backing maneuvers, e.g., straight-line backing, and backing on a curved path.
(5) *Visual search.* The importance of proper visual search, and proper visual search methods, including:
(i) Seeing ahead and to the sides;
(ii) Use of mirrors; and

(iii) Seeing to the rear.

(6) *Communication.* The principles and procedures for proper communications and the hazards of failure to signal properly, including:

(i) Signaling intent, e.g., signaling when changing speed or direction in traffic;

(ii) Communicating presence, e.g., using horn or lights to signal presence; and

(iii) Misuse of communications.

(7) *Speed management.* The importance of understanding the effects of speed, including:

(i) Speed and stopping distance;

(ii) Speed and surface conditions;

(iii) Speed and the shape of the road;

(iv) Speed and visibility; and

(v) Speed and traffic flow.

(8) *Space management.* The procedures and techniques for controlling the space around the vehicle, including:

(i) The importance of space management;

(ii) Space cushions, e.g., controlling space ahead/to the rear;

(iii) Space to the sides; and

(iv) Space for traffic gaps.

(9) *Night operation.* Preparations and procedures for night driving, including:

(i) Night driving factors, e.g., driver factors, (vision, glare, fatigue, inexperience), roadway factors, (low illumination, variation in illumination, familiarity with roads, other road users, especially drivers exhibiting erratic or improper driving), vehicle factors (headlights, auxiliary lights, turn signals, windshields and mirrors); and

(ii) Night driving procedures, e.g., preparing to drive at night and driving at night.

(10) *Extreme driving conditions.* The basic information on operating in extreme driving conditions and the hazards that are encountered in extreme conditions, including:

(i) Adverse weather;

(ii) Hot weather; and

(iii) Mountain driving.

(11) *Hazard perceptions.* The basic information on hazard perception and clues for recognition of hazards, including:

(i) Importance of hazards recognition;

(ii) Road characteristics; and

(iii) Road user activities.

(12) *Emergency maneuvers.* The basic information concerning when and how to make emergency maneuvers, including:

(i) Evasive steering;

(ii) Emergency stop;

(iii) Off-road recovery;

(iv) Brake failure; and

(v) Blowouts.

(13) *Skid control and recovery.* The information on the causes and major types of skids, as well as the procedures for recovering from skids.

(d) *Relationship of cargo to vehicle control.* The principles and procedures for the proper handling of cargo, including:

(1) The importance of proper cargo handling, e.g., consequences of improperly secured cargo, drivers' responsibilities, Federal/State and local regulations.

(2) Principles of weight distribution.

(3) Principles and methods of cargo securement.

(e) *Vehicle inspections:* The objectives and proper procedures for performing vehicle safety inspections, as follows:

(1) The importance of periodic inspection and repair to vehicle safety and to prevention of enroute breakdowns.

(2) The effect of undiscovered malfunctions upon safety.

(3) What safety-related parts to look for when inspecting vehicles, e.g., fluid leaks, interference with visibility, bad tires, wheel and rim defects, braking system defects, steering system defects, suspension system defects, exhaust system defects, coupling system defects, and cargo problems.

(4) Pre-trip/enroute/post-trip inspection procedures.

(5) Reporting findings.

(f) *Hazardous materials knowledge, as follows:*

(1) What constitutes hazardous material requiring an endorsement to transport; and

(2) Classes of hazardous materials, labeling/placarding requirements, and the need for specialized training as a prerequisite to receiving the endorsement and transporting hazardous cargoes.

(g) *Air brake knowledge as follows:*

(1) General air brake system nomenclature;

(2) The dangers of contaminated air (dirt, moisture and oil) supply;

(3) Implications of severed or disconnected air lines between the power unit and the trailer(s);

(4) Implications of low air pressure readings;

(5) Procedures to conduct safe and accurate pre-trip inspections, including knowledge about:

(i) Automatic fail-safe devices;

(ii) System monitoring devices; and

(iii) Low pressure warning alarms.

(6) Procedures for conducting enroute and post-trip inspections of air actuated brake systems, including ability to detect defects which may cause the system to fail, including:

(i) Tests which indicate the amount of air loss from the braking system within a specified period, with and without the engine running; and

(ii) Tests which indicate the pressure levels at which the low air pressure warning devices and the tractor protection valve should activate.

(h) *Operators for the combination vehicle group shall also have knowledge of:*

(1) *Coupling and uncoupling.* The procedures for proper coupling and uncoupling a tractor to semi-trailer.

(2) Vehicle inspection—The objectives and proper procedures that are *unique* for performing vehicle safety inspections on combination vehicles.

EXAMPLES OF SPECIFIC SKILLS ELEMENTS

These examples relate to paragraphs (a) and (b) of § 383.113 only.

(a) *Basic vehicle control skills.* All applicants for a CDL must possess and demonstrate the following basic motor vehicle control skills for each vehicle group which the driver operates or expects to operate. These skills shall include:

(1) Ability to start, warm-up, and shut down the engine;

(2) Ability to put the motor vehicle in motion and accelerate smoothly, forward and backward;

(3) Ability to bring the motor vehicle to a smooth stop;

(4) Ability to back the motor vehicle in a straight line, and check path and clearance while backing;

(5) Ability to position the motor vehicle to negotiate and then make left and right turns;

(6) Ability to shift as required and select appropriate gear for speed and highway conditions;

(7) Ability to back along a curved path; and

(8) Ability to observe the road and the behavior of other motor vehicles, particularly before changing speed and direction.

(b) *Safe driving skills.* All applicants for a CDL must possess and demonstrate the following safe driving skills for any vehicle group. These skills shall include:

(1) Ability to use proper visual search methods.

(2) Ability to signal appropriately when changing speed or direction in traffic.

(3) Ability to adjust speed to the configuration and condition of the roadway, weather and visibility conditions, traffic conditions, and motor vehicle, cargo and driver conditions;

(4) Ability to choose a safe gap for changing lanes, passing other vehicles, as well as for crossing or entering traffic;

(5) Ability to position the motor vehicle correctly before and during a turn to prevent other vehicles from passing on the wrong side as well as to prevent problems caused by off-tracking;

(6) Ability to maintain a safe following distance depending on the condition of the road, on visibility, and on vehicle weight; and

(7) Ability to adjust operation of the motor vehicle to prevailing weather conditions including speed selection, braking, direction changes and following distance to maintain control.

Subpart H—Tests

SOURCE: 53 FR 27657, July 21, 1988, unless otherwise noted.

§ 383.131 Test procedures.

(a) *Driver information manuals.* Information on how to obtain a CDL and endorsements shall be included in manuals and made available by States to CDL applicants. All information provided to the applicant shall include the following:

(1) Information on the requirements described in § 383.71, the implied consent to alcohol testing described in § 383.72, the procedures and penalties, contained in § 383.51(b) to which a CDL holder is exposed for refusal to comply with such alcohol testing, State procedures described in § 383.73, and other appropriate driver information contained in subpart E of this part;

(2) Information on vehicle groups and endorsements as specified in subpart F of this part;

(3) The substance of the knowledge and skills which drivers shall have as outlined in subpart G of this part for the different vehicle groups and endorsements;

(4) Details of testing procedures, including the purpose of the tests, how to respond, any time limits for taking the test, and any other special procedures determined by the State of issuance; and

(5) Directions for taking the tests.

(b) *Examiner procedures.* A State shall provide to test examiners details on testing and any other State-imposed requirements in the examiner's manual, and shall ensure that examiners are qualified to administer tests on the basis of training and/or other experience. States shall provide standardized scoring sheets for the skills tests, as well as standardized driving instructions for the applicants. Such examiners' manuals shall contain the following:

(1) Information on driver application procedures contained in § 383.71, State procedures described in § 383.73, and other appropriate driver information contained in subpart E of this part;

(2) Details on information which must be given to the applicant;

(3) Details on how to conduct the tests;

(4) Scoring procedures and minimum passing scores;

(5) Information for selecting driving test routes;

(6) List of the skills to be tested;

(7) Instructions on where and how the skills will be tested;

(8) How performance of the skills will be scored; and

(9) Causes for automatic failure of skills tests.

[53 FR 27657, July 21, 1988, as amended at 53 FR 39051, Oct. 4, 1988]

§ 383.133 Testing methods.

(a) All tests shall be constructed in such a way as to determine if the applicant possesses the required knowledge and skills contained in subpart G of this part for the type of motor vehicle or endorsement the applicant wishes to obtain.

(b) States shall develop their own specifications for the tests for each vehicle group and endorsement which must be at least as stringent as the Federal standards.

(c) States shall determine specific methods for scoring the knowledge and skills tests.

(d) Passing scores must meet those standards contained in § 383.135.

(e) Knowledge and skills tests shall be based solely on the information contained in the driver manuals referred to in § 383.131(a).

(f) Each knowledge test shall be valid and reliable so as to assure that driver applicants possess the knowledge required under § 383.111.

(g) Each basic knowledge test, i.e., the test covering the areas referred to in § 383.111 for the applicable vehicle group, shall contain at least 30 items, exclusive of the number of items testing air brake knowledge. Each endorsement knowledge test, and the air brake component of the basic knowledge test as described in § 383.111(g), shall contain a number of questions that is sufficient to test the driver applicant's knowledge of the required subject matter with validity and reliability.

(h) The skills tests shall have administrative procedures, designed to achieve interexaminer reliability, that are sufficient to ensure fairness of pass/fail rates.

§ 383.135 Minimum passing scores.

(a) The driver applicant must correctly answer at least 80 percent of the questions on each knowledge test in order to achieve a passing score on such knowledge test.

(b) To achieve a passing score on the skills test, the driver applicant must demonstrate that he/she can successfully perform all of the skills listed in § 383.113.

(c) If the driver applicant does not obey traffic laws, or causes an accident during the test, he/she shall automatically fail the test.

(d) The scoring of the basic knowledge and skills tests shall be adjusted as follows to allow for the air brake restriction (§ 383.95):

(1) If the applicant scores less than 80 percent on the air brake component of the basic knowledge test as described in § 383.111(g), the driver will have failed the air brake component and, if the driver is issued a CDL, an air brake restriction shall be indicated on the license; and

(2) If the applicant performs the skills test in a vehicle not equipped with air brakes, the driver will have omitted the air brake component as described in § 383.113(c) and, if the driver is issued a CDL, the air brake restriction shall be indicated on the license.

Subpart I [Reserved]

Subpart J—Commercial Driver's License Document

SOURCE: 53 FR 27657, July 21, 1988, unless otherwise noted.

§ 383.151 General.

The CDL shall be a document that is easy to recognize as a CDL. At a minimum, the document shall contain information specified in § 383.153.

§ 383.153 Information on the document and application.

(a) All CDLs shall contain the following information:

(1) The prominent statement that the license is a ''Commercial Driver's License'' or ''CDL,'' except as specified in §383.153(b).

(2) The full name, signature, and mailing address of the person to whom such license is issued;

(3) Physical and other information to identify and describe such person including date of birth (month, day, and year), sex, and height;

(4) Color photograph of the driver;

(5) The driver's State license number;

(6) The name of the State which issued the license;

(7) The date of issuance and the date of expiration of the license;

(8) The group or groups of commercial motor vehicle(s) that the driver is authorized to operate, indicated as follows:

(i) A for Combination Vehicle;

(ii) B for Heavy Straight Vehicle; and

(iii) C for Small Vehicle.

(9) The endorsement(s) for which the driver has qualified, if any, indicated as follows:

(i) T for double/triple trailers;

(ii) P for passenger;

(iii) N for tank vehicle;

(iv) H for hazardous materials;

(v) X for a combination of the tank vehicle and hazardous materials endorsements; and

(vi) At the discretion of the State, additional codes for additional groupings of endorsements, as long as each such discretionary code is fully explained on the front or back of the CDL document.

(b) If the CDL is a Nonresident CDL, it shall contain the prominent statement that the license is a ''Nonresident Commercial Driver's License'' or ''Nonresident CDL.'' The word ''Nonresident'' must be conspicuously and unmistakably displayed, but may be noncontiguous with the words ''Commercial Driver's License'' or ''CDL.''

(c) If the State has issued the applicant an air brake restriction as specified in §383.95, that restriction must be indicated on the license.

(d) Except in the case of a Nonresident CDL:

(1) A driver applicant must provide his/her Social Security Number on the application of a CDL; and

(2) The State must provide the Social Security Number to the CDLIS.

§383.155 Tamperproofing requirements.

States shall make the CDL tamperproof to the maximum extent practicable. At a minimum, a State shall use the same tamperproof method used for noncommercial drivers' licenses.

PART 384—STATE COMPLIANCE WITH COMMERCIAL DRIVER'S LICENSE PROGRAM

Subpart A—General

Sec.
384.101 Purpose and scope.
384.103 Applicability.
384.105 Definitions.

Subpart B—Minimum Standards for Substantial Compliance by States

384.201 Testing program.
384.202 Test standards.
384.203 Driving while under the influence.
384.204 CDL issuance and information.
384.205 CDLIS information.
384.206 State record checks.
384.207 Notification of licensing.
384.208 [Reserved]
384.209 Notification of traffic violations.
384.210 Limitation on licensing.
384.211 Return of old licenses.
384.212 Domicile requirement.
384.213 Penalties for driving without a proper CDL.
384.214 Reciprocity.
384.215 First offenses.
384.216 Second offenses.
384.217 Drug offenses.
384.218 Second serious traffic violation.
384.219 Third serious traffic violation.
384.220 National Driver Register information.
384.221 Out-of-service regulations (intoxicating beverage).
384.222—384.230 [Reserved]
384.231 Satisfaction of State disqualification requirement.
384.232 Required timing of record checks.

Subpart C—Procedures for Determining State Compliance

384.301 Substantial compliance—general requirement.
384.303 State certification for Federal fiscal year (FY) 1994.
384.305 State certifications for Federal fiscal years after FY 1994.

384.307 FHWA program reviews of State compliance.
384.309 Results of compliance determination.

Subpart D—Consequences of State Noncompliance

384.401 Withholding of funds based on noncompliance.
384.403 Period of availability; effect of compliance and noncompliance.

AUTHORITY: 49 U.S.C. 31136, 49 U.S.C. 31301 *et seq.*, 31502; 49 CFR 1.48.

SOURCE: 59 FR 26039, May 18, 1994, unless otherwise noted.

Subpart A—General

§ 384.101 Purpose and scope.

(a) *Purpose.* The purpose of this part is to ensure that the States comply with the provisions of section 12009(a) of the Commercial Motor Vehicle Safety Act of 1986 (49 U.S.C. 31311(a)).

(b) *Scope.* This part:

(1) Includes the minimum standards for the actions States must take to be in substantial compliance with each of the 22 requirements of 49 U.S.C. 31311(a);

(2) Establishes procedures for determinations to be made of such compliance by States; and

(3) Specifies the consequences of State noncompliance.

[62 FR 37152, July 11, 1997]

§ 384.103 Applicability.

The rules in this part apply to all States.

§ 384.105 Definitions.

(a) The definitions in part 383 of this title apply to this part, except where otherwise specifically noted.

(b) As used in this part:

Issue and *issuance* mean initial licensure, license transfers, license renewals, license upgrades, and nonresident commercial driver's licenses (CDLs), as described in § 383.73 of this title.

Licensing entity means the agency of State government that is authorized to issue drivers' licenses.

Year of noncompliance means any Federal fiscal year during which—

(1) A State fails to submit timely certification as prescribed in subpart C of this part; or

(2) The State does not meet one or more of the standards of subpart B of this part, based on a final determination by the FHWA under § 384.307(c) of this part.

Subpart B—Minimum Standards for Substantial Compliance by States

§ 384.201 Testing program.

The State shall adopt and administer a program for testing and ensuring the fitness of persons to operate commercial motor vehicles (CMVs) in accordance with the minimum Federal standards contained in part 383 of this title.

§ 384.202 Test standards.

No State shall authorize a person to operate a CMV unless such person passes a knowledge and driving skills test for the operation of a CMV in accordance with part 383 of this title.

§ 384.203 Driving while under the influence.

The State shall have in effect and enforce through licensing sanctions the disqualifications prescribed in § 383.51(b) at the 0.04 percent blood alcohol concentration level.

§ 384.204 CDL issuance and information.

(a) *General rule.* The State shall authorize a person to operate a CMV only by issuance of a CDL, unless a waiver under the provisions of § 383.7 applies, which contains, at a minimum, the information specified in part 383, subpart J, of this title.

(b) *Exceptions*—(1) *Training.* The State may authorize a person, who does not hold a CDL valid in the type of vehicle in which training occurs, to undergo behind-the-wheel training in a CMV only by means of a learner's permit issued and used in accordance with § 383.23(c) of this title.

(2) *Confiscation of CDL pending enforcement.* A State may allow a CDL holder whose CDL is held in trust by that State or any other State in the course of enforcement of the motor vehicle traffic code, but who has not been

convicted of a disqualifying offense under § 383.51 based on such enforcement, to drive a CMV while holding a dated receipt for such CDL.

§ 384.205 CDLIS information.

Before issuing a CDL to any person, the State shall, within the period of time specified in § 384.232, perform the check of the Commercial Driver's License Information System (CDLIS) in accordance with § 383.73(a)(3)(ii) of this title, and, based on that information, shall issue the license, or, in the case of adverse information, promptly implement the disqualifications, licensing limitations, denials, and/or penalties that are called for in any applicable section(s) of this subpart.

§ 384.206 State record checks.

(a) *Required checks*—(1) *Issuing State's records.* Before issuing a CDL to any person, the State shall, within the period of time specified in § 384.232, check its own driving record for such person in accordance with § 383.73(a)(3) of this title.

(2) *Other States' records.* Before initial or transfer issuance of a CDL to a person, the issuing State shall, within the period of time specified in § 384.232, obtain from any other State or jurisdiction which has issued a CDL to such person, and such other State(s) shall provide, all information pertaining to the driving record of such person in accordance with § 383.73(a)(3) of this title.

(b) *Required action.* Based on the findings of the State record checks prescribed in this section, the State shall issue the license, or, in the case of adverse information, promptly implement the disqualifications, licensing limitations, denials, and/or penalties that are called for in any applicable section(s) of this subpart.

§ 384.207 Notification of licensing.

Within the period defined in § 383.73(f) of this title, the State shall:

(a) Notify the operator of the CDLIS of each CDL issuance;

(b) Notify the operator of the CDLIS of any changes in driver identification information; and

(c) In the case of transfer issuances, implement the Change State of Record transaction, as specified by the operator of the CDLIS, in conjunction with the previous State of record and the operator of the CDLIS.

§ 384.208 [Reserved]

§ 384.209 Notification of traffic violations.

(a) *Required notification with respect to CDL holders.* Whenever a person who holds a CDL from another State is convicted of a violation, in any type of vehicle, of any State or local law relating to motor vehicle traffic control (other than a parking violation), the licensing entity of the State in which the conviction occurs shall notify the licensing entity of the person's State of licensure of the conviction as expeditiously as possible.

(b) *Required notification with respect to non-CDL holders.* Whenever a person who does not hold a CDL, but who is licensed to drive by another State, is convicted of a violation, in a CMV, of any State or local law relating to motor vehicle traffic control (other than a parking violation), the licensing entity of the State in which the conviction occurs shall notify the licensing entity of the person's State of licensure of such conviction.

§ 384.210 Limitation on licensing.

The State shall not knowingly issue a CDL to a person during a period in which:

(a) Such person is disqualified from operating a CMV, as disqualification is defined in § 383.5 of this title, or under the provisions of § 384.231(b)(2).

(b) Any type of driver's license held by such person is suspended, revoked, or canceled by the State or jurisdiction of licensure for driving related offenses which in the judgment of the licensing State are based on valid information; or

(c) Such person is subject to the penalties for false information contained in § 383.73(g) of this title.

§ 384.211 Return of old licenses.

The State shall not issue a CDL to a person who possesses a driver's license issued by another State or jurisdiction unless such person first surrenders the driver's license issued by such other State or jurisdiction in accordance

with §§383.71(a)(7) and (b)(4) of this title.

§ 384.212 Domicile requirement.

(a) The State shall issue CDLs only to those persons for whom such State is the State of domicile as defined in § 383.5 of this title; except that the State may issue a nonresident CDL under the conditions specified in §§383.23(b), 383.71(e), and 383.73(e) of this title.

(b) The State shall require any person holding a CDL issued by another State to apply for a transfer CDL from the State within 30 days after establishing domicile in the State, as specified in § 383.71(b) of this title.

§ 384.213 Penalties for driving without a proper CDL.

The State shall impose civil and criminal penalties for operating a CMV while not possessing a CDL that is valid for the type of CMV being driven; while having a driver's license suspended, revoked, or canceled; or while being disqualified from operating a CMV. In determining the appropriateness of such penalties, the State shall consider their effectiveness in deterring this type of violation. The State shall impose penalties on CMV drivers that are at least as stringent as those imposed on noncommercial drivers for the same or analogous offenses.

§ 384.214 Reciprocity.

The State shall allow any person to operate a CMV in the State who is not disqualified from operating a CMV and who holds a CDL which is—

(a) Issued to him or her by any other State or jurisdiction in accordance with part 383 of this title;

(b) Not suspended, revoked, or canceled; and

(c) Valid, under the terms of part 383, subpart F, of this title, for the type of vehicle being driven.

§ 384.215 First offenses.

(a) *General rule.* The State shall disqualify from operating a CMV each person who is convicted, as defined in § 383.5 of this title, in any State or jurisdiction, of a disqualifying offense specified in § 383.51(b)(2) (i) through (iv) of this title, for no less than one year.

(b) *Special rule for hazardous materials offenses.* If the offense under paragraph (a) of this section occurred while the driver was operating a vehicle transporting hazardous materials required to be placarded under the Hazardous Materials Transportation Act (implementing regulations at 49 CFR 177.823), the State shall disqualify the person for no less than three years.

§ 384.216 Second offenses.

(a) *General rule.* The State shall disqualify for life from operating a CMV each person who is convicted, as defined in § 383.5 of this title, in any State or jurisdiction, of a subsequent offense as described in § 383.51(b)(3)(iv) of this title.

(b) *Special rule for certain lifetime disqualifications.* The State where the disqualified driver resides after 10 years of disqualification have elapsed may reduce the lifetime disqualification of a person disqualified for life under § 383.51(b)(3)(iv) of this title, to a minimum of ten years in accordance with § 383.51(b)(3)(v) of this title.

§ 384.217 Drug offenses.

The State shall disqualify from operating a CMV for life each person who is convicted, as defined in § 383.5 of this title, in any State or jurisdiction, of using a CMV in the commission of a felony described in §§383.51(b)(2)(v) and 383.51(b)(3)(iii) of this title. The State shall not apply the special rule in § 384.216(b) to lifetime disqualifications imposed for controlled substance felonies as detailed in §§383.51(b)(2)(v) and 383.51(b)(3)(iii) of this title.

§ 384.218 Second serious traffic violation.

The State shall disqualify from operating a CMV for a period of not less than 60 days each person who, in a three-year period, is convicted, as defined in § 383.5 of this title, in any State(s) or jurisdiction(s), of two serious traffic violations involving a CMV operated by such person, as specified in §§383.51(c)(1) and 383.51(c)(2)(i) of this title.

§ 384.219 Third serious traffic violation.

The State shall disqualify from operating a CMV for a period of not less than 120 days each person who, in a three-year period, is convicted, as defined in § 383.5 of this title, in any State(s) or jurisdiction(s), of three serious traffic violations involving a CMV operated by such person, as specified in §§ 383.51 (c)(1) and (c)(2)(ii) of this title. This disqualification period shall be in addition to any other previous period of disqualification.

§ 384.220 National Driver Register information.

Before issuing a CDL to any person, the State shall, within the period of time specified in § 384.232, perform the check of the National Driver Register in accordance with § 383.73(a)(3)(iii) of this title, and, based on that information, promptly implement the disqualifications, licensing limitations, and/or penalties that are called for in any applicable section(s) of this subpart.

§ 384.221 Out-of-service regulations (intoxicating beverage).

The State shall adopt, and enforce on operators of CMVs as defined in §§ 383.5 and 390.5 of this title, the provisions of § 392.5 (a) and (c) of this title in accordance with the Motor Carrier Safety Assistance Program as contained in 49 CFR part 350 and applicable policy and guidelines.

§§ 384.222—384.230 [Reserved]

§ 384.231 Satisfaction of State disqualification requirement.

(a) *Applicability*. The provisions of §§ 384.203, 384.206(b), 384.210, 384.213, 384.215 through 384.219, 384.221, and 384.231 apply to the State of licensure of the person affected by the provision. The provisions of § 384.210 also apply to any State to which a person makes application for a transfer CDL.

(b) *Required action*—(1) *CDL holders.* A State shall satisfy the requirement of this part that the State disqualify a person who holds a CDL by, at a minimum, suspending, revoking, or canceling the person's CDL for the applicable period of disqualification.

(2) *Non-CDL holders applies on and after May 18, 1997.* A State shall satisfy the requirement of this subpart that the State disqualify a non-CDL holder who is convicted of an offense or offenses necessitating disqualification under § 383.51 by, at a minimum, implementing the limitation on licensing provisions of § 384.210 and the timing and recordkeeping requirements of paragraphs (c) and (d) of this section so as to prevent such non-CDL holder from legally obtaining a CDL from any State during the applicable disqualification period(s) specified in this subpart.

(c) *Required timing.* The State shall disqualify a driver as expeditiously as possible.

(d) *Recordkeeping requirements.* The State shall maintain such driver records and cause such driver identification data to be retained on the CDLIS as the operator of the CDLIS specifies are necessary to the implementation and enforcement of the disqualifications called for in §§ 384.215 through 384.219.

[59 FR 26039, May 18, 1994, as amended at 60 FR 57545, Nov. 16, 1995]

§ 384.232 Required timing of record checks.

The State shall perform the record checks prescribed in §§ 384.205, 384.206, and 384.220, no earlier than 10 days prior to issuance for licenses issued before October 1, 1995. For licenses issued after September 30, 1995, the State shall perform the record checks no earlier than 24 hours prior to issuance if the license is issued to a driver who does not currently possess a valid CDL from the same State and no earlier than 10 days prior to issuance for all other drivers.

Subpart C—Procedures for Determining State Compliance

§ 384.301 Substantial compliance—general requirement.

To be in substantial compliance with 49 U.S.C. 31311(a), a State must meet each and every standard of subpart B of this part by means of the demonstrable combined effect of its statutes, regulations, administrative procedures and practices, organizational structures,

internal control mechanisms, resource assignments (facilities, equipment, and personnel), and enforcement practices.

[62 FR 37152, July 11, 1997]

§ 384.303 State certification for Federal fiscal year (FY 1994) 1994.

(a) *FY 1994 certification requirement.* Prior to July 18, 1994, each State shall review its compliance with this part and certify to the Federal Highway Administrator as prescribed in paragraph (b) of this section. The certification shall be submitted as a signed original and four copies to the State Director or Officer-in-Charge, Office of Motor Carriers, Federal Highway Administration, located in that State.

(b) *FY 1994 certification content.* The certification shall consist of a statement signed by the Governor of the State, or by an official designated by the Governor, and reading as follows:

I (name of certifying official), (position title), of the State (Commonwealth) of _____, do hereby certify that the State (Commonwealth) is in substantial compliance with all requirements of 49 U.S.C. app. 2708(a), as defined in 49 CFR 384.301, and contemplates no changes in statutes, regulations, or administrative procedures, or in the enforcement thereof, which would affect such substantial compliance through [the last date of the current Federal fiscal year].

(Approved by the Office of Management and Budget under control number 2125–0542)

§ 384.305 State certifications for Federal fiscal years after FY 1994.

(a) *Certification requirement.* Prior to January 1 of each Federal fiscal year after FY 1994, each State shall review its compliance with this part and certify to the Federal Highway Administrator as prescribed in paragraph (b) of this section. The certification shall be submitted as a signed original and four copies to the State Director or Officer-in-Charge, Office of Motor Carriers, Federal Highway Administration, located in that State.

(b) *Certification content.* The certification shall consist of a statement signed by the Governor of the State, or by an official designated by the Governor, and reading as follows: ''I (name of certifying official), (position title), of the State (Commonwealth) of _____, do hereby certify that the State (Commonwealth) has continuously been in substantial compliance with all requirements of 49 U.S.C. 31311(a), as defined in 49 CFR 384.301, since [the first day of the current Federal fiscal year], and contemplates no changes in statutes, regulations, or administrative procedures, or in the enforcement thereof, which would affect such substantial compliance through [the last date of the current Federal fiscal year].''

(Approved by the Office of Management and Budget under control number 2125–0542)

[59 FR 26039, May 18, 1994, as amended at 62 FR 37152, July 11, 1997]

§ 384.307 FHWA program reviews of State compliance.

(a) *FHWA program reviews.* Each State's CDL program shall be subject to review to determine whether or not the State meets the general requirement for substantial compliance in § 384.301. The State shall cooperate with and provide information in conjunction with any program reviews under this section.

(b) *Preliminary FHWA determination and State response.* If, after review, a preliminary determination is made that a State does not meet one or more of the standards of subpart B of this part, the State will be informed accordingly prior to July 1 of the fiscal year in which the preliminary determination is made. The State will have up to thirty calendar days to respond to the preliminary determination. Upon request by the State, an informal conference will be provided during this time.

(c) *Final FHWA determination.* If, after reviewing any timely response by the State to the preliminary determination, a final determination is made that the State is not in compliance with the affected standard, the State will be notified of the final determination.

§ 384.309 Results of compliance determination.

(a) A State shall be determined not substantially in compliance with 49 U.S.C. 31311(a) for any fiscal year in which it:

(1) Fails to submit the certification as prescribed in this subpart; or

(2) Does not meet one or more of the standards of subpart B of this part, as established in a final determination by the FHWA under §384.307(c).

(b) A State shall be in substantial compliance with 49 U.S.C. 31311(a) for any fiscal year in which neither of the eventualities in paragraph (a) of this section occurs.

[62 FR 37152, July 11, 1997]

Subpart D—Consequences of State Noncompliance

§384.401 Withholding of funds based on noncompliance.

(a) *Following first year of noncompliance.* An amount equal to five percent of the funds required to be apportioned to any State under each of sections 104(b)(1), 104(b)(3), and 104(b)(5) of title 23, U.S.C., shall be withheld on the first day of the fiscal year following such State's first year of noncompliance under this part.

(b) *Following second and subsequent year(s) of noncompliance.* An amount equal to ten percent of the funds required to be apportioned to any State under each of sections 104(b)(1), 104(b)(3), and 104(b)(5) of title 23, U.S.C., shall be withheld on the first day of the fiscal year following such State's second or subsequent year of noncompliance under this part.

§384.403 Period of availability; effect of compliance and noncompliance.

(a) *Period of availability*—(1) *Funds withheld on or before September 30, 1995.* Any funds withheld under this subpart from apportionment to any State on or before September 30, 1995, shall remain available for apportionment to such State as follows:

(i) If such funds would have been apportioned under 23 U.S.C. 104(b)(5)(B) but for the provisions of this subpart, such funds shall remain available until the end of the second fiscal year following the fiscal year for which such funds are authorized to be appropriated.

(ii) If such funds would have been apportioned under 23 U.S.C. 104(b)(1) or 104(b)(3) but for the provisions of this subpart, such funds shall remain available until the end of the third fiscal year following the fiscal year for which such funds are authorized to be appropriated.

(2) *Funds withheld after September 30, 1995.* No funds withheld under this subpart from apportionment to any State after September 30, 1995, shall be available for apportionment to such State.

(b) *Apportionment of withheld funds after compliance.* If, before September 10 of the last fiscal year for which funds withheld under this subpart from apportionment are to remain available for apportionment to a State under paragraph (a) of this section, the State makes the certification called for in §384.305 and a determination is made that the State has met the standards of subpart B of this part for a period of 365 days and continues to meet such standards, the withheld funds remaining available for apportionment to such State shall be apportioned to the State on the day following the last day of such fiscal year.

(c) *Period of availability of subsequently apportioned funds.* Any funds apportioned pursuant to paragraph (b) of this section shall remain available for expenditure until the end of the third fiscal year succeeding the fiscal year in which such funds are apportioned. Sums not obligated at the end of such period shall lapse or, in the case of funds apportioned under 23 U.S.C. 104(b)(5), shall lapse and be made available by the Secretary for projects in accordance with 23 U.S.C. 118(b).

(d) *Effect of noncompliance.* If, at the end of the period for which funds withheld under this subpart from apportionment are available for apportionment under paragraph (a) of this section, the State has not met the standards of subpart B of this part for a 365-day period, such funds shall lapse or, in the case of funds apportioned under 23 U.S.C. 104(b)(5), shall lapse and be made available by the Secretary for projects in accordance with 23 U.S.C. 118(b).

PART 385—SAFETY FITNESS PROCEDURES

Sec.

385.1 Purpose and scope.
385.3 Definitions.

385.5 Safety fitness standard.
385.7 Factors to be considered in determining a safety rating.
385.9 Determination of a safety rating.
385.11 Notification of a safety rating.
385.13 Unsatisfactory safety rating—Prohibition on transportation of hazardous materials and passengers.
385.15 Request for a change in a safety rating; facts and procedure.
385.17 Request for a change in a safety rating; corrective action taken.
385.19 Safety fitness information.
385.21 Motor carrier identification report.
385.23 Failure to report.

APPENDIX A TO PART 385—FORM MCS–150, MOTOR CARRIER IDENTIFICATION REPORT
APPENDIX B TO PART 385—SAFETY RATING PROCESS

AUTHORITY: 49 U.S.C. 104, 504, 521(b)(5)(A), 5113, 31136, 31144, 31502; and 49 CFR 1.48.

SOURCE: 53 FR 50968, Dec. 19, 1988, unless ohterwise noted.

§ 385.1 Purpose and scope.

(a) This part establishes procedures to determine the safety fitness of motor carriers, to assign safety ratings, to take remedial action when required, and to prohibit motor carriers receiving a safety rating of ''unsatisfactory'' from operating a commercial motor vehicle:

(1) To provide transportation of hazardous materials for which vehicle placarding is required in accordance with part 172, subpart F of this title; or

(2) To transport more than 15 passengers, including the driver.

(b) The provisions of this part apply to all motor carriers subject to the requirements of this subchapter.

[56 FR 40805, Aug. 16, 1991]

§ 385.3 Definitions.

Applicable safety regulations or requirements means 49 CFR subtitle B, chapter III, Subchapter B—Federal Motor Carrier Safety Regulations; and 49 CFR subtitle B, chapter I, Subchapter C—Hazardous Materials Regulations.

Commercial motor vehicle shall have the same meaning as described in § 390.5 of this subchapter.

Preventable accident on the part of a motor carrier means an accident (1) that involved a commercial motor vehicle, and (2) that could have been averted but for an act, or failure to act, by the motor carrier or the driver.

Reviews. For the purposes of this part:

(1) *Compliance review* means an on-site examination of motor carrier operations, such as drivers' hours of service, maintenance and inspection, driver qualification, commercial drivers license requirements, financial responsibility, accidents, hazardous materials, and other safety and transportation records to determine whether a motor carrier meets the safety fitness standard. A compliance review may be conducted in response to a request to change a safety rating, to investigate potential violations of safety regulations by motor carriers, or to investigate complaints or other evidence of safety violations. The compliance review may result in the initiation of an enforcement action.

(2) *Safety review* means an on-site assessment to determine if a motor carrier has adequate safety management controls in place and functioning to meet the safety fitness standard. The safety review includes an inspection of selected motor carrier records and operations. It is used to gather information for assigning ratings to unrated carriers. The safety review is not ordinarily employed to gather evidence in support of enforcement actions, but will if certain serious violations are discovered (e.g., absence of proof of financial responsibility; document falsification).

(3) *Safety management controls* means the systems, policies programs, practices, and procedures used by a motor carrier to ensure compliance with applicable safety and hazardous materials regulations which ensure the safe movement of products and passengers through the transportation system, and to reduce the risk of highway accidents and hazardous materials incidents resulting in fatalities, injuries, and property damage.

Safety ratings: (1) *Satisfactory safety rating* means that a motor carrier has in place and functioning adequate safety management controls to meet the safety fitness standard prescribed in § 385.5. Safety management controls are adequate if they are appropriate for the size and type of operation of the particular motor carrier.

(2) *Conditional safety rating* means a motor carrier does not have adequate safety management controls in place to ensure compliance with the safety fitness standard that could result in the occurrences listed in §385.5 (a) through (h).

(3) *Unsatisfactory safety rating* means a motor carrier does not have adequate safety management controls in place to ensure compliance with the safety fitness standard which has resulted in occurrences listed in §385.5 (a) through (h). Motor carriers receiving an ''unsatisfactory safety rating'' may be subject to the provisions of §385.13.

(4) *Unrated carrier* means that a safety rating has not been assigned to the motor carrier by the FHWA.

[53 FR 50968, Dec. 19, 1988, as amended at 56 FR 40805, Aug. 16, 1991]

§385.5 Safety fitness standard.

The satisfactory safety rating is based on the degree of compliance with the safety fitness standard for motor carriers. To meet the safety fitness standard, the motor carrier shall demonstrate that it has adequate safety management controls in place, which function effectively to ensure acceptable compliance with applicable safety requirements to reduce the risk associated with:

(a) Commercial driver's license standard violations (part 383),

(b) Inadequate levels of financial responsibility (part 387),

(c) The use of unqualified drivers (part 391),

(d) Improper use and driving of motor vehicles (part 392),

(e) Unsafe vehicles operating on the highways (part 393),

(f) Failure to maintain accident registers and copies of accident reports (part 390),

(g) The use of fatigued drivers (part 395),

(h) Inadequate inspection, repair, and maintenance of vehicles (part 396),

(i) Transportation of hazardous materials, driving and parking rule violations (part 397),

(j) Violation of hazardous materials regulations (parts 170 through 177), and

(k) Motor vehicle accidents and hazardous materials incidents.

[53 FR 50968, Dec. 19, 1988, as amended at 58 FR 33776, June 21, 1993]

§385.7 Factors to be considered in determining a safety rating.

The factors to be considered in determining the safety fitness and assigning a safety rating include information from safety reviews, compliance reviews and any other data. The factors may include all or some of the following:

(a) Adequacy of safety management controls. The adequacy of controls may be questioned if their degree of formalization, automation, etc., is found to be substantially below the norm for similar carriers. Violations, accidents or incidents substantially above the norm for similar carriers will be strong evidence that management controls are either inadequate or not functioning properly.

(b) Frequency and severity of regulatory violations.

(c) Frequency and severity of driver/vehicle regulatory violations identified in roadside inspections.

(d) Number and frequency of out-of-service driver/vehicle violations.

(e) Increase or decrease in similar types of regulatory violations discovered during safety or compliance reviews.

(f) Frequency of accidents; hazardous materials incidents; accident rate per million miles; preventable accident rate per million miles; and other accident indicators; and whether these accident and incident indicators have improved or deteriorated over time.

(g) The number and severity of violations of state safety rules, regulations, standards, and orders applicable to commercial motor vehicles and motor carrier safety that are compatible with Federal rules, regulations, standards, and orders.

[53 FR 50968, Dec. 19, 1988, as amended at 58 FR 33776, June 21, 1993]

§385.9 Determination of a safety rating.

(a) Following a safety or compliance review of a motor carrier operation, the FHWA, using the factors prescribed in §385.7, shall determine whether the

present operations of the motor carrier are consistent with the safety fitness standard set forth in § 385.5, and assign a safety rating accordingly.

(b) Unless otherwise specifically provided in this chapter, a safety rating will be issued to a motor carrier within 30 days following the completion of a compliance review.

[53 FR 50968, Dec. 19, 1988, as amended at 62 FR 28809, May 28, 1997]

EFFECTIVE DATE NOTE: At 62 FR 28809, May 28, 1997, in § 385.9, the existing text was designated as paragraph (a), and a new paragraph (b) was added, effective May 28, 1997 until Nov. 28, 1997.

§ 385.11 Notification of a safety rating.

(a) The FHWA shall provide written notification to the motor carrier of the assigned safety rating.

(b) Notification of a ''conditional'' or ''unsatisfactory'' rating will include a list of those items for which immediate corrective action must be taken.

(c) A notification of an ''unsatisfactory'' safety rating will also include a notice that the motor carrier will be subject to the provisions of § 385.13, which prohibit motor carriers rated ''unsatisfactory'' from transporting:

(1) Hazardous materials requiring placarding under part 172, subpart F, of this title; or

(2) 15 or more passengers, including the driver.

[56 FR 40806, Aug. 16, 1991]

§ 385.13 Unsatisfactory safety rating—Prohibition on transportation of hazardous materials and passengers.

(a)(1) A motor carrier that receives a safety rating from the Federal Highway Administration which is ''unsatisfactory'' shall have 45 calendar days from the effective date of that rating or from the date of notice of that rating, whichever is later, to take such action as may be necessary to improve such safety rating to ''conditional'' or ''satisfactory.''

(2) *Prohibition on transportation.* After the last day of the 45-day period established pursuant to paragraph (a)(1) of this section and until notification is issued pursuant to this part of either a ''conditional'' or ''satisfactory'' safety rating, a motor carrier rated ''unsatisfactory'' shall be prohibited from operating a commercial motor vehicle to transport—

(i) Hazardous materials for which vehicle placarding is required pursuant to this title; or

(ii) More than 15 passengers, including the driver.

(3) *Ineligibility for Federal Government transportation.* Any motor carrier that receives a safety rating of ''unsatisfactory'' shall be ineligible to contract or subcontract with any Federal agency for the transportation of—

(i) Hazardous materials for which vehicle placarding is required pursuant to this title; or

(ii) More than 15 passengers, including the driver.

(b) *Penalties.* Any motor carrier that operates commercial motor vehicles in violation of this section will be subject to the penalty provisions of 49 U.S.C. App. 1809 and 49 U.S.C. 521.

[56 FR 40806, Aug. 16, 1991]

§ 385.15 Request for a change in a safety rating; facts and procedure.

(a) A petition for review of a safety rating, where there are factual or procedural disputes, must list all issues in dispute and be accompanied by any information or documents the motor carrier is relying upon as the basis for its petition.

(b)(1) The petition must be submitted to the Director, Office of Motor Carrier Field Operations, within 90 days of the date of notification of the assignment, or change, of a safety rating.

(2) Motor carriers affected by the provisions of § 385.13 should submit their petitions and supporting documentation to the Director, Office of Motor Carrier Field Operations, within 15 days from the date of notification of the assignment of a safety rating.

(c) As part of the consideration of a petition, the Director, Office of Motor Carrier Field Operations, may request the motor carrier to submit additional data and attend a conference to discuss the safety rating. Failure to provide such data or to attend the conference may result in dismissal of the petition.

(d) The Director, Office of Motor Carrier Field Operations, shall notify the motor carrier in writing of a decision

on a petition for review of a safety rating, which will constitute the final agency action. The decision may:

(1) Confirm the rating; or

(2) Revise the rating.

[56 FR 40806, Aug. 16, 1991]

§385.17 Request for a change in a safety rating; corrective action taken.

(a) A request for a change in a safety rating may be made when the basis for the change is evidence that corrective actions have been taken and that operations currently meet the safety fitness standard specified in §385.5. The request shall be directed in writing, via certified mail, to the Regional Director of Motor Carriers for the FHWA Region in which the motor carrier maintains its principal place of business for safety. The Regional Office addresses are listed in §390.27 of this subchapter. Such a request shall include a written description of corrective actions taken and other documentation that may be relied upon as a basis for improving the assigned rating.

(b) The FHWA will make its determination based upon documentation submitted or any additional investigation deemed necessary.

(c) In cases where the FHWA is unable to make a determination within the 45-day period established in §385.13 and the motor carrier has submitted evidence that corrective actions have been taken pursuant to paragraph (a) of this section, and has cooperated in any investigation, the FHWA may conditionally suspend the effective date of the ''unsatisfactory'' safety rating for an additional period of up to 10 days.

[56 FR 40806, Aug. 16, 1991, as amended at 61 FR 1843, Jan. 24, 1996]

§385.19 Safety fitness information.

(a) Safety rating information on motor carriers will be made available to all Federal agencies telephonically or by remote computer terminals.

(b) The safety rating assigned to a motor carrier will be made available to the public upon request. Any person requesting the assigned rating of a motor carrier should provide the FHWA with the motor carrier name, principal office address, and the ICC assigned docket number, or the U.S. DOT identification number.

(c) Requests should be addressed to: OMC—Safety Rating, P.O. Box 13028, Arlington, Virginia 22219.

(d) Oral requests by telephone will be accepted and may be made by calling (703) 276–6876. Oral requests made by telephone will be sent a written response if so requested.

[56 FR 51344, Oct. 11, 1991]

§385.21 Motor carrier identification report.

(a) All motor carriers currently conducting operations in interstate or foreign commerce shall file a Motor Carrier Identification Report, Form MCS–150, within 90 days after the effective date of this rule. Exception: The provisions of this section do not apply to a motor carrier that has received written notification of a safety rating from the FHWA.

(b) All motor carriers beginning operation after the effective date of this rule shall file the Motor Carrier Identification Report, Form MCS–150, within 90 days after beginning operations.

(c) The Motor Carrier Identification Report, Form MCS–150, is available from all FHWA region and division motor carrier safety offices nationwide and from FHWA Office of Motor Carrier Information Management and Analysis, 400 Seventh Street, SW., Washington, DC 20590.

(d) The completed Motor Carrier Identification Report, Form MCS–150, shall be filed with the FHWA, Office of Motor Carrier Information Management and Analysis, 400 Seventh Street, SW., Washington, DC 20590.

§385.23 Failure to report.

Failure by a motor carrier to file a Motor Carrier Identification Report, Form MCS–150, pursuant to the provisions of §385.21, or furnishing misleading information or making false statements upon the MCS–150 shall subject the offender to the penalties prescribed in title 49, United States Code, 522(b).

[53 FR 50968, Dec. 19, 1988, as amended at 60 FR 38743, July 28, 1995]

APPENDIX A TO PART 385—FORM MCS–150, MOTOR CARRIER IDENTIFICATION REPORT

(Approved by OMB under control number 2125–0544)

OMB No. 2125-0544

US Department of Transportation
Federal Highway Administration

MOTOR CARRIER IDENTIFICATION REPORT

IF THE ABOVE LOCATION IS BLANK, INCORRECT, OR IS A DIVISION OR BRANCH, PLEASE IDENTIFY YOUR COMPANY'S PRINCIPAL OFFICE IN THE SPACE BELOW.

1. NAME OF MOTOR CARRIER
2. DBA NAME

PHYSICAL ADDRESS

3. STREET ADDRESS/ROUTE NUMBER
4. CITY
5. COUNTY
6. STATE
7. ZIP CODE + 4

8. PRINCIPAL PHONE NUMBER ( ) _____ - _____
9. ICC DOCKET NUMBER MC _____
10. USDOT NUMBER USDOT _____
11. OPERATION CLASSIFICATION
A. Authorized For Hire B. Exempt For Hire C. Private
D. Migrant E. U.S. Mail F. Other _____

12. CARGO CLASSIFICATIONS: *(Please circle all that apply)*

A. General Freight	H. Mobile Homes	O. Livestock	V. Commodities Dry Bulk
B. Household Goods	I. Machinery, Large Objects	P. Grain, Feed, Hay	W. Refrigerated Food
C. Metal: Sheets, Coils, Rolls	J. Fresh Produce	Q. Coal/Coke	X. Beverages
D. Motor Vehicles	K. Liquids/Gases	R. Meat	Y. Paper Products
E. Driveaway/Towaway	L. Intermodal Containers	S. Garbage, Refuse, Trash	Z. Other *(Specify)*
F. Logs, Poles, Beams, Lumber	M. Passengers	T. U.S. Mail	
G. Building Materials	N. Oilfield Equipment	U. Chemicals	_____

13. CARRIER OPERATION
A. Interstate
B. Intrastate Only—HazMat.
C. Intrastate Only—Non-HazMat.

14. HAZARDOUS MATERIALS CARRIED *(Please circle all that apply)* (T)—*In Cargo Tanks* (P)—*In Packages*

A. Explosives A	T	P	H. Corrosives	T	P	O. Irritating Material	T	P
B. Explosives B	T	P	I. Oxidizers	T	P	P. 'ORM' Material	T	P
C. Explosives C	T	P	J. Poison A	T	P	Q. Hazardous Waste	T	P
D. Flammable Liquid	T	P	K. Poison B	T	P	R. Etiological Agent	T	P
E. Flammable Solid	T	P	L. Combustible Liquid	T	P	S. Blasting Agent	T	P
F. Flammable Gas	T	P	M. Radioactive Material	T	P	T. Hazardous Substance	T	P
G. Non-flammable Gas	T	P	N. Organic Peroxide	T	P	U. Cryogenics	T	P

15. EQUIPMENT	Straight Trucks	Truck Tractors	Trailers	HazMat Cargo Tank Trailers	HazMat Cargo Tank Trucks	Buses
OWNED						
TERM LEASED						
TRIP LEASED						

16. DRIVERS SUBJECT TO FMCSR
100 Mile Radius _____
Beyond 100 Mile Radius _____
TOTAL _____

17. CERTIFICATION STATEMENT *(to be completed by an authorized official)*

I, _____ *(please print name)*, certify that I am familiar with the Federal Motor Carrier Safety Regulations. Under penalties of perjury, I declare that the information entered on this report is, to the best of my knowledge and belief, true, correct and complete.

Signature _____ Date _____ Title _____

Form MCS-150 (7-90)

NOTICE

The Form MCS–150, Motor Carrier Identification Report, must be filed by all motor carriers operating in interstate or foreign commerce. A new motor carrier must file Form MCS–150 within 90 days after beginning operations. Exception: A motor carrier that has received written notification of a safety rating from the Federal Highway Administration (FHWA) need not file the report. To mail, fold the completed report so that the self-addressed postage paid panel is on the outside. This report is required by 49 CFR Part 385 and authorized by 49 U.S.C. 504 (1982 & Supp. III 1985).

The public reporting burden for this collection of information on the Form MCS–150 is estimated by the FHWA to average 20 minutes. If you wish to comment on the accuracy of the estimate or make suggestions for reducing this burden, please direct your comments to Office of Management and Budget and the FHWA at the following addresses:

Office of Management and Budget, Paperwork Reduction Project, Washington, DC 20503

and

Federal Highway Administration, Office of Motor Carrier Field Operations, HFO–10, 400 7th Street, SW, Washington, DC 20590

INSTRUCTIONS FOR COMPLETING THE MOTOR CARRIER IDENTIFICATION REPORT (MCS–150)

(Please Print or Type All Information)

1. Enter the name of the business entity (i.e. corporation, partnership, or individual) that owns and controls the motor carrier operation.
2. If the business entity is operating under a name other than that in Block 1, i.e. ''trade name'', enter that name. Otherwise, leave blank.
3. Enter the principal place of business (where all safety records are maintained) street address.
4. Enter the city where the principal place of business is located.
5. Enter the name of the county in which the principal place of business is located.
6. Enter the two-letter postal abbreviation for the State, or the name of the Canadian Province or Mexican State, in which the principal place of business is located.
7. Enter the zip code number corresponding with the street address.
8. Enter the telephone number including area code of the principal place of business.
9. Enter the motor carrier 'MC' number under which the Interstate Commerce Commission (ICC) issued your operating authority, if appropriate. Otherwise, enter ''N/A.''
10. Enter the identification number assigned to your motor carrier operation by the U.S. Department of Transportation, if known. Otherwise, enter ''unknown.''
11. Circle appropriate classification. Circle all that apply. If F ''other'' is circled, enter the type of operation in the space provided.

A. Authorized For Hire
B. Exempt For Hire
C. Private
D. Migrant
E. U.S. Mail
F. Other _____

Authorized For Hire— transportation for compensation as a common or contract carrier of property, owned by others, or passengers under the provisions of the ICC.

Exempt For Hire— transportation for compensation of property exempt from the economic regulation by the ICC.

Private— transportation of property, owned or leased by the motor carrier, in furtherance of a commercial enterprise other than for-hire transportation.

Migrant— interstate transportation, including a contract carrier, but not a common carrier of 3 or more migrant workers to or from their employment by any motor vehicle other than a passenger automobile or station wagon.

U.S. Mail— transportation of U.S. Mail under contract with the U.S. Postal Service.

12. Circle the letter of the types of cargo you usually transport. If Z ''other,'' is circled enter the name of the commodity in the space provided.
13. Circle the appropriate type of operation.

A. Interstate
B. Intrastate, transporting hazardous materials (49 CFR 100–178)
C. Intrastate, NOT transporting hazardous materials.

Interstate— transportation of persons or property across State lines, *including international boundaries*, or wholly within one State as part of a through movement that originates or terminates in another State or country.

Intrastate— transportation of persons or property wholly within one State.

14. Circle the letter of *all* of the types of hazardous materials (HM) you transport. In the columns following the HM types, either circle *T* if the HM is transported in cargo tanks or *P* if the HM is transported in other packages.
15. Enter the total number of vehicles owned, term leased and trip leased, that are, or can be, operational the day this form is completed.
16. Enter the number of drivers used on an average work day. Part-time, casual, term leased, trip leased and company drivers are to be included.

100 mile radius driver— a driver that operates within a *100 air-mile radius* of the normal work reporting location.

17. Print or type the name, in the space provided, of the individual authorized to sign documents on behalf of the entity listed in Block 1. That individual must sign, date, and show his or her title in the spaces provided. (Certification Statement, see 49 CFR 385.21 and 385.23)

[56 FR 5365, Feb. 11, 1991]

APPENDIX B TO PART 385—SAFETY RATING PROCESS

Section 215 of the Motor Carrier Safety Act of 1984 (49 U.S.C. 31144) directed the Secretary of Transportation to establish a procedure to determine the safety fitness of owners and operators of commercial motor vehicles operating in interstate or foreign commerce. The Secretary, in turn, delegated this responsibility to the Federal Highway Administration (FHWA).

As directed, FHWA promulgated a safety fitness regulation, Safety Fitness Procedures, which established a procedure to determine the safety fitness of motor carriers through the assignment of safety ratings and established a safety fitness standard which a motor carrier must meet to obtain a *satisfactory* safety rating.

To meet the safety fitness standard, a motor carrier must demonstrate to FHWA that it has adequate safety management controls in place which function effectively to ensure acceptable compliance with the applicable safety requirements. A ''safety fitness rating methodology'' (SFRM) was developed by FHWA, which uses data from onsite reviews to rate motor carriers.

The safety rating process developed by FHWA's Office of Motor Carriers is used to:

1. Evaluate safety fitness and assign one of three safety ratings (*satisfactory, conditional* or *unsatisfactory*) to motor carriers operating in interstate commerce. This process conforms with 49 CFR 385.5—Safety fitness standard and §385.7—Factors to be considered in determining a safety rating.

2. Identify motor carriers needing improvement in their compliance with the Federal Motor Carrier Safety Regulations (FMCSRs) and applicable Hazardous Material Regulations (HMRs). These are carriers rated *unsatisfactory* or *conditional.*

SOURCE OF DATA FOR RATING METHODOLOGY

The FHWA's rating process is built upon the operational tool known as the compliance review (CR). This tool was developed to assist Federal and State safety specialists in gathering pertinent motor carrier compliance and accident information.

The CR is an in-depth examination of a motor carrier's operations and is used (1) to rate unrated motor carriers, (2) to conduct a follow-up investigation on motor carriers rated *unsatisfactory or conditional* as a result of a previous review, (3) to investigate complaints, or (4) in response to a request by a motor carrier to reevaluate its safety rating. Documents such as those contained in driver qualification files, records of duty status and vehicle maintenance records are thoroughly examined for compliance with the FMCSRs and HMRs. Violations are cited on the CR document. Performance based information, when available, is utilized to evaluate the carrier's compliance with the vehicle regulations. Recordable preventable accident information is also collected.

CONVERTING CR INFORMATION INTO A SAFETY RATING

The FHWA gathers information through an in-depth examination of the motor carrier's compliance with portions of the FMCSRs and HMRs which have been identified as ''acute'' or ''critical'' regulations.

Acute regulations are those so essential that noncompliance is obvious and requires immediate corrective actions by a motor carrier regardless of its overall safety posture. An example of an acute regulation is §383.37(b)—Allowing, requiring, permitting, or authorizing an employee with more than one Commercial Driver's License (CDL) to operate a commercial motor vehicle. Noncompliance with §383.37(b) is usually discovered when the motor carrier's driver qualification file reflects that the motor carrier had knowledge of a driver with more than one CDL, and still permitted the driver to operate a commercial motor vehicle. If the motor carrier did not have knowledge or could not reasonably be expected to have knowledge, then a violation would not be cited.

Critical regulations are those which relate directly to management and/or operational controls. Noncompliance with those regulations is indicative of a breakdown in a carrier's management controls. An example of a critical regulation is §395.3(a)(1)—Requiring or permitting a driver to drive more than 10 hours.

The list of the acute and critical regulations used in determining safety ratings is provided at the end of this document.

Noncompliance with acute regulations and patterns of noncompliance with critical regulations are quantitatively linked to inadequate safety management controls and usually higher than average rates of recordable preventable accidents. The FHWA has used noncompliance with acute regulations and patterns of noncompliance with critical regulations since 1989 to determine motor carriers' adherence to the §385.5—Safety fitness standard. Compliance with the regulatory factors, (1) [Parts 387, & 390]; (2) [Parts 382, 383 & 391]; (3) [Parts 392 & 395]; (4) [Parts 393

& 396, when there are *less* than three vehicle inspections in the last 12 months to evaluate]; and (5) [Parts 397, 171, 177 & 180], will be evaluated as follows:

For each instance of noncompliance with an acute regulation or each pattern of noncompliance with a critical regulation documented during the CR, one point will be assessed. A pattern is more than one violation. When large numbers of documents are reviewed the number of violations required to meet a pattern is equal to at least 10 percent of those examined.

However, each pattern of noncompliance with a critical regulation relative to Part 395, Hours of Service of Drivers, will be assessed two points.

VEHICLE FACTOR

When there are a combination of *three or more inspections recorded in the Motor Carrier Management Information System (MCMIS) during the twelve months prior to the CR or performed at the time of the review*, the Vehicle Factor (Parts 393 & 396) will be evaluated on the basis of the Out-of-Service (OOS) rate and noncompliance with acute regulations and/or a pattern of noncompliance with critical regulations. The results of the review of the OOS rate will affect the Vehicle Factor rating as follows:

1. If a motor carrier has three or more roadside vehicle inspections in the twelve months prior to the carrier review, or three vehicles inspected at the time of the review, or a combination of the two totaling three or more, and the vehicle OOS rate is 34% or greater, the initial factor rating will be *conditional*. The requirements of Part 396—Inspection, Repair, and Maintenance—will be examined during each review. The results of the examination could lower the factor rating to *unsatisfactory* if noncompliance with an acute regulation or a pattern of noncompliance with a critical regulation is discovered. If the examination of Part 396 requirements reveals no such problems with the systems the motor carrier is required to maintain for compliance, the Vehicle Factor remains *conditional*.

2. If a carrier's vehicle OOS rate is less than 34%, the initial factor rating will be *satisfactory*. If noncompliance with an acute regulation or a pattern of noncompliance with a critical regulation is discovered during the examination of Part 396 requirements, the factor rating will be lowered to *conditional*. If the examination of Part 396 requirements reveals no such problems with the systems the motor carrier is required to maintain for compliance, the Vehicle Factor remains *satisfactory*.

Nearly two million vehicle inspections occur on the roadside each year. This vehicle inspection information is retained in the MCMIS and is integral to evaluating motor carriers' ability to successfully maintain their vehicles. Since many of the roadside inspections are targeted to visibly defective vehicles and since there are a limited number of inspections for many motor carriers, the use of that data is limited. Each CR will continue to have the requirements of Part 396—Inspection, Repair, and Maintenance reviewed as indicated by the above explanation.

ACCIDENT FACTOR

In addition to the five regulatory rating factors, a sixth factor is included in the process to address the accident history of the motor carrier. This factor is the recordable preventable accident rate which the carrier has experienced during the past 12 months. *Recordable preventable accident* means an accident that (1) Involves a commercial motor vehicle; (2) that meets the definition of an accident in §390.5; and (3) that could have been averted but for an act, or failure to act, by the motor carrier or driver. The sixth factor is assigned a rating based on the carrier's recordable preventable accident rate compared to the national accident rate distribution.

To determine this national distribution, recordable preventable accidents per million miles were computed for each CR performed in a year. Most of these carriers (over 50%) had no recordable accidents. The national average for all carriers reviewed in 1988 was 0.46 per million miles; in 1996, 0.50 per million miles. From these data, the percent of all carriers below or above any proposed accident per million mile breakpoint could be established. The breakpoints shown below were determined from consideration of both the national average and the percentage of carriers below and above alternative breakpoints, i.e.:

The Recordable Preventable Accident Rating Scale (total recordable preventable accidents divided by total mileage times 1 million) is:

Satisfactory=less than .3
Conditional=0.3 to 1.0
Unsatisfactory=greater than 1.0

Exceptions to the Recordable Preventable Accident Rating Scale

Single Accident Exception: The accident factor excludes the accident rates for all motor carriers that have only one recordable preventable accident. One accident occurring in 12 months is too isolated an occurrence to allow it to impact the accident factor.

Urban Carriers Exception: Experience has shown that urban carriers, those motor carriers operating entirely within a radius of less than a 100 air miles (normally in urban areas) have a higher exposure to accident situations because of their environment and

normally have higher accident rates. Therefore, the rating does not become *unsatisfactory* for an urban carrier until it exceeds the 2.0 recordable preventable accident rate per million miles.

Small Carrier Exception: Accident rates for small carriers (fewer than 20 drivers) vary to a great extent from one year to the next. Therefore, the lowest ''accident factor'' rating assigned to a small carrier is *conditional.*

The Factor rating is determined by the following table.

FACTOR #6.—RECORDABLE PREVENTABLE ACCIDENT RATE TABLE

Calculated accident rate	Rating	Rating: urban carriers only
Less than .3	Satisfactory	Satisfactory.
0.3 to 1.0	Conditional	Conditional.
Greater than 1.0 to 2.0.	Unsatisfactory	Conditional.
Greater than 2.0	Unsatisfactory	Unsatisfactory.

Factor Ratings

In the methodology, parts of the FMCSRs and the HMRs having similar characteristics are combined together into five regulatory areas called ''factors.''

The following table shows the five regulatory factors, parts of the FMCSRs and HMRs associated with each factor, and the accident factor.

FACTORS

Factor 1—General=Parts 387 & 390
Factor 2—Driver=Parts 382, 383 & 391
Factor 3—Operational=Parts 392 & 395
Factor 4—Vehicle=Parts 393 & 396
Factor 5—Haz. Mat=Parts 397, 171, 177 & 180
Factor 6—Accident Factor=Recordable Preventable Rate

Factor Ratings are determined as follows:

''Satisfactory''—if the acute and/or critical=0 points
''Conditional''—if the acute and/or critical=1 point
''Unsatisfactory''—if the acute and/or critical=2 or more points

SAFETY RATING

The ratings for the five factors, along with the recordable preventable accident rate for the 12 months prior to the review, are then entered into a rating table which establishes the motor carrier's safety rating.

The FHWA has developed a computerized rating formula for assessing the information obtained from the CR document and is using that formula in assigning a safety rating.

MOTOR CARRIER SAFETY RATING TABLE

Factor ratings		Overall safety rating
Unsatisfactory	Conditional	
0	2 or less	Satisfactory.
0	more than 2	Conditional.
1	2 or less	Conditional.
1	more than 2	Unsatisfactory.
2 or more	0 or more	Unsatisfactory.

ANTICIPATED SAFETY RATING

The *anticipated* (emphasis added) safety rating will appear on the CR.

The following appropriate information will appear after the last entry on the CR, MCS–151, Part B.

''It is anticipated the official safety rating from Washington, D.C. will be SATISFACTORY.''

Or

''It is anticipated the official safety rating from Washington, D.C. will be CONDITIONAL. The safety rating will become effective thirty days from the date of the CR.''

Or

''It is anticipated the official safety rating from Washington, D.C., will be UNSATISFACTORY. The safety rating will become effective thirty days from the date of the CR.''

ASSIGNMENT OF RATING/MOTOR CARRIER NOTIFICATION

When the official rating is determined in Washington, D.C., the FHWA notifies the motor carrier in writing of its safety rating as prescribed in §385.11. An anticipated safety rating which is higher than the existing rating becomes effective as soon as the official safety rating from Washington, D.C. is issued. Notification of a *conditional* or *unsatisfactory* rating includes a list of those Parts of the regulations, or recordable preventable accident rate, for which corrective actions must be taken by the motor carrier to improve its overall safety performance.

Motor Carrier Procedural Rights

Under §§385.15 and 385.17, motor carriers have the right to petition for a review of their ratings *if there are factual or procedural disputes,* and to request another review after corrective actions

have been taken. They are the procedural avenues a motor carrier, which believes its safety rating to be in error, may use, and the means to request another review after corrective action has been taken.

Conclusion

The FHWA believes this ''safety rating methodology'' is a reasonable approach for assigning a safety rating which best describes the current safety fitness posture of a motor carrier as required by the safety fitness regulations (§ 385.9).

Improved compliance with the regulations leads to an improved rating, which in turn increases safety. This increased safety is our regulatory goal.

List of Acute and Critical Regulations

§ 382.115(c) Failing to implement an alcohol and/or controlled substance testing program. (acute)

§ 382.201 Using a driver who has an alcohol concentration of 0.04 or greater. (acute)

§ 382.211 Using a driver who has refused to submit to an alcohol controlled substances test required under Part 382. (acute)

§ 382.213(b) Using a driver who has used a controlled substance. (acute)

§ 382.215 Using a driver who has tested positive for a controlled substance. (acute)

§ 382.301(a) Failing to require driver to undergo pre-employment controlled substance testing. (critical)

§ 382.303(a) Failing to conduct post accident testing on driver for alcohol and/or controlled substances. (critical)

§ 382.305(a) Failing to implement a random controlled substances and/or an alcohol testing program. (acute)

§ 382.305(b)(1) Failing to conduct random alcohol testing at an annual rate of not less than 25 percent of the average number of driver positions. (critical)

§ 382.305(b)(2) Failing to conduct random controlled substances testing at an annual rate of not less than 50 percent of the average number of driver positions. (critical)

§ 382.309(a) Using a driver who has not undergone a return-to-duty alcohol test with a result indicating an alcohol concentration of less than 0.02. (acute)

§ 382.309(b) Using a driver who has not undergone a return-to-duty controlled substances test with a result indicating a verified negative result for controlled substances. (acute)

§ 382.503 Driver performing safety sensitive function, after engaging in conduct prohibited by Subpart B, without being evaluated by substance abuse professional, as required by § 382.605. (critical)

§ 382.505(a) Using a driver within 24 hours after being found to have an alcohol concentration of 0.02 or greater but less than 0.04. (acute)

§ 382.605(c)(1) Using a driver who has not undergone a return-to-duty alcohol test with a result indicating an alcohol concentration of less than .02 or with verified negative test result, after engaging in conduct prohibited by Part 382, Subpart B. (acute)

§ 382.605(c)(2)(ii) Failing to subject a driver who has been identified as needing assistance to at least six unannounced follow-up alcohol and controlled substance tests in the first 12 months following the driver's return to duty. (critical)

§ 383.23(a) Operating a commercial motor vehicle without a valid commercial driver's license. (critical)

§ 383.37(a) Allowing, requiring, permitting, or authorizing an employee with a Commercial Driver's License which is suspended, revoked, or canceled by a state or who is disqualified to operate a commercial motor vehicle. (acute)

§ 383.37(b) Allowing, requiring, permitting, or authorizing an employee with more than one Commercial Driver's License to operate a commercial motor vehicle. (acute)

§ 383.51(a) Allowing, requiring, permitting, or authorizing a driver to drive who is disqualified to drive a commercial motor vehicle. (acute)

§ 387.7(a) Operating a motor vehicle without having in effect the required minimum levels of financial responsibility coverage. (acute)

§ 387.7(d) Failing to maintain at principal place of business required proof of financial responsibility. (critical)

§ 387.31(a) Operating a passenger carrying vehicle without having in effect the required minimum levels of financial responsibility. (acute)

§ 387.31(d) Failing to maintain at principal place of business required proof of financial responsibility for passenger vehicles. (critical)

§ 390.15(b)(2) Failing to maintain copies of all accident reports required by State or other governmental entities or insurers. (critical)

§ 390.35 Making, or causing to make fraudulent or intentionally false statements or records and/or reproducing fraudulent records. (acute)

§ 391.11(a)/391.95 Using an unqualified driver, a driver who has tested positive for controlled substances, or refused to be tested as required. (acute)

§ 391.11(b)(6) Using a physically unqualified driver. (acute)

§391.15(a) Using a disqualified driver. (acute)
§391.45(a) Using a driver not medically examined and certified. (critical)
§391.45(b) Using a driver not medically examined and certified each 24 months. (critical)
§391.51(a) Failing to maintain driver qualification file on each driver employed. (critical)
§391.51(b)(1) Failing to maintain medical examiner's certificate in driver's qualification file. (critical)
§391.51(c)(1) Failing to maintain medical examiner's certificate in driver's qualification file. (critical)
§391.51(c)(3) Failing to maintain inquiries into driver's driving record in driver's qualification file. (critical)
§391.51(d)(1) Failing to maintain medical examiner's certificate in driver's qualification file. (critical)
§391.87(f)(5) Failing to retain in the driver's qualification file test finding, either ''Negative'' and, if ''Positive'', the controlled substances identified. (critical)
§391.93(a) Failing to implement a controlled substances testing program. (acute)
§391.99(a) Failing to require a driver to be tested for the use of controlled substances, upon reasonable cause. (acute)
§391.103(a) Failing to require a driver-applicant whom the motor carrier intends to hire or use to be tested for the use of controlled substances as a pre-qualification condition. (critical)
§391.109(a) Failing to conduct controlled substance testing at a 50% annualized rate. (critical)
§391.115(c) Failing to ensure post-accident controlled substances testing is conducted and conforms with 49 CFR Part 40. (critical)
§392.2 Operating a motor vehicle not in accordance with the laws, ordinances, and regulations of the jurisdiction in which it is being operated. (critical)
§392.4(b) Requiring or permitting a driver to drive while under the influence of, or in possession of, a narcotic drug, amphetamine, or any other substance capable of rendering the driver incapable of safely operating a motor vehicle. (acute)
§392.5(b)(1) Requiring or permitting a driver to drive a motor vehicle while under the influence of, or in possession of, an intoxicating beverage. (acute)
§392.5(b)(2) Requiring or permitting a driver who has consumed an intoxicating beverage within 4 hours to operate a motor vehicle. (acute)
§392.6 Scheduling a run which would necessitate the vehicle being operated at speeds in excess of those prescribed. (critical)
§392.9(a)(1) Requiring or permitting a driver to drive without the vehicle's cargo being properly distributed and adequately secured. (critical)
§395.1(i)(1)(i) Requiring or permitting a driver to drive more than 15 hours. (Driving in Alaska.) (critical)
§395.1(i)(1)(ii) Requiring or permitting a driver to drive after having been on duty 20 hours. (Driving in Alaska.) (critical)
§395.1(i)(1)(iii) Requiring or permitting driver to drive after having been on duty more than 70 hours in 7 consecutive days. (Driving in Alaska.) (critical)
§395.1(i)(1)(iv) Requiring or permitting driver to drive after having been on duty more than 80 hours in 8 consecutive days. (Driving in Alaska.) (critical)
§395.3(a)(1) Requiring or permitting driver to drive more than 10 hours. (critical)
§395.3(a)(2) Requiring or permitting driver to drive after having been on duty 15 hours. (critical)
§395.3(b) Requiring or permitting driver to drive after having been on duty more than 60 hours in 7 consecutive days. (critical)
§395.3(b) Requiring or permitting driver to drive after having been on duty more than 70 hours in 8 consecutive days. (critical)
§395.8(a) Failing to require driver to make a record of duty status. (critical)
§395.8(e) False reports of records of duty status. (critical)
§395.8(l) Failing to require driver to forward within 13 days of completion, the original of the record of duty status. (critical)
§395.8(k)(1) Failing to preserve driver's record of duty status for 6 months. (critical)
§395.8(k)(1) Failing to preserve driver's records of duty status supporting documents for 6 months. (critical)
§396.3(b) Failing to keep minimum records of inspection and vehicle maintenance. (critical)
§396.9(c)(2) Requiring or permitting the operation of a motor vehicle declared ''out-of-service'' before repairs were made. (acute)
§396.11(a) Failing to require driver to prepare driver vehicle inspection report. (critical)
§396.11(c) Failing to correct Out-of-Service defects listed by driver in a driver vehicle inspection report. (acute)
§396.17(a) Using a commercial motor vehicle not periodically inspected. (critical)
§396.17(g) Failing to promptly repair parts and accessories not meeting minimum periodic inspection standards. (acute)
§397.5(a) Failing to ensure a motor vehicle containing Class A or B explosives (Class 1.1, 1.2, or 1.3) is attended at all times by its driver or a qualified representative. (acute)
§397.7(a)(1) Parking a motor vehicle containing Class A or B explosives (1.1, 1.2,

1.3) within 5 feet of traveled portion of highway. (critical)

§ 397.7(b) Parking a motor vehicle containing hazardous material(s) within 5 feet of traveled portion of highway or street. (critical)

§ 397.13(a) Permitting a person to smoke or carry a lighted cigarette, cigar or pipe within 25 feet of a motor vehicle containing explosives, oxidizing materials, or flammable materials. (critical)

§ 397.19(a) Failing to furnish driver of motor vehicle transporting Class A or B explosives (Class 1.1, 1.2, 1.3) with a copy of the rules of Part 397 and/or emergency response instructions. (critical)

§ 397.67(d) Requiring or permitting the operation of a motor vehicle containing Division 1.1, 1.2, or 1.3 (explosive) material that is not accompanied by a written route plan. (critical)

§ 171.15 Carrier failing to give immediate telephone notice of an incident involving hazardous materials. (critical)

§ 171.16 Carrier failing to make a written report of an incident involving hazardous materials. (critical)

§ 177.800(a) Failing to instruct a category of employees in hazardous materials regulations. (critical)

§ 177.817(a)) Transporting a shipment of hazardous materials not accompanied by a properly prepared shipping paper. (critical)

§ 177.817(e) Failing to maintain proper accessibility of shipping papers. (critical)

§ 177.823(a) Moving a transport vehicle containing hazardous material that is not properly marked or placarded. (critical)

§ 177.841(e) Transporting a package bearing a poison label in the same transport vehicle with material marked or known to be foodstuff, feed, or any edible material intended for consumption by humans or animals. (acute)

§ 180.407(a) Transporting a shipment of hazardous material in cargo tank that has not been inspected or retested in accordance with § 180.407. (critical)

§ 180.407(c) Failing to periodically test and inspect a cargo tank. (critical)

§ 180.415 Failing to mark a cargo tank which passed an inspection or test required by § 180.407. (critical)

§ 180.417(a)(1) Failing to retain cargo tank manufacturer's data report certificate and related papers, as required. (critical)

§ 180.417(a)(2) Failing to retain copies of cargo tank manufacturer's certificate and related papers (or alternative report) as required. (critical)

[62 FR 28809, May 28, 1997]

EFFECTIVE DATE NOTE: At 62 FR 28809, May 28, 1997, in part 385, the existing appendix was designated as appendix A, and a new appendix B was added, effective May 28, 1997 until Nov. 28, 1997.

PART 386—RULES OF PRACTICE FOR MOTOR CARRIER SAFETY AND HAZARDOUS MATERIALS PROCEEDINGS

Subpart A—Scope of Rules; Definitions

Sec.
386.1 Scope of rules in this part.
386.2 Definitions.

Subpart B—Commencement of Proceedings, Pleadings

386.11 Commencement of proceedings.
386.12 Complaint.
386.13 Petitions to review and request for hearing: Driver qualification proceedings.
386.14 Replies and request for hearing: Civil forfeiture proceedings.
386.15 [Reserved]
386.16 Action on petitions or replies.
386.17 Intervention.

Subpart C—Compliance and Consent Orders

386.21 Compliance order.
386.22 Consent order.
386.23 Content of consent order.

Subpart D—General Rules and Hearings

386.31 Service.
386.32 Computation of time.
386.33 Extension of time.
386.34 Official notice.
386.35 Motions.
386.36 Motions to dismiss and motions for a more definite statement.
386.37 Discovery methods.
386.38 Scope of discovery.
386.39 Protective orders.
386.40 Supplementation of responses.
386.41 Stipulations regarding discovery.
386.42 Written interrogatories to parties.
386.43 Production of documents and other evidence; entry upon land for inspection and other purposes; and physical and mental examination.
386.44 Request for admissions.
386.45 Motion to compel discovery.
386.46 Depositions.
386.47 Use of deposition at hearings.
386.48 Medical records and physicians' reports.
386.49 Form of written evidence.
386.50 Appearances and rights of witnesses.
386.51 Amendment and withdrawal of pleadings.
386.52 Appeals from interlocutory rulings.
386.53 Subpoenas, witness fees.

386.54 Administrative law judge.
386.55 Prehearing conferences.
386.56 Hearings.
386.57 Proposed findings of fact, conclusions of law.
386.58 Burden of proof.

Subpart E—Decision

386.61 Decision.
386.62 Review of administrative law judge's decision.
386.63 Decision on review.
386.64 Reconsideration.
386.65 Failure to comply with final order.
386.66 Motions for rehearing or for modification.
386.67 Appeal.

Subpart F—Injunctions and Imminent Hazards

386.71 Injunctions.
386.72 Imminent hazard.

Subpart G—Penalties

386.81 General.
386.82 Civil penalties for violations of notices and orders.

APPENDIX A TO PART 386—PENALTY SCHEDULE; VIOLATIONS OF NOTICES AND ORDERS

AUTHORITY: Title XII of Public Law 99–570, 100 Stat. 3207–170 (49 U.S.C. App. 2701 *et seq.*); Title II of Public Law 98–554, 98 Stat. 2829 (49 U.S.C. App. 2501 *et seq.*); Public Law 97–449; 96 Stat. 2413 (49 U.S.C. 104(c)(2), 501 *et seq.*, 3101 *et seq.*); Public Law 93–633, 88 Stat. 2156 (49 U.S.C. App. 1801 *et seq.*); Public Law 97–261, 96 Stat. 1121 (49 U.S.C. 10927, note); Public Law 96–296, 94 Stat. 820 (49 U.S.C. 10927, note); 49 CFR 1.45, 1.48.

SOURCE: 50 FR 40306, Oct. 2, 1985, unless otherwise noted.

Subpart A—Scope of Rules; Definitions

§ 386.1 Scope of rules in this part.

The rules in this part govern procedures in proceedings before the Associate Administrator authorized by the Commercial Motor Vehicle Safety Act of 1986, title XII of Public Law 99–570, 100 Stat. 3207–170 (49 U.S.C. 2701 *et. seq.*); the Motor Carrier Safety Act of 1984, Public Law 98–554, 98 Stat. 2829 (49 U.S.C. 2501 *et. seq*); the recodification of title 49, United States Code, Transportation, Public Law 97–449, 96 Stat. 2413 (49 U.S.C. 104(c)(2), 501 *set seq.*, 3101 *et seq.*); the Hazardous Materials Transportation Act, Public Law 93–633, 88 STat. 2156 (49 U.S.C. 1801 *et seq.*); the Bus Regulatory Reform Act of 1982, Public Law 97–261, 96 Stat. 1121 (49 U.S.C. 10927, note) and the Motor Carrier Act of 1980, Public Law 96–296, 94 Stat. 820, as amended by Public Law 97–424, 96 Stat. 2158 (49 U.S.C. 10927, note). The purpose of the proceedings is to enable the Associate Administrator to determine whether any motor carrier, its agent, employee or other person subject to the jurisdiction of the FHWA under any of the above-mentioned Acts has failed to comply with any provision or requirement of those statutes or regulations issued under them and, if such a violation is found, to issue an appropriate order to compel compliance with the statute or regulation, assess a civil penalty, or both.

[50 FR 40306, Oct. 2, 1985, as amended at 53 FR 2036, Jan. 26, 1988]

§ 386.2 Definitions.

Abate or abatement means to discontinue regulatory violations by refraining from or taking actions identified in a notice to correct noncompliance.

Administration means the Federal Highway Administration.

Administrative law judge means an administrative law judge appointed pursuant to the provisions of 5 U.S.C. 3105.

Associate Administrator means the Associate Administrator for Motor Carriers of the Federal Highway Administration or his/her authorized delegate.

Civil forfeiture proceedings means proceedings to collect civil penalties for violations under the Commercial Motor Vehicle Safety Act of 1986, title XII of Public Law 99–570, 100 Stat. 3207–170 (49 U.S.C. 2701 *et seq.*); the Hazardous Materials Transportation Act, 49 U.S.C. 1809; 49 U.S.C. 3102; the Motor Carrier Safety Act of 1984, 49 U.S.C. 2501 *et seq.*; section 30 of the Motor Carrier Act of 1980, 49 U.S.C. 10927, note; or section 18 of the Bus Regulatory Reform Act of 1982, 49 U.S.C. 10927, note.

Claimant means the representative of the Federal Highway Administration authorized to make claims.

Compliance Order means a written direction to a respondent under this part requiring the performance of certain acts which, based upon the findings in

the proceeding, are considered necessary to bring respondent into compliance with the regulations found to have been violated.

Consent Order means a compliance order which has been agreed to by respondent in the settlement of a civil forfeiture proceeding.

Driver qualification proceeding means a proceeding commenced under 49 CFR 391.47 or by issuance of a letter of disqualification.

Motor carrier means a motor carrier, motor contract carrier, motor private carrier, or motor carrier of migrant workers as defined in 49 U.S.C. 3101 and 10102.

Petitioner means a party petitioning to overturn a determination in a driver qualification proceeding.

Respondent means a party against whom relief is sought or claim is made.

[50 FR 40306, Oct. 2, 1985, as amended at 53 FR 2036, Jan. 26, 1988; 56 FR 10182, Mar. 11, 1991]

Subpart B—Commencement of Proceedings, Pleadings

§386.11 Commencement of proceedings.

(a) *Driver qualification proceedings.* These proceedings are commenced by the issuance of a determination by the Director, Office of Motor Carrier Standards, in a case arising under §391.47 of this chapter or by the issuance of a letter of disqualification.

(1) Such determination and letters must be accompanied by the following:

(i) A citation of the regulation under which the action is being taken;

(ii) A copy of all documentary evidence relied on or considered in taking such action, or in the case of voluminous evidence a summary of such evidence;

(iii) Notice to the driver and motor carrier involved in the case that they may petition for review of the action;

(iv) Notice that a hearing will be granted if the Associate Administrator determines there are material factual issues in dispute;

(v) Notice that failure to petition for review will constitute a waiver of the right to contest the action; and

(vi) Notice that the burden or proof will be on the petitioner in cases arising under §391.47 of this chapter.

(2) At any time before the close of hearing, upon application of a party, the letter or determination may be amended at the discretion of the administrative law judge upon such terms as he/she approves.

(b) *Civil forfeitures.* These proceedings are commenced by the issuance of a Claim Letter or a Notice of Investigation.

(1) Each claim letter must contain the following:

(i) A statement of the provisions of law alleged to have been violated;

(ii) A brief statement of the facts constituting each violation;

(iii) Notice of the amount being claimed, and notice of the maximum amount authorized to be claimed under the statute;

(iv) The form in which and the place where the respondent may pay the claim; and

(v) Notice that the respondent may, within 15 days of service, notify the claimant that the respondent intends to contest the notice, and that if the notice is contested the respondent will be afforded an opportunity for a hearing.

(2) In addition to the information required by paragraph (b)(1) of this section, the letter may contain such other matters as the FHWA deems appropriate, including a notice to abate.

(3) In proceedings for collection of civil penalties for violations of the motor carrier safety regulations under the Motor Carrier Safety Act of 1984, the claimant may require the respondent to post a copy of the claim letter in such place or places and for such duration as the claimant may determine appropriate to aid in the enforcement of the law and regulations.

(c) *Notice of investigation.* This is a notice to respondent that FHWA has discovered violations of the Federal Motor Carrier Safety regulations or Hazardous Materials Regulations under circumstances which may require a compliance order and/or monetary penalty. The proposed form of the compliance order will be included in the notice. The Associate Administrator may issue a Notice of Investigation in his or her own discretion or upon a complaint filed pursuant to §386.12.

(1) Each notice of investigation must include the following:

(i) A statement of the legal authority and jurisdiction for the institution of the proceedings;

(ii) The name and address of each motor carrier against whom relief is sought;

(iii) One or more clear, concise, and separately numbered paragraphs stating the facts alleged to constitute a violation of the law;

(iv) The relief demanded which, where practical, should be in the form of an order for the Associate Administrator's signature, and which shall fix a reasonable time for abatement of the violations and may specify actions to be taken in order to abate the violations;

(v) A statement that the rules in this part require a reply to be filed within 30 days of service of the notice of investigation, and

(vi) A certificate that the notice of investigation was served in accordance with § 386.31.

(2) At any time before the close of hearing or upon application of a party, the notice of investigation may be amended at the discretion of the administrative law judge upon such terms as he/she deems appropriate.

(3) A Claim Letter may be combined with a Notice of Investigation in a single proceeding. In such proceeding, the 30-day reply period in paragraph (c)(1) of this section shall apply.

(4) A notice to abate contained in a Claim Letter or Notice of Investigation shall specify what must be done by the respondent, a reasonable time within which abatement must be achieved, and that failure to abate subjects the respondent to additional penalties as prescribed in subpart G of this part.

[50 FR 40306, Oct. 2, 1985, as amended at 53 FR 2036, Jan. 26, 1988; 56 FR 10182, Mar. 11, 1991]

§ 386.12 Complaint.

(a) *Filing of a complaint.* Except as otherwise provided in paragraph (c) of this section, any person, State board, organization, or body politic may file a written complaint with the Associate Administrator, requesting the issuance of a notice of investigation under § 386.11(c). Each complaint must contain:

(1) The name and address of the party who files it, and a statement specifying the authority for a party (other than a natural person) to file the complaint;

(2) A statement of the interest of the party in the proceedings;

(3) The name and address of each motor carrier against who relief is sought;

(4) The reasons why the party believes that a notice of investigation should be issued;

(5) A statement of any prior action which the party has taken to redress the violations of law alleged in the complaint and the results of that action; and

(6) The relief which the party believes the Administration should seek.

(b) *Action on paragraph (a) complaint.* Upon the filing of a complaint under paragraph (a) of this section, the Associate Administrator shall determine whether it states reasonable grounds for investigation and action by the Administration. If he/she determines that the complaint states such grounds, the Associate Administrator shall issue, or authorize the issuance of, a notice of investigation under § 386.11(c). If he/she determines that the complaint does not state reasonable grounds for investigation and action by the Administration, the Associate Administrator shall dismiss it.

(c) *Complaint of substantial violation.* Any person may file a written complaint with the Associate Administrator alleging that a substantial violation of any regulation issued under the Motor Carrier Safety Act of 1984 is occurring or has occurred within the preceding 60 days. A substantial violation is one which could reasonably lead to, or has resulted in, serious personal injury or death. Each complaint must be signed by the complainant and must contain:

(1) The name, address, and telephone number of the person who files it;

(2) The name and address of the alleged violator and, with respect to each alleged violator, the specific provisions of the regulations that the complainant believes were violated; and

(3) A concise but complete statement of the facts relied upon to substantiate each allegation, including the date of each alleged violation.

(d) *Action on complaint of substantial violation*. Upon the filing of a complaint of a substantial violation under paragraph (c) of this section, the Associate Administrator shall determine whether it is nonfrivolous and meets the requirements of paragraph (c) of this section. If the Associate Administrator determines that the complaint is nonfrivolous and meets the requirements of paragraph (c), he/she shall investigate the complaint. The complainant shall be timely notified of findings resulting from such investigation. The Associate Administrator shall not be required to conduct separate investigations of duplicative complaints. If the Associate Administrator determines that the complaint is frivalous or does not meet the requirements of paragraph (c), he/she shall dismiss the complaint and notify the complainant in writing of the reasons for such dismissal.

(e) Notwithstanding the provisions of section 552 of title 5, United States Code, the Associate Administrator shall not disclose the identity of complainants unless it is determined that such disclosure is necessary to prosecute a violation. If disclosure becomes necessary, the Associate Administrator shall take every practical means within the Associate Administrator's authority to assure that the complainant is not subject to harassment, intimidation, disciplinary action, discrimination, or financial loss as a result of such disclosure.

§386.13 Petitions to review and request for hearing: Driver qualification proceedings.

(a) Within 60 days after service of the determination under §391.47 of this chapter or the letter of disqualification, the driver or carrier may petition to review such action. Such petitions must be submitted to the Associate Administrator and must contain the following:

(1) Identification of what action the petitioner wants overturned;

(2) Copies of all evidence upon which petitioner relies in the form set out in §386.49;

(3) All legal and other arguments which the petitioner wishes to make in support of his/her position;

(4) A request for oral hearing, if one is desired, which must set forth material factual issues believed to be in dispute;

(5) Certification that the reply has been filed in accordance with §386.31; and

(6) Any other pertinent material.

(b) Failure to submit a petition as specified in paragraph (a) of this section shall constitute a waiver of the right to petition for review of the determination or letter of disqualification. In these cases, the determination or disqualification issued automatically becomes the final decision of the Associate Administrator 30 days after the time to submit the reply or petition to review has expired, unless the Associate Administrator orders otherwise.

(c) If the petition does not request a hearing, the Associate Administrator may issue a final decision and order based on the evidence and arguments submitted.

§386.14 Replies and request for hearing: Civil forfeiture proceedings.

(a) *Time for reply*. The respondent must reply within 15 days after a Claim Letter is served, or 30 days after a Notice of Investigation is received.

(b) *Contents of reply*. The reply must contain the following:

(1) An admission or denial of each allegation of the claim or notice and a concise statement of facts constituting each defense;

(2) If the respondent contests the claim or notice, a request for an oral hearing or notice of intent to submit evidence without an oral hearing must be contained in the reply. A request for a hearing must list all material facts believed to be in dispute. Failure to request a hearing within 15 days after the Claim Letter is served, or 30 days in the case of a Notice of Investigation, shall constitute a waiver of any right to a hearing;

(3) A statement of whether the respondent wishes to negotiate the terms of payment or settlement of the amount claimed, or the terms and conditions of the order; and

(4) Certification that the reply has been served in accordance with §386.31.

(c) *Submission of evidence.* If a notice of intent to submit evidence without oral hearing is filed, or if no hearing is requested under paragraph (b)(2) of this section, and the respondent contests the claim or the contents of the notice, all evidence must be served in written form no later than the 40th day following service of the Claim Letter or Notice of Investigation. Evidence must be served in the form specified in § 386.49.

(d) *Complainant's request for a hearing.* If the respondent files a notice of intent to submit evidence without formal hearing, the complainant may, within 15 days after that reply is filed, submit a request for a formal hearing. The request must include a listing of all factual issues believed to be in dispute.

(e) *Failure to reply or request a hearing.* If the respondent does not reply to a Claim Letter within the time prescribed in this section, the Claim Letter becomes the final agency order in the proceeding 25 days after it is served. When no reply to the Notice of Investigation is received, the Associate Administrator may, on motion of any party, issue a final order in the proceeding.

(f) *Non-compliance with final order.* Failure to pay the civil penalty as directed in a final order constitutes a violation of that order subjecting the respondent to an additional penalty as prescribed in subpart G of this part.

[50 FR 40306, Oct. 2, 1985, as amended at 56 FR 10183, Mar. 11, 1991]

§ 386.15 [Reserved]

§ 386.16 Action on petitions or replies.

(a) *Replies not requesting an oral hearing.* If the reply submitted does not request an oral hearing, the Associate Administrator may issue a final decision and order based on the evidence and arguments submitted.

(b) *Request for oral hearing.* If a request for an oral hearing has been filed, the Associate Administrator shall determine whether there are any material factual issues in dispute. If there are, he/she shall call the matter for a hearing. If there are none, he/she shall issue an order to that effect and set a time for submission of argument by the parties. Upon the submission of argument he/she shall decide the case.

(c) *Settlement of civil forfeitures.* (1) When negotiations produce an agreement as to the amount or terms of payment of a civil penalty or the terms and conditions of an order, a settlement agreement shall be drawn and signed by the respondent and the Associate Administrator. Such settlement agreement must contain the following:

(i) The statutory basis of the claim;

(ii) A brief statement of the violations;

(iii) The amount claimed and the amount paid;

(iv) The date, time, and place and form of payment;

(v) A statement that the agreement is not binding on the agency until executed by the Associate Administrator; and

(vi) A statement that failure to pay in accordance with the terms of the agreement which has been adopted as a Final Order will result in the loss of any reductions in penalties for claims found to be valid, and the original amount claimed will be due immediately.

(2) Any settlement agreement may contain a consent order.

(3) An executed settlement agreement is binding on the respondent and the claimant according to its terms. The respondent's consent to a settlement agreement that has not been executed by the Associate Administrator may not be withdrawn for a period of 30 days after it is executed by the respondent.

[50 FR 40306, Oct. 2, 1985, as amended at 56 FR 10183, Mar. 11, 1991]

§ 386.17 Intervention.

After the matter is called for hearing and before the date set for the hearing to begin, any person may petition for leave to intervene. The petition is to be served on the administrative law judge. The petition must set forth the reasons why the petitioner alleges he/she is entitled to intervene. The petition must be served on all parties in accordance with § 386.31. Any party may file a response within 10 days of service of the petition. The administrative law judge shall then determine whether to permit or deny the petition. The petition will be allowed if the administrative law

judge determines that the final decision could directly and adversely affect the petitioner or the class he/she represents, and if the petitioner may contribute materially to the disposition of the proceedings and his/her interest is not adequately represented by existing parties. Once admitted, a petitioner is a party for the purpose of all subsequent proceedings.

Subpart C—Compliance and Consent Orders

§386.21 Compliance order.

(a) When a respondent contests a Notice of Investigation or fails to reply to such notice, the final order disposing of the proceeding may contain a compliance order.

(b) A compliance order shall be executed by the Associate Administrator and shall contain the following:

(1) A statement of jurisdictional facts;

(2) Findings of facts, or reference thereto in an accompanying decision, as determined by a hearing officer or by the Associate Administrator upon respondent's failure to reply to the notice, which establish the violations charged;

(3) A specific direction to the respondent to comply with the regulations violated within time limits provided;

(4) Other directions to the respondent to take reasonable measures, in the time and manner specified, to assure future compliance;

(5) A statement of the consequences for failure to meet the terms of the order;

(6) Provision that the Notice of Investigation and the final decision of the hearing officer or Associate Administrator may be used to construe the terms of the order; and

(7) A statement that the order constitutes final agency action, subject to review as provided in 49 U.S.C. 521(b)(8) for violations of regulations issued under the authority of 49 U.S.C. 3102, the Motor Carrier Safety Act of 1984 or 12002, 12003, 12004, 12005(b), or 12008(d)(2) of the Commercial Motor Vehicle Safety Act of 1986; or as provided in 5 U.S.C. 701 *et seq.*, for violations of regulations issued under the authority of 49 U.S.C. App. 1804 (hazardous materials proceedings) or 49 U.S.C. 10947 note (financial responsibility proceedings).

(c) *Notice of imminent hazard.* A compliance order may also contain notice that further violations of the same regulations may constitute an imminent hazard subjecting respondent to an order under subpart F of this part.

[56 FR 10183, Mar. 11, 1991]

§386.22 Consent order.

When a respondent has filed an election not to contest under §386.15(a), or has agreed to settlement of a civil forfeiture, and at any time before the hearing is concluded, the parties may execute an appropriate agreement for disposing of the case by consent for the consideration of the Associate Administrator. The agreement is filed with the Associate Administrator who may (a) accept it, (b) reject it and direct that proceedings in the case continue, or (c) take such other action as he/she deems appropriate. If the Associate Administrator accepts the agreement, he/she shall enter an order in accordance with its terms.

[50 FR 40306, Oct. 2, 1985. Redesignated at 56 FR 10183, Mar. 11, 1991]

§386.23 Content of consent order.

(a) Every agreement filed with the Associate Administrator under §386.22 must contain:

(1) An order for the disposition of the case in a form suitable for the Associate Administrator's signature that has been signed by the respondent;

(2) An admission of all jurisdictional facts;

(3) A waiver of further procedural steps, of the requirement that the decision or order must contain findings of fact and conclusions of law, and of all right to seek judicial review or otherwise challenge or contest the validity of the order;

(4) Provisions that the notice of investigation or settlement agreement may be used to construe the terms of the order;

(5) Provisions that the order has the same force and effect, becomes final, and may be modified, altered, or set aside in the same manner as other orders issued under 49 U.S.C. 501 *et seq.*,

2501 *et seq.*, 3101 *et seq.*, and 10927, note; and

(6) Provisions that the agreement will not be part of the record in the proceeding unless and until the Associate Administrator executes it.

(b) A consent order may also contain any of the provisions enumerated in § 386.21—Compliance Order.

[50 FR 40306, Oct. 2, 1985. Redesignated and amended at 56 FR 10183, Mar. 11, 1991]

Subpart D—General Rules and Hearings

§ 386.31 Service.

(a) All service required by these rules shall be by mail or by personal delivery. Service by mail is complete upon mailing.

(b) A certificate of service shall accompany all pleadings, motions, and documents when they are tendered for filing, and shall consist of a certificate of personal delivery or a certificate of mailing, executed by the person making the personal delivery or mailing the document. The first pleading of the Government in a proceeding initiated under this part shall have attached to it a service list of persons to be served. This list shall be updated as necessary.

(c) Copies of all pleadings, motions, and documents must be served on the docket clerk and upon all parties to the proceedings by the person filing them, in the number of copies indicated on the Government's initial service list.

§ 386.32 Computation of time.

(a) Generally, in computing any time period set out in these rules or in an order issued hereunder, the time computation begins with the day following the act, event, or default. The last day of the period is included unless it is a Saturday, Sunday, or legal Federal holiday in which case the time period shall run to the end of the next day that is not a Saturday, Sunday, or legal Federal holiday. All Saturdays, Sundays, and legal Federal holidays except those falling on the last day of the period shall be computed.

(b) *Date of entry of orders.* In computing any period of time involving the date of the entry of an order, the date of entry shall be the date the order is served.

(c) *Computation of time for delivery by mail.* (1) Documents are not deemed filed until received by the docket clerk. However, when documents are filed by mail, 5 days shall be added to the prescribed period.

(2) Service of all documents is deemed effected at the time of mailing.

(3) Whenever a party has the right or is required to take some action within a prescribed period after the service of a pleading, notice, or other document upon said party, and the pleading, notice, or document is served upon said party by mail, 5 days shall be added to the prescribed period.

§ 386.33 Extension of time.

All requests for extensions of time shall be filed with the Associate Administrator or, if the matter has been called for a hearing, with the administrative law judge. All requests must state the reasons for the request. Only those requests showing good cause will be granted. No motion for continuance or postponement of a hearing date filed within 7 days of the date set for a hearing will be granted unless it is accompanied by an affidavit showing that extraordinary circumstances warrant a continuance.

§ 386.34 Official notice.

The Associate Administrator or administrative law judge may take official notice of any fact not appearing in evidence if he/she notifies all parties he/she intends to do so. Any party objecting to the official notice shall file an objection within 10 days after service of the notice.

§ 386.35 Motions.

(a) *General.* An application for an order or ruling not otherwise covered by these rules shall be by motion. All motions filed prior to the calling of the matter for a hearing shall be to the Associate Administrator. All motions filed after the matter is called for hearing shall be to the administrative law judge.

(b) *Form.* Unless made during hearing, motions shall be made in writing, shall state with particularity the grounds for relief sought, and shall be

accompanied by affidavits or other evidence relied upon.

(c) *Answers.* Except when a motion is filed during a hearing, any party may file an answer in support or opposition to a motion, accompanied by affidavits or other evidence relied upon. Such answers shall be served within 7 days after the motion is served or within such other time as the Associate Administrator or administrative law judge may set.

(d) *Argument.* Oral argument or briefs on a motion may be ordered by the Associate Administrator or the administrative law judge.

(e) *Disposition.* Motions may be ruled on immediately or at any other time specified by the administrative law judge or the Associate Administrator.

(f) *Suspension of time.* The pendency of a motion shall not affect any time limits set in these rules unless expressly ordered by the Associate Administrator or administrative law judge.

§ 386.36 Motions to dismiss and motions for a more definite statement.

(a) Motions to dismiss must be made within the time set for reply or petition to review, except motions to dismiss for lack of jurisdiction, which may be made at any time.

(b) Motions for a more definite statement may be made in lieu of a reply. The motion must point out the defects complained of and the details desired. If the motion is granted, the pleading complained of must be remedied within 15 days of the granting of the motion or it will be stricken. If the motion is denied, the party who requested the more definite statement must file his/her pleading within 10 days after the denial.

§ 386.37 Discovery methods.

Parties may obtain discovery by one or more of the following methods: Depositions upon oral examination or written questions; written interrogatories; production of documents or other evidence for inspection and other purposes; physical and mental examinations; and requests for admission. Unless the Associate Administrator or, in cases that have been called for a hearing, the administrative law judge orders otherwise, the fequency or sequence of these methods is not limited.

§ 386.38 Scope of discovery.

(a) Unless otherwise limited by order of the Associate Administrator or, in cases that have been called for a hearing, the administrative law judge, in accordance with these rules, the parties may obtain discovery regarding any matter, not privileged, which is relevant to the subject matter involved in the proceeding, including the existence, description, nature, custody, condition, and location of any books, documents, or other tangible things and the identity and location of persons having knowledge of any discoverable matter.

(b) It is not ground for objection that information sought will not be admissible at the hearing if the information sought appears reasonably calculated to lead to the discovery of admissible evidence.

(c) A party may obtain discovery of documents and tangible things otherwise discoverable under paragraph (a) of this section and prepared in anticipation of or for the hearing by or for another party's representative (including his or her attorney, consultant, surety, indemnitor, insurer, or agent) only upon a showing that the party seeking discovery has substantial need of the materials in the preparation of his or her case and that he or she is unable without undue hardship to obtain the substantial equivalent of the materials by other means. In ordering discovery of such materials when the required showing has been made, the Associate Administrator or the administrative law judge shall protect against disclosure of the mental impressions, conclusions, opinions, or legal theories of an attorney or other representative of a party concerning the proceeding.

§ 386.39 Protective orders.

Upon motion by a party or other person from whom discovery is sought, and for good cause shown, the Associate Administrator or the administrative law judge, if one has been appointed, may make any order which justice requires to protect a party or person from annoyance, embarrassment, oppression, or undue burden or

expense, including one or more of the following:

(a) The discovery not be had;

(b) The discovery may be had only on specified terms and conditions, including a designation of the time or place;

(c) The discovery may be had only by a method of discovery other than that selected by the party seeking discovery;

(d) Certain matters not relevant may not be inquired into, or that the scope of discovery be limited to certain matters;

(e) Discovery be conducted with no one present except persons designated by the Associate Administrator or the administrative law judge; or

(f) A trade secret or other confidential research, development, or commercial information may not be disclosed or be disclosed only in a designated way.

§ 386.40 Supplementation of responses.

A party who has responded to a request for discovery with a response that was complete when made is under no duty to supplement his/her response to include information thereafter acquired, except as follows:

(a) A party is under a duty to supplement timely his/her response with respect to any question directly addressed to:

(1) The identity and location of persons having knowledge of discoverable matters; and

(2) The identity of each person expected to be called as an expert witness at the hearing, the subject matter on which he or she is expected to testify and the substance of his or her testimony.

(b) A party is under a duty to amend timely a prior response if he or she later obtains information upon the basis of which:

(1) he or she knows the response was incorrect when made; or

(2) he or she knows that the response though correct when made is no longer true and the circumstances are such that a failure to amend the response is in substance a knowing concealment.

(c) A duty to supplement responses may be imposed by order of the Associate Administrator or the administrative law judge or agreement of the parties.

§ 386.41 Stipulations regarding discovery.

Unless otherwise ordered, a written stipulation entered into by all the parties and filed with the Associate Administrator or the administrative law judge, if one has been appointed, may:

(a) Provide that depositions be taken before any person, at any time or place, upon sufficient notice, and in any manner, and when so taken may be used like other depositions, and

(b) Modify the procedures provided by these rules for other methods of discovery.

§ 386.42 Written interrogatories to parties.

(a) Any party may serve upon any other party written interrogatories to be answered in writing by the party served, or if the party served is a public or private corporation or a partnership or association or governmental agency, by any authorized officer or agent, who shall furnish such information as is available to the party. A copy of the interrogatories, answers, and all related pleadings shall be served on the Associate Administrator or, in cases that have been called to a hearing, on the administrative law judge, and upon all parties to the proceeding.

(b) Each interrogatory shall be answered separately and fully in writing under oath or affirmation, unless it is objected to, in which event the reasons for objection shall be stated in lieu of an answer. The answers and objections shall be signed by the person making them. The party upon whom the interrogatories were served shall serve a copy of the answer and objections upon all parties to the proceeding within 30 days after service of the interrogatories, or within such shortened or longer period as the Associate Administrator or the administrative law judge may allow.

(c) An interrogatory otherwise proper is not necessarily objectionable merely because an answer to the interrogatory involves an opinion or contention that relates to fact or the application of law to fact, but the Associate Administrator or administrative law judge may

order that such an interrogatory need not be answered until after designated discovery has been completed or until a prehearing conference or other later time.

§ 386.43 Production of documents and other evidence; entry upon land for inspection and other purposes; and physical and mental examination.

(a) Any party may serve on any other party a request to:

(1) Produce and permit the party making the request, or a person acting on his or her behalf, to inspect and copy any designated documents, or to inspect and copy, test, or sample any tangible things which are in the possession, custody, or control of the party upon whom the request is served; or

(2) Permit entry upon designated land or other property in the possession or control of the party upon whom the request is served for the purpose of inspection and measuring, photographing, testing, or for other purposes as stated in paragraph (a)(1) of this section.

(3) Submit to a physical or mental examination by a physician.

(b) The request may be served on any party without leave of the Associate Administrator or administrative law judge.

(c) The request shall:

(1) Set forth the items to be inspected either by individual item or category;

(2) Describe each item or category with reasonable particularity;

(3) Specify a reasonable time, place, and manner of making the inspection and performing the related acts;

(4) Specify the time, place, manner, conditions, and scope of the physical or mental examination and the person or persons by whom it is to be made. A report of examining physician shall be made in accordance with Rule 35(b) of the Federal Rules of Civil Procedure, title 28, U.S. Code, as amended.

(d) The party upon whom the request is served shall serve on the party submitting the request a written response within 30 days after service of the request.

(e) The response shall state, with respect to each item or category:

(1) That inspection and related activities will be permitted as requested; or

(2) That objection is made in whole or in part, in which case the reasons for objection shall be stated.

(f) A copy of each request for production and each written response shall be served on all parties and filed with the Associate Administrator or the administrative law judge, if one has been appointed.

§ 386.44 Request for admissions.

(a) *Request for admission*. (1) Any party may serve upon any other party a request for admission of any relevant matter or the authenticity of any relevant document. Copies of any document about which an admission is requested must accompany the request.

(2) Each matter for which an admission is requested shall be separately set forth and numbered. The matter is admitted unless within 15 days after service of the request, the party to whom the request is directed serves upon the party requesting the admission a written answer signed by the party or his/her attorney.

(3) Each answer must specify whether the party admits or denies the matter. If the matter cannot be admitted or denied, the party shall set out in detail the reasons.

(4) A party may not issue a denial or fail to answer on the ground that he/she lacks knowledge unless he/she has made reasonable inquiry to ascertain information sufficient to allow him/her to admit or deny.

(5) A party may file an objection to a request for admission within 10 days after service. Such motion shall be filed with the administrative law judge if one has been appointed, otherwise it shall be filed with the Associate Administrator. An objection must explain in detail the reasons the party should not answer. A reply to the objection may be served by the party requesting the admission within 10 days after service of the objection. It is not sufficient ground for objection to claim that the matter about which an admission is requested presents an issue of fact for hearing.

(b) *Effect of admission.* Any matter admitted is conclusively established unless the Associate Administrator or administrative law judge permits withdrawal or amendment. Any admission under this rule is for the purpose of the pending action only and may not be used in any other proceeding.

(c) If a party refuses to admit a matter or the authenticity of a document which is later proved, the party requesting the admission may move for an award of expenses incurred in making the proof. Such a motion shall be granted unless there was a good reason for failure to admit.

§ 386.45 Motion to compel discovery.

(a) If a deponent fails to answer a question propounded or a party upon whom a request is made pursuant to §§ 386.42 through 386.44, or a party upon whom interrogatories are served fails to respond adequately or objects to the request, or any part thereof, or fails to permit inspection as requested, the discovering party may move the Associate Administrator or the administrative law judge, if one has been appointed, for an order compelling a response or inspection in accordance with the request.

(b) The motion shall set forth:

(1) The nature of the questions or request;

(2) The response or objections of the party upon whom the request was served; and

(3) Arguments in support of the motion.

(c) For purposes of this section, an evasive answer or incomplete answer or response shall be treated as a failure to answer or respond.

(d) In ruling on a motion made pursuant to this section, the Associate Administrator or the administrative law judge, if one has been appointed, may make and enter a protective order such as he or she is authorized to enter on a motion made pursuant to § 386.39(a).

§ 386.46 Depositions.

(a) *When, how, and by whom taken.* The deposition of any witness may be taken at any stage of the proceeding at reasonable times. Depositions may be taken by oral examination or upon written interrogatories before any person having power to administer oaths.

(b) *Application.* Any party desiring to take the deposition of a witness shall indicate to the witness and all other parties the time when, the place where, and the name and post office address of the person before whom the deposition is to be taken; the name and address of each witness; and the subject matter concerning which each such witness is expected to testify.

(c) *Notice.* Notice shall be given for the taking of a deposition, which shall be not less than 5 days written notice when the deposition is to be taken within the continental United States and not less than 20 days written notice when the deposition is to be taken elsewhere.

(d) *Taking and receiving in evidence.* Each witness testifying upon deposition shall be sworn, and any other party shall have the right to cross-examine. The questions propounded and the answers thereto, together with all objections made, shall be reduced to writing; read by or to, and subscribed by the witness; and certified by the person administering the oath. Thereafter, such officer shall seal the deposition in an envelope and mail the same by certified mail to the Associate Administrator or the administrative law judge, if one has been appointed. Subject to such objections to the questions and answers as were noted at the time of taking the deposition and which would have been valid if the witness were personally present and testifying, such deposition may be read and offered in evidence by the party taking it as against any party who was present or represented at the taking of the deposition or who had due notice thereof.

(e) *Motion to terminate or limit examination.* During the taking of a deposition, a party or deponent may request suspension of the deposition on grounds of bad faith in the conduct of the examination, oppression of a deponent or party or improper questions propounded. The deposition will then be adjourned. However, the objecting party or deponent must immediately move the Associate Administrator or administrative law judge for a ruling

on his or her objections to the deposition conduct or proceedings. The Associate Administrator or administrative law judge may then limit the scope or manner of the taking of the deposition.

§ 386.47 Use of deposition at hearings.

(a) *Generally*. At the hearing, any part or all of a deposition, so far as admissible under the rules of evidence, may be used against any party who was present or represented at the taking of the deposition or who had due notice thereof in accordance with any one of the following provisions:

(1) Any deposition may be used by any party for the purpose of contradicting or impeaching the testimony of the deponent as a witness.

(2) The deposition of expert witnesses, particularly the deposition of physicians, may be used by any party for any purpose, unless the Associate Administrator or administrative law judge rules that such use would be unfair or a violation of due process.

(3) The deposition of a party or of anyone who at the time of taking the deposition was an officer, director, or duly authorized agent of a public or private organization, partnership, or association which is a party, may be used by any other party for any purpose.

(4) The deposition of a witness, whether or not a party, may be used by any party for any purpose if the presiding officer finds:

(i) That the witness is dead; or

(ii) That the witness is out of the United States or more than 100 miles from the place of hearing unless it appears that the absence of the witness was procured by the party offering the deposition; or

(iii) That the witness is unable to attend to testify because of age, sickness, infirmity, or imprisonment; or

(iv) That the party offering the deposition has been unable to procure the attendance of the witness by subpoena; or

(v) Upon application and notice, that such exceptional circumstances exist as to make it desirable, in the interest of justice and with due regard to the importance of presenting the testimony of witnesses orally in open hearing, to allow the deposition to be used.

(5) If only part of a deposition is offered in evidence by a party, any other party may require him or her to introduce all of it which is relevant to the part introduced, and any party may introduce any other parts.

(b) *Objections to admissibility*. Except as provided in this paragraph, objection may be made at the hearing to receiving in evidence any deposition or part thereof for any reason which would require the exclusion of the evidence if the witness were then present and testifying.

(1) Objections to the competency of a witness or to the competency, relevancy or materiality of testimony are not waived by failure to make them before or during the taking of the deposition, unless the ground of the objection is one which might have been obviated or removed if presented at that time.

(2) Errors and irregularities occurring at the oral examination in the manner of taking the deposition, in the form of the questions or answers, in the oath or affirmation, or in the conduct of parties and errors of any kind which might be obviated, removed, or cured if promptly presented, are waived unless reasonable objection thereto is made at the taking of the deposition.

(3) Objections to the form or written interrogatories are waived unless served in writing upon the party propounding them.

(c) *Effect of taking using depositions.* A party shall not be deemed to make a person his or her own witness for any purpose by taking his or her deposition. The introduction in evidence of the deposition or any part thereof for any purpose other than that of contradicting or impeaching the deponent makes the deponent the witness of the party introducing the deposition, but this shall not apply to the use by any other party of a deposition as described in paragraph (a)(2) of this section. At the hearing, any party may rebut any relevant evidence contained in a deposition whether introduced by him or her or by any other party.

§ 386.48 Medical records and physicians' reports.

In cases involving the physical qualifications of drivers, copies of all physicians' reports, test results, and other

medical records that a party intends to rely upon shall be served on all other parties at least 30 days prior to the date set for a hearing. Except as waived by the Director, Office of Motor Carrier Standards, reports, test results and medical records not served under this rule shall be excluded from evidence at any hearing.

[50 FR 40306, Oct. 2, 1985, as amended at 53 FR 2036, Jan. 26, 1988]

§ 386.49 Form of written evidence.

All written evidence shall be submitted in the following forms:

(a) An affidavit of a person having personal knowledge of the facts alleged, or

(b) Documentary evidence in the form of exhibits attached to an affidavit identifying the exhibit and giving its source.

§ 386.50 Appearances and rights of witnesses.

(a) Any party to a proceeding may appear and be heard in person or by attorney. A regular employee of a party who appears on behalf of the party may be required by the administrative law judge to show his or her authority to so appear.

(b) Any person submits data or evidence in a proceeding governed by this part may, upon timely request and payment of costs, procure a copy of any document submitted by him/her or of any transcript. Original documents, data or evidence may be retained upon permission of the administrative law judge or Associate Administrator upon substitution of copy therefor.

§ 386.51 Amendment and withdrawal of pleadings.

(a) Except in instances covered by other rules, anytime more than 15 days prior to the hearing, a party may amend his/her pleadings by serving the amended pleading on the Associate Administrator or the administrative law judge, if one has been appointed, and on all parties. Within 15 days prior to the hearing, an amendment shall be allowed only at the discretion of the Administrative law judge. When an amended pleading is filed, other parties may file a response and objection within 10 days.

(b) A party may withdraw his/her pleading only on approval of the administrative law judge or Associate Administrator.

§ 386.52 Appeals from interlocutory rulings.

Rulings of the administrative law judge may not be appealed to the Associate Administrator prior to his/her consideration of the entire proceeding except under exceptional circumstances and with the consent of the administrative law judge. In deciding whether to allow appeals, the administrative law judge shall determine whether the appeal is necessary to prevent undue prejudice to a party or to prevent substantial detriment to the public interest.

§ 386.53 Subpoenas, witness fees.

(a) Applications for the issuance of subpoenas must be submitted to the Associate Administrator, or in cases that have been called for a hearing, to the administrative law judge. The application must show the general relevance and reasonable scope of the evidence sought. Any person served with a subpoena may, within 7 days after service, file a motion to quash or modify. The motion must be filed with the official who approved the subpoena. The filing of a motion shall stay the effect of the subpoena until a decision is reached.

(b) Witnesses shall be entitled to the same fees and mileage as are paid witnesses in the courts of the United States. The fees shall be paid by the party at whose instance the witness is subpoenaed or appears.

(c) Paragraph (a) of this section shall not apply to the Administrator or employees of the FHWA or to the production of documents in their custody. Applications for the attendance of such persons or the production of such documents at a hearing shall be made to the Associate Administrator or administrative law judge, if one is appointed, and shall set forth the need for such evidence and its relevancy.

§ 386.54 Administrative law judge.

(a) *Appointment.* After the matter is called for hearing, the Associate Administrator shall appoint an administrative law judge.

(b) *Power and duties.* Except as provided in paragraph (c) of this section, the administrative law judge has power to take any action and to make all needful rules and regulations to govern the conduct of the proceedings to ensure a fair and impartial hearing, and to avoid delay in the disposition of the proceedings. his/her powers include the following:

(1) To administer oaths and affirmations;

(2) To issue orders permitting inspection and examination of lands, buildings, equipment, and any other physical thing and the copying of any document;

(3) To issue subpoenas for the attendance of witnesses and the production of evidence as authorized by law;

(4) To rule on offers of proof and receive evidence;

(5) To regulate the course of the hearing and the conduct of participants in it;

(6) To consider and rule upon all procedural and other motions, including motions to dismiss, except motions which, under this part, are made directly to the Associate Administrator;

(7) To hold conferences for settlement, simplification of issues, or any other proper purpose;

(8) To make and file decisions; and

(9) To take any other action authorized by these rules and permitted by law.

[50 FR 40306, Oct. 2, 1985, as amended at 53 FR 2036, Jan. 26, 1988]

§ 386.55 Prehearing conferences.

(a) *Convening.* At any time before the hearing begins, the administrative law judge, on his/her own motion or on motion by a party, may direct the parties or their counsel to participate with him/her in a prehearing conference to consider the following:

(1) Simplification and clarification of the issues;

(2) Necessity or desirability of amending pleadings;

(3) Stipulations as to the facts and the contents and authenticity of documents;

(4) Issuance of and responses to subpoenas;

(5) Taking of depositions and the use of depositions in the proceedings;

(6) Orders for discovery, inspection and examination of premises, production of documents and other physical objects, and responses to such orders;

(7) Disclosure of the names and addresses of witnesses and the exchange of documents intended to be offered in evidence; and

(8) Any other matter that will tend to simplify the issues or expedite the proceedings.

(b) *Order.* The administrative law judge shall issue an order which recites the matters discussed, the agreements reached, and the rulings made at the prehearing conference. The order shall be served on the parties and filed in the record of the proceedings.

§ 386.56 Hearings.

(a) As soon as practicable after his/her appointment, the administrative law judge shall issue an order setting the date, time, and place for the hearing. The order shall be served on the parties and become a part of the record of the proceedings. The order may be amended for good cause shown.

(b) *Conduct of hearing.* The administrative law judge presides over the hearing. Hearings are open to the public unless the administrative law judge orders otherwise.

(c) *Evidence.* Except as otherwise provided in these rules and the Administrative Procedure Act, 5 U.S.C. 551 *et seq.,* the Federal Rules of Evidence shall be followed.

(d) *Information obtained by investigation.* Any document, physical exhibit, or other material obtained by the Administration in an investigation under its statutory authority may be disclosed by the Administration during the proceeding and may be offered in evidence by counsel for the Administration.

(e) *Record.* The hearing shall be stenographically transcribed and reported. The transcript, exhibits, and other documents filed in the proceedings shall constitute the official record

of the proceedings. A copy of the transcript and exhibits will be made available to any person upon payment of prescribed costs.

§ 386.57 Proposed findings of fact, conclusions of law.

The administrative law judge shall afford the parties reasonable opportunity to submit proposed findings of fact, conclusions of law, and supportng reasons therefor. If the administrative law judge orders written proposals and arguments, each proposed finding must include a citation to the specific portion of the record relied on to support it. Written submissions, if any, must be served within the time period set by the administrative law judge.

§ 386.58 Burden of proof.

(a) *Enforcement cases.* The burden of proof shall be on the Administration in enforcement cases.

(b) *Conflict of medical opinion.* The burden of proof in cases arising under § 391.47 of this chapter shall be on the party petitioning for review under § 386.13(a).

Subpart E—Decision

§ 386.61 Decision.

After receiving the proposed findings of fact, conclusions of law, and arguments of the parties, the administrative law judge shall issue a decision. If the proposed findings of fact, conclusions of law, and arguments were oral, he/she may issue an oral decision. The decision of the administrative law judge becomes the final decision of the Associate Administrator 45 days after it is served unless a petition or motion for review is filed under § 386.62. The decision shall be served on all parties and on the Associate Administrator.

§ 386.62 Review of administrative law judge's decision.

(a) All petitions to review must be accompanied by exceptions and briefs. Each petition must set out in detail objections to the initial decision and shall state whether such objections are related to alleged errors of law or fact. It shall also state the relief requested. Failure to object to any error in the initial decision shall waive the right to allege such error in subsequent proceedings.

(b) Reply briefs may be filed within 30 days after service of the appeal brief.

(c) No other briefs shall be permitted except upon request of the Associate Administrator.

(d) Copies of all briefs must be served on all parties.

(e) No oral argument will be permitted except on order of the Associate Administrator.

§ 386.63 Decision on review.

Upon review of a decision, the Associate Administrator may adopt, modify, or set aside the administrative law judge's findings of fact and conclusions of law. He/she may also remand proceedings to the administrative law judge with instructions for such further proceedings as he/she deems appropriate. If not remanded, the Associate Administrator shall issue a final order disposing of the proceedings, and serve it on all parties.

§ 386.64 Reconsideration.

Within 20 days after the Associate Administrator's final order is issued, any party may petition the Associate Administrator for reconsideration of his/her findings of fact, conclusions of law, or final order. The filing of a petition for reconsideration does not stay the effectiveness of the final order unless the Associate Administrator so orders.

§ 386.65 Failure to comply with final order.

If, within 30 days of receipt of a final agency order issued under this part, the respondent does not submit in writing his/her acceptance of the terms of an order directing compliance, or, where appropriate, pay a civil penalty, or file an appeal under § 386.67, the case may be referred to the Attorney General with a request that an action be brought in the appropriate United States District Court to enforce the terms of a compliance order or collect the civil penalty.

§ 386.66 Motions for rehearing or for modification.

(a) No motion for rehearing or for modification of an order shall be entertained for 1 year following the date the Associate Administrator's order goes into effect. After 1 year, any party may file a motion with the Associate Administrator requesting a rehearing or modification of the order. The motion must contain the following:

(1) A copy of the order about which the change is requested;

(2) A statement of the changed circumstances justifying the request; and

(3) Copies of all evidence intended to be relied on by the party submitting the motion.

(b) Upon receipt of the motion, the Associate Administrator may make a decision denying the motion or modifying the order in whole or in part. He/she may also, prior to making his/her decision, order such other proceedings under these rules as he/she deems necessary and may request additional information from the party making the motion.

§ 386.67 Appeal.

Any aggrieved person, who, after a hearing, is adversely affected by a final order issued under 49 U.S.C. 521 may, within 30 days, petition for review of the order in the United States Court of Appeals in the circuit wherein the violation is alleged to have occurred or where the violator has his/her principal place of business or residence, or in the United States Court of Appeals for the District of Columbia Circuit. Review of the order shall be based on a determination of whether the Associate Administrator's findings and conclusions were supported by substantial evidence, or were otherwise not in accordance with law. No objection that has not been urged before the Associate Administrator shall be considered by the court, unless reasonable grounds existed for failure or neglect to do so. The commencement of proceedings under this section shall not, unless ordered by the court, operate as a stay of the order of the Associate Administrator.

Subpart F—Injunctions and Imminent Hazards

§ 386.71 Injunctions.

Whenever it is determined that a person has engaged, or is about to engage, in any act or practice constituting a violation of section 3102 of title 49, United States Code, or the Motor Carrier Safety Act of 1984, or the Hazardous Materials Transportation Act, or any regulation or order issued under that section or those Acts for which the Federal Highway Administrator exercises enforcement responsibility, the Chief Counsel or the Assistant Chief Counsel for Motor Carrier and Highway Safety Law may request the United States Attorney General to bring an action in the appropriate United States District Court for such relief as is necessary or appropriate, including mandatory or prohibitive injunctive relief, interim equitable relief, and punitive damages, as provided by section 213(c) of the Motor Carrier Safety Act of 1984 and section 111(a) of the Hazardous Materials Transportation Act (49 U.S.C. 507(c), 1810).

§ 386.72 Imminent hazard.

(a) Whenever it is determined that there is substantial likelihood that death, serious illness, or severe personal injury, will result from the transportation by motor vehicle of a particular hazardous material before a notice of investigation proceeding, or other administrative hearing or formal proceeding to abate the risk of harm can be completed, the Chief Counsel or the Assistant Chief Counsel for Motor Carrier and Highway Safety Law may bring, or request the United States Attorney General to bring, an action in the appropriate United States District Court for an order suspending or restricting the transportation by motor vehicle of the hazardous material or for such other order as is necessary to eliminate or ameliorate the imminent hazard, as provided by section 111(b) of the Hazardous Materials Transportation Act (49 U.S.C. 1810).

(b)(1) Whenever it is determined that a violation of 49 U.S.C. 3102 or the Motor Carrier Safety Act of 1984 or the Commercial Motor Vehicle Safety Act of 1986 or a regulation issued under

such section or Acts, or combination of such violations, poses an imminent hazard to safety, the Director, Motor Carrier Safety Field Operations or the Regional Director of Motor Carriers, or his or her delegate, shall order a vehicle or employee operating such vehicle out of service, or order an employer to cease all or part of the employer's commercial motor vehicle operations as provided by section 213(b) of the Motor Carrier Safety Act of 1984 and section 12012(d) of the Commercial Motor Vehicle Safety Act of 1986. (49 U.S.C. 521(b)(5)). In making any such order, no restrictions shall be imposed on any employee or employer beyond that required to abate the hazard. In this paragraph, ''imminent hazard'' means any condition of vehicle, employee, or commercial motor vehicle operations which is likely to result in serious injury or death if not discontinued immediately.

(2) Upon the issuance of an order under paragraph (b)(1) of this section, the motor carrier employer or driver employee shall comply immediately with such order. Opportunity for review shall be provided in accordance with 5 U.S.C. 554, except that such review shall occur not later than 10 days after issuance of such order, as provided by section 213(b) of the Motor Carrier Safety Act of 1984 (49 U.S.C. 521(b)(5)). An order to an employer to cease all or part of its operations shall not prevent vehicles in transit at the time the order is served from proceeding to their immediate destinations, unless any such vehicle or its driver is specifically ordered out of service forthwith. However, vehicles and drivers proceeding to their immediate destination shall be subject to compliance upon arrival.

(3) For purposes of this section the term ''immediate destination'' is the next scheduled stop of the vehicle already in motion where the cargo on board can be safely secured.

(4) Failure to comply immediately with an order issued under this section shall subject the motor carrier employer or driver to penalties prescribed in subpart G of this part.

[50 FR 40306, Oct. 2, 1985, as amended at 53 FR 2036, Jan. 26, 1988; 53 FR 50970, Dec. 19, 1988; 56 FR 10184, Mar. 11, 1991]

Subpart G—Penalties

SOURCE: 56 FR 10184, Mar. 11, 1991, unless otherwise noted.

§ 386.81 General.

(a) The maximum amounts of civil penalties that can be imposed for regulatory violations subject to the civil forfeiture proceedings in this part are set in the statutes authorizing the regulations. The determination of the actual civil penalties assessed in each proceeding is based on those defined limits and consideration of information available at the time the claim is made concerning the nature, circumstances, extent, and gravity of the violation and, with respect to the violator, the degree of culpability, history of prior offenses, ability to pay, effect on ability to continue to do business, and such other matters as justice and public safety may require. In adjudicating the claims and notices under the administrative procedures herein, additional information may be developed regarding those factors that may affect the final amount of the claim.

(b) When assessing penalties for violations of notices and orders or settling claims based on these assessments, consideration will be given to good faith efforts to achieve compliance with the terms of the notices and orders.

§ 386.82 Civil penalties for violations of notices and orders.

(a) Additional civil penalties are chargeable for violations of notices and orders which are issued under civil forfeiture proceedings pursuant to 49 U.S.C. 521(b). These notices and orders are as follows:

(1) Notice to abate—§ 386.11 (b)(2) and (c)(1)(iv);

(2) Notice to post—§ 386.11(b)(3);

(3) Final order—§ 386.14(f); and

(4) Out-of-service order—§ 386.72(b)(3).

(b) A schedule of these additional penalties is provided in the appendix A to this part. All the penalties are maximums, and discretion will be retained to meet special circumstances by setting penalties for violations of notices and orders, in some cases, at less than the maximum.

(c) Claims for penalties provided in this section and in the appendix A to this part shall be made through the civil forfeiture proceedings contained in this part. The issues to be decided in such proceedings will be limited to whether violations of notices and orders occurred as claimed and the appropriate penalty for such violations. Nothing contained herein shall be construed to authorize the reopening of a matter already finally adjudicated under this part.

APPENDIX A TO PART 386—PENALTY SCHEDULE; VIOLATIONS OF NOTICES AND ORDERS

I. Notice to Abate

a. *Violation*—failure to cease violations of the regulations in the time prescribed in the notice.

(The time within which to comply with a notice to abate shall not begin to run with respect to contested violations, i.e., where there are material issues in dispute under §386.14, until such time as the violation has been established.)

Penalty—reinstatement of any deferred assessment or payment of a penalty or portion thereof.

b. *Violation*—failure to comply with specific actions prescribed in a notice of investigation, compliance order or consent order, other than cessation of violations of the regulations, which were determined to be essential to abatement of future violations.

Penalty—$1,000 per violation per day.

Maximum—$10,000.

II. Notice to Post

Violation— Failure to post notice of violation (i.e., notice of investigation) as prescribed.

Penalty—$500 (A separate violation may be charged each time a failure to post as ordered is discovered.)

III. Final Order

Violation— Failure to comply with final agency order, i.e., failure to pay the penalty assessed therein after notice and opportunity for hearing within time prescribed in the order.

Penalty— Automatic waiver of any reduction in the original claim found to be valid, and immediate restoration to the full amount assessed in the Claim Letter or Notice of Investigation.

IV. Out-of-Service Order

a. *Violation*— Operation of a commercial vehicle by a driver during the period the driver was placed out of service.

Penalty— Up to $1,000 per violation.

(For purposes of this violation, the term ''driver'' means an operator of a commercial motor vehicle, including an independent contractor who, while in the course of operating a commercial motor vehicle, is employed or used by another person.)

b. *Violation*—Requiring or permitting a driver to operate a commercial vehicle during the period the driver was placed out of service.

Penalty— Up to $10,000 per violation.

(This violation applies to motor carriers, including an independent contractor who is not a ''driver,'' as defined under paragraph IVa above.)

c. *Violation*— Operation of a commercial motor vehicle by a driver after the vehicle was placed out of service and before the required repairs are made.

Penalty—$1,000 each time the vehicle is so operated.

(This violation applies to drivers as defined in IVa above.)

d. *Violation*— Requiring or permitting the operation of a commercial motor vehicle placed out of service before the required repairs are made.

Penalty— Up to $10,000 each time the vehicle is so operated after notice of the defect is received.

(This violation applies to motor carriers, including an independent owner-operator who is not a ''driver,'' as defined in IVa above.)

e. *Violation*— Failure to return written certification of correction as required by the out-of-service order.

Penalty— Up to $500 per violation.

f. *Violation*— Knowingly falsifies written certification of correction required by the out-of-service order.

Penalty— Considered the same as the violations described in paragraphs IVc and IVd above, and subject to the same penalties.

NOTE: Falsification of certification may also result in criminal prosecution under 18 U.S.C. 1001.

g. *Violation*— Operating in violation of an order issued under §386.72(b) to cease all or part of the employer's commercial motor vehicle operations, i.e., failure to cease operations as ordered.

Penalty— Up to $10,000 per day the operation continues after the effective date and time of the order to cease.

[56 FR 10184, Mar. 11, 1991]

PART 387—MINIMUM LEVELS OF FINANCIAL RESPONSIBILITY FOR MOTOR CARRIERS

Subpart A—Motor Carriers of Property

Sec.
387.1 Purpose and scope.
387.3 Applicability.
387.5 Definitions.
387.7 Financial responsibility required.
387.9 Financial responsibility, minimum levels.
387.11 State authority and designation of agent.
387.13 Fiduciaries.
387.15 Forms.
387.17 Violation and penalty.

Subpart B—Motor Carriers of Passengers

387.25 Purpose and scope.
387.27 Applicability.
387.29 Definitions.
387.31 Financial responsibility required.
387.33 Financial responsibility, minimum levels.
387.35 State authority and designation of agent.
387.37 Fiduciaries.
387.39 Forms.
387.41 Violation and penalty.

Subpart C—Surety Bonds and Policies of Insurance for Motor Carriers and Property Brokers

387.301 Surety bond, certificate of insurance, or other securities.
387.303 Security for the protection of the public: Minimum limits.
387.305 Combination vehicles.
387.307 Property broker surety bond or trust fund.
387.309 Qualifications as a self-insurer and other securities or agreements.
387.311 Bonds and certificates of insurance.
387.313 Forms and procedures.
387.315 Insurance and surety companies.
387.317 Refusal to accept, or revocation by the FHWA of surety bonds, etc.
387.319 Fiduciaries.
387.321 Operations in foreign commerce.
387.323 Electronic filing of surety bonds, trust fund agreements, certificates of insurance and cancellations.

Subpart D—Surety Bonds and Policies of Insurance for Freight Forwarders

387.401 Definitions.
387.403 General requirements.
387.405 Limits of liability.
387.407 Surety bonds and certificates of insurance.
387.409 Insurance and surety companies.
387.411 Qualifications as a self-insurer and other securities or agreements.
387.413 Forms and procedure.
387.415 Acceptance and revocation by the FHWA.
387.417 Fiduciaries.
387.419 Electronic filing of surety bonds, certificates of insurance and cancellations.

AUTHORITY: 49 U.S.C. 13101, 13301, 13906, 14701, 31138, and 31139; and 49 CFR 1.48.

Subpart A—Motor Carriers of Property

§ 387.1 Purpose and scope.

This subpart prescribes the minimum levels of financial responsibility required to be maintained by motor carriers of property operating motor vehicles in interstate, foreign, or intrastate commerce. The purpose of these regulations is to create additional incentives to motor carriers to maintain and operate their vehicles in a safe manner and to assure that motor carriers maintain an appropriate level of financial responsibility for motor vehicles operated on public highways.

[46 FR 30982, June 11, 1981, as amended at 48 FR 52683, Nov. 21, 1983]

§ 387.3 Applicability.

(a) This subpart applies to for-hire motor carriers operating motor vehicles transporting property in interstate or foreign commerce.

(b) This subpart applies to motor carriers operating motor vehicles transporting hazardous materials, hazardous substances, or hazardous wastes in interstate, foreign, or intrastate commerce.

(c) *Exception*. (1) The rules in this part do not apply to a motor vehicle that has a gross vehicle weight rating (GVWR) of less than 10,000 pounds. This exception does not apply if the vehicle is used to transport any quantity of a Division 1.1, 1.2, or 1.3 material, any quantity of a Division 2.3, Hazard Zone A, or Division 6.1, Packing Group I, Hazard Zone A, or to a highway route controlled quantity of a Class 7 material as it is defined in 49 CFR 173.403, in interstate or foreign commerce.

(2) The rules in this part do not apply to the transportation of non-bulk oil,

non-bulk hazardous materials, substances, or wastes in intrastate commerce, except that the rules in this part do apply to the transportation of a highway route controlled quantity of a Class 7 material as defined in 49 CFR 173.403, in intrastate commerce.

[46 FR 30982, June 11, 1981; 46 FR 45612, Sept. 14, 1981, as amended at 48 FR 5559, Feb. 7, 1983; 48 FR 52683, Nov. 21, 1983; 49 FR 38290, Sept. 28, 1984; 59 FR 63923, Dec. 12, 1994]

§387.5 Definitions.

As used in this subpart—

Accident includes continuous or repeated exposure to the same conditions resulting in public liability which the insured neither expected nor intended.

Bodily injury means injury to the body, sickness, or disease including death resulting from any of these.

Cancellation of insurance the withdrawal of insurance coverage by either the insurer or the insured.

Endorsement an amendment to an insurance policy.

Environmental restoration restitution for the loss, damage, or destruction of natural resources arising out of the accidental discharge, dispersal, release or escape into or upon the land, atmosphere, watercourse, or body of water of any commodity transported by a motor carrier. This shall include the cost of removal and the cost of necessary measure taken to minimize or mitigate damage to human health, the natural environment, fish, shellfish, and wildlife.

Evidence of security a surety bond or a policy of insurance with the appropriate endorsement attached.

Financial responsibility the financial reserves (e.g., insurance policies or surety bonds) sufficient to satisfy liability amounts set forth in this subpart covering public liability.

For-hire carriage transportation of property by motor vehicle except when—

(1) The property is transported by a person engaged in a business other than transportation; and

(2) The transportation is within the scope of, and furthers a primary business (other than transportation) of, the person.

In bulk—the transportation, as cargo, of property, except Division 1.1, 1.2, or 1.3 materials, and Division 2.3, Hazard Zone A gases, in containment systems with capacities in excess of 3500 water gallons.

In bulk (Division 1.1, 1.2, and 1.3 explosives)—the transportation, as cargo, of any Division 1.1, 1.2, or 1.3 materials in any quantity.

In bulk (Division 2.3, Hazard Zone A or Division 6.1, Packing Group I, Hazard Zone A materials)—the transportation, as cargo, of any Division 2.3, Hazard Zone A, or Division 6.1, packing Group I, Hazard Zone A material, in any quantity.

Insured and principal— the motor carrier named in the policy of insurance, surety bond, endorsement, or notice of cancellation, and also the fiduciary of such motor carrier.

Insurance premium the monetary sum an insured pays an insurer for acceptance of liability for public liability claims made against the insured.

Motor carrier a common, contract, or private carrier of property by motor vehicle.

Property damage means damage to or loss of use of tangible property.

Public liability liability for bodily injury or property damage and includes liability for environmental restoration.

State means a State of the United States, the District of Columbia, Puerto Rico, the Virgin Islands, American Samoa, Guam, and the Northern Mariana Islands.

[46 FR 30982, June 11, 1981; 46 FR 45612, Sept. 14, 1981; 47 FR 12801, Mar. 25, 1982, as amended at 48 FR 52683, Nov. 21, 1983; 51 FR 33856, Sept. 23, 1986; 53 FR 12160, Apr. 13, 1988; 59 FR 63923, Dec. 12, 1994; 62 FR 16709, Apr. 8, 1997]

§387.7 Financial responsibility required.

(a) No motor carrier shall operate a motor vehicle until the motor carrier has obtained and has in effect the minimum levels of financial responsibility as set forth in §387.9 of this subpart.

(b)(1) Policies of insurance, surety bonds, and endorsements required under this section shall remain in effect continuously until terminated. Cancellation may be effected by the insurer or the insured motor carrier giving 35 days' notice in writing to the other. The 35 days' notice shall commence to run from the date the notice

is mailed. Proof of mailing shall be sufficient proof of notice.

(2) *Exception*. Policies of insurance and surety bonds may be obtained for a finite period of time to cover any lapse in continuous compliance.

(3) *Exception*. Mexican motor carriers may meet the minimum financial responsibility requirements of this subpart by obtaining insurance coverage, in the required amounts, for periods of 24 hours or longer, from insurers that meet the requirements of § 387.11 of this subpart. A Mexican motor carrier so insured must have available for inspection in each of its vehicles copies of the following documents:

(i) The Certificate of Registration;

(ii) The required insurance endorsement (Form MCS–90); and

(iii) An insurance identification card, binder, or other document issued by an authorized insurer which specifies both the effective date and the expiration date of the temporary insurance coverage authorized by this exception.

Mexician motor carriers insured under this exception are also exempt from the notice of cancellation requirements stated on Form MCS–90.

(c) Policies of insurance and surety bonds required under this section may be replaced by other policies of insurance or surety bonds. The liability of the retiring insurer or surety, as to events after the termination date, shall be considered as having terminated on the effective date of the replacement policy of insurance or surety bond or at the end of the 35 day cancellation period required in paragraph (b) of this section, whichever is sooner.

(d) Proof of the required financial responsibility shall be maintained at the motor carrier's principal place of business. The proof shall consist of—

(1) ''Endorsement(s) for Motor Carrier Policies of Insurance for Public Liability Under Sections 29 and 30 of the Motor Carrier Act of 1980'' (Form MCS–90) issued by an insurer(s);

(2) A ''Motor Carrier Surety Bond for Public Liability Under Section 30 of the Motor Carrier Act of 1980'' (Form MCS–82) issued by a surety; or

(3) A written decision, order, or authorization of the Interstate Commerce Commission authorizing a motor carrier to self-insure under § 1043.5 of this title, provided the motor carrier maintains a satisfactory safety rating as determined by the Federal Highway Administration under part 385 of this title.

(e) The proof of minimum levels of financial responsibility required by this section shall be considered public information and be produced for review upon reasonable request by a member of the public.

(f) All vehicles operated within the United States by motor carriers domiciled in a contiguous foreign country, shall have on board the vehicle a legible copy, in English, of the proof of the required financial responsibility (Form MCS–90 or MCS–82) used by the motor carrier to comply with paragraph (d) of this section.

(g) Any motor vehicle in which there is no evidence of financial responsibility required by paragraph (f) of this section shall be denied entry into the United States.

[46 FR 30982, June 11, 1981; 46 FR 45612, Sept. 14, 1981, as amended at 48 FR 5559, Feb. 7, 1983; 48 FR 52683, Nov. 21, 1983; 51 FR 22083, June 18, 1986; 54 FR 49092, Nov. 29, 1989; 59 FR 63923, Dec. 12, 1994]

§ 387.9 Financial responsibility, minimum levels.

The minimum levels of financial responsibility referred to in § 387.7 of this subpart are hereby prescribed as follows:

SCHEDULE OF LIMITS—PUBLIC LIABILITY

Type of carriage	Commodity transported	Jan. 1, 1985
(1) For-hire (In interstate or foreign commerce, with a gross vehicle weight rating of 10,000 or more pounds).	Property (nonhazardous)	$750,000
(2) For-hire and Private (In interstate, foreign, or intrastate commerce, with a gross vehicle weight rating of 10,000 or more pounds).	Hazardous substances, as defined in 49 CFR 171.8, transported in cargo tanks, portable tanks, or hopper-type vehicles with capacities in excess of 3,500 water gallons; or in bulk Division 1.1, 1.2, and 1.3 materials, Division 2.3, Hazard Zone A, or Division 6.1, Packing Group I, Hazard Zone A material; in bulk Division 2.1 or 2.2; or highway route controlled quantities of a Class 7 material, as defined in 49 CFR 173.403.	5,000,000
(3) For-hire and Private (In interstate or foreign commerce, in any quantity; or in intrastate commerce, in bulk only; with a gross vehicle weight rating of 10,000 or more pounds).	Oil listed in 49 CFR 172.101; hazardous waste, hazardous materials, and hazardous substances defined in 49 CFR 171.8 and listed in 49 CFR 172.101, but not mentioned in (2) above or (4) below.	1,000,000
(4) For-hire and Private (In interstate or foreign commerce, with a gross vehicle weight rating of less than 10,000 pounds).	Any quantity of Division 1.1, 1.2, or 1.3 material; any quantity of a Division 2.3, Hazard Zone A, or Division 6.1, Packing Group I, Hazard Zone A material; or highway route controlled quantities of a Class 7 material as defined in 49 CFR 173.403.	5,000,000

[59 FR 63923, Dec. 12, 1994]

§ 387.11 State authority and designation of agent.

A policy of insurance or surety bond does not satisfy the financial responsibility requirements of this subpart unless the insurer or surety furnishing the policy or bond is—

(a) Legally authorized to issue such policies or bonds in each State in which the motor carrier operates; or

(b) Legally authorized to issue such policies or bonds in the State in which the motor carrier has its principal place of business or domicile, and is willing to designate a person upon whom process, issued by or under the authority of any court having jurisdiction of the subject matter, may be served in any proceeding at law or equity brought in any State in which the motor carrier operates; or

(c) Legally authorized to issue such policies or bonds in any State of the United States and eligible as an excess or surplus lines insurer in any State in which business is written, and is willing to designate a person upon whom process, issued by or under the authority of any court having jurisdiction of the subject matter, may be served in any proceeding at law or equity brought in any State in which the motor carrier operates.

[46 FR 30982, June 11, 1981, as amended at 48 FR 52683, Nov. 21, 1983]

§ 387.13 Fiduciaries.

The coverage of fiduciaries shall attach at the moment of succession of such fiduciaries.

[46 FR 30982, June 11, 1981]

§ 387.15 Forms.

Endorsements for policies of insurance (Illustration I) and surety bonds (Illustration II) must be in the form prescribed by the FHWA and approved by the OMB. Endorsements to policies of insurance and surety bonds shall specify that coverage thereunder will remain in effect continuously until terminated, as required in § 387.7 of this subpart. The continuous coverage requirement does not apply to Mexican motor carriers insured under § 387.7(b)(3) of this subpart. The endorsement and surety bond shall be issued in the exact name of the motor carrier.

ILLUSTRATION I

Form MCS–90 (3/82)
Form Approved
OMB No. 2125–0074

ENDORSEMENT FOR MOTOR CARRIER POLICIES OF INSURANCE FOR PUBLIC LIABILITY UNDER SECTIONS 29 AND 30 OF THE MOTOR CARRIER ACT OF 1980

Issued to _____
of _____
Dated at _____
this ___ day of _____, 19___
Amending Policy No. _____
Effective Date _____
Name of Insurance Company _____
Countersigned by _____
Authorized Company Representative

The policy to which this endorsement is attached provides primary or excess insurance, as indicated by ''X'', for the limits shown:

☐ This insurance is primary and the company shall not be liable for amounts in excess of $_____ for each accident.

☐ This insurance is excess and the company shall not be liable for amounts in excess of $_____ for each accident in excess of the underlying limit of $_____ for each accident.

Whenever required by the FHWA or the ICC the company agrees to furnish the FHWA or the ICC a duplicate of said policy and all its endorsements. The company also agrees, upon telephone request by an authorized representative of the FHWA or the ICC, to verify that the policy is in force as of a particular date. The telephone number to call is: _____

Cancellation of this endorsement may be effected by the company or the insured by giving (1) thirty-five (35) days notice in writing to the other party (said 35 days notice to commence from the date the notice is mailed, proof of mailing shall be sufficient proof of notice), and (2) if the insured is subject to the ICC's jurisdiction, by providing thirty (30) days notice to the ICC (said 30 days notice to commence from the date the notice is received by the ICC at its office in Washington, DC).

DEFINITIONS AS USED IN THIS ENDORSEMENT

Accident includes continuous or repeated exposure to conditions which results in bodily injury, property damage, or environmental damage which the insured neither expected or intended.

Motor Vehicle means a land vehicle, machine, truck, tractor, trailer, or semitrailer propelled or drawn by mechanical power and

used on a highway for transporting property, or any combination thereof.

Bodily Injury means injury to the body, sickness, or disease to any person, including death resulting from any of these.

Environmental Restoration means restitution for the loss, damage, or destruction of natural resources arising out of the accidental discharge, dispersal, release or escape into or upon the land, atmosphere, watercourse, or body of water, of any commodity transported by a motor carrier. This shall include the cost of removal and the cost of necessary measures taken to minimize or mitigate damage to human health, the natural environment, fish, shellfish, and wildlife.

Property Damage means damage to or loss of use of tangible property.

Public Liability means liability for bodily injury, property damage, and environmental restoration.

The insurance policy to which this endorsement is attached provides automobile liability insurance and is amended to assure compliance by the insured, within the limits stated herein, as a motor carrier of property, with sections 29 and 30 of the Motor Carrier Act of 1980 and the rules and regulations of the Federal Highway Administration and the Interstate Commerce Commission (ICC).

In consideration of the premium stated in the policy to which this endorsement is attached, the insurer (the company) agrees to pay, within the limits of liability described herein, any final judgment recovered against the insured for public liability resulting from negligence in the operation, maintenance or use of motor vehicles subject to the financial responsibility requirements of sections 29 and 30 of the Motor Carrier Act of 1980 regardless of whether or not each motor vehicle is specifically described in the policy and whether or not such negligence occurs on any route or in any territory authorized to be served by the insured or elsewhere. Such insurance as is afforded, for public liability, does not apply to injury to or death of the insured's employees while engaged in the course of their employment, or property transported by the insured, designated as cargo. It is understood and agreed that no condition, provision, stipulation, or limitation contained in the policy, this endorsement, or any other endorsement thereon, or violation thereof, shall relieve the company from liability or from the payment of any final judgment, within the limits of liability herein described, irrespective of the financial condition, insolvency or bankruptcy of the insured. However, all terms, conditions, and limitations in the policy to which the endorsement is attached shall remain in full force and effect as binding between the insured and the company. The insured agrees to reimburse the company for any payment made by the company on account of any accident, claim, or suit involving a breach of the terms of the policy, and for any payment that the company would not have been obligated to make under the provisions of the policy except for the agreement contained in this endorsement.

It is further understood and agreed that, upon failure of the company to pay any final judgment recovered against the insured as provided herein, the judgment creditor may maintain an action in any court of competent jurisdiction against the company to compel such payment.

The limits of the company's liability for the amounts prescribed in this endorsement apply separately to each accident and any payment under the policy because of any one accident shall not operate to reduce the liability of the company for the payment of final judgments resulting from any other accident.

ILLUSTRATION II

Form MCS–82 (4/83)

(Form approved by Office of Management and Budget under control no. 2125–0075)

MOTOR CARRIER PUBLIC LIABILITY SURETY BOND UNDER SECTIONS 29 AND 30 OF THE MOTOR CARRIER ACT OF 1980

Parties	Surety company and principal place of business address	Motor carrier principal, ICC Docket No. and principal place of business
	.....	.....
	.....	.....
	.....	.....
	.....	.....

Purpose— This is an agreement between the Surety and the Principal under which the Surety, its successors and assigness, agree to be responsible for the payment of any final judgment or judgments against the Principal for public liability, property damage, and environmental restoration liability claims in the sums prescribed herein; subject to the governing provisions and the following conditions.

Governing provisions—(1) Sections 29 and 30 of the Motor Carrier Act of 1980 (49 U.S.C. 10927 note).

(2) Rules and regulations of the Federal Highway Administration.

(3) Rules and regulations of the Interstate Commerce Commission (ICC).

Conditions— The Principal is or intends to become a motor carrier of property subject to the applicable governing provisions relating to financial responsibility for the protection of the public.

This bond assures compliance by the Principal with the applicable governing provisions, and shall inure to the benefit of any person or persons who shall recover a final judgment or judgments against the Principal

for public liability, property damage, or environmental restoration liability claims (excluding injury to or death of the Principal's employees while engaged in the course of their employment, and loss of or damange to property of the principal, and the cargo transported by the Principal). If every final judgment shall be paid for such claims resulting from the negligent operation, maintenance, or use of motor vehicles in transportation subject to the applicable governing provisions, then this obligation shall be void, otherwise it will remain in full effect.

Within the limits described herein, the Surety extends to such losses regardless of whether such motor vehicles are specifically described herein and whether occurring on the route or in the territory authorized to be served by the Principal or elsewhere.

The liability of the Surety on each motor vehicle subject to the financial responsibility requirements of Section's 29 and 30 of the Motor Carrier Act of 1980 for each accident shall not exceed $_____, and shall be a continuing one notwithstanding any recovery hereunder.

The surety agrees, upon telephone request by an authorized representative of the FHWA or the ICC, to verify that the surety bond is in force as of a particular date. The telephone number is: _____

This bond is effective from _____ (12:01 a.m., standard time, at the address of the Principal as stated herein) and shall countine in force until terminated as described herein. The principal or the Surety may at any time terminate this bond by giving (1) thirty five (35) days notice in writing to the other party (said 35 day notice to commence from the date the notice is mailed, proof of mailing shall be sufficient proof of notice), and (2) if the Principal is subject to the ICC's jurisdiction, by providing thirty (30) days notice to the ICC (said 30 days notice to commence from the date notice is received by the ICC at its office in Washington, DC). The Surety shall not be liable for the payment of any judgment or judgments against the Principal for public liability, property damage, or environmental restoration claims resulting from accidents which occur after the termination of this bond as described herein, but such termination shall not affect the liability of the Surety for the payment of any such judgment or judgments resulting from accidents which occur during the time the bond is in effect.

(AFFIX CORPORATE SEAL)

Date _____

Surety _____

City _____

State _____

By _____

ACKNOWLEDGEMENT OF SURETY

State of _____

County of _____

On this _____ day of _____, 19___, before me personally came _____, who, being by me duly sworn, did depose and say that he/she resides in _____; that he/she is the _____ of the _____, the corporation described in and which executed the foregoing instrument; that he/she knows the seal of said corporation, that the seal affixed to said instrument is such corporate seal, that it was so affixed by order of the board of directors of said corporation, that he/she signed his/her name thereto by like order, and he/she duly acknowledged to me that he/she executed the same for and on behalf of said corporation.

(OFFICIAL SEAL)

_____

Title of official administering oath _____

Surety Company File No. _____

[46 FR 30982, June 11, 1981, as amended at 48 FR 52683, Nov. 21, 1983; 49 FR 27292, July 2, 1984; 49 FR 38290, Sept. 28, 1984; 51 FR 33856, Sept. 23, 1986; 53 FR 12160, Apr. 13, 1988; 54 FR 49092, Nov. 29, 1989; 59 FR 63924, Dec. 12, 1994]

§ 387.17 Violation and penalty.

Any person (except an employee who acts without knowledge) who knowingly violates the rules of this subpart shall be liable to the United States for civil penalty of no more than $10,000 for each violation, and if any such violation is a continuing one, each day of violation will constitute a separate offense. The amount of any such penalty shall be assessed by the FHWA's Associate Administrator for the Office of Motor Carriers, by written notice. In determining the amount of such penalty, the Associate Administrator, or his/her authorized delegate shall take into account the nature, circumstances, extent, the gravity of the violation committed and, with respect to the person found to have committed such violation, the degree of culpability, any history of prior offenses, ability to pay, effect on ability to continue to do business, and such other matters as justice may require.

[59 FR 63924, Dec. 12, 1994]

Subpart B—Motor Carriers of Passengers

SOURCE: 48 FR 52683, Nov. 21, 1983, unless otherwise noted.

§ 387.25 Purpose and scope.

This subpart prescribes the minimum levels of financial responsibility required to be maintained by for-hire motor carriers of passengers operating motor vehicles in interstate or foreign commerce. The purpose of these regulations is to create additional incentives to carriers to operate their vehicles in a safe manner and to assure that they maintain adequate levels of financial responsibility.

§ 387.27 Applicability.

(a) This subpart applies to for-hire motor carriers transporting passengers in interstate or foreign commerce.

(b) *Exception.* The rules in this subpart do not apply to—

(1) A motor vehicle transporting only school children and teachers to or from school;

(2) A motor vehicle providing taxicab service and having a seating capacity of less than 7 passengers and not operated on a regular route or between specified points; and

(3) A motor vehicle carrying less than 16 individuals in a single daily round trip to commute to and from work.

§ 387.29 Definitions.

As used in this subpart—

Accident includes continuous or repeated exposure to the same conditions resulting in public liability which the insured neither expected nor intended.

Bodily injury means injury to the body, sickness, or disease including death resulting from any of these.

Endorsement an amendment to an insurance policy.

Financial responsibility the financial reserves (e.g., insurance policies or surety bonds) sufficient to satisfy liability amounts set forth in this subpart covering public liability.

For hire carriage transportation performed by a motor carrier.

Insured and principal the motor carrier named in the policy of insurance, surety bond, endorsement, or notice of cancellation, and also the fiduciary of such motor carrier.

Insurance premium the monetary sum an insured pays an insurer for acceptance of liability for public liability claims made against the insured.

Motor carrier means a motor common carrier and a motor contract carrier.

Motor common carrier Means a person holding itself out to the general public to provide motor vehicle transportation of passengers for compensation over regular or irregular routes.

Motor contract carrier means a person, other than a motor common carrier, providing motor vehicle transportation of passengers for compensation under continuing agreement with a person or limited number of persons.

Property damage means damage to or loss of use of tangible property.

Public liability liability for bodily injury or property damage.

Seating capacity any plan view location capable of accommodating a person at least as large as a 5th percentile adult female, if the overall seat configuration and design and vehicle design is such that the position is likely to be used as a seating position while the vehicle is in motion, except for auxiliary seating accommodations such as temporary or folding jump seats. Any bench or split bench seat in a passenger car, truck or multi-purpose passenger vehicle with a gross vehicle weight rating less than 10,000 pounds, having greater than 50 inches of hip room (measured in accordance with SEA Standards J1100(a)) shall have not less than three designated seating positions, unless the seat design or vehicle design is such that the center position cannot be used for seating.

§ 387.31 Financial responsibility required.

(a) No motor carrier shall operate a motor vehicle transporting passengers until the motor carrier has obtained and has in effect the minimum levels of financial responsibility as set forth in § 387.33 of this subpart.

(b) Policies of insurance, surety bonds, and endorsements required under this section shall remain in effect continuously until terminated.

(1) Cancellation may be effected by the insurer or the insured motor carrier giving 35 days notice in writing to the other. The 35 days notice shall commence to run from the date the notice is mailed. Proof of mailing shall be sufficient proof of notice.

(2) *Exception*. Policies of insurance and surety bonds may be obtained for a finite period of time to cover any lapse in continuous compliance.

(3) *Exception*. Mexican motor carriers may meet the minimum financial responsibility requirements of this subpart by obtaining insurance coverage, in the required amounts, for periods of 24 hours or longer, from insurers that meet the requirements of § 387.35 of this subpart. A Mexican motor carrier so insured must have available for inspection in each of its vehicles copies of the following documents:

(i) The required insurance endorsement (Form MCS–90B); and

(ii) An insurance identification card, binder, or other document issued by an authorized insurer which specifies both the effective date and the expiration date of the temporary insurance coverage authorized by this exception.

Mexican motor carriers insured under this exception are also exempt from the notice of cancellation requirements stated on Form MCS–90B.

(c) Policies of insurance and surety bonds required under this section may be replaced by other policies of insurance or surety bonds. The liability of retiring insurer or surety, as to events after the termination date, shall be considered as having terminated on the effective date of the replacement policy of insurance or surety bond or at the end or the 35 day cancellation period required in paragraph (b) of this section, whichever is sooner.

(d) Proof of the required financial responsibility shall be maintained at the motor carrier's principal place of business. The proof shall consist of—

(1) ''Endorsement(s) for Motor Carriers of Passengers Policies of Insurance for Public Liability Under Section 18 of the Bus Regulatory Reform Act of 1982'' (Form MCS–90B) issued by an insurer(s); or

(2) A ''Motor Carrier of Passengers Surety Bond for Public Liability Under Section 18 of the Bus Regulatory Reform Act of 1982'' (Form MCS–82B) issued by a surety.

(e) The proof of minimum levels of financial responsibility required by this section shall be considered public information and be produced for review upon reasonable request by a member of the public.

(f) All passenger carrying vehicles operated within the United States by motor carriers domiciled in a contiguous foreign country, shall have on board the vehicle a legible copy, in English, of the proof of the required financial responsibility (Forms MCS–90B or MCS–82B) used by the motor carrier to comply with paragraph (d) of this section.

(g) Any motor vehicle in which there is no evidence of financial responsibility required by paragraph (f) of this section shall be denied entry into the United States.

[48 FR 52683, Nov. 21, 1983, as amended at 50 FR 7062, Feb. 20, 1985; 54 FR 49092, Nov. 29, 1989; 60 FR 38743, July 28, 1995]

§ 387.33 Financial responsibility, minimum levels.

The minimum levels of financial responsibility referred to in § 387.31 of this subpart are hereby prescribed as follows:

SCHEDULE OF LIMITS

Public Liability

For-hire motor carriers of passengers operating in interstate or foreign commerce.

Vehicle seating capacity	Effective dates	
	Nov. 19, 1983	Nov. 19, 1985
(1) Any vehicle with a seating capacity of 16 passengers or more	$2,500,000	$5,000,000
(2) Any vehicle with a seating capacity of 15 passengers or less[1]	750,000	1,500,000

[1] Except as provided in § 387.27(b).

§ 387.35 State authority and designation of agent.

A policy of insurance or surety bond does not satisfy the financial responsibility requirements of this subpart unless the insurer or surety furnishing the policy or bond is—

(a) Legally authorized to issue such policies or bonds in each State in which the motor carrier operates, or

(b) Legally authorized to issue such policies or bonds in the State in which the motor carrier has its principal place of business or domicile, and is willing to designate a person upon whom process, issued by or under the

authority of any court having jurisdiction of the subject matter, may be served in any proceeding at law or equity brought in any State in which the motor carrier operates; or

(c) Legally authorized to issue such policies or bonds in any State of the United States and eligible as an excess or surplus lines insurer in any State in which business is written, and is willing to designate a person upon whom process, issued by or under the authority of any court having jurisdiction of the subject matter, may be served in any proceeding at law or equity brought in any State in which the motor carrier operates..

§ 387.37 Fiduciaries.

The coverage of fiduciaries shall attach at the moment of succession of such fiduciaries.

§ 387.39 Forms.

Endorsements for policies of insurance (Illustration I) and surety bonds (Illustration II) must be in the form prescribed by the FHWA and approved by the OMB. Endorsements to policies of insurance and surety bonds shall specify that coverage thereunder will remain in effect continuously until terminated, as required in § 387.31 of this subpart. The continuous coverage requirement does not apply to Mexican motor carriers insured under § 387.31(b)(3) of this subpart. The endorsement and surety bond shall be issued in the exact name of the motor carrier.

U.S. Department of Transportation
Federal Highway Administration

Expiration Date:
Form Approved
OMB No.

ENDORSEMENT FOR
MOTOR CARRIER POLICIES OF INSURANCE FOR PUBLIC LIABILITY
UNDER SECTION 18 OF THE BUS REGULATORY REFORM ACT OF 1982

Issued to _____ of _____

Dated at _____ this _____ day of _____, 19____

Amending Policy No. _____ Effective Date _____

Name of Insurance Company _____

Countersigned by _____
Authorized Company Representative

The policy to which this endorsement is attached provides primary or excess insurance, as indicated by "☒", for the limits shown:

☐ This insurance is primary and the company shall not be liable for amounts in excess of $ _____ for each accident.

☐ This insurance is excess and the company shall not be liable for amounts in excess of $ _____ for each accident in excess of the underlying limit of $ _____ for each accident.

Whenever required by the Bureau or the ICC, the company agrees to furnish the Bureau or the ICC a duplicate of said policy and all its endorsements. The company also agrees, upon telephone request by an authorized representative of the Bureau or the ICC, to verify that the policy is in force as of a particular date. The telephone number to call is: _____

Cancellation of this endorsement may be effected by the company or the insured by giving (1) thirty-five (35) days notice in writing to the other party (said 35 days notice to commence from the date the notice is mailed, proof of mailing shall be sufficient proof of notice), and (2) if the insured is subject to the ICC's jurisdiction, by providing thirty (30) days notice to the ICC (said 30 days notice to commence from the date the notice is received by the ICC at its office in Washington, D.C.).

DEFINITIONS AS USED IN THIS ENDORSEMENT

ACCIDENT includes continuous or repeated exposure to conditions which results in Public Liability which the insured neither expected not intended.

BODILY INJURY means injury to the body, sickness, or disease to any person, including death resulting from any of these.

MOTOR CARRIER means a for-hire carrier of passengers by motor vehicle.

PROPERTY DAMAGE means damage to or loss of use of tangible property.

PUBLIC LIABILITY means liability for bodily injury or property damage.

The insurance policy to which this endorsement is attached provides automobile liability insurance and is amended to assure compliance by the insured, within the limits stated herein, as a for-hire motor carrier of passengers with Section 18 of the Bus Regulatory Reform Act of 1982 and the rules and regulations of the Federal Highway Administration's Bureau of Motor Carrier Safety (Bureau) and the Interstate Commerce Commission (ICC).

In consideration of the premium stated in the policy to which this endorsement is attached, the insurer (the company) agrees to pay, within the limits of liability described herein, any final judgment recovered against the insured for public liability resulting from negligence in the operation, maintenance or use of motor vehicles subject to financial responsibility requirements of Section 18 of the Bus Regulatory Reform Act of 1982 regardless of whether or not each motor vehicle is specifically described in the policy and whether or not such negligence occurs on any route or in any territory authorized to be served by the insured or elsewhere. Such insurance as is afforded, for public liability, does not apply to injury to or death of the insured's employees while engaged in the course of their employment, or property transported by the insured, designated as cargo. It is understood and agreed that no condition, provision, stipulation, or limitation contained in the policy, this endorsement, or any other endorsement thereon, or violation thereof, shall relieve the company from liability or from the payment of any final judgment, within the limits of liability herein described, irrespective of the financial condition, insolvency or bankruptcy of the insured. However, all terms, conditions, and limitations in the policy to which the endorsement is attached shall remain in full force and effect as binding between the insured and the company. The insured agrees to reimburse the company for any payment made by the company on account of any accident, claim, or suit involving a breach of the terms of the policy, and for any payment that the company would not have been obligated to make under the provisions of the policy except for the agreement contained in this endorsement.

It is further understood and agreed that, upon failure of the company to pay any final judgment recovered against the insured as provided herein, the judgment creditor may maintain an action in any court of competent jurisdiction against the company to compel such payment.

The limits of the company's liability for the amounts prescribed in this endorsement apply separately to each accident and any payment under the policy because of any one accident shall not operate to reduce the liability of the company for the payment of final judgments resulting from any other accident.

The Bus Regulatory Reform Act of 1982 requires limits of financial responsibility according to vehicle seating capacity. It is the MOTOR CARRIER'S obligation to obtain the required limits of financial responsibility.
THE SCHEDULE OF LIMITS SHOWN ON THE REVERSE SIDE DOES NOT PROVIDE COVERAGE.
The limits shown in the schedule are for information purposes only.

SCHEDULE OF LIMITS
Public Liability
For-hire motor carriers of passengers operating in interstate or foreign commerce

Vehicle Seating Capacity	Effective Dates	
	Nov. 19, 1983	Nov. 19, 1985
(1) Any vehicle with a seating capacity of 16 passengers or more.	$2,500,000	$5,000,000
(2) Any vehicle with a seating capacity of 15 passengers or less.	$ 750,000	$1,500,000

U.S. Department of Transportation
Federal Highway Administration

Form Approved
OMB No.

MOTOR CARRIER PUBLIC LIABILITY SURETY BOND
UNDER SECTION 18 OF THE BUS REGULATORY REFORM ACT OF 1982

PARTIES

Surety Company and Principal Place of Business Address	Motor Carrier Principal, I.C.C. Docket No., and Principal Place of Business Address
_____	_____
_____	_____
_____	_____
_____	_____

PURPOSE

This is an agreement between the Surety and the Principal under which the Surety, its successors and assignees, agree to be responsible for the payment of any final judgment or judgments against the Principal for public liability and property damage claims in the sums prescribed herein, subject to the governing provisions and following conditions.

GOVERNING PROVISIONS

(1) Section 18 of the Bus Regulatory Reform Act of 1982
(2) Rules and regulations of the Federal Highway Administration's Bureau of Motor Carrier Safety (Bureau)
(3) Rules and regulations of the Interstate Commerce Commission (ICC)

CONDITIONS

The Principal is or intends to become a motor carrier of passengers subject to the applicable governing provisions relating to financial responsibility for the protection of the public.

This bond assures compliance by the Principal with the applicable governing provisions, and shall inure to the benefit of any person or persons who shall recover a final judgment or judgments against the Principal for public liability or property damage claims (excluding injury to or death of the Principal's employees while engaged in the course of their employment, and loss of or damage to property of the Principal, and the cargo transported by the Principal). If every final judgment shall be paid for such claims resulting from the negligent operation, maintenance, or use of motor vehicles in transportation subject to the applicable governing provisions, then this obligation shall be void, otherwise it will remain in full effect.

Within the limits described herein, the Surety extends to such losses regardless of whether such motor vehicles are specifically described herein and whether occurring on the route or in the territory authorized to be served by the Principal or elsewhere.

The liability of the Surety for each motor vehicle subject to the applicable governing provisions for each accident shall not exceed $_____, and shall be a continuing one notwithstanding any recovery thereunder.

The surety agrees, upon telephone request by an authorized representative of the Bureau or ICC, to verify that the surety bond is in force as of a particular date. The telephone number to call is: _____.

This bond is effective from _____ (12:01 a.m., standard time, at the address of the Principal as stated herein) and shall continue in force until terminated as described herein. The Principal or the Surety may at any time terminate this bond by giving (1) thrity five (35) days notice in writing to the other party (said 35 days notice to commence from the date the notice is mailed, proof of mailing shall be sufficient proof of notice), and (2) if the Principal is subject to the ICC's jurisdiction, by providing thirty (30) days notice to the ICC (said 30 days notice to commence from the date notice is received by the ICC at its office in Washington, D.C.). The Surety shall not be liable for the payment of any judgment or judgments against the Principal for public liability or property damage claims resulting from accidents which occur after the termination of this bond as described herein, but such termination shall not affect the liability of the Surety from the payment of any such judgment or judgments resulting from accidents which occur during the time the bond is in effect.

_____
Date

(AFFIX CORPORATE SEAL)

_____
Surety

_____, _____
City *State*

By _____

ACKNOWLEDGMENT OF SURETY

STATE OF _____ COUNTY OF _____

On this _____ day of _____, 19____, before me personally came _____, who, being by me duly sworn, did depose and say that he resides in _____; that he is the _____ of the _____, the corporation described in and which executed the foregoing instrument; that he knows the seal of said corporation; that the seal affixed to said instrument is such corporate seal; that it was so affixed by order of the board of directors of said corporation; that he signed his name thereto by like order, and he duly acknowledged to me that he executed the same for an on behalf of said corporation.

_____

_____
Title of offical administering oath

(OFFICIAL SEAL)

Surety Company File No. _____

Form MCS-82B
(11-83)

(Approved by the Office of Management and Budget under control number 2125–0518)

[48 FR 52683, Nov. 21, 1983, as amended at 49 FR 22326, May 29, 1984; 54 FR 49093, Nov. 29, 1989]

§ 387.41 Violation and penalty.

Any person (except an employee who acts without knowledge) who knowingly violates the rules of this subpart shall be liable to the United States for civil penalty of no more than $10,000 for each violation, and if any such violation is a continuing one, each day of violation will constitute a separate offense. The amount of any such penalty shall be assessed by the Associate Administrator for Motor Carriers or his/her designee, by written notice. In determining the amount of such penalty, the Associate Administrator or his/her designee shall take into account the nature, circumstances, extent, the gravity of the violation committed and, with respect to the person found to have committed such violation, the degree of culpability, any history of prior offenses, ability to pay, effect on ability to continue to do business, and such other matters as justice may require.

[53 FR 47543, Nov. 23, 1988]

Subpart C—Surety Bonds and Policies of Insurance for Motor Carriers and Property Brokers

AUTHORITY 49 U.S.C. 10101, 10321, 11701, 10927; 5 U.S.C. 553.

SOURCE: 32 FR 20032, Dec. 20, 1967, unless otherwise noted. Redesignated at 61 FR 54709, Oct. 21, 1996.

CROSS REFERENCE: Prescribed forms relating to this part are listed in 49 CFR part 1003.

§ 387.301 Surety bond, certificate of insurance, or other securities.

(a) *Public liability*. (1) No common or contract carrier or foreign (Mexican) motor private carrier or foreign motor carrier transporting exempt commodities subject to subchapter II, chapter 105, subtitle IV of title 49 of the U.S. Code shall engage in interstate or foreign commerce, and no certificate or permit shall be issued to such a carrier or remain in force unless and until there shall have been filed with and accepted by the Commission surety bonds, certificates of insurance, proof of qualifications as self-insurer, or other securities or agreements, in the amounts prescribed in § 387.303, conditioned to pay any final judgment recovered against such motor carrier for bodily injuries to or the death of any person resulting from the negligent operation, maintenance or use of motor vehicles in transportation subject to subchapter II, chapter 105, subtitle IV of title 49 of the U.S. Code, or for loss of or damage to property of others, or, in the case of motor carriers of property operating freight vehicles described in § 387.303(b)(2) of this part, for environmental restoration.

(2) Motor Carriers of property which are subject to the conditions set forth in paragraph (a)(1) of this section and transport the commodities described in § 387.303(b)(2), are required to obtain security in the minimum limits prescribed in § 387.303(b)(2).

(b) *Common carriers-cargo insurance; exempt commodities.* No common carrier by motor vehicle subject to subchapter II, chapter 105, subtitle IV of title 49 of the U.S. Code nor any foreign (Mexican) common carrier of exempt commodities shall engage in interstate or foreign commerce, nor shall any certificate be issued to such a carrier or remain in force unless and until there shall have been filed with and accepted by the Commission, a surety bond, certificate of insurance, proof of qualifications as a self-insurer, or other securities or agreements in the amounts prescribed in § 387.303, conditioned upon such carrier making compensation to shippers or consignees for all property belonging to shippers or consignees and coming into the possession of such carrier in connection with its transportation service: *Provided,* That the requirements of this paragraph shall not apply in connection with the transportation of the following commodities:

Agricultural ammonium nitrate.
Agricultural nitrate of soda.
Anhydrous ammonia—used as a fertilizer only.
Ashes, wood or coal.
Bituminous concrete (also known as blacktop or amosite), including mixtures of asphalt paving.

Cement, dry, in containers or in bulk.
Cement, building blocks.
Charcoal.
Chemical fertilizer.
Cinder blocks.
Cinders, coal.
Coal.
Coke.
Commercial fertilizer.
Concrete materials and added mixtures.
Corn cobs.
Cottonseed hulls.
Crushed stone.
Drilling salt.
Dry fertilizer.
Fish scrap.
Fly ash.
Forest products; viz: Logs, billets, or bolts, native woods, Canadian wood or Mexican pine; pulpwood, fuel wood, wood kindling; and wood sawdust or shavings (shingle tow) other than jewelers' or paraffined.
Foundry and factory sweepings.
Garbage.
Gravel, other than bird gravel.
Hardwood and parquet flooring.
Haydite.
Highway construction materials, when transported in dump trucks and unloaded at destination by dumping.
Ice.
Iron ore.
Lime and limestone.
Liquid fertilizer solutions, in bulk, in tank vehicles.
Lumber.
Manure.
Meat scraps.
Mud drilling salt.
Ores, in bulk, including ore concentrates.
Paving materials, unless contain oil hauled in tank vehicles.
Peat moss.
Peeler cores.
Plywood.
Poles and piling, other than totem poles.
Potash, used as commercial fertilizer.
Pumice stone, in bulk in dump vehicles.
Salt, in bulk or in bags.
Sand, other than asbestos, bird, iron, monazite, processed, or tobacco sand.
Sawdust.
Scoria stone.
Scrap iron.
Scrap steel.
Shells, clam, mussel, or oyster.
Slag, other than slag with commercial value for the further extraction of metals.
Slag, derived aggregates—cinders.
Slate, crushed or scrap.
Slurry, as waste material.
Soil, earth or marl, other than infusorial, diatomaceous, tripoli, or inoculated soil or earth.
Stone, unglazed and unmanufactured, including ground agricultural limestone.
Sugar beet pulp.
Sulphate of ammonia, bulk, used as fertilizer.
Surfactants.
Trap rock.
Treated poles.
Veneer.
Volcanic scoria.
Waste, hazardous and nonhazardous, transported solely for purposes of disposal.
Water, other than mineral or prepared—water.
Wood chips, not processed.
Wooden pallets, unassembled.
Wreck or disabled motor vehicles.
Other materials or commodities of low value, upon specific application to and approval by the Commission.

(c) *Continuing compliance required.* Such security as is accepted by the Commission in accordance with the requirements of section 10927, subchapter II, chapter 109, subtitle IV of title 49 of the U.S. Code, shall remain in effect at all times.

[48 FR 51780, Nov. 14, 1983, as amended at 60 FR 63981, Dec. 13, 1995; 62 FR 49941, Sept. 24, 1997]

§ 387.303 Security for the protection of the public: Minimum limits.

(a) *Definitions.* (1) *Primary security* means public liability coverage provided by the insurance or surety company responsible for the first dollar of coverage.

(2) *Excess security* means public liability coverage above the primary security, or above any additional underlying security, up to and including the required minimum limits set forth in paragraph (b)(2) of this section.

(b)(1) Motor carriers subject to § 387.301(a)(1) are required to have security for the required minimum limits as follows:

(i) *Small freight vehicles:*

Kind of equipment	Transportation provided	Minimum limits
Fleet including only vehicles under 10,000 pounds GVWR.	Commodities not subject to § 387.303(b)(2).	$300,000

(ii) *Passenger carriers*

Kind of Equipment

Vehicle seating capacity	Effective dates	
	Nov. 19, 1983	Nov. 19, 1985
(1) Any vehicle with a seating capacity of 16 passengers or more	$2,500,000	$5,000,000
(2) Any vehicle with a seating capacity of 15 passengers or less	750,000	1,500,000

(2) Motor carriers subject to § 387.301(a)(2) are required to have security for the required minimum limits as follows:

Kind of equipment	Commodity transported	July 1, 1983*	July 1, 1984*
(a) Freight Vehicles of 10,000 Pounds or More GVWR.	Property (non-hazardous)	$500,000	$750,000
(b) Freight Vehicles of 10,000 Pounds or More GVWR.	Hazardous substances, as defined in § 171.8, transported in cargo tanks, portable tanks, or hopper-type vehicles with capacities in excess of 3,500 water gallons, or in bulk Class A or B explosives, poison gas (Poison A) liquefied compressed gas or compressed gas, or highway route controlled quantity radioactive materials as defined in § 173.455.	1,000,000	5,000,000
(c) Freight Vehicles of 10,000 Pounds or More GVWR.	Oil listed in § 172.101; hazardous waste, hazardous materials and hazardous substances defined in § 171.8 and listed in § 172.101, but not mentioned in (b) above or (d) below.	500,000	1,000,000
(d) Freight Vehicles Under 10,000 Pounds GVWR.	Any quantity of Class A or B explosives; any quantity of poison gas (Poison A); or highway route controlled quantity radioactive materials as defined in § 173.455.	1,000,000	5,000,000

*NOTE: The effective date of the current required minimum limit in § 387.303(b)(2) was January 6, 1983, in accordance with the requirements of Pub. L. 97–424, 96 Stat. 2097.

(3) Motor carriers subject to the minimum limits governed by this section, which are also subject to Department of Transportation limits requirements, are at no time required to have security for more than the required minimum limits established by the Secretary of Transportation in the applicable provisions of 49 CFR Part 387—Minimum Levels of Financial Responsibility for Motor Carriers.

(4) *Foreign motor carriers and foreign motor private carriers.* Foreign motor carriers and foreign motor private carriers (Mexican), subject to the requirements of 49 U.S.C. 13902(c) and 49 CFR part 368 regarding obtaining certificates of registration from the Commission, must meet our minimum financial responsibility requirements by obtaining insurance coverage, in the required amounts, for periods of 24 hours or longer, from insurance or surety companies, that meet the requirements of 49 CFR 387.315. These carriers must have available for inspection, in each vehicle operating in the United States, copies of the following documents:

(i) The certificate of registration;

(ii) The required insurance endorsement (Form MCS–90); and

(iii) An insurance identification card, binder, or other document issued by an authorized insurer which specifies both the effective date and the expiration date of the insurance coverage.

Notwithstanding the provisions of § 387.301(a)(1), the filing of evidence of insurance is not required as a condition to the issuance of a certificate of registration. Further, the reference to continuous coverage at § 387.313(a)(6) and the reference to cancellation notice at § 387.313(d) are not applicable to these carriers.

(c) *Motor common carriers: Cargo liability.* Security required to compensate shippers or consignees for loss or damage to property belonging to shippers or consignees and coming into the possession of motor carriers in connection with their transportation service, (1) for loss of or damage to property carried on any one motor vehicle—$5,000, (2) for less of or damage to or aggregate of losses or damages of or to property

occurring at any one time and place—$10,000.

[47 FR 55944, Dec. 14, 1982, as amended at 48 FR 43333, Sept. 23, 1983; 48 FR 45775, Oct. 7, 1983; 48 FR 51780, Nov. 14, 1983; 49 FR 1991, Jan. 17, 1984; 49 FR 27767, July 6, 1984; 50 FR 40030, Oct. 1, 1985; 53 FR 36984, Sept. 23, 1988; 54 FR 52034, Dec. 20, 1989; 55 FR 47338, Nov. 13, 1990; 62 FR 49941, Sept. 24, 1997]

§ 387.305 Combination vehicles.

The following combinations will be regarded as one motor vehicle for purposes of this part, (a) a tractor and trailer or semitrailer when the tractor is engaged solely in drawing the trailer or semitrailer, and (b) a truck and trailer when both together bear a single load.

§ 387.307 Property broker surety bond or trust fund.

(a) *Security*. A property broker must have a surety bond or trust fund in effect for $10,000. The Commission will not issue a property broker license until a surety bond or trust fund for the full limits of liability prescribed herein is in effect. The broker license shall remain valid or effective only as long as a surety bond or trust fund remains in effect and shall ensure the financial responsibility of the broker.

(b) *Evidence of Security*. Evidence of a surety bond must be filed using the Commission's prescribed Form BMC 84. Evidence of a trust fund with a financial institution must be filed using the Commission's prescribed Form BMC 85. The surety bond or the trust fund shall ensure the financial responsibility of the broker by providing for payments to shippers or motor carriers if the broker fails to carry out its contracts, agreements, or arrangements for the supplying of transportation by authorized motor carriers.

(c) *Financial Institution*—when used in this section and in forms prescribed under this section, where not otherwise distinctly expressed or manifestly incompatible with the intent thereof, shall mean—Each agent, agency, branch or office within the United States of any person, as defined by the Interstate Commerce Act, doing business in one or more of the capacities listed below:

(1) An insured bank (as defined in section 3(h) of the Federal Deposit Insurance Act (12 U.S.C. 1813(h));

(2) A commercial bank or trust company;

(3) An agency or branch of a foreign bank in the United States;

(4) An insured institution (as defined in section 401(a) of the National Housing Act (12 U.S.C. 1724(a));

(5) A thrift institution (savings bank, building and loan association, credit union, industrial bank or other);

(6) An insurance company;

(7) A loan or finance company; or

(8) A person subject to supervision by any state or federal bank supervisory authority.

(d) *Forms and Procedures*—(1) *Forms for broker surety bonds and trust agreements.* Form BMC–84 broker surety bond will be filed with the Commission for the full security limits under subsection (a); or Form BMC–85 broker trust fund agreement will be filed with the Commission for the full security limits under paragraph (a) of this section.

(2) *Broker surety bonds and trust fund agreements in effect continuously.* Surety bonds and trust fund agreements shall specify that coverage thereunder will remain in effect continuously until terminated as herein provided.

(i) *Cancellation notice.* The surety bond and the trust fund agreement may be cancelled as only upon 30 days' written notice to the Commission, on prescribed Form BMC 36, by the principal or surety for the surety bond, and on prescribed Form BMC 85, by the trustor/broker or trustee for the trust fund agreement. The notice period commences upon the actual receipt of the notice at the Commission's Washington, DC office.

(ii) *Termination by replacement.* Broker surety bonds or trust fund agreements which have been accepted by the Commission under these rules may be replaced by other surety bonds or trust fund agreements, and the liability of the retiring surety or trustee under such surety bond or trust fund agreements shall be considered as having terminated as of the effective date of the replacement surety bond or trust fund agreement. However, such termination shall not affect the liability of

the surety or the trustee hereunder for the payment of any damages arising as the result of contracts, agreements or arrangements made by the broker for the supplying of transportation prior to the date such termination becomes effective.

(3) *Filing and copies.* Broker surety bonds and trust fund agreements must be filed with the Commission in duplicate.

[53 FR 10396, Mar. 31, 1988]

§ 387.309 Qualifications as a self-insurer and other securities or agreements.

(a) *As a self-insurer.* The Commission will consider and will approve, subject to appropriate and reasonable conditions, the application of a motor carrier to qualify as a self-insurer, if the carrier furnishes a true and accurate statement of its financial condition and other evidence that establishes to the satisfaction of the Commission the ability of the motor carrier to satisfy its obligation for bodily injury liability, property damage liability, or cargo liability. Application Guidelines: In addition to filing Form B.M.C. 40, applicants for authority to self-insure against bodily injury and property damage claims should submit evidence that will allow the Commission to determine:

(1) The adequacy of the tangible net worth of the motor carrier in relation to the size of operations and the extent of its request for self-insurance authority. Applicant should demonstrate that it will maintain a net worth that will ensure that it will be able to meet its statutory obligations to the public to indemnify all claimants in the event of loss.

(2) *The existence of a sound self-insurance program.* Applicant should demonstrate that it has established, and will maintain, an insurance program that will protect the public against all claims to the same extent as the minimum security limits applicable to applicant under § 387.303 of this part. Such a program may include, but not be limited to, one or more of the following: Irrevocable letters of credit; irrevocable trust funds; reserves; sinking funds; third-party financial guarantees, parent company or affiliate sureties; excess insurance coverage; or other similar arrangements.

(3) *The existence of an adequate safety program.* Applicant must submit evidence of a current ''satisfactory'' safety rating by the United States Department of Transportation. Non-rated carriers need only certify that they have not been rated. Applications by carriers with a less than satisfactory rating will be summarily denied. Any self-insurance authority granted by the Commission will automatically expire 30 days after a carrier receives a less than satisfactory rating from DOT.

(4) *Additional information.* Applicant must submit such additional information to support its application as the Commission may require.

(b) *Other securities or agreements.* The Commission also will consider applications for approval of other securities or agreements and will approve any such application if satisfied that the security or agreement offered will afford the security for protection of the public contemplated by 49 U.S.C. 13906.

[48 FR 51780, Nov. 14, 1983 and 51 FR 15008, Apr. 22, 1986, as amended at 52 FR 3815, Feb. 6, 1987; 62 FR 49941, Sept. 24, 1997]

§ 387.311 Bonds and certificates of insurance.

(a) *Public liability.* Each Form BMC 82 surety bond filed with the Commission must be for the full limits of liability required under § 387.303(b)(1). Form MCS–82 surety bonds and other forms of similar import prescribed by the Department of Transportation, may be aggregated to comply with the minimum security limits required under § 387.303(b)(1) or § 387.303(b)(2). Each Form BMC 91 certificate of insurance filed with the Commission will always represent the full security minimum limits required for the particular carrier, while it remains in force, under § 387.303(b)(1) or § 387.303(b)(2), whichever is applicable. Any previously executed Form BMC 91 filed before the current revision which is left on file with the Commission after the effective date of this regulation, and not canceled within 30 days of that date will be deemed to certify the same coverage limits as would the filing of a revised Form BMC 91. Each Form BMC 91X certificate of insurance filed with

the Commission will represent the full security limits under § 387.303(b)(1) or § 387.303(b)(2) or the specific security limits of coverage as indicated on the face of the form. If the filing reflects aggregation, the certificate must show clearly whether the insurance is primary or, if excess coverage, the amount of underlying coverage as well as amount of the maximum limits of coverage.* Each Form BMC 91MX certificate of insurance filed with the Commission will represent the security limits of coverage as indicated on the face of the form. The Form BMC 91MX must show clearly whether the insurance is primary or, if excess coverage, the amount of underlying coverage as well as amount of the maximum limits of coverage.

(b) *Cargo Liability*. Each form B.M.C. 83 surety bond filed with the Commission must be for the full limits of liability required under § 387.303(c). Each Form B.M.C. 34 certificate of insurance filed with the Commission will represent the full security limits under § 387.303(c) or the specific security limits of coverage as indicated on the face of the form. If the filing reflects aggregation, the certificate must show clearly whether the insurance is primary or, if excess coverage, the amount of underlying coverage as well as amount of the maximum limits of coverage.

(c) Each policy of insurance in connection with the certificate of insurance which is filed with the Commission, shall be amended by attachment of the appropriate endorsement prescribed by the Commission or the Department of Transportation and the certificate of insurance filed must accurately reflect that endorsement.

[47 FR 55944, Dec. 14, 1982, as amended at 48 FR 43332, Sept. 23, 1983; 48 FR 51781, Nov. 14, 1983; 50 FR 40030, Oct. 1, 1985; 62 FR 49941, Sept. 24, 1997]

§ 387.313 Forms and procedures.

(a) *Forms for endorsements, certificates of insurance and others.* (1) *In form prescribed.* Endorsements for policies of insurance and surety bonds, certificates of insurance, applications to qualify as a self-insurer, or for approval of other securities or agreements, and notices of cancellation must be in the form prescribed and approved by the Commission.

(2) *Aggregation of Insurance.*** When insurance is provided by more than one insurer in order to aggregate security limits for carriers operating only freight vehicles under 10,000 pounds Gross Vehicle Weight Rating, as defined in § 387.303(b)(1), a separate *Form BMC 90*, with the specific amounts of underlying and limits of coverage shown thereon or appended thereto, and *Form BMC 91X* certificate is required of each insurer.

For aggregation of insurance for all other carriers to cover security limits under § 387.303 (b)(1) or (b)(2), a separate Department of Transportation prescribed form endorsement and *Form BMC 91X* certificate is required of each insurer. When insurance is provided by more than one insurer to aggregate coverage for security limits under § 387.303(c) a separate Form BMC 32 endorsement and Form BMC 34 certificate of insurance is required for each insurer.

For aggregation of insurance for foreign motor private carriers of nonhazardous commodities to cover security limits under § 387.303(b)(4), a separate Form BMC 90 with the specific amounts of underlying and limits of coverage shown thereon or appended thereto, or Department of Transportation prescribed form endorsement, and Form BMC 91MX certificate is required for each insurer.

(3) *Use of Certificates and Endorsements in BMC Series. Form BMC 91* certificates of insurance will be filed with the Commission for the full security limits under § 387.303 (b)(1) or (b)(2).

*NOTE: Aggregation to meet the requirement of § 387.303(b)(1) will not be allowed until the completion of our rulemaking in Ex Parte No. MC–5 (Sub-No. 2), *Motor Carrier and Freight Forwarder Insurance Procedures and Minimum Amounts of Liability*.

**NOTE: See NOTE for Rule 387.311. Also, it should be noted that DOT is considering prescribing adaptations of the Form MCS 90 endorsement and the Form MCS 82 surety bond for use by passenger carriers and Rules §§ 387.311 and 387.313 have been written sufficiently broad to provide for this contingency when new forms are prescribed by that Agency.

Form BMC 91X certificate of insurance will be filed to represent full coverage or any level of aggregation for the security limits under § 387.303 (b)(1) or (b)(2).

Form BMC 90 endorsement will be used with each filing of *Form BMC 91* or *Form 91X* certificate with the Commission which certifies to coverage not governed by the requirements of the Department of Transportation. *Form BMC 32* endorsement and *Form BMC 34* certificate of insurance and *Form BMC 83* surety bonds are used for the limits of cargo liability under § 1043.2(c).

Form BMC 91MX certificate of insurance will be filed to represent any level of aggregation for the security limits under § 387.303(b)(4).

(4) *Use of Endorsements in MCS Series.* When Security limits certified under § 387.303 (b)(1) or (b)(2) involves coverage also required by the Department of Transportation a *Form MCS endorsement* prescribed by the Department of Transportation such as, and including, the *Form MCS 90* endorsement is required.

(5) *Surety bonds.* When surety bonds are used rather than certificates of insurance, *Form BMC 82* is required for the security limits under § 1043.2(b)(1) not subject to regulation by the Department of Transportation, and *Form MCS 82,* or any form of similar import prescribed by the Department of Transportation, is used for the security limits subject also to minimum coverage requirements of the Department of Transportation.

(6) *Surety bonds and certificates in effect continuously.* Surety bonds and certificates of insurance shall specify that coverage thereunder will remain in effect continuously until terminated as herein provided, except: (1) When filed expressly to fill prior gaps or lapses in coverage or to cover grants of emergency temporary authority of unusually short duration and the filing clearly so indicates, or (2) in special or unusual circumstances, when special permission is obtained for filing certificates of insurance or surety bonds on terms meeting other particular needs of the situation.

(b) *Filing and copies.* Certificates of insurance, surety bonds, and notices of cancellation must be filed with the Commission in triplicate.

(c) *Name of insured.* Certificates of insurance and surety bonds shall be issued in the full and correct name of the individual, partnership, corporation or other person to whom the certificate, permit, or license is, or is to be, issued. In the case of a partnership, all partners shall be named.

(d) *Cancellation notice.* Except as provided in paragraph (e) of this section, surety bonds, certificates of insurance and other securities or agreements shall not be cancelled or withdrawn until 30 days after written notice has been submitted to the Commission at its offices in Washington, DC, on the prescribed form (Form BMC–35, Notice of Cancellation Motor Carrier Policies of Insurance under 49 U.S.C. 13906, and BMC–36, Notice of Cancellation Motor Carrier and Broker Surety Bonds, as appropriate) by the insurance company, surety or sureties, motor carrier, broker or other party thereto, as the case may be, which period of thirty (30) days shall commence to run from the date such notice on the prescribed form is actually received by the Commission.

(e) *Termination by replacement.* Certificates of insurance or surety bonds which have been accepted by the Commission under these rules may be replaced by other certificates of insurance, surety bonds or other security, and the liability of the retiring insurer or surety under such certificates of insurance or surety bonds shall be considered as having terminated as of the effective date of the replacement certificate of insurance, surety bond or other security, provided the said replacement certificate, bond or other security is acceptable to the Commission under the rules and regulations in this part.

CROSS REFERENCE: For list of forms prescribed, see § 1003.1(b) of this chapter.

[47 FR 55944, Dec. 14, 1982, as amended at 48 FR 43334, Sept. 23, 1983; 48 FR 51781, Nov. 14, 1983; 50 FR 40030, Oct. 1, 1985; 51 FR 34623, Sept. 30, 1986; 62 FR 49941, Sept. 24, 1997]

§ 387.315 Insurance and surety companies.

A certificate of insurance or surety bond will not be accepted by the Commission unless issued by an insurance or surety company that is authorized (licensed or admitted) to issue bonds or underlying insurance policies:

(a) In each state in which the motor carrier is authorized by the Commission to operate, or

(b) In the state in which the motor carrier has its principal place of business or domicile, and will designate in writing upon request by the Commission, a person upon whom process, issued by or under the authority of a court of competent jurisdiction, may be served in any proceeding at law or equity brought in any state in which the carrier operates, or

(c) In any state, and is eligible as an excess or surplus lines insurer in any state in which business is written, and will make the designation of process agent described in paragraph (b) of this section.

[56 FR 28111, June 19, 1991]

§ 387.317 Refusal to accept, or revocation by the FHWA of surety bonds, etc.

The Commission may, at any time, refuse to accept or may revoke its acceptance of any surety bond, certificate of insurance, qualifications as a self-insurer, or other securities or agreements if, in its judgment such security does not comply with these sections or for any reason fails to provide satisfactory or adequate protection for the public. Revocation of acceptance of any certificate of insurance, surety bond or other security shall not relieve the motor carrier from compliance with § 387.301(d).

[47 FR 55945, Dec. 14, 1982, as amended at 62 FR 49942, Sept. 24, 1997]

§ 387.319 Fiduciaries.

(a) *Definitions.* The terms ''insured'' and ''principal'' as used in a certificate of insurance, surety bond, and notice of cancellation, filed by or for a motor carrier, include the motor carrier and its fiduciary as of the moment of succession. The term ''fiduciary'' means any person authorized by law to collect and preserve property of incapacitated, financially disabled, bankrupt, or deceased holders of operating rights, and assignees of such holders.

(b) *Insurance coverage in behalf of fiduciaries to apply concurrently.* The coverage furnished under the provisions of this section on behalf of fiduciaries shall not apply subsequent to the effective date of other insurance, or other security, filed with and approved by the Commission in behalf of such fiduciaries. After the coverage provided in this section shall have been in effect thirty (30) days, it may be cancelled or withdrawn within the succeeding period of thirty (30) days by the insurer, the insured, the surety, or the principal upon ten (10) days' notice in writing to the Commission at its office in Washington, DC, which period of ten (10) days shall commence to run from the date such notice is actually received by the Commission. After such coverage has been in effect for a total of sixty (60) days, it may be cancelled or withdrawn only in accordance with § 1043.7.

[32 FR 20032, Dec. 20, 1967, as amended at 47 FR 49596, Nov. 1, 1982; 47 FR 55945, Dec. 14, 1982; 55 FR 11197, Mar. 27, 1990]

§ 387.321 Operations in foreign commerce.

No motor carrier may operate in the United States in the course of transportation between places in a foreign country or between a place in one foreign country and a place in another foreign country unless and until there shall have been filed with and accepted by the Commission a certificate of insurance, surety bond, proof of qualifications as a self-insurer, or other securities or agreements in the amount prescribed in § 387.303(b), conditioned to pay any final judgment recovered against such motor carrier for bodily injuries to or the death of any person resulting from the negligent operation, maintenance, or use of motor vehicles in transportation between places in a foreign country or between a place in one foreign country and a place in another foreign country, insofar as such transportation takes place in the United States, or for loss of or damage to property of others. The security for the protection of the public required by

this section shall be maintained in effect at all times and shall be subject to the provisions of §§387.309 through 387.319. The requirements of §387.315(a) shall be satisfied if the insurance or surety company, in addition to having been approved by this Commission, is legally authorized to issue policies or surety bonds in at least one of the States in the United States, or one of the Provinces in Canada, and has filed with this Commission the name and address of a person upon whom legal process may be served in each State in or through which the motor carrier operates. Such designation may from time to time be changed by like designation similarly filed, but shall be maintained during the effectiveness of any certificate of insurance or surety bond issued by the company, and thereafter with respect to any claims arising during the effectiveness of such certificate or bond. The term ''motor carrier'' as used in this section shall not include private carriers or carriers operating under the partial exemption from regulation in 49 U.S.C. 13503 and 13506.

[47 FR 55945, Dec. 14, 1982, as amended at 62 FR 49942, Sept. 24, 1997]

§ 387.323 Electronic filing of surety bonds, trust fund agreements, certificates of insurance and cancellations.

(a) Insurers may, at their option and in accordance with the requirements and procedures set forth in paragraphs (a) through (d) of this section, file forms BMC 34, BMC 35, BMC 36, BMC 82, BMC 83, BMC 84, BMC 85, BMC 91, and BMC 91X electronically, in lieu of using the prescribed printed forms.

(b) Each insurer must obtain authorization to file electronically by registering with the Commission. An individual account number and password for computer access will be issued to each registered insurer.

(c) All files to be transmitted must be in an ASCII fixed format, i.e., all records must have the same number of fields and same length. The record layouts for electronic filing transactions are as described in the following table:

ELECTRONIC INSURANCE FILING TRANSACTIONS

Field name	Number of positions	Description	Required F=filing C=cancel B=both	Start field	End field
Record type	1 Numeric	1=Filing 2=Cancellation	B	1	1
Insurer number	8 Text	ICC Assigned Insurer Number (Home Office) With Suffix (Issuing Office), If Different, e.g. 12345–01.	B	2	9
Filing type	1 Numeric	1 = BI&PD 2 = Cargo 3 = Bond 4 = Trust Fund	B	10	10
ICC docket number	8 Text	ICC Assigned MC or FF Number, e.g., MC000045.	B	11	18
Insured legal name	120 Text	Legal Name	B	19	138
Insured d/b/a name	60 Text	Doing Business As Name If Different From Legal Name.	B	139	198
Insured address	35 Text	Either street or mailing address	B	199	233
Insured city	30 Text		B	234	263
Insured state	2 Text		B	264	265
Insured zip code	9 Numeric	(Do not include dash if using 9 digit code).	B	266	274
Insured country	2 Text	(Will default to US)	B	275	276
Form code	10 Text	BMC–91, BMC–91X, BMC–34, BMC–35, etc.	B	277	286
Full, primary or excess coverage.	1 Text	If BMC–91X, P or E = indicator of primary or excess policy; 1 = Full under §387.303(b)(1); 2 = Full under §387.303(b)(2).	F	287	287
Limit of liability	5 Numeric	$ in Thousands	F	288	292
Underlying limit of liability.	5 Numeric	$ in Thousands (will default to $000 if Primary).	F	293	297

ELECTRONIC INSURANCE FILING TRANSACTIONS—Continued

Field name	Number of positions	Description	Required F=filing C=cancel B=both	Start field	End field
Effective date	8 Text	MM/DD/YY Format for both Filing or Cancellation.	B	298	305
Policy number	25 Text	Surety companies may enter bond number.	B	306	330

(d) All registered insurers agree to furnish upon request to the Commission a duplicate original of any policy (or policies) and all endorsements, surety bond, trust fund agreement, or other filing.

[60 FR 16810, Apr. 3, 1995, as amended at 62 FR 49942, Sept. 24, 1997]

Subpart D—Surety Bonds and Policies of Insurance for Freight Forwarders

AUTHORITY: 49 U.S.C. 10102, 10321, and 10927; 5 U.S.C. 553.

SOURCE: 55 FR 11201, Mar. 27, 1990, unless otherwise noted. Redesignated at 61 FR 54710, Oct. 21, 1996.

§ 387.401 Definitions.

(a) *Freight forwarder* means a person holding itself out to the general public (other than as an express, pipeline, rail, sleeping car, motor, or water carrier) to provide transportation of property for compensation in interstate commerce, and in the ordinary course of its business:

(1) Performs or provides for assembling, consolidating, break-bulk, and distribution of shipments; and

(2) Assumes responsibility for transportation from place of receipt to destination; and

(3) Uses for any part of the transportation a carrier subject to Commission jurisdiction.

(b) *Household goods freight forwarder* (HHGFF) means a freight forwarder of household goods, unaccompanied baggage, or used automobiles.

(c) *Motor vehicle* means any vehicle, machine, tractor, trailer, or semitrailer propelled or drawn by mechanical power and used to transport property, but does not include any vehicle, locomotive, or car operated exclusively on a rail or rails. The following combinations will be regarded as one motor vehicle:

(1) A tractor that draws a trailer or semitrailer; and

(2) A truck and trailer bearing a single load.

§ 387.403 General requirements.

(a) *Cargo.* A freight forwarder (including a HHGFF) may not operate until it has filed with the Commission an approriate surety bond, certificate of insurance, qualifications as a self-insurer, or other securities or agreements, in the amounts prescribed at § 387.405, for loss of or damage to property.

(b) *Public liability.* A HHGFF may not perform transfer, collection, and delivery service until it has filed with the Commission an appropriate surety bond, certificate of insurance, qualifications as a self-insurer, or other securities or agreements, in the amounts prescribed at § 387.405, conditioned to pay any final judgment recovered against such HHGFF for bodily injury to or the death of any person, or loss of or damage to property (except cargo) of others, or, in the case of freight vehicles described at 49 CFR 387.303(b)(2), for environmental restoration, resulting from the negligent operation, maintenance, or use of motor vehicles operated by or under its control in performing such service.

[55 FR 11201, Mar. 27, 1990. Redesignated at 61 FR 54710, Oct. 21, 1996, as amended at 62 FR 49942, Sept. 24, 1997]

§ 387.405 Limits of liability.

The minimum amounts for cargo and public liability security are identical to those prescribed for motor carriers at 49 CFR 387.303.

[55 FR 11201, Mar. 27, 1990. Redesignated at 61 FR 54710, Oct. 21, 1996, as amended at 62 FR 49942, Sept. 24, 1997]

§ 387.407 Surety bonds and certificates of insurance.

(a) The limits of liability under § 387.405 may be provided by aggregation under the procedures at 49 CFR part 387, subpart C.

(b) Each policy of insurance used in connection with a certificate of insurance filed with the Commission shall be amended by attachment of the appropriate endorsement prescribed by the Commission (or the Department of Transportation, where applicable).

[55 FR 11201, Mar. 27, 1990. Redesignated at 61 FR 54710, Oct. 21, 1996, as amended at 62 FR 49942, Sept. 24, 1997]

§ 387.409 Insurance and surety companies.

A certificate of insurance or surety bond will not be accepted by the Commission unless issued by an insurance or surety company that is authorized (licensed or admitted) to issue bonds or underlying insurance policies:

(a) In each state in which the freight forwarder is authorized by the Commission to perform service, or

(b) In the state in which the freight forwarder has its principal place of business or domicile, and will designate in writing upon request by the Commission, a person upon whom process, issued by or under the authority of a court of competent jurisdiction, may be served in any proceeding at law or equity brought in any state in which the freight forwarder performs service; or

(c) In any state, and is eligible as an excess or surplus lines insurer in any state in which business is written, and will make the designation of process agent prescribed in paragraph (b) of this section.

[56 FR 28111, June 19, 1991]

§ 387.411 Qualifications as a self-insurer and other securities or agreements.

(a) *Self-insurer.* The Commission will approve the application of a freight fowarder to qualify as a self-insurer if it is able to meet its obligations for bodily-injury, property-damage, and cargo liability without adversely affecting its business.

(b) *Other securities and agreements.* The Commission will grant applications for approval of other securities and agreements if the public will be protected as contemplated by 49 U.S.C. 13906(c).

[55 FR 11201, Mar. 27, 1990. Redesignated at 61 FR 54710, Oct. 21, 1996, as amended at 62 FR 49942, Sept. 24, 1997]

§ 387.413 Forms and procedure.

(a) *Forms.* Endorsements for policies of insurance, surety bonds, certificates of insurance, applications to qualify as a self-insurer or for approval of other securities or agreements, and notices of cancellation must be in the form prescribed at 49 CFR part 387, subpart C.

(b) *Procedure.* Certificates of insurance, surety bonds, and notices of cancellation must be filed with the Commission in triplicate.

(c) *Names.* Certificates of insurance and surety bonds shall be issued in the full name (including any trade name) of the individual, partnership (all partners named), corporation, or other person holding or to be issued the permit.

(d) *Cancellation.* Except as provided in paragraph (e) of this section, certificates of insurance, surety bonds, and other securities and agreements shall not be cancelled or withdrawn until 30 days after the Commission receives written notice from the insurance company, surety, freight forwarder, or other party, as the case may be.

(e) *Termination by replacement.* Certificates of insurance or surety bonds may be replaced by other certificates of insurance, surety bonds, or other security, and the liability of the retiring insurer or surety shall be considered as having terminated as of the replacement's effective date, if acceptable to the Commission.

[55 FR 11201, Mar. 27, 1990. Redesignated at 61 FR 54710, Oct. 21, 1996, as amended at 62 FR 49942, Sept. 24, 1997]

§ 387.415 Acceptance and revocation by the FHWA.

The Commission may at any time refuse to accept or may revoke its acceptance of any surety bond, certificate of insurance, qualifications as a self-insurer, or other security or agreement that does not comply with these

rules or fails to provide adequate public protection.

§387.417 Fiduciaries.

(a) *Interpretations.* The terms ''insured'' and ''principal'' as used in a certificate of insurance, surety bond, and notice of cancellation, filed by or for a freight forwarder, include the freight forwarder and its fiduciary (as defined at 49 CFR 387.319(a)) as of the moment of succession.

(b) *Span of security coverage.* The coverage furnished for a fiduciary shall not apply after the effective date of other insurance or security, filed with and accepted by the Commission for such fiduciary. After the coverage shall have been in effect 30 days, it may be cancelled or withdrawn within the succeeding 30 days by the insurer, the insured, the surety, or the principal 10 days after the Commission receives written notice. After such coverage has been in effect 60 days, it may be cancelled or withdrawn only in accordance with §387.413(d).

[55 FR 11201, Mar. 27, 1990. Redesignated at 61 FR 54710, Oct. 21, 1996, as amended at 62 FR 49942, Sept. 24, 1997]

§387.419 Electronic filing of surety bonds, certificates of insurance and cancellations.

Insurers may, at their option and in accordance with the requirements and procedures set forth at 49 CFR 387.323, file certificates of insurance, surety bonds, and other securities and agreements electronically.

[60 FR 16811, Apr. 3, 1995, as amended at 62 FR 49942, Sept. 24, 1997]

PART 388—COOPERATIVE AGREEMENTS WITH STATES

Sec.

388.1 Eligibility.
388.2 Extent of acceptance.
388.3 Cancellation.
388.4 Exchange of information.
388.5 Requests for assistance.
388.6 Joint investigation, inspection, or examination.
388.7 Joint administrative activities related to enforcement of safety and hazardous materials laws and regulations.
388.8 Supplemental agreements.

AUTHORITY: 49 U.S.C. 104 and 502; 49 CFR 1.48.

SOURCE: 33 FR 19725, Dec. 25, 1968, unless otherwise noted.

§388.1 Eligibility.

Any State may agree with the Federal Highway Administration to enforce the safety laws and regulations of said State and the United States concerning motor carrier transportation by filing with the Administrator at Washington, DC 20591, a written acceptance of the terms herein.

§388.2 Extent of acceptance.

The written acceptance may be in letter form, signed by competent authority of said State charged with regulations of motor carrier saftey and hazardous materials transportation and shall specify the terms herein pertaining to the obligations of a State in which said State will participate. To the extent that a State agrees to participate in the terms herein, officials of the Federal Highway Administration will reciprocate.

§388.3 Cancellation.

Cancellation or withdrawal, in whole or in part, from any agreement made under this chapter may be effected by written notice from either party indicating the effective date of said cancellation or withdrawal.

§388.4 Exchange of information.

(a) *Federal Highway Administration furnishing information to State.* Information that comes to the attention of an employee of the Federal Highway Administration in the course of his/her official duties of investigation, inspection, or examination of the property, equipment, and records of a motor carrier or others, pursuant to 49 U.S.C. 504(c), and that is believed to be a violation of any law or regulation of the State pertaining to unsafe motor carrier operations and practices, shall be communicated to the appropriate State authority by an official of the Federal Highway Administration.

(b) *State furnishing information to Federal Highway Administration.* Information that comes to the attention of a duly authorized agent of the State in the course of his/her official duties of

investigation, inspection, or examination of the property, equipment, and records of a motor carrier or others, and that is believed to be a violation of any provision of the safety or hazardous materials laws of the United States concerning highway transportation or the regulations of the Federal Highway Administration thereunder, shall be communicated to the Regional Director of Motor Carriers.

[51 FR 12621, Apr. 14, 1986]

§ 388.5 Requests for assistance.

(a) *State request for Federal Highway Administration assistance.* Upon written request of the appropriate State authority, the Office of Motor Carriers officials of the Federal Highway Administration for that State shall, as time, personnel, and funds permit, obtain evidence for use by said State in the enforcement of its laws and regulations concerning unsafe motor carrier operations. Evidence obtained in this manner shall be transmitted to the appropriate State authority together with the name and address of an agent or employee, if any, having knowledge of the facts, who shall be made available when necessary to testify as a witness in an enforcement proceeding or other action.

(b) *Federal Highway Administration request for State assistance.* Upon written request from a Regional Director of Motor Carriers, the appropriate State authority, shall, as time, personnel, and funds permit, obtain evidence in the State for use by the Federal Highway Administration in its enforcement of the safety and hazardous materials laws and regulations of the United States concerning highway transportation. Evidence obtained in this manner shall be transmitted to the Regional Director of Motor Carriers, together with the name and address of an agent or employee, if any, having knowledge of the facts, who shall be made available when necessary to testify as a witness in an enforcement proceeding or other action.

[33 FR 19725, Dec. 25, 1968, as amended at 51 FR 12621, Apr. 14, 1986; 60 FR 38743, July 28, 1995]

§ 388.6 Joint investigation, inspection, or examination.

Upon agreement by the Regional Director of Motor Carriers and the appropriate State authority, there will be conducted a joint investigation, inspection, or examination of the property, equipment, or records of motor carriers or others, for the enforcement of the safety and hazardous materials laws and regulations of the United States and the State concerning highway transportation. The said Regional Director of Motor Carriers and the appropriate State authority shall decide as to the location and time, the objectives sought, and the identity of the person who will supervise the joint effort and make the necessary decisions. Any agent or employee of either agency who has personal knowledge of pertinent facts shall be made available when necessary to testify as a witness in an enforcement proceeding or other action.

[33 FR 19725, Dec. 25, 1968, as amended at 51 FR 12621, Apr. 14, 1986]

§ 388.7 Joint administrative activities related to enforcement of safety and hazardous materials laws and regulations.

To facilitate the interchange of information and evidence, and the conduct of joint investigation and administrative action, the Regional Director of Motor Carriers and the appropriate State authority shall, when warranted, schedule joint conferences of staff members of both agencies. Information shall be exchanged as to the nature and extent of the authority and capabilities of the respective agencies to enforce the safety and hazardous materials laws and regulations of the State or of the United States concerning motor carrier transportation. The Federal Highway Administration and the State (or appropriate State authority) shall use their best efforts to inform each other of changes in their rules and regulations and cooperate with and assist each other in conducting training schools for Federal and State enforcement officials engaged in such duties.

[33 FR 19725, Dec. 25, 1968, as amended at 51 FR 12621, Apr. 14, 1986]

§ 388.8 Supplemental agreements.

The terms specified in this part may be supplemented from time to time by specific agreement between the Federal Highway Administration and the appropriate State authority in order to further implement the provisions of 49 U.S.C. 502.

[51 FR 12621, Apr. 14, 1986]

PART 389—RULEMAKING PROCEDURES—FEDERAL MOTOR CARRIER SAFETY REGULATIONS

Subpart A—General

Sec.
389.1 Applicability.
389.3 Definitions.
389.5 Regulatory docket.
389.7 Records.

Subpart B—Procedures for Adoption of Rules

389.11 General.
389.13 Initiation of rule making.
389.15 Contents of notices of proposed rule making.
389.17 Participation by interested persons.
389.19 Petitions for extension of time to comment.
389.21 Contents of written comments.
389.23 Consideration of comments received.
389.25 Additional rule making proceedings.
389.27 Hearings.
389.29 Adoption of final rules.
389.31 Petitions for rule making.
389.33 Processing of petition.
389.35 Petitions for reconsideration.
389.37 Proceedings on petitions for reconsideration.

AUTHORITY: 49 U.S.C. 104, 501 *et seq.*, 31101 *et seq.*, 31138, 31139, 31301 *et seq.*, and 31502; 42 U.S.C. 4917; and 49 CFR 1.48.

SOURCE: 35 FR 9209, June 12, 1970, unless otherwise noted.

Subpart A—General

§ 389.1 Applicability.

This part prescribes rulemaking procedures that apply to the issuance, amendment and revocation of rules under an Act.

[62 FR 37152, July 11, 1997]

§ 389.3 Definitions.

Act means statutes granting the Secretary authority to regulate motor carrier safety.

Administrator means the Federal Highway Administrator.

[62 FR 37152, July 11, 1997]

§ 389.5 Regulatory docket.

(a) Information and data deemed relevant by the Administrator relating to rule making actions, including notices of proposed rule making; comments received in response to notices; petitions for rule making and reconsideration; denials of petitions for rule making and reconsideration; records of additional rule making proceedings under § 389.25; and final rules are maintained at Headquarters, Federal Highway Administration, Nassif Building, 400 Seventh Street, SW., Washington, DC 20590.

(b) Any person may examine docketed material, at any time during regular business hours after the docket is established, except material ordered withheld from the public under section 552(b) of title 5 of the United States Code, and may obtain a copy of it upon payment of a fee.

[35 FR 9209, June 12, 1970, as amended at 53 FR 2036, Jan. 26, 1988]

§ 389.7 Records.

Records of the Administrator relating to rule making proceedings are available for inspection as provided in section 552(b) of title 5 of the United States Code and part 7 of the regulations of the Secretary of Transportation (part 7 of this title; 32 FR 9284 *et seq.*).

[35 FR 9209, June 12, 1970, as amended at 53 FR 2036, Jan. 26, 1988]

Subpart B—Procedures for Adoption of Rules

§ 389.11 General.

Unless the Administrator, for good cause, finds a notice is impractical, unnecessary, or contrary to the public interest, and incorporates such a finding and a brief statement of the reasons for it in the rule, a notice of proposed rulemaking must be issued, and interested

persons are invited to participate in the rulemaking proceedings involving rules under an Act.

[62 FR 37152, July 11, 1997]

§ 389.13 Initiation of rule making.

The Administrator initiates rule making on his/her own motion. However, in so doing, he/she may, in his/her discretion, consider the recommendations of his/her staff or other agencies of the United States or of other interested persons.

[35 FR 9209, June 12, 1970, as amended at 53 FR 2036, Jan. 26, 1988]

§ 389.15 Contents of notices of proposed rule making.

(a) Each notice of proposed rule making is published in the FEDERAL REGISTER, unless all persons subject to it are named and are personally served with a copy of it.

(b) Each notice, whether published in the FEDERAL REGISTER or personally served, includes:

(1) A statement of the time, place, and nature of the proposed rule making proceeding;

(2) A reference to the authority under which it is issued;

(3) A description of the subjects and issues involved or the substance and terms of the proposed rule;

(4) A statement of the time within which written comments must be submitted; and

(5) A statement of how and to what extent interested persons may participate in the proceeding.

§ 389.17 Participation by interested persons.

(a) Any interested person may participate in rule making proceedings by submitting comments in writing containing information, views, or arguments.

(b) In his/her discretion, the Administrator may invite any interested person to participate in the rule making procedures described in § 389.25.

[35 FR 9209, June 12, 1970, as amended at 53 FR 2036, Jan. 26, 1988]

§ 389.19 Petitions for extension of time to comment.

A petition for extension of the time to submit comments must be received in duplicate not later than three (3) days before expiration of the time stated in the notice. The filing of the petition does not automatically extend the time for petitioner's comments. Such a petition is granted only if the petitioner shows good cause for the extension, and if the extension is consistent with the public interest. If an extension is granted, it is granted to all persons, and it is published in the FEDERAL REGISTER.

§ 389.21 Contents of written comments.

All written comments must be in English and submitted in five (5) legible copies, unless the number of copies is specified in the notice. Any interested person must submit as part of his/her written comments all material that he/she considers relevant to any statement of fact made by him/her. Incorporation of material by reference is to be avoided. However, if such incorporation is necessary, the incorporated material shall be identified with respect to document and page.

§ 389.23 Consideration of comments received.

All timely comments are considered before final action is taken on a rule making proposal. Late filed comments may be considered as far as practicable.

§ 389.25 Additional rule making proceedings.

The Administrator may initiate any further rule making proceedings that he/she finds necessary or desirable. or example, interested persons may be invited to make oral arguments, to participate in conferences between the Administrator or his/her representative at which minutes of the conference are kept, to appear at informal hearings presided over by officials designated by the Administrator at which a transcript or minutes are kept, or participate in any other proceeding to assure

informed administrative action and to protect the public interest.

[35 FR 9209, June 12, 1970, as amended at 53 FR 2036, Jan. 26, 1988]

§ 389.27 Hearings.

(a) Sections 556 and 557 of title 5, United States Code, do not apply to hearings held under this part. Unless otherwise specified, hearings held under this part are informal, non-adversary, fact-finding procedures at which there are no formal pleadings or adverse parties. Any rule issued in a case in which an informal hearing is held is not necessarily based exclusively on the record of the hearing.

(b) The Administrator designates a representative to conduct any hearing held under this part. The Chief Counsel of the Federal Highway Administration designates a member of his/her staff to serve as legal officer at the hearing.

[35 FR 9209, June 12, 1970, as amended at 53 FR 2036, Jan. 26, 1988]

§ 389.29 Adoption of final rules.

Final rules are prepared by representatives of the office concerned and the Office of the Chief Counsel. The rule is then submitted to the Administrator for his/her consideration. If the Administrator adopts the rule, it is published in the FEDERAL REGISTER, unless all persons subject to it are named and are personally served with a copy of it.

[35 FR 9209, June 12, 1970, as amended at 53 FR 2036, Jan. 26, 1988]

§ 389.31 Petitions for rule making.

(a) Any interested person may petition the Administrator to establish, amend, or repeal a rule.

(b) Each petition filed under this section must:

(1) Be submitted in duplicate to the Administrator, Federal Highway Administration, 400 Seventh Street, SW., Washington, DC 20590;

(2) Set forth the text or substance of the rule or amendment proposed, or specify the rule that the petitioner seeks to have repealed, as the case may be;

(3) Explain the interest of the petitioner in the action requested;

(4) Contain any information and arguments available to the petitioner to support the action sought.

[35 FR 9209, June 12, 1970, as amended at 45 FR 46424, July 10, 1980; 53 FR 2036, Jan. 26, 1988]

§ 389.33 Processing of petition.

(a) Unless the Administrator otherwise specifies, no public hearing, argument, or other proceeding is held directly on a petition before its disposition under this section.

(b) *Grants.* If the Administrator determines that the petition contains adequate justification, he/she initiates rule making action under this Subpart B.

(c) *Denials.* If the Administrator determines that the petition does not justify rule making, he/she denies the petition.

(d) *Notification.* Whenever the Administrator determines that a petition should be granted or denied, the Office of the Chief Counsel prepares a notice of that grant or denial for issuance to the petitioner, and the Administrator issues it to the petitioner.

[35 FR 9209, June 12, 1970, as amended at 53 FR 2036, Jan. 26, 1988]

§ 389.35 Petitions for reconsideration.

(a) Any interested person may petition the Administrator for reconsideration of any rule issued under this part. The petition must be in English and submitted in five (5) legible copies to the Administrator, Federal Highway Administration, 400 Seventh Street, SW., Washington, DC 20590, and received not later than thirty (30) days after publication of the rule in the FEDERAL REGISTER. Petitions filed after that time will be considered as petitions filed under § 389.31. The petition must contain a brief statement of the complaint and an explanation as to why compliance with the rule is not practicable, is unreasonable, or is not in the public interest.

(b) If the petitioner requests the consideration of additional facts, he/she must state the reason they were not presented to the Administrator within the prescribed time.

(c) The Administrator does not consider repetitious petitions.

(d) Unless the Administrator otherwise provides, the filing of a petition under this section does not stay the effectiveness of the rule.

[35 FR 9209, June 12, 1970, as amended at 53 FR 2036, Jan. 26, 1988]

§ 389.37 Proceedings on petitions for reconsideration.

The Administrator may grant or deny, in whole or in part, any petition for reconsideration without further proceedings. In the event he/she determines to reconsider any rule, he/she may issue a final decision on reconsideration without further proceedings, or he/she may provide such opportunity to submit comment or information and data as he/she deems appropriate. Whenever the Administrator determines that a petition should be granted or denied, he/she prepares a notice of the grant or denial of a petition for reconsideration, for issuance to the petitioner, and issues it to the petitioner. The Administrator may consolidate petitions relating to the same rule.

[35 FR 9209, June 12, 1970, as amended at 53 FR 2036, Jan. 26, 1988]

PART 390—FEDERAL MOTOR CARRIER SAFETY REGULATIONS; GENERAL

Subpart A—General Applicability and Definitions

Sec.
390.1 Purpose.
390.3 General applicability.
390.5 Definitions.
390.7 Rules of construction.

Subpart B—General Requirements and Information

390.9 State and local laws, effect on.
390.11 Motor carrier to require observance of driver regulations.
390.13 Aiding or abetting violations.
390.15 Assistance in investigations and special studies.
390.16–390.17 [Reserved]
390.19 Additional equipment and accessories.
390.21 Marking of commercial motor vehicles.
390.23 Relief from regulations.
390.25 Extension of relief from regulations—emergencies.
390.27 Locations of regional offices of motor carriers.
390.29 [Reserved]
390.31 Copies of records or documents.
390.33 Commercial motor vehicles used for purposes other than defined.
390.35 Certificates, reports, and records: Falsification, reproduction, or alteration.
390.37 Violation and penalty.

Subpart C [Reserved]

Subpart D—Identification of Vehicles

390.401 Applicability.
390.403 Method of identification.
390.405 Size, shape, and color.
390.407 Driveaway service.

AUTHORITY: 49 U.S.C. 13301, 13902, 31132, 31133, 31136, 31502, 31504, and Sec. 204, Pub.L. 104–88, 109 Stat. 803, 941; 49 U.S.C. 701 note, and 49 CFR 1.48.

SOURCE: 53 FR 18052, May 19, 1988, unless otherwise noted.

Subpart A—General Applicability and Definitions

§ 390.1 Purpose.

This part establishes general applicability, definitions, general requirements and information as they pertain to persons subject to this chapter.

§ 390.3 General applicability.

(a) The rules in subchapter B of this chapter are applicable to all employers, employees, and commercial motor vehicles, which transport property or passengers in interstate commerce.

(b) The rules in Part 383, Commercial Driver's License Standards; Requirements and Penalties, are applicable to every person who operates a commercial motor vehicle, as defined in § 383.5 of this subchapter, in interstate or intrastate commerce and to all employers of such persons.

(c) The rules in Part 387, Minimum Levels of Financial Responsibility for Motor Carriers, are applicable to motor carriers as provided in § 387.3 or 387.27 of this subchapter.

(d) *Additional requirements.* Nothing in subchapter B of this chapter shall be construed to prohibit an employer from requring and enforcing more stringent requirements relating to safety of operation and employee safety and health.

(e)Knowledge of and compliance with the regulations.

(1) Every employer shall be knowledgeable of and comply with all regulations contained in this subchapter which are applicable to that motor carrier's operations.

(2) Every driver and employee shall be instructed regarding, and shall comply with, all applicable regulations contained in this subchapter.

(3) All motor vehicle equipment and accessories required by this subchapter shall be maintained in compliance with all applicable performance and design criteria set forth in this subchapter.

(f) *Exceptions.* Unless otherwise specifically provided, the rules in this subchapter do not apply to—

(1) All school bus operations as defined in §390.5;

(2) Transportation performed by the Federal government, a State, or any political subdivision of a State, or an agency established under a compact between States that has been approved by the Congress of the United States. The accident recordkeeping requirements of §390.15 of this part remain applicable to the entities identified in this paragraph when engaged in the interstate charter transportation of passengers;

(3) The occasional transportation of personal property by individuals not for compensation nor in the furtherance of a commercial enterprise;

(4) The transportation of human corpses or sick and injured persons;

(5) The operation of fire trucks and rescue vehicles while involved in emergency and related operations.

[53 FR 18052, May 19, 1988, as amended at 54 FR 12202, Mar. 24, 1989; 58 FR 33776, June 21, 1993; 59 FR 8752, Feb. 23, 1994; 59 FR 67554, Dec. 29, 1994; 62 FR 1296, Jan. 9, 1997]

§390.5 Definitions.

Unless specifically defined elsewhere, in this subchapter:

Accident means—

(1) Except as provided in paragraph (2) of this definition, an occurrence involving a commercial motor vehicle operating on a public road in interstate or intrastate commerce which results in:

(i) A fatality;

(ii) Bodily injury to a person who, as a result of the injury, immediately receives medical treatment away from the scene of the accident; or

(iii) One or more motor vehicles incurring disabling damage as a result of the accident, requiring the motor vehicle to be transported away from the scene by a tow truck or other motor vehicle.

(2) The term *accident* does not include:

(i) An occurrence involving only boarding and alighting from a stationary motor vehicle; or

(ii) An occurrence involving only the loading or unloading of cargo; or

(iii) An occurrence in the course of the operation of a passenger car or a multipurpose passenger vehicle (as defined in §571.3 of this title) by a motor carrier and is not transporting passengers for hire or hazardous materials of a type and quantity that require the motor vehicle to be marked or placarded in accordance with §177.823 of this title.

Alcohol concentration (AC) means the concentration of alcohol in a person's blood or breath. When expressed as a percentage it means grams of alcohol per 100 milliliters of blood or grams of alcohol per 210 liters of breath.

Bus means any motor vehicle designed, constructed, and or used for the transportation of passengers, including taxicabs.

Business district means the territory contiguous to and including a highway when within any 600 feet along such highway there are buildings in use for business or industrial purposes, including but not limited to hotels, banks, or office buildings which occupy at least 300 feet of frontage on one side or 300 feet collectively on both sides of the highway.

Charter transportation of passengers means transportation, using a bus, of a group of persons who pursuant to a common purpose, under a single contract, at a fixed charge for the motor vehicle, have acquired the exclusive use of the motor vehicle to travel together under an itinerary either specified in advance or modified after having left the place of origin.

Commercial motor vehicle means any self-propelled or towed vehicle used on

public highways in interstate commerce to transport passengers or property when:

(a) The vehicle has a gross vehicle weight rating or gross combination weight rating of 4,537 or more kilograms (10,001 or more pounds); or

(b) The vehicle is designed to transport more than 15 passengers, including the driver; or

(c) The vehicle is used in the transportation of hazardous materials in a quantity requiring placarding under regulations issued by the Secretary under the Hazardous Materials Transportation Act (49 U.S.C. 5101 *et. seq.*).

Conviction means an unvacated adjudication of guilt, or a determination that a person has violated or failed to comply with the law in a court of original jurisdiction or by an authorized administrative tribunal, an unvacated forfeiture of bail or collateral deposited to secure the person's appearance in court, a plea of guilty or nolo contendere accepted by the court, the payment of a fine or court cost, or violation of a condition of release without bail, regardless of whether or not the penalty is rebated, suspended, or probated.

Direct assistance means transportation and other relief services provided by a motor carrier or its driver(s) incident to the immediate restoration of essential services (such as, electricity, medial care, sewer, water, telecommunications, and telecommunication transmissions) or essential supplies (such as, food and fuel). It does not include transportation related to long-term rehabilitation of damaged physical infrastructure or routine commercial deliveries after the initial threat to life and property has passed.

Disabling damage means damage which precludes departure of a motor vehicle from the scene of the accident in its usual manner in daylight after simple repairs.

(1) *Inclusions.* Damage to motor vehicles that could have been driven, but would have been further damaged if so driven.

(2) *Exclusions.*

(i) Damage which can be remedied temporarily at the scene of the accident without special tools or parts.

(ii) Tire disablement without other damage even if no spare tire is available.

(iii) Headlamp or taillight damage.

(iv) Damage to turn signals, horn, or windshield wipers which makes them inoperative.

Driveaway-towaway operation means any operation in which a motor vehicle constitutes the commodity being transported and one or more set of wheels of the motor vehicle being transported are on the surface of the roadway during transportation.

Driver means any person who operates any commercial motor vehicle.

Driving a commercial motor vehicle while under the influence of alcohol means committing any one or more of the following acts in a CMV: Driving a CMV while the person's alcohol concentration is 0.04 percent or more; driving under the influence of alcohol, as prescribed by State law; or refusal to undergo such testing as is required by any State or jurisdiction in the enforcement of § 383.51(b)(2)(i)(A) or (B), or § 392.5(a)(2).

Emergency means any hurricane, tornado, storm (e.g. thunderstorm, snowstorm, icestorm, blizzard, sandstorm, etc.), high water, wind-driven water, tidal wave, tsunami, earthquake, volcanic eruption, mud slide, drought, forest fire, explosion, blackout or other occurrence, natural or man-made, which interrupts the delivery of essential services (such as, electricity, medical care, sewer, water, telecommunications, and telecommunication transmissions) or essential supplies (such as, food and fuel) or otherwise immediately threatens human life or public welfare, provided such hurricane, tornado, or other event results in:

(1) A declaration of an emergency by the President of the United States, the Governor of a State, or their authorized representatives having authority to declare emergencies; by the Regional Director of Motor Carriers for the region in which the occurrence happens; or by other Federal, State or local government officials having authority to declare emergencies, or

(2) A request by a police officer for tow trucks to move wrecked or disabled motor vehicles.

Emergency relief means an operation in which a motor carrier or driver of a commercial motor vehicle is providing direct assistance to supplement State and local efforts and capabilities to save lives or property or to protect public health and safety as a result of an emergency as defined in this section.

Employee means any individual, other than an employer, who is employed by an employer and who in the course of his or her employment directly affects commercial motor vehicle safety. Such term includes a driver of a commercial motor vehicle (including an independent contractor while in the course of operating a commercial motor vehicle), a mechanic, and a freight handler. Such term does not include an employee of the United States, any State, any political subdivision of a State, or any agency established under a compact between States and approved by the Congress of the United States who is acting within the course of such employment.

Employer means any person engaged in a business affecting interstate commerce who owns or leases a commercial motor vehicle in connection with that business, or assigns employees to operate it, but such terms does not include the United States, any State, any political subdivision of a State, or an agency established under a compact between States approved by the Congress of the United States.

Exempt intracity zone means the geographic area of a municipality or the commercial zone of that municipality described by the FHWA in 49 CFR part 372, subpart B. The descriptions are printed in appendix F to subchapter B of this chapter. The term ''exempt intracity zone'' does not include any municipality or commercial zone in the State of Hawaii. For purposes of §391.2(d), a driver may be considered to operate a commercial motor vehicle wholly within an exempt intracity zone notwithstanding any common control, management, or arrangement for a continuous carriage or shipment to or from a point without such zone.

Exempt motor carrier means a person engaged in transportation exempt from economic regulation by the Interstate Commerce Commission (ICC) under 49 U.S.C. 10526. ''Exempt motor carriers'' are subject to the safety regulations set forth in this subchapter.

Farm vehicle driver means a person who drives only a commercial motor vehicle that is—

(a) Controlled and operated by a farmer as a private motor carrier of property;

(b) Being used to transport either—

(1) Agricultural products, or

(2) Farm machinery, farm supplies, or both, to or from a farm;

(c) Not being used in the operation of a for-hire motor carrier;

(d) Not carrying hazardous materials of a type or quantity that requires the commercial motor vehicle to be placarded in accordance with §177.823 of this subtitle; and

(e) Being used within 150 air-miles of the farmer's farm.

Farmer means any person who operates a farm or is directly involved in the cultivation of land, crops, or livestock which—

(a) Are owned by that person; or

(b) Are under the direct control of that person.

Fatality means any injury which results in the death of a person at the time of the motor vehicle accident or within 30 days of the accident.

Federal Highway Administrator means the chief executive of the Federal Highway Administration, an agency within the Department of Transportation.

For-hire motor carrier means a person engaged in the transportation of goods or passengers for compensation.

Gross combination weight rating (GCWR) means the value specified by the manufacturer as the loaded weight of a combination (articulated) motor vehicle. In the absence of a value specified by the manufacturer, GCWR will be determined by adding the GVWR of the power unit and the total weight of the towed unit and any load thereon.

Gross vehicle weight rating (GVWR) means the value specified by the manufacturer as the loaded weight of a single motor vehicle.

Hazardous material means a substance or material which has been determined by the Secretary of Transportation to be capable of posing an unreasonable risk to health, safety, and property

when transported in commerce, and which has been so designated.

Hazardous substance means a material, and its mixtures or solutions, that is identified in the appendix to § 172.101, List of Hazardous Substances and Reportable Quantities, of this title when offered for transportation in one package, or in one transport motor vehicle if not packaged, and when the quantity of the material therein equals or exceeds the reportable quantity (RQ). This definition does not apply to petroleum products that are lubricants or fuels, or to mixtures or solutions of hazardous substances if in a concentration less than that shown in the table in § 171.8 of this title, based on the reportable quantity (RQ) specified for the materials listed in the appendix to § 172.101.

Hazardous waste means any material that is subject to the hazardous waste manifest requirements of the EPA specified in 40 CFR part 262 or would be subject to these requirements absent an interim authorization to a State under 40 CFR part 123, subpart F.

Intermittent, casual, or occasional driver means a driver who in any period of 7 consecutive days is employed or used as a driver by more than a single motor carrier. The qualification of such a driver shall be determined and recorded in accordance with the provisions of § 391.63 or 391.65 of this subchapter, as applicable.

Interstate commerce means trade, traffic, or transportation in the United States which is between a place in a State and a place outside of such State (including a place outside of the United States) or is between two places in a State through another State or a place outside of the United States.

Intrastate commerce means any trade, traffic, or transportation in any State which is not described in the term ''interstate commerce.''

Medical examiner means a person who is licensed, certified, and/or registered, in accordance with applicable State laws and regulations, to perform physical examinations. The term includes but is not limited to, doctors of medicine, doctors of osteopathy, physician assistants, advanced practice nurses, and doctors of chiropractic.

Motor carrier means a for-hire motor carrier or a private motor carrier. The term includes a motor carrier's agents, officers and representatives as well as employees responsible for hiring, supervising, training, assigning, or dispatching of drivers and employees concerned with the installation, inspection, and maintenance of motor vehicle equipment and/or accessories. For purposes of subchapter B, this definition includes the terms *employer,* and *exempt motor carrier.*

Motor vehicle means any vehicle, machine, tractor, trailer, or semitrailer propelled or drawn by mechanical power and used upon the highways in the transportation of passengers or property, or any combination thereof determined by the Federal Highway Administration, but does not include any vehicle, locomotive, or car operated exclusively on a rail or rails, or a trolley bus operated by electric power derived from a fixed overhead wire, furnishing local passenger transportation similar to street-railway service.

Operator — See driver.

Other terms — Any other term used in this subchapter is used in its commonly accepted meaning, except where such other term has been defined elsewhere in this subchapter. In that event, the definition therein given shall apply.

Out-of-service order means a declaration by an authorized enforcement officer of a Federal, State, Canadian, Mexican, or local jurisdiction that a driver, a commercial motor vehicle, or a motor carrier operation, is out-of-service pursuant to §§ 386.72, 392.5, 395.13, 396.9, or compatible laws, or the North American Uniform Out-of-Service Criteria.

Person means any individual, partnership, association, corporation, business trust, or any other organized group of individuals.

Principal place of business means a single location designated by the motor carrier, normally its headquarters, where records required by parts 387, 390, 391, and 395 of this subchapter will be maintained and where records required by part 382 must be made available for inspection within two business days after a request has

been made by an authorized representative of the Federal Highway Administration. Provisions in this subchapter are made for maintaining certain records at locations other than the principal place of business.

Private motor carrier means a person who provides transportation of property or passengers, by commercial motor vehicle, and is not a for-hire motor carrier.

Private motor carrier of passengers (business) means a private motor carrier engaged in the interstate transportation of passengers which is provided in the furtherance of a commercial enterprise and is not available to the public at large.

Private motor carrier of passengers (nonbusiness) means private motor carrier involved in the interstate transportation of passengers that does not otherwise meet the definition of a private motor carrier of passengers (business).

Radar detector means any device or mechanism to detect the emission of radio microwaves, laser beams or any other future speed measurement technology employed by enforcement personnel to measure the speed of commercial motor vehicles upon public roads and highways for enforcement purposes. Excluded from this definition are radar detection devices that meet both of the following requirements:

(1) Transported outside the driver's compartment of the commercial motor vehicle. For this purpose, the *driver's* compartment of a passenger-carrying CMV shall include all space designed to accommodate both the driver and the passengers; and

(2) Completely inaccessible to, inoperable by, and imperceptible to the driver while operating the commercial motor vehicle.

Regional Director of Motor Carriers means the Director of the Office of Motor Carriers, Federal Highway Administration, for a given geographical region of the United States.

Regularly employed driver means a driver who, in any period of 7 consecutive days, is employed or used as a driver solely by a single motor carrier.

Residential district means the territory adjacent to and including a highway which is not a business district and for a distance of 300 feet or more along the highway is primarily improved with residences.

School bus means a passenger motor vehicle which is designed or used to carry more than 10 passengers in addition to the driver, and which the Secretary determines is likely to be significantly used for the purpose of transporting preprimary, primary, or secondary school students to such schools from home or from such schools to home.

School bus operation means the use of a school bus to transport only school children and/or school personnel from home to school and from school to home.

Secretary means the Secretary of Transportation.

Special agent See appendix B to subchapter B — Special agents.

State means a State of the United States and the District of Columbia and includes a political subdivision of a State.

Trailer includes:

(a) *Full trailer* means any motor vehicle other than a pole trailer which is designed to be drawn by another motor vehicle and so constructed that no part of its weight, except for the towing device, rests upon the self-propelled towing motor vehicle. A semitrailer equipped with an auxiliary front axle (converter dolly) shall be considered a full trailer.

(b) *Pole trailer* means any motor vehicle which is designed to be drawn by another motor vehicle and attached to the towing motor vehicle by means of a ''reach'' or ''pole,'' or by being ''boomed'' or otherwise secured to the towing motor vehicle, for transporting long or irregularly shaped loads such as poles, pipes, or structural members, which generally are capable of sustaining themselves as beams between the supporting connections.

(c) *Semitrailer* means any motor vehicle, other than a pole trailer, which is designed to be drawn by another motor vehicle and is constructed so that some part of its weight rests upon the self-propelled towing motor vehicle.

Truck means any self-propelled commercial motor vehicle except a truck tractor, designed and/or used for the transportation of property.

Truck tractor means a self-propelled commercial motor vehicle designed and/or used primarily for drawing other vehicles.

United States means the 50 States and the District of Columbia.

[53 FR 18052, May 19, 1988]

EDITORIAL NOTE: For FEDERAL REGISTER citations affecting § 390.5, see the List of CFR Sections Affected in the Finding Aids section of this volume.

§ 390.7 Rules of construction.

(a) In part 325 of subchapter A and in this subchapter, unless the context requires otherwise:

(1) Words imparting the singular include the plural;

(2) Words imparting the plural include the singular;

(3) Words imparting the present tense include the future tense.

(b) In this subchapter the word—

(1) *Officer* includes any person authorized by law to perform the duties of the office;

(2) *Writing* includes printing and typewriting;

(3) *Shall* is used in an imperative sense;

(4) *Must* is used in an imperative sense;

(5) *Should* is used in a recommendatory sense;

(6) *May* is used in a permissive sense; and

(7) *Includes* is used as a word of inclusion, not limitation.

[53 FR 18052, May 19, 1988, as amended at 60 FR 38744, July 28, 1995]

Subpart B—General Requirements and Information

§ 390.9 State and local laws, effect on.

Except as otherwise specifically indicated, subchapter B of this chapter is not intended to preclude States or subdivisions thereof from establishing or enforcing State or local laws relating to safety, the compliance with which would not prevent full compliance with these regulations by the person subject thereto.

§ 390.11 Motor carrier to require observance of driver regulations.

Whenever in part 325 of subchapter A or in this subchapter a duty is prescribed for a driver or a prohibition is imposed upon the driver, it shall be the duty of the motor carrier to require observance of such duty or prohibition. If the motor carrier is a driver, the driver shall likewise be bound.

§ 390.13 Aiding or abetting violations.

No person shall aid, abet, encourage, or require a motor carrier or its employees to violate the rules of this chapter.

§ 390.15 Assistance in investigations and special studies.

(a) A motor carrier shall make all records and information pertaining to an accident available to an authorized representative or special agent of the Federal Highway Administration upon request or as part of any inquiry within such time as the request or inquiry may specify. A motor carrier shall give an authorized representative of the Federal Highway Administration all reasonable assistance in the investigation of any accident including providing a full, true and correct answer to any question of the inquiry.

(b) Motor carriers shall maintain for a period of one year after an accident occurs, an accident register containing at least the following information:

(1) A list of accidents containing for each accident:

(i) Date of accident,

(ii) City or town in which or most near where the accident occurred and the State in which the accident occurred,

(iii) Driver name,

(iv) Number of injuries,

(v) Number of fatalities, and

(vi) Whether hazardous materials, other than fuel spilled from the fuel tanks of motor vehicles involved in the accident, were released.

(2) Copies of all accident reports required by State or other governmental entities or insurers.

(Approved by the Office of Management and Budget under control number 2125–0526)

[58 FR 6729, February 2, 1993, as amended at 60 FR 38744, July 28, 1995; 60 FR 44441, Aug. 28, 1995]

§§ 390.16—390.17 [Reserved]

§ 390.19 Additional equipment and accessories.

Nothing in this subchapter shall be construed to prohibit the use of additional equipment and accessories, not inconsistent with or prohibited by this subchapter, provided such equipment and accessories do not decrease the safety of operation of the commercial motor vehicles on which they are used.

[53 FR 18052, May 19, 1988, as amended at 60 FR 38744, July 28, 1995]

§ 390.21 Marking of commercial motor vehicles.

(a) *General.* Every self-propelled commercial motor vehicle operated in interstate commerce and subject to the rules of subchapter B of this chapter must be marked as specified in paragraphs (b), (c) and (d) of this section. Self-propelled commercial motor vehicles operated by for-hire motor carriers under authority issued by the Interstate Commercial Commission (ICC) may meet the requirements of this section by complying with the marking requirements set forth in 49 CFR part 390, subpart D.

(b) *Nature of marking.* The marking must display the following information:

(1) The name or trade name of the motor carrier operating the self-propelled commercial motor vehicle.

(2) The city or community and State (name abbreviated), in which the carrier maintains its principal place of business or in which the commercial motor vehicle is customarily based.

(3) The motor carrier identification number, if issued by the FHWA, preceded by the letters ''USDOT''.

(4) If the name of any person other than the operating carrier appears on the commercial motor vehicle operated under its own power, either alone or in combination, the name of the operating carrier shall be followed by the information required by paragraphs (b)(1), (2), and (3) of this section, and be preceded by the words ''*operated by*.''

(5) Other identifying information may be displayed on the commercial motor vehicle if it is not inconsistent with the information required by this paragraph.

(c) *Size, shape, location, and color of marking.* The marking must—

(1) Appear on both sides of the self-propelled commercial motor vehicle;

(2) Be in letters that contrast sharply in color with the background on which the letters are placed;

(3) Be readily legible, during daylight hours, from a distance of 50 feet while the commercial motor vehicle is stationary; and

(4) Be kept and maintained in a manner that retains the legibility required by paragraph (c)(3) of this section.

(d) *Construction and durability.* The marking may be painted on the commercial motor vehicle or may consist of a removable device, if that device meets the identification and legibility requirements of this section, and such marking shall be maintained in such a manner as to remain legible as required by this section.

(e) *Rented commercial motor vehicles.* A motor carrier operating a self-propelled commercial motor vehicle under a rental agreement having a term not in excess of 30 calendar days may meet the requirements of this section in either one of two ways:

(1) The commercial motor vehicle is marked in accordance with the provisions of paragraphs (b) through (d) of this section; or

(2) The commercial motor vehicle is marked as set forth below:

(i) The name or trade name of the lessor is displayed in accordance with paragraphs (c) and (d) of this section;

(ii) The city or community and State (name abbreviated), in which the lessor maintians its principal place of business or in which the commercial motor vehicle is customarily based is displayed in accordance with paragraphs (c) and (d) of this section;

(iii) The lessor's identification number, issued by the FHWA, preceded by the letters ''USDOT'' is displayed in

accordance with paragraphs (c) and (d) of this section; and

(iv) The rental agreement entered into by the lessor and the renting motor carrier conspicuously contains the following information:

(A) The name and complete physical address of the principal place of business of the renting motor carrier;

(B) The identification number issued the renting motor carrier by the Federal Highway Administration, preceded by the letters ''USDOT,'' if the motor carrier has been issued such a number. In lieu of the identification number required in this paragraph, the following may be shown:

(*1*) Information which will indicate if the motor carrier is engaged in ''interstate'' or ''intrastate'' commerce; and

(*2*) Information which will indicate if the renting motor carrier is transporting hazardous materials in the rented commercial motor vehicle;

(C) The sentence: ''This lessor cooperates with all federal, state, and local law enforcement officials nationwide to provide the identity of customers who operate this rental commercial motor vehicle;'' and

(v) The rental agreement entered into by the lessor and the renting motor carrier is carried on the rental commercial motor vehicle during the full term of the rental agreement.

[53 FR 18052, May 19, 1988; 53 FR 27689, July 22, 1988, as amended at 53 FR 47543, Nov. 23, 1988; 55 FR 6993, Feb. 28, 1990; 57 FR 3142, Jan. 28, 1992; 60 FR 38744, July 28, 1995; 62 FR 49942, Sept. 24, 1997]

§ 390.23 Relief from regulations.

(a) Parts 390 through 399 of this chapter shall not apply to any motor carrier or driver operating a commercial motor vehicle to provide emergency relief during an emergency, subject to the following time limits:

(1) *Regional emergencies.* (i) The exemption provided by paragraph (a)(1) of this section is effective only when:

(A) An emergency has been declared by the President of the United States, the Governor of a State, or their authorized representatives having authority to declare emergencies; or

(B) The Regional Director of Motor Carriers has declared that a regional emergency exists which justifies an exemption from parts 390 through 399 of this chapter.

(ii) Except as provided in § 390.25, this exemption shall not exceed the duration of the motor carrier's or driver's direct assistance in providing emergency relief, or 30 days from the date of the initial declaration of the emergency or the exemption from the regulations by the Regional Director of Motor Carriers, whichever is less.

(2) *Local emergencies.* (i) The exemption provided by paragraph (a)(2) of this section is effective only when:

(A) An emergency has been declared by a Federal, State or local government official having authority to declare an emergency; or

(B) The Regional Director of Motor Carriers has declared that a local emergency exists which justifies an exemption from parts 390 through 399 of this chapter.

(ii) This exemption shall not exceed the duration of the motor carrier's or driver's direct assistance in providing emergency relief, or 5 days from the date of the initial declaration of the emergency or the exemption from the regulations by the Regional Director of Motor Carriers, whichever is less.

(3) *Tow trucks responding to emergencies.* (i) The exemption provided by paragraph (a)(3) of this section is effective only when a request has been made by a Federal, State or local police officer for tow trucks to move wrecked or disabled motor vehicles.

(ii) This exemption shall not exceed the length of the motor carrier's or driver's direct assistance in providing emergency relief, or 24 hours from the time of the initial request for assistance by the Federal, State or local police officer, whichever is less.

(b) Upon termination of direct assistance to the regional or local emergency relief effort, the motor carrier or driver is subject to the requirements of parts 390 through 399 of this chapter, with the following exception: A driver may return empty to the motor carrier's terminal or the driver's normal work reporting location without complying with parts 390 through 399 of this chapter. However, a driver who informs the motor carrier that he or she needs immediate rest shall be permitted at least 8 consecutive hours off

duty before the driver is required to return to such terminal or location. Having returned to the terminal or other location, the driver must be relieved of all duty and responsibilities. Direct assistance terminates when a driver or commercial motor vehicle is used in interstate commerce to transport cargo not destined for the emergency relief effort, or when the motor carrier dispatches such driver or commercial motor vehicle to another location to begin operations in commerce.

(c) When the driver has been relieved of all duty and responsibilities upon termination of direct assistance to a regional or local emergency relief effort, no motor carrier shall permit or require any driver used by it to drive nor shall any such driver drive in commerce until:

(1) The driver has met the requirements of § 395.3(a) of this chapter; and

(2) The driver has had at least 24 consecutive hours off-duty when:

(A) The driver has been on duty for more than 60 hours in any 7 consecutive days at the time the driver is relieved of all duty if the employing motor carrier does not operate every day in the week, or

(B) The driver has been on duty for more than 70 hours in any 8 consecutive days at the time the driver is relieved of all duty if the employing motor carrier operates every day in the week.

[57 FR 33647, July 30, 1992, as amended at 60 FR 38744, July 28, 1995]

§ 390.25 Extension of relief from regulations—emergencies.

The Regional Director of Motor Carriers may extend the 30-day time period of the exemption contained in § 390.23(a)(1), but not the 5-day time period contained in § 390.23(a)(2) or the 24-hour period contained in § 390.23(a)(3). Any motor carrier or driver seeking to extend the 30-day limit shall obtain approval from the Regional Director of Motor Carriers in the region in which the motor carrier's principal place of business is located before the expiration of the 30-day period. The motor carrier or driver shall give full details of the additional relief requested. The Regional Director of Motor Carriers shall determine if such relief is necessary taking into account both the severity of the ongoing emergency and the nature of the relief services to be provided by the carrier or driver. If the Regional Director of Motor Carriers approves an extension of the exemption, he or she shall establish a new time limit and place on the motor carrier or driver any other restrictions deemed necessary.

[57 FR 33647, July 30, 1992]

§ 390.27 Locations of regional offices of motor carriers.

Region No.	Territory included	Location of regional office
1	Connecticut, Maine, Massachusetts, New Jersey, New Hampshire, New York, Rhode Island, Vermont, Puerto Rico, and the Virgin Islands. That part of Canada east of Highways 19 and 8 from Port Burwell to Goderich, thence a straight line running north through Tobermory and Sudbury, and thence due north to the Canadian border.	Leo W. O'Brien Federal Office Building, Clinton & Pearl Streets, Room 737, Albany, NY 12207–2334.
3	Delaware, District of Columbia, Maryland, Pennsylvania, Virginia, and West Virginia	City Crescent Building, #10 South Howard Street, Suite 4000, Baltimore, MD 21201–2819.
4	Alabama, Florida, Georgia, Kentucky, Mississippi, North Carolina, South Carolina, and Tennessee	1720 Peachtree Road, NW., Suite 200, Atlanta, GA 30367–2349.
5	Illinois, Indiana, Michigan, Minnesota, Ohio, and Wisconsin. That part of Canada west of Highways 19 and 8 from Port Burwell to Goderich, thence a straight line running north through Tobermory and Sudbury, and thence due north to the Canadian border, and east of the boundary between the Provinces of Ontario and Manitoba to Hudson Bay and thence a straight line north to the Canadian border.	19900 Governors Drive, Suite 210, Olympia Fields, IL 60461–1021.
6	Arkansas, Louisiana, New Mexico, Oklahoma, and Texas. All of Mexico, except the States of Baja California and Sonora and the Territory of Baja California Sur., Mexico. All nations south of Mexico.	Room 8A00, Federal Building, 819 Taylor Street, P.O. Box 902003, Fort Worth, TX 76102.
7	Iowa, Kansas, Missouri, and Nebraska	6301 Rockhill Road, P.O. Box 419715, Kansas City, MO 64141–6715.
8	Colorado, Montana, North Dakota, South Dakota, Utah, Wyoming. That part of Canada west of the boundary between the Provinces of Ontario and Manitoba to Hudson Bay and thence a straight line due north to the Canadian border, and east of Highway 95 from Kingsgate to Blaeberry and thence a straight line due north to the Canadian border.	555 Zang Street, room 190, Lakewood, CO 80228–1014.
9	Arizona, California, Hawaii, Nevada, Guam, American Samoa, and Mariana Islands. The States of Baja California and Sonora, Mexico, and the Territory of Baja California Sur., Mexico.	201 Mission Street, Suite 2100, San Francisco, CA 94105.
10	Alaska, Idaho, Oregon and Washington. That part of Canada west of Highway 95 from Kingsgate to Blaeberry and thence a straight line due north to the Canadian border, and all the Province of British Columbia.	KOIN Center, suite 600, 222 SW Columbia Street, Portland, OR 97201–2491.

[61 FR 9566, Mar. 8, 1996]

§ 390.29 [Reserved]

§ 390.31 Copies of records or documents.

(a) All records and documents required to be maintained under this subchapter must be preserved in their original form for the periods specified, unless the records and documents are suitably photographed and the microfilm is retained in lieu of the original record for the required retention period.

(b) To be acceptable in lieu of original records, photographic copies of records must meet the following minimum requirements:

(1) Photographic copies shall be no less readily accessible than the original record or document as normally filed or preserved would be and suitable means or facilities shall be available to locate, identify, read, and reproduce such photographic copies.

(2) Any significant characteristic, feature or other attribute of the original record or document, which photography in black and white will not preserve, shall be clearly indicated before the photograph is made.

(3) The reverse side of printed forms need not be copied if nothing has been added to the printed matter common to all such forms, but an identified specimen of each form shall be on the film for reference.

(4) Film used for photographing copies shall be of permanent record-type meeting in all respects the minimum specifications of the National Bureau of Standards, and all processes recommended by the manufacturer shall be observed to protect it from deterioration or accidental destruction.

(5) Each roll of film shall include a microfilm of a certificate or certificates stating that the photographs are direct or facsimile reproductions of the original records. Such certificate(s) shall be executed by a person or persons having personal knowledge of the material covered thereby.

(c) All records and documents required to be maintained under this subchapter may be destroyed after they have been suitably photographed for preservation.

(d) *Exception*. All records except those requiring a signature may be maintained through the use of computer technology provided the motor carrier can produce, upon demand, a computer printout of the required data.

§ 390.33 Commercial motor vehicles used for purposes other than defined.

Whenever a commercial motor vehicle of one type is used to perform the functions normally performed by a commercial motor vehicle of another type, the requirements of this subchapter and part 325 of subchapter A shall apply to the commercial motor vehicle and to its operation in the same manner as though the commercial motor vehicle were actually a commercial motor vehicle of the latter type. *Example:* If a commercial motor vehicle other than a bus is used to perform the functions normally performed by a bus, the regulations pertaining to buses and to the transportation of passengers shall apply to that commercial motor vehicle.

[53 FR 18052, May 19, 1988, as amended at 60 FR 38744, July 28, 1995]

§ 390.35 Certificates, reports, and records: Falsification, reproduction, or alteration.

No motor carrier, its agents, officers, representatives, or employees shall make or cause to make—

(a) A fraudulent or intentionally false statement on any application, certificate, report, or record required by part 325 of subchapter A or this subchapter;

(b) A fraudulent or intentionally false entry on any application, certificate, report, or record required to be used, completed, or retained, to comply with any requirement of this subchapter or part 325 of subchapter A; or

(c) A reproduction, for fraudulent purposes, of any application, certificate, report, or record required by this subchapter or part 325 of subchapter A.

§ 390.37 Violation and penalty.

Any person who violates the rules set forth in this subchapter or part 325 of subchapter A may be subject to civil or criminal penalties.

Subpart C [Reserved]

Subpart D—Identification of Vehicles

AUTHORITY: 49 U.S.C. 10922, 10530, and 11106; 5 U.S.C. 553.

SOURCE: 55 FR 11199, Mar. 27, 1990, unless otherwise noted. Redesignated at 61 FR 54710, Oct. 21, 1996.

§ 390.401 Applicability.

These rules govern all for-hire motor carriers except those providing:

(a) Joint, through, regular-route passenger service under continuing lease or interchange arrangements, if the vehicle owner's name and ''MC'' number are displayed as prescribed at § 390.403, and if the carriers have filed with the Commission's appropriate Regional Director(s) and posted in each terminal and ticket agency on the involved routes a published schedule showing the points between which each joint carrier assumes control and responsibility for the vehicle's operation; and

(b) Nonscheduled, charter, luxury-type passenger service using limousine-type vehicles with a capacity of six or fewer passengers.

[55 FR 11199, Mar. 27, 1990. Redesignated at 61 FR 54710, Oct. 21, 1996; 62 FR 49942, Sept. 24, 1997]

§ 390.403 Method of identification.

Each vehicle operated under its own power shall display on both sides the name (or trade name) and ''MC'' number(s) of the carrier under whose authority the vehicle is being operated. The ''MC'' number(s) shall be in the following form: ''I.C.C. MC–_____'' but shall not include any sub numbers. The name of any other person operating the vehicle shall appear on the vehicle following the words ''operated by'' in addition to the other information required by this section. Additional identification may be displayed if consistent with these rules.

§ 390.405 Size, shape, and color.

The name(s) and number(s) prescribed above shall be displayed, by removable device if desired, in letters and figures in sharp color contrast to their background, and they shall be of a size, shape, and color readily legible in daylight from a distance of 50 feet while the vehicle is stationary.

§ 390.407 Driveaway service.

In driveaway service, a removable device may be affixed on both sides or at the rear of the single driven vehicle. In a combination driveaway operation, the device may be affixed on both sides of any one unit or at the rear of the last unit.

PART 391—QUALIFICATIONS OF DRIVERS

Subpart A—General

Sec.
391.1 Scope of the rules in this part; additional qualifications; duties of carrier-drivers.
391.2 General exemptions.

Subpart B—Qualification and Disqualification of Drivers

391.11 Qualifications of drivers.
391.15 Disqualification of drivers.

Subpart C—Background and Character

391.21 Application for employment.
391.23 Investigation and inquiries.
391.25 Annual review of driving record.
391.27 Record of violations.

Subpart D—Tests

391.31 Road test.
391.33 Equivalent of road test.

Subpart E—Physical Qualifications and Examinations

391.41 Physical qualifications for drivers.
391.43 Medical examination; certificate of physical examination.
391.45 Persons who must be medically examined and certified.
391.47 Resolution of conflicts of medical evaluation.
391.49 Waiver of certain physical defects.

Subpart F—Files and Records

391.51 Driver qualification files.

Subpart G—Limited Exemptions

391.61 Drivers who were regularly employed before January 1, 1971.
391.62 Limited exemptions for intra-city zone drivers.
391.63 Intermittent, casual, or occasional drivers.

391.64 Grandfathering for certain drivers participating in vision and diabetes waiver study programs.
391.65 Drivers furnished by other motor carriers.
391.67 Farm vehicle drivers of articulated commercial motor vehicles.
391.68 Private motor carrier of passengers (nonbusiness).
391.69 Drivers operating in Hawaii.
391.71 Intrastate drivers of commercial motor vehicles transporting Class 3 combustible liquids.
391.73 Private motor carrier of passengers (business).

AUTHORITY: 49 U.S.C. 504, 31133, 31136, and 31502; and 49 CFR 1.48.

SOURCE: 35 FR 6460, Apr. 22, 1970, unless otherwise noted.

Subpart A—General

§ 391.1 Scope of the rules in this part; additional qualifications; duties of carrier-drivers.

(a) The rules in this part establish minimum qualifications for persons who drive commercial motor vehicles as, for, or on behalf of motor carriers. The rules in this part also establish minimum duties of motor carriers with respect to the qualifications of their drivers.

(b) A motor carrier who employs himself/herself as a driver must comply with both the rules in this part that apply to motor carriers and the rules in this part that apply to drivers.

[35 FR 6460, Apr. 22, 1970, as amended at 53 FR 18057, May 19, 1988; 60 FR 38744, July 28, 1995]

§ 391.2 General exemptions.

(a) *Farm custom operation.* The rules in this part do not apply to a driver who drives a commercial motor vehicle controlled and operated by a person engaged in custom-harvesting operations, if the commercial motor vehicle is used to—

(1) Transport farm machinery, supplies, or both, to or from a farm for custom-harvesting operations on a farm; or

(2) Transport custom-harvested crops to storage or market.

(b) *Apiarian industries.* The rules in this part do not apply to a driver who is operating a commercial motor vehicle controlled and operated by a beekeeper engaged in the seasonal transportation of bees.

(c) *Certain farm vehicle drivers.* The rules in this part do not apply to a farm vehicle driver except a farm vehicle driver who drives an articulated (combination) commercial motor vehicle, as defined in § 390.5. (For limited exemptions for farm vehicle drivers of articulated commercial motor vehicles, see § 391.67.)

[36 FR 24219, Dec. 22, 1971, as amended at 37 FR 26112, Dec. 8, 1972; 54 FR 12202, Mar. 24, 1989; 60 FR 38745, July 28, 1995; 61 FR 13346, Mar. 26, 1996; 61 FR 17253, Apr. 19, 1996]

Subpart B—Qualification and Disqualification of Drivers

§ 391.11 Qualifications of drivers.

(a) A person shall not drive a commercial motor vehicle unless he/she is qualified to drive a commercial motor vehicle. Except as provided in § 391.63, a motor carrier shall not require or permit a person to drive a commercial motor vehicle unless that person is qualified to drive a commercial motor vehicle.

(b) Except as provided in subpart G of this part, a person is qualified to drive a commercial motor vehicle if he/she—

(1) Is at least 21 years old;

(2) Can read and speak the English language sufficiently to converse with the general public, to understand highway traffic signs and signals in the English language, to respond to official inquiries, and to make entries on reports and records;

(3) Can, by reason of experience, training, or both, safely operate the type of commercial motor vehicle he/she drives;

(4) Can, by reason of experience, training, or both, determine whether the cargo he/she transports (including baggage in a passenger-carrying commercial motor vehicle) has been properly located, distributed, and secured in or on the commercial motor vehicle he/she drives;

(5) Is familiar with methods and procedures for securing cargo in or on the commercial motor vehicle he/she drives.

(6) Is physically qualified to drive a commercial motor vehicle in accordance with subpart E—Physical Qualifications and Examinations of part 391;

(7) Has a currently valid commercial motor vehicle operator's license issued only from one State or jurisdiction;

(8) Has prepared and furnished the motor carrier that employs him/her with the list of violations or the certificate as required by § 391.27;

(9) Is not disqualified to drive a commercial motor vehicle under the rules in § 391.15;

(10) Has successfully completed a driver's road test and has been issued a certificate of driver's road test in accordance with § 391.31, or has presented an operator's license or a certificate of road test which the motor carrier that employs him/her has accepted as equivalent to a road test in accordance with § 391.33;

(11) Has completed and furnished the motor carrier that employs him/her with an application for employment in accordance with § 391.21.

[35 FR 6460, Apr. 22, 1970, as amended at 35 FR 17420, Nov. 13, 1970; 35 FR 19181, Dec. 18, 1970; 36 FR 222, Jan. 7, 1971, 36 FR 24220, Dec. 22, 1971; 45 FR 46424, July 10, 1980; 52 FR 20589, June 1, 1987; 59 FR 60323, Nov. 23, 1994; 60 FR 38744, 38745, July 28, 1995]

§ 391.15 Disqualification of drivers.

(a) *General.* A driver who is disqualified shall not drive a commercial motor vehicle. A motor carrier shall not require or permit a driver who is disqualified to drive a commercial motor vehicle.

(b) *Disqualification for loss of driving privileges.* A driver is disqualified for the duration of his/her loss of his/her privilege to operate a commercial motor vehicle on public highways, either temporarily or permanently, by reason of the revocation, suspension, withdrawal, or denial of an operator's license, permit, or privilege, until that operator's license, permit, or privilege is restored by the authority that revoked, suspended, withdrew, or denied it.

(c) *Disqualification for criminal and other offenses*— (1) *General rule.* A driver who is convicted of (or forfeits bond or collateral upon a charge of) a disqualifying offense specified in paragraph (c)(2) of this section is disqualified for the period of time specified in paragraph (c)(3) of this section, if—

(i) The offense was committed during on-duty time as defined in § 395.2(a) of this subchapter or as otherwise specified; and

(ii) The driver is employed by a motor carrier or is engaged in activities that are in furtherance of a commercial enterprise in interstate, intrastate, or foreign commerce;

(2) *Disqualifying offenses.* The following offenses are disqualifying offenses:

(i) Driving a commercial motor vehicle while under the influence of alcohol. This shall include:

(A) Driving a commercial motor vehicle while the person's alcohol concentration is 0.04 percent or more;

(B) Driving under the influence of alcohol, as prescribed by State law; or

(C) Refusal to undergo such testing as is required by any State or jurisdiction in the enforcement of § 391.15(c)(2)(i) (A) or (B), or § 392.5(a)(2).

(ii) Driving a commercial motor vehicle under the influence of a 21 CFR 1308.11 *Schedule I* identified controlled substance, an amphetamine, a narcotic drug, a formulation of an amphetamine, or a derivative of a narcotic drug;

(iii) Transportation, possession, or unlawful use of a 21 CFR 1308.11 *Schedule I* identified controlled substance, amphetamines, narcotic drugs, formulations of an amphetamine, or derivatives of narcotic drugs while the driver is on duty, as the term on-duty time is defined in § 395.2 of this subchapter;

(iv) Leaving the scene of an accident while operating a commercial motor vehicle; or

(v) A felony involving the use of a commercial motor vehicle.

(3) *Duration of disqualification*—(i) *First offenders.* A driver is disqualified for 1 year after the date of conviction or forfeiture of bond or collateral if, during the 3 years preceding that date, the driver was not convicted of, or did not forfeit bond or collateral upon a charge of an offense that would disqualify the driver under the rules of this section. Exemption. The period of disqualification is 6 months if the conviction or forfeiture of bond or collateral soley concerned the transportation

or possession of substances named in paragraph (c)(2)(iii) of this section.

(ii) *Subsequent offenders.* A driver is disqualified for 3 years after the date of his/her conviction or forfeiture of bond or collateral if, during the 3 years preceding that date, he/she was convicted of, or forfeited bond or collateral upon a charge of, an offense that would disqualify him/her under the rules in this section.

(d) *Disqualification for violation of out-of-service orders*—(1) *General rule.* A driver who is convicted of violating an out-of-service order is disqualified for the period of time specified in paragraph (d)(2) of this section.

(2) *Duration of disqualification for violation of out-of-service orders*—(i) *First violation.* A driver is disqualified for not less than 90 days nor more than one year if the driver is convicted of a first violation of an out-of-service order.

(ii) *Second violation.* A driver is disqualified for not less than one year nor more than five years if, during any 10-year period, the driver is convicted of two violations of out-of-service orders in separate incidents.

(iii) *Third or subsequent violation.* A driver is disqualified for not less than three years nor more than five years if, during any 10-year period, the driver is convicted of three or more violations of out-of-service orders in separate incidents.

(iv) *Special rule for hazardous materials and passenger offenses.* A driver is disqualified for a period of not less than 180 days nor more than two years if the driver is convicted of a first violation of an out-of-service order while transporting hazardous materials required to be placarded under the Hazardous Materials Transportation Act (49 U.S.C. 5101 *et seq.*), or while operating commercial motor vehicles designed to transport more than 15 passengers, including the driver. A driver is disqualified for a period of not less than three years nor more than five years if, during any 10-year period, the driver is convicted of any subsequent violations of out-of-service orders, in separate incidents, while transporting hazardous materials required to be placarded under the Hazardous Materials Transportation Act, or while operating commercial motor vehicles designed to transport more than 15 passengers, including the driver.

[37 FR 24902, Nov. 23, 1972, as amended at 49 FR 44215, Nov. 5, 1984; 51 FR 8200, Mar. 10, 1986; 53 FR 18057, May 19, 1988; 53 FR 39051, Oct. 4, 1988; 54 FR 40788, Oct. 3, 1989; 59 FR 26028, May 18, 1994; 60 FR 38744, 38745, July 28, 1995; 62 FR 37152, July 11, 1997]

Subpart C—Background and Character

§ 391.21 Application for employment.

(a) Except as provided in subpart G of this part, a person shall not drive a commercial motor vehicle unless he/she has completed and furnished the motor carrier that employs him/her with an application for employment that meets the requirements of paragraph (b) of this section.

(b) The application for employment shall be made on a form furnished by the motor carrier. Each application form must be completed by the applicant, must be signed by him/her, and must contain the following information:

(1) The name and address of the employing motor carrier;

(2) The applicant's name, address, date of birth, and social security number;

(3) The addresses at which the applicant has resided during the 3 years preceding the date on which the application is submitted;

(4) The date on which the application is submitted;

(5) The issuing State, number, and expiration date of each unexpired commercial motor vehicle operator's license or permit that has been issued to the applicant;

(6) The nature and extent of the applicant's experience in the operation of motor vehicles, including the type of equipment (such as buses, trucks, truck tractors, semitrailers, full trailers, and pole trailers) which he/she has operated;

(7) A list of all motor vehicle accidents in which the applicant was involved during the 3 years preceding the date the application is submitted, specifying the date and nature of each accident and any fatalities or personal injuries it caused;

(8) A list of all violations of motor vehicle laws or ordinances (other than violations involving only parking) of which the applicant was convicted or forfeited bond or collateral during the 3 years preceding the date the application is submitted;

(9) A statement setting forth in detail the facts and circumstances of any denial, revocation, or suspension of any license, permit, or privilege to operate a motor vehicle that has been issued to the applicant, or a statement that no such denial, revocation, or suspension has occurred;

(10) A list of the names and addresses of the applicant's employers during the 3 years preceding the date the application is submitted, together with the dates he/she was employed by, and his/her reason for leaving the employ of, each employer;

(11) For those drivers applying to operate a commercial motor vehicle as defined by Part 383 of this subchapter, a list of the names and addresses of the applicant's employers during the 7-year period preceding the 3 years contained in paragraph (b)(10) of this section for which the applicant was an operator of a commercial motor vehicle, together with the dates of employment and the reasons for leaving such employment; and

(12) The following certification and signature line, which must appear at the end of the application form and be signed by the applicant:

This certifies that this application was completed by me, and that all entries on it and information in it are true and complete to the best of my knowledge.

_____

(Date)

_____

(Applicant's signature)

(c) A motor carrier may require an applicant to provide information in addition to the information required by paragraph (b) of this section on the application form.

(d) Before an application is submitted, the motor carrier shall inform the applicant that the information he/she provides in accordance with paragraph (b) (10) of this section may be used, and the applicant's prior employers may be contacted, for the purpose of investigating the applicant's background as required by § 391.23.

[35 FR 6460, Apr. 22, 1970, as amended at 35 FR 17420, Nov. 13, 1970; 52 FR 20589, June 1, 1987; 60 FR 38744, July 28, 1995]

§ 391.23 Investigation and inquiries.

(a) Except as provided in subpart G of this part, each motor carrier shall make the following investigations and inquiries with respect to each driver it employs, other than a person who has been a regularly employed driver of the motor carrier for a continuous period which began before January 1, 1971:

(1) An inquiry into the driver's driving record during the preceding 3 years to the appropriate agency of every State in which the driver held a motor vehicle operator's license or permit during those 3 years; and

(2) An investigation of the driver's employment record during the preceding 3 years.

(b) The inquiry to State agencies required by paragraph (a)(1) of this section must be made within 30 days of the date the driver's employment begins and shall be made in the form and manner those agencies prescribe. A copy of the response by each State agency, showing the driver's driving record or certifying that no driving record exists for that driver, shall be retained in the carrier's files as part of the driver's qualification file.

(c) The investigation of the driver's employment record required by paragraph (a)(2) of this section must be made within 30 days of the date his/her employment begins. The investigation may consist of personal interviews, telephone interviews, letters, or any other method of obtaining information that the carrier deems appropriate. Each motor carrier must make a written record with respect to each past employer who was contacted. The record must include the past employer's name and address, the date he/she was contacted, and his/her comments with respect to the driver. The record shall be retained in the motor carrier's files as part of the driver's qualification file.

[35 FR 6460, Apr. 22, 1970, as amended at 35 FR 17420, Nov. 13, 1970]

§ 391.25 Annual review of driving record.

Except as provided in subpart G of this part, each motor carrier shall, at least once every 12 months, review the driving record of each driver it employs to determine whether that driver meets minimum requirements for safe driving or is disqualified to drive a commercial motor vehicle pursuant to § 391.15. In reviewing a driving record, the motor carrier must consider any evidence that the driver has violated applicable provisions of the Federal Motor Carrier Safety Regulations and the Hazardous Materials Regulations. The motor carrier must also consider the driver's accident record and any evidence that the driver has violated laws governing the operation of motor vehicles, and must give great weight to violations, such as speeding, reckless driving, and operating while under the influence of alcohol or drugs, that indicate that the driver has exhibited a disregard for the safety of the public. A note, setting forth the date upon which the review was performed and the name of the person who reviewed the driving record, shall be included in the driver's qualification file.

[35 FR 6460, Apr. 22, 1970, as amended at 35 FR 17420, Nov. 13, 1970; 60 FR 38744, July 28, 1995]

§ 391.27 Record of violations.

(a) Except as provided in subpart G of this part, each motor carrier shall, at least once every 12 months, require each driver it employs to prepare and furnish it with a list of all violations of motor vehicle traffic laws and ordinances (other than violations involving only parking) of which the driver has been convicted or on account of which he/she has forfeited bond or collateral during the preceding 12 months.

(b) Each driver shall furnish the list required in accordance with paragraph (a) of this section. If the driver has not been convicted of, or forfeited bond or collateral on account of, any violation which must be listed, he/she shall so certify.

(c) The form of the driver's list or certification shall be prescribed by the motor carrier. The following form may be used to comply with this section:

DRIVER'S CERTIFICATION

I certify that the following is a true and complete list of traffic violations (other than parking violations) for which I have been convicted or forfeited bond or collateral during the past 12 months.

Date of conviction Offense
Location Type of motor vehicle operated

If no violations are listed above, I certify that I have not been convicted or forfeited bond or collateral on account of any violation required to be listed during the past 12 months.

(Date of certification) (Driver's signature)

(Motor carrier's name)

(Motor carrier's address)

(Reviewed by: Signature) (Title)

(d) The motor carrier shall retain the list or certificate required by this section, or a copy of it, in its files as part of the driver's qualification file.

(e) Drivers who have provided information required by § 383.31 of this subchapter need not repeat that information in the annual list of violations required by this section.

[35 FR 6460, Apr. 22, 1970, as amended at 35 FR 17420, Nov. 13, 1970; 52 FR 20589, June 1, 1987; 60 FR 38745, July 28, 1995]

Subpart D—Tests

§ 391.31 Road test.

(a) Except as provided in subpart G, a person shall not drive a commercial motor vehicle unless he/she has first successfully completed a road test and has been issued a certificate of driver's road test in accordance with this section.

(b) The road test shall be given by the motor carrier or a person designated by it. However, a driver who is a motor carrier must be given the test by a person other than himself/herself. The test shall be given by a person who is competent to evaluate and determine whether the person who takes the test has demonstrated that he/she is capable of operating the commercial motor vehicle, and associated equipment, that the motor carrier intends to assign him/her.

(c) The road test must be of sufficient duration to enable the person who gives it to evaluate the skill of the person who takes it at handling the commercial motor vehicle, and associated

equipment, that the motor carriers intends to assign to him/her. As a minimum, the person who takes the test must be tested, while operating the type of commercial motor vehicle the motor carrier intends to assign him/her, on his/her skill at performing each of the following operations:

(1) The pretrip inspection required by § 392.7 of this subchapter;

(2) Coupling and uncoupling of combination units, if the equipment he/she may drive includes combination units;

(3) Placing the commercial motor vehicle in operation;

(4) Use of the commercial motor vehicle's controls and emergency equipment;

(5) Operating the commercial motor vehicle in traffic and while passing other motor vehicles;

(6) Turning the commercial motor vehicle;

(7) Braking, and slowing the commercial motor vehicle by means other than braking; and

(8) Backing and parking the commercial motor vehicle.

(d) The motor carrier shall provide a road test form on which the person who gives the test shall rate the performance of the person who takes it at each operation or activity which is a part of the test. After he/she completes the form, the person who gave the test shall sign it.

(e) If the road test is successfully completed, the person who gave it shall complete a certificate of driver's road test in substantially the form prescribed in paragraph (f) of this section.

(f) The form for the certificate of driver's road test is substantially as follows:

CERTIFICATION OF ROAD TEST

Driver's name _____

Social Security No _____

Operator's or Chauffeur's License No _____

State _____

Type of power unit _____ Type of trailer(s) _____

If passenger carrier, type of bus _____

This is to certify that the above-named driver was given a road test under my supervision on _____, 19___, consisting of approximately _____ miles of driving.

It is my considered opinion that this driver possesses sufficient driving skill to operate safely the type of commercial motor vehicle listed above.

(Signature of examiner)

(Title)

(Organization and address of examiner)

(g) A copy of the certificate required by paragraph (e) of this section shall be given to the person who was examined. The motor carrier shall retain in the driver qualification file of the person who was examined—

(1) The original of the signed road test form required by paragraph (d) of this section; and

(2) The original, or a copy of, the certificate required by paragraph (e) of this section.

[35 FR 6460, Apr. 22, 1970, as amended at 36 FR 223, Jan. 7, 1971; 59 FR 8752, Feb. 23, 1994; 60 FR 38744, July 28, 1995]

§ 391.33 Equivalent of road test.

(a) In place of, and as equivalent to, the road test required by § 391.31, a person who seeks to drive a commercial motor vehicle may present, and a motor carrier may accept—

(1) A valid operator's license which has been issued to him/her by a State that licenses drivers to operate specific categories of commercial motor vehicles and which, under the laws of that State, licenses him/her after successful completion of a road test in a commercial motor vehicle of the type the motor carrier intends to assign to him/her; or

(2) A copy of a valid certificate of driver's road test issued to him/her pursuant to § 391.31 within the preceding 3 years.

(b) If a driver presents, and a motor carrier accepts, a license or certificate as equivalent to the road test, the motor carrier shall retain a legible copy of the license or certificate in its files as part of the driver's qualification file.

(c) A motor carrier may require any person who presents a license or certificate as equivalent to the road test to take a road test or any other test of his/her driving skill as a condition to his/her employment as a driver.

[35 FR 6460, Apr. 22, 1970, as amended at 60 FR 38744, July 28, 1995]

Subpart E—Physical Qualifications and Examinations

§ 391.41 Physical qualifications for drivers.

(a) A person shall not drive a commercial motor vehicle unless he/she is physically qualified to do so and, except as provided in § 391.67, has on his/her person the original, or a photographic copy, of a medical examiner's certificate that he/she is physically qualified to drive a commercial motor vehicle.

(b) A person is physically qualified to drive a commercial motor vehicle if that person—

(1) Has no loss of a foot, a leg, a hand, or an arm, or has been granted a waiver pursuant to § 391.49;

(2) Has no impairment of:

(i) A hand or finger which interferes with prehension or power grasping; or

(ii) An arm, foot, or leg which interferes with the ability to perform normal tasks associated with operating a commercial motor vehicle; or any other significant limb defect or limitation which interferes with the ability to perform normal tasks associated with operating a commercial motor vehicle; or has been granted a waiver pursuant to § 391.49.

(3) Has no established medical history or clinical diagnosis of diabetes mellitus currently requiring insulin for control;

(4) Has no current clinical diagnosis of myocardial infarction, angina pectoris, coronary insufficiency, thrombosis, or any other cardiovascular disease of a variety known to be accompanied by syncope, dyspnea, collapse, or congestive cardiac failure.

(5) Has no established medical history or clinical diagnosis of a respiratory dysfunction likely to interfere with his/her ability to control and drive a commercial motor vehicle safely;

(6) Has no current clinical diagnosis of high blood pressure likely to interfere with his/her ability to operate a commercial motor vehicle safely;

(7) Has no established medical history or clinical diagnosis of rheumatic, arthritic, orthopedic, muscular, neuromuscular, or vascular disease which interferes with his/her ability to control and operate a commercial motor vehicle safely;

(8) Has no established medical history or clinical diagnosis of epilepsy or any other condition which is likely to cause loss of consciousness or any loss of ability to control a commercial motor vehicle;

(9) Has no mental, nervous, organic, or functional disease or psychiatric disorder likely to interfere with his/her ability to drive a commercial motor vehicle safely;

(10) Has distant visual acuity of at least 20/40 (Snellen) in each eye without corrective lenses or visual acuity separately corrected to 20/40 (Snellen) or better with corrective lenses, distant binocular acuity of at least 20/40 (Snellen) in both eyes with or without corrective lenses, field of vision of at least 70° in the horizontal Meridian in each eye, and the ability to recognize the colors of traffic signals and devices showing standard red, green, and amber;

(11) First perceives a forced whispered voice in the better ear at not less than 5 feet with or without the use of a hearing aid or, if tested by use of an audiometric device, does not have an average hearing loss in the better ear greater than 40 decibels at 500 Hz, 1,000 Hz, and 2,000 Hz with or without a hearing aid when the audiometric device is calibrated to American National Standard (formerly ASA Standard) Z24.5—1951.

(12)(i) Does not use a controlled substance identified in 21 CFR 1308.11 *Schedule I*, an amphetamine, a narcotic, or any other habit-forming drug.

(ii) *Exception*. A driver may use such a substance or drug, if the substance or drug is prescribed by a licensed medical practitioner who:

(A) Is familiar with the driver's medical history and assigned duties; and

(B) Has advised the driver that the prescribed substance or drug will not adversely affect the driver's ability to safely operate a commercial motor vehicle; and

(13) Has no current clinical diagnosis of alcoholism.

[35 FR 6460, Apr. 22, 1970, as amended at 35 FR 17420, Nov. 13, 1970; 36 FR 223, Jan. 7, 1971; 36 FR 12857, July 8, 1971; 43 FR 56900, Dec. 5, 1978; 55 FR 3554, Feb. 1, 1990; 60 FR 38744, July 28, 1995; 62 FR 37152, July 11, 1997]

§ 391.43 Medical examination; certificate of physical examination.

(a) Except as provided by paragraph (b) of this section, the medical examination shall be performed by a licensed medical examiner as defined in § 390.5 of this subchapter.

(b) A licensed optometrist may perform so much of the medical examination as pertains to visual acuity, field of vision, and the ability to recognize colors as specified in paragraph (10) of § 391.41(b).

(c) Medical examiners shall:

(1) Be knowledgeable of the specific physical and mental demands associated with operating a commercial motor vehicle and the requirements of this subpart, including the medical regulatory criteria prepared by the FHWA as guidelines to aid the medical examiner in making the qualification determination; and

(2) Be proficient in the use of and use the medical protocols necessary to adequately perform the medical examination required by this section.

(d) Any driver authorized to operate a commercial motor vehicle within an exempt intracity zone pursuant to § 391.2(d) shall furnish the examining medical examiner with a copy of the medical findings that led to the issuance of the first certificate of medical examination which allowed the driver to operate a commercial motor vehicle wholly within an exempt intracity zone.

(e) Any driver operating under a limited exemption authorized by § 391.64 shall furnish the medical examiner with a copy of the annual medical findings of the endocrinologist, ophthalmologist or optometrist, as required under that section. If the medical examiner finds the driver qualified under the limited exemption in § 391.64, such fact shall be noted on the Medical Examiner's Certificate.

(f) The medical examination shall be performed, and its results shall be recorded, substantially in accordance with the following instructions and examination form. Existing forms may be used until current printed supplies are depleted or until March 31, 1997.

INSTRUCTIONS FOR PERFORMING AND RECORDING PHYSICAL EXAMINATIONS

The examining medical examiner should review these instructions before performing the physical examination. Answer each question yes or no where appropriate.

The examining medical examiner should be aware of the rigorous physical demands and mental and emotional responsibilities placed on the driver of a commercial motor vehicle. In the interest of public safety the examining medical examiner is required to certify that the driver does not have any physical, mental, or organic defect of such a nature as to affect the driver's ability to operate safely a commercial motor vehicle.

General information. The purpose of this history and physical examination is to detect the presence of physical, mental, or organic defects of such a character and extent as to affect the applicant's ability to operate a commercial motor vehicle safely. The examination should be made carefully and at least as complete as indicated by the attached form. History of certain defects may be cause for rejection or indicate the need for making certain laboratory tests or a further, and more stringent, examination. Defects may be recorded which do not, because of their character or degree, indicate that certification of physical fitness should be denied. However, these defects should be discussed with the applicant and he/she should be advised to take the necessary steps to insure correction, particularly of those which, if neglected, might lead to a condition likely to affect his/her ability to drive safely.

General appearance and development. Note marked overweight. Note any posture defect, perceptible limp, tremor, or other defects that might be caused by alcoholism, thyroid intoxication, or other illnesses. The Federal Motor Carrier Safety Regulations provide that no driver shall use a narcotic or other habit-forming drugs.

Head-eyes. When other than the Snellen chart is used, the results of such test must be expressed in values comparable to the standard Snellen test. If the applicant wears corrective lenses, these should be worn while applicant's visual acuity is being tested. If appropriate, indicate on the Medical Examiner's Certificate by checking the box, ''Qualified only when wearing corrective lenses.'' In recording distance vision use 20 feet as normal. Report all vision as a fraction with 20 as numerator and the smallest type read at 20 feet as denominator. Note ptosis, discharge, visual fields, ocular muscle imbalance, color blindness, corneal scar,

exophtalmos, or strabismus, uncorrected by corrective lenses. Monocular drivers are not qualified to operate commercial motor vehicles under existing Federal Motor Carrier Safety Regulations. If the driver habitually wears contact lenses, or intends to do so while driving, there should be sufficient evidence to indicate that he/she has good tolerance is well adapted to their use. The use of contact lenses should be noted on the record.

Ears. Note evidence of mastoid or middle ear disease, discharge, symptoms of aural vertigo, or Meniere's Syndrome. When recording hearing, record distance from patient at which a forced whispered voice can first be heard. If audiometer is used to test hearing, record decibel loss at 500 Hz, 1,000 Hz, and 2,000 Hz.

Throat. Note evidence of disease, irremediable deformities of the throat likely to interfere with eating or breathing, or any laryngeal condition which could interfere with the safe operation of a commercial motor vehicle.

Thorax-heart. Stethoscopic examination is required. Note murmurs and arrhythmias, and any past or present history of cardiovascular disease, of a variety known to be accompanied by syncope, dyspnea, collapse, enlarged heart, or congestive heart failures. Electrocardiogram is required when findings so indicate.

Blood pressure. Record with either spring or mercury column type of sphygomomanometer. If the blood pressure is consistently above 160/90 mm. Hg., further tests may be necessary to determine whether the driver is qualified to operate a commercial motor vehicle.

Lungs. If any lung disease is detected, state whether active or arrested; if arrested, your opinion as to how long it has been quiescent.

Gastrointestinal system. Note any diseases of the gastrointestinal system.

Abdomen. Note wounds, injuries, scars, or weakness of muscles of abdominal walls sufficient to interfere with normal function. Any hernia should be noted if present. State how long and if adequately contained by truss.

Abnormal masses. If present, note location, if tender, and whether or not applicant knows how long they have been present. If the diagnosis suggests that the condition might interfere with the control and safe operation of a commercial motor vehicle, more stringent tests must be made before the applicant can be certified.

Tenderness. When noted, state where most pronounced, and suspected cause. If the diagnosis suggests that the condition might interfere with the control and safe operation of a commercial motor vehicle, more stringent tests must be made before the applicant can be certified.

Genito-urinary. Urinalysis is required. Acute infections of the genito-urinary tract, as defined by local and State public health laws, indications from urinalysis of uncontrolled diabetes, symptomatic albumin-urea in the urine, or other findings indicative of health conditions likely to interfere with the control and safe operation of a commercial motor vehicle, will disqualify an applicant from operating a motor vehicle.

Neurological. If positive Romberg is reported, indicate degrees of impairment. Pupillary reflexes should be reported for both light and accommodation. Knee jerks are to be reported absent only when not obtainable upon reinforcement and as increased when foot is actually lifted from the floor following a light blow on the patella, sensory vibratory and positional abnormalities should be noted.

Extremities. Carefully examine upper and lower extremities. Record the loss of impairment of a leg, foot, toe, arm, hand, or fingers. Note any and all deformities, the presence of atrophy, semiparalysis or paralysis, or varicose veins. If a hand or finger deformity exists, determine whether sufficient grasp is present to enable the driver to secure and maintain a grip on the steering wheel. If a leg deformity exists, determine whether sufficient mobility and strength exist to enable the driver to operate pedals properly. Particular attention should be given to and a record should be made of, any impairment or structural defect which may interfere with the driver's ability to operate a commercial motor vehicle safely.

Spine. Note deformities, limitation of motion, or any history of pain, injuries, or disease, past or presently experienced in the cervical or lumbar spine region. If findings so dictate, radiologic and other examinations should be used to diagnose congenital or acquired defects; or spondylolisthesis and scoliosis.

Recto-genital studies. Diseases or conditions causing discomfort should be evaluated carefully to determine the extent to which the condition might be handicapping while lifting, pulling, or during periods of prolonged driving that might be necessary as part of the driver's duties.

Laboratory and other special findings. Urinalysis is required, as well as such other tests as the medical history or findings upon physical examination may indicate are necessary. A serological test is required if the applicant has a history of luetic infection or present physical findings indicate the possibility of latent syphilis. Other studies deemed advisable may be ordered by the examining medical examiner.

Diabetes. If insulin is necessary to control a diabetic condition, the driver is not qualified to operate a commercial motor vehicle. If mild diabetes is noted at the time of examination and it is stabilized by use of a hypoglycemic drug and a diet that can be obtained while the driver is on duty, it should

not be considered disqualifying. However, the driver must remain under adequate medical supervision.

The medical examiner must date and sign his/her findings upon completion of the examination.

EXAMINATION TO DETERMINE PHYSICAL CONDITION OF DRIVERS

Driver's name _____ ☐ New Certification
Address _____ ☐ Recertification
Social Security No. _____
Date of birth _____ Age ____

Yes	No	Health History
☐	☐	Head or spinal injuries.
☐	☐	Seizures, fits, convulsions, or fainting.
☐	☐	Extensive confinement by illness or injury.
☐	☐	Cardiovascular disease.
☐	☐	Tuberculosis.
☐	☐	Syphilis.
☐	☐	Gonorrhea.
☐	☐	Diabetes.
☐	☐	Gastrointestinal ulcer.
☐	☐	Nervous stomach.
☐	☐	Rheumatic fever.
☐	☐	Asthma.
☐	☐	Kidney disease.
☐	☐	Muscular disease.
☐	☐	Suffering from any other disease.
☐	☐	Permanent defect from illness, disease or injury.
☐	☐	Psychiatric disorder.
☐	☐	Any other nervous disorder.

If answer to any of the above is yes, explain:

PHYSICAL EXAMINATION

General appearance and development:
Good ____ Fair ____ Poor ____
Vision: For distance:
Right 20/ ____ Left 20/ ____
☐ Without corrective lenses.
☐ With corrective lenses if worn.
Evidence of disease or injury:
Right ____ Left ____
Color Test _____
Horizontal field of vision:
Right ____° Left ____°
Hearing:
Right ear ____ Left ear ____
Disease or injury _____
Audiometric Test (complete only if audiometer is used to test hearing) decibel loss as 500 Hz ____, at 1,000 Hz ____, at 2,000 Hz ____
Throat _____
Thorax:
Heart _____
If organic disease is present, is it fully compensated? _____
Blood pressure:
Systolic ____ Diastolic ____
Pulse: Before exercise _____
Immediately after exercise _____
Lungs _____
Abdomen:
Scars ____ Abnormal masses ____
Tenderness ____
Hernia: Yes ____ No ____
If so, where? _____
Is truss worn? _____
Gastrointestinal:
Ulceration or other disease:
Yes ____ No ____
Genito-Urinary:
Scars _____
Urethral discharge _____
Reflexes:
Romberg _____
Pupillary ____ Light R ____ L ____
Accommodation Right ____ Left ____
Knee Jerks:
Right:
Normal ____ Increased ____ Absent ____
Left:
Normal ____ Increased ____ Absent ____
Remarks _____
Extremities:
Upper _____
Lower _____
Spine _____
Laboratory and other Special Findings:
Urine: Spec. Gr. ____ Alb. ____
Sugar ____
Other laboratory data (Serology, etc.)
_____
Radiological data _____
Electrocardiograph _____
General comments _____

(Date of examination)

(Address of examining medical examiner)

(Name of examining medical examiner (Print))

(Title) (License or Certification No.) (State)

(Signature of examining medical examiner)

NOTE: This section to be completed only when visual test is conducted by a licensed ophthalmologist or optometrist.

(Date of examination)

(Address of ophthalmologist or optometrist)

(Name of ophthalmologist or optometrist (Print))

(Signature of ophthalmologist or optometrist)

(g) If the medical examiner finds that the person he/she examined is physically qualified to drive a commercial motor vehicle in accordance with

§391.41(b), he/she shall complete a certificate in the form prescribed in paragraph (g) of this section and furnish one copy to the person who was examined and one copy to the motor carrier that employs him/her.

(h) The medical examiner's certificate shall be in accordance with the following form. Existing forms may be used until current printed supplies are depleted or until March 31, 1997, provided that the medical examiner writes down in pen and ink any applicable information contained in the following form:

MEDICAL EXAMINER'S CERTIFICATE

I certify that I have examined

_____

(Driver's Name—Print)

In accordance with the Federal Motor Carrier Safety Regulations (49 CFR 391.41 through 391.49) and with knowledge of his/her duties, I find him/her qualified under the regulations.

—Qualified only when wearing corrective lenses

—Qualified only when wearing a hearing aid

—Qualified by operation of 49 CFR 391.64

—Medically unqualified unless accompanied by a _____ waiver

—Medically unqualified unless driving within an exempt intracity zone

A completed examination form for this person is on file in my office.

_____

Area Code & Telephone Number

_____

(License or Certificate No.)

_____

(State in Which Licensed)

_____

(Expiration Date)

_____

(Name & Title of Medical Examiner—Print)

_____

(Signature of Medical Examiner)

_____

(Signature of Driver)

_____

(Address of Driver)

[35 FR 6460, Apr. 22, 1970]

EDITORIAL NOTE: For FEDERAL REGISTER citations affecting §391.43, see the List of CFR Sections Affected in the Finding Aids section of this volume.

391.45 Persons who must be medically examined and certified.

Except as provided in §391.67, the following persons must be medically examined and certified in accordance with §391.43 as physically qualified to operate a commercial motor vehicle:

(a) Any person who has not been medically examined and certified as physically qualified to operate a commercial motor vehicle;

(b)(1) Any driver who has not been medically examined and certified as qualified to operate a commercial motor vehicle during the preceding 24 months; or

(2) Any driver authorized to operate a commercial motor vehicle only with an exempt intracity zone pursuant to §391.62, or only by operation of the exemption in §391.64, if such driver has not been medically examined and certified as qualified to drive in such zone during the preceding 12 months; and

(c) Any driver whose ability to perform his/her normal duties has been impaired by a physical or mental injury or disease.

[35 FR 6460, Apr. 22, 1970, as amended at 36 FR 223, Jan. 7, 1971; 54 FR 12202, Mar. 24, 1989; 61 FR 13347, Mar. 26, 1996]

§391.47 Resolution of conflicts of medical evaluation.

(a) *Applications.* Applications for determination of a driver's medical qualifications under standards in this part will only be accepted if they conform to the requirements of this section.

(b) *Content.* Applications will be accepted for consideration only if the following conditions are met.

(1) The application must contain the name and address of the driver, motor carrier, and all physicians involved in the proceeding.

(2) The applicant must submit proof that there is a disagreement between the physician for the driver and the physician for the motor carrier concerning the driver's qualifications.

(3) The applicant must submit a copy of an opinion and report including results of all tests of an impartial medical specialist in the field in which the medical conflict arose. The specialist should be one agreed to by the motor carrier and the driver.

(i) In cases where the driver refuses to agree on a specialist and the applicant is the motor carrier, the applicant must submit a statement of his/her agreement to submit the matter to an impartial medical specialist in the field, proof that he/she has requested the driver to submit to the medical specialist, and the response, if any, of the driver to his/her request.

(ii) In cases where the motor carrier refuses to agree on a medical specialist, the driver must submit an opinion and test results of an impartial medical specialist, proof that he/she has requested the motor carrier to agree to submit the matter to the medical specialist and the response, if any, of the motor carrier to his/her request.

(4) The applicant must include a statement explaining in detail why the decision of the medical specialist identified in paragraph (b)(3) of this section, is unacceptable.

(5) The applicant must submit proof that the medical specialist mentioned in paragraph (b)(3) of this section was provided, prior to his/her determination, the medical history of the driver and an agreed-upon statement of the work the driver performs.

(6) The applicant must submit the medical history and statement of work provided to the medical specialist under paragraph (b)(5) of this section.

(7) The applicant must submit all medical records and statements of the physicians who have given opinions on the driver's qualifications.

(8) The applicant must submit a description and a copy of all written and documentary evidence upon which the party making application relies in the form set out in 49 CFR 386.37.

(9) The application must be accompanied by a statement of the driver that he/she intends to drive in interstate commerce not subject to the commercial zone exemption or a statement of the carrier that he/she has used or intends to use the driver for such work.

(10) The applicant must submit three copies of the application and all records.

(c) *Information.* The Director, Office of Motor Carrier Research and Standards may request further information from the applicant if he/she determines that a decision cannot be made on the evidence submitted. If the applicant fails to submit the information requested, the Director may refuse to issue a determination.

(d)(1) *Action.* Upon receiving a satisfactory application the Director, Office of Motor Carrier Research and Standards shall notify the parties (the driver, motor carrier, or any other interested party) that the application has been accepted and that a determination will be made. A copy of all evidence received shall be attached to the notice.

(2) *Reply.* Any party may submit a reply to the notification within 15 days after service. Such reply must be accompanied by all evidence the party wants the Director, Office of Motor Carrier Research and Standards to consider in making his/her determination. Evidence submitted should include all medical records and test results upon which the party relies.

(3) *Parties.* A party for the purposes of this section includes the motor carrier and the driver, or anyone else submitting an application.

(e) *Petitions to review, burden of proof.* The driver or motor carrier may petition to review the Director's determination. Such petition must be submitted in accordance with § 386.13(a) of this chapter. The burden of proof in such a proceeding is on the petitioner.

(f) *Status of driver.* Once an application is submitted to the Director, Office of Motor Carrier Research and Standards, the driver shall be deemed disqualified until such time as the Director, Office of Motor Carrier Research and Standards makes a determination, or until the Director, Office of Motor Carrier Research and Standards orders otherwise.

(49 U.S.C. 304, 322; 18 U.S.C. 831–835; Pub. L. 93–633, 88 Stat. 8156 (49 U.S.C. 1801, *et seq.*); 49 CFR 1.48, 301.60)

[42 FR 18081, Apr. 5, 1977, as amended at 42 FR 53966, Oct. 4, 1977; 60 FR 38746, July 28, 1995]

§ 391.49 Waiver of certain physical defects.

(a) A person who is not physically qualified to drive under § 391.41(b) (1) or (2) and who is otherwise qualified to drive a commercial motor vehicle, may

drive a commercial motor vehicle, if the Regional Director of Motor Carriers has granted a waiver to that person.

(b) A letter of application for a waiver may be submitted jointly by the person who seeks a waiver of the physical disqualification (driver applicant) and by the motor carrier that will employ the driver applicant if the application is granted. The application must be addressed to the Regional Director of Motor Carriers for the region in which the coapplicant motor carrier's principal place of business is located. The address for each regional office is listed in § 390.27 of this subchapter. *Exception.* A letter of application for a waiver may be submitted unilaterally by a driver applicant. The application must be addressed to the Regional Director of Motor Carriers for the region in which the driver has legal residence. The address of each regional office is listed in § 390.27 of this subchapter. The driver applicant must comply with all the requirements of paragraph (c) of this section except paragraphs (c)(1) (i) and (iii). The driver applicant shall respond to the requirements of paragraph (c)(2) (i) to (v) of this section, if the information is known.

(c) A letter of application for a waiver shall contain—

(1) Identification of the applicant(s):

(i) Name and complete address of the motor carrier coapplicant;

(ii) Name and complete address of the driver applicant;

(iii) The Federal Highway Administration Motor Carrier Identification Number, if known; and

(iv) A description of the driver applicant's limb impairment for which waiver is requested.

(2) Description of the type of operation the driver will be employed to perform:

(i) State(s) in which the driver will operate for the motor carrier coapplicant (if more than 10 States, designate general geographic area only);

(ii) Average period of time the driver will be driving and/or on duty, per day;

(iii) Type of commodities or cargo to be transported;

(iv) Type of driver operation (i.e. sleeper-team, relay, owner operator, etc.); and

(v) Number of years experience operating the type of commercial motor vehicle(s) requested in the letter of application and total years of experience operating all types of motor vehicles.

(3) Description of the commercial motor vehicle(s) the driver applicant intends to drive:

(i) Truck, truck-tractor, or bus make, model, and year (if known);

(ii) Drive train;

(A) Transmission type (automatic or manual—if manual, designate number of forward speeds);

(B) Auxiliary transmission (if any) and number of forward speeds; and

(C) Rear axle (designate single speed, 2 speed, or 3 speed).

(iii) Type of brake system;

(iv) Steering, manual or power assisted;

(v) Description of type of trailer(s) (i.e., van, flat bed, cargo tank, drop frame, lowboy, or pole);

(vi) Number of semitrailers or full trailers to be towed at one time;

(vii) For commercial motor vehicles designed to transport passengers, indicate the seating capacity of the commercial motor vehicle; and

(viii) Description of any modification(s) made to the commercial motor vehicle for the driver applicant; attach photograph(s) where applicable.

(4) Otherwise qualified:

(i) The coapplicant motor carrier must certify that the driver applicant is otherwise qualified under the regulations of this part;

(ii) In the case of a unilateral application, the driver applicant must certify that (s)he is otherwise qualified under the regulations of this part.

(5) Signature of applicant(s):

(i) Driver applicant's signature and date signed;

(ii) Motor carrier official's signature (if application has a coapplicant), title, and date signed. Dependent upon the motor carrier's organizational structure (corporation, partnership, or proprietorship), this signer of the application shall be an officer, partner, or the proprietor.

(d) The letter of application for a waiver shall be accompanied by:

(1) A copy of the results of the medical examination performed pursuant to § 391.43;

(2) A copy of the medical certificate completed pursuant to § 391.43(e);

(3) A medical evaluation summary completed by either a board qualified or board certified physiatrist (doctor of physical medicine) or orthopedic surgeon;

NOTE: The coapplicant motor carrier or the driver applicant shall provide the physiatrist or orthopedic surgeon with a description of the job tasks the driver applicant will be required to perform.

(i) The medical evaluation summary for a driver applicant disqualified under § 391.41(b)(1) shall include:

(A) An assessment of the functional capabilities of the driver as they relate to the ability of the driver to perform normal tasks associated with operating a commercial motor vehicle, and

(B) A statement by the examiner that the applicant is capable of demonstrating precision prehension (e.g., manipulating knobs and switches) and power grasp prehension (e.g., holding and maneuvering the steering wheel) with each upper limb separately. This requirement does not apply to an individual who was granted a waiver, absent a prosthetic device, prior to the publication of this amendment.

(ii) The medical evaluation summary for a driver applicant disqualified under § 391.41(b)(2) shall include:

(A) An explanation as to how and why the impairment interferes with the ability of the applicant to perform normal tasks associated with operating a commercial motor vehicle;

(B) An assessment and medical opinion of whether the condition will likely remain medically stable over the lifetime of the driver applicant; and

(C) A statement by the examiner that the applicant is capable of demonstrating precision prehension (e.g., manipulating knobs and switches) and power grasp prehension (e.g., holding and maneuvering the steering wheel) with each upper limb separately. This requirement does not apply to an individual who was granted a waiver, absent an orthotic device, prior to the publication of this amendment.

(4) A description of the driver applicant's prosthetic or orthotic device worn, if any, by the driver applicant;

(5) Road test:

(i) A copy of the driver applicant's road test administered by the motor carrier coapplicant and the certificate issued pursuant to § 391.31 (b) through (g); or

(ii) A unilateral applicant shall be responsible for having a road test administered by a motor carrier or a person who is competent to administer the test and evaluate its results.

(6) Application for employment:

(i) A copy of the driver applicant's application for employment completed pursuant to § 391.21; or

(ii) A unilateral applicant shall be responsible for submitting a copy of the last commercial driving position's employment application s/he held. If not previously employed as a commercial driver, so state.

(7) A copy of the driver applicant's waiver of certain physical defects issued by the individual State(s), where applicable; and

(8) A copy of the driver applicant's State Motor Vehicle Driving Record for the past 3 years from each State in which a motor vehicle driver's license or permit has been obtained.

(e) *Agreement*. A motor carrier that employs a driver with a waiver agrees to:

(1) File promptly (within 30 days) with the Regional Director of Motor Carriers such documents and information as may be required about driving activities, accidents, arrests, license suspensions, revocations, or withdrawals, and convictions which involve the driver applicant. This applies whether the driver's waiver is a unilateral one or has a coapplicant motor carrier;

(i) A motor carrier who is a coapplicant must file the required documents with the Regional Director of Motor Carriers for the region in which the carrrier's principal place of business is located; or

(ii) A motor carrier who employs a driver who has been issued a unilateral waiver must file the required documents with the Regional Director of Motor Carriers for the region in which the driver has legal residence.

(2) Evaluate the driver with a road test using the trailer the motor carrier intends the driver to transport or, in lieu of, accept a certificate of a trailer road test from another motor carrier if

the trailer type(s) is similar or accept the trailer road test done during the Skill Performance Evaluation if it is a similar trailer type(s) to that of the prospective motor carrier;

NOTE: Job tasks, as stated in paragraph (e)(3) of this section, are not evaluated in the Skill Performance Evalulation.

(3) Evaluate the driver for those nondriving safety-related job tasks associated with whatever type of trailer(s) will be used and any other nondriving safety-related or job-related tasks unique to the operations of the employing motor carrier; and

(4) Use the driver to operate the type of commercial motor vehicle defined in the waiver only when the driver is in compliance with the conditions and limitations of the waiver.

(f) The driver shall supply each employing motor carrier with a copy of the waiver.

(g) The Regional Director of Motor Carriers may require the driver applicant to demonstrate his or her ability to to safely operate the commercial motor vehicle(s) the driver intends to drive to an agent of the Regional Director of Motor Carriers. The waiver form will identify the power unit (bus, truck, truck-tractor) for which the waiver has been granted. The waiver forms will also identify the trailer type used in the Skill Performance Evaluation; however, the waiver is not limited to that specific trailer type. A driver may use the waiver with other trailer types if a successful trailer road test is completed in accordance with paragraph (e)(2) of this section. Job tasks, as stated in paragraph (e)(3) of this section, are not evaluated during the Skill Performance Evaluation.

(h) The Regional Director of Motor Carriers may deny the application for waiver or may grant it totally or in part and issue the waiver subject to such terms, conditions, and limitations as deemed consistent with the public interest. A waiver is valid for a period not to exceed 2 years from date of issue, and may be renewed 30 days prior to the expiration date.

(i) The waiver renewal application shall be submitted to the Regional Director of Motor Carriers for the region in which the driver has legal residence, if the waiver was issued unilaterally. If the waiver has a coapplicant, then the renewal application is submitted to the Regional Director of Motor Carriers for the region in which the coapplicant motor carrier's principal place of business is located. The waiver renewal application shall contain the following:

(1) Name and complete address of motor carrier currently employing the applicant;

(2) Name and complete address of the driver;

(3) Effective date of the current waiver;

(4) Expiration date of the current waiver;

(5) Total miles driven under the current waiver;

(6) Number of accidents incurred while driving under the current waiver, including date of the accident(s), number of fatalities, number of injuries, and the estimated dollar amount of property damage;

(7) A current medical examination report;

(8) A medical evaluation summary pursuant to paragraph (d)(3) of this section if an unstable medical condition exists. All handicapped conditions classified under § 391.41(b)(1) are considered unstable.

NOTE: Refer to paragraph (d)(3)(ii) of this section for the condition under § 391.41(b)(2) which may be considered medically stable.

(9) A copy of driver's current State motor vehicle driving record for the period of time the current waiver has been in effect;

(10) Notification of any change in the type of tractor the driver will operate;

(11) Driver's signature and date signed; and

(12) Motor carrier coapplicant's signature and date signed.

(j) Upon granting a waiver, the Regional Director of Motor Carriers will notify the driver applicant and coapplicant motor carrier (if applicable) by letter. The terms, conditions, and limitations of the waiver will be set forth. A motor carrier shall maintain a copy of the waiver in its driver qualification file. A copy of the waiver shall be retained in the motor carrier's file for a period of 3 years after the driver's employment is terminated. The driver applicant shall have the waiver (or a

legible copy) in his/her possession whenever on duty.

(k) The Regional Director of Motor Carriers may revoke a waiver after the person to whom it was issued is given notice of the proposed revocation and has been allowed a reasonable opportunity to appeal.

(l) Falsifying information in the letter of application, the renewal application, or falsifying information required by this section by either the applicant or motor carrier is prohibited.

(Approved by the Office of Management and Budget under control number 2125–0080)

[48 FR 38487, Aug. 24, 1983, as amended at 49 FR 38293, Sept. 28, 1984; 50 FR 49851, Dec. 5, 1985; 51 FR 12621, Apr. 14, 1986; 60 FR 38745, 38746, July 28, 1995; 61 FR 1843, Jan. 24, 1996]

Subpart F—Files and Records

§ 391.51 Driver qualification files.

(a) Except as provided in subpart G, each motor carrier shall maintain a driver qualification file for each driver it employs. A driver's qualification file may be combined with the driver's personnel file.

(b) The qualification file for a driver who has been a regularly employed driver of the motor carrier for a continuous period which began before January 1, 1971, must include:

(1) The medical examiner's certificate of his/her physical qualification to drive a commercial motor vehicle or a legible photographic copy of the certificate;

(2) The letter from the Regional Director of Motor Carriers granting a waiver of a physical disqualification, if a waiver was issued under § 391.49;

(3) The note relating to the annual review of his/her driving record required by § 391.25;

(4) The list or certificate relating to violations of motor vehicle laws and ordinances required by § 391.27; and

(5) Any other matter which relates to the driver's qualifications or ability to drive a commercial motor vehicle safely.

(c) The qualification file for a regularly employed driver who has not been regularly employed by the motor carrier for a continuous period which began before January 1, 1971, must include:

(1) The documents specified in paragraph (b) of this section;

(2) The driver's application for employment completed in accordance with § 391.21;

(3) The responses of State agencies and past employers to the motor carrier's inquiries concerning the driver's driving record and employment pursuant to § 391.23; and

(4) The certificate of driver's road test issued to the driver pursuant to § 391.31 (e), or a copy of the license or certificate which the motor carrier accepted as equivalent to the driver's road test pursuant to § 391.33.

(d) The qualification file for an intermittent, casual, or occasional driver employed under the rules in § 391.63 must include—

(1) The medical examiner's certificate of his/her physical qualification to drive a commercial motor vehicle or a legible photographic copy of the certificate;

(2) The certificate of driver's road test issued to the driver pursuant to § 391.31(e), or a copy of the license or certificate which the motor carrier accepted as equivalent to the driver's road test pursuant to § 391.31; and

(3) The driver's name, his/her social security number, and the identification number, type, and issuing State of his/her commercial motor vehicle operator's license.

(e) A using carrier's qualification file for a driver who is regularly employed by another motor carrier, and who is employed by the using carrier in accordance with § 391.65 of this part, shall include a copy of a certificate, as prescribed by § 391.65(a)(2) of this part, by the regularly employing carrier that the driver is fully qualified to drive a commercial motor vehicle.

(f) Except as provided in paragraphs (g) and (h) of this section, each driver's qualification file shall be kept at the motor carrier's principal place of business for as long as a driver is employed by that motor carrier and for 3 years thereafter.

(g) Upon a written request to, and with the approval of, the Regional Director of Motor Carriers for the region in which a motor carrier has his/her

principal place of business, the carrier may retain one or more of its drivers' qualification files at a regional or terminal office. The addresses and jurisdictions of the Regional Director of Motor Carriers are shown in §390.27 of this subchapter.

(h) The following records may be removed from a driver's qualification file after 3 years from date of execution:

(1) The medical examiner's certificate of his/her physical qualification to drive a commercial motor vehicle or the photographic copy of the certificate as required by §391.43(d).

(2) The note relating to the annual review of his/her driving record as required by §391.25.

(3) The list or certificate relating to violations of motor vehicle laws and ordinance as required by §391.27.

(4) The letter issued under §391.49 granting a waiver of a physical disqualification.

(Sec. 204, Interstate Commerce Act, as amended, (49 U.S.C. 304); sec. 6, Department of Transportation Act (49 U.S.C. 1655), and the delegations of authority by the Secretary of Transportation and the Federal Highway Administrator at 49 CFR 1.48 and 301.60, respectively)

[35 FR 6460, Apr. 22, 1970, as amended at 35 FR 17420, Nov. 13, 1970; 41 FR 36656, Aug. 31, 1976; 42 FR 37370, July 21, 1977; 45 FR 46424, July 10, 1980; 53 FR 18057, May 19, 1988; 59 FR 8752, Feb. 23, 1994; 59 FR 60323, Nov. 23, 1994; 60 FR 38745, July 28, 1995]

Subpart G—Limited Exemptions

§391.61 Drivers who were regularly employed before January 1, 1971.

The provisions of §391.21 (relating to applications for employment), §391.23 (relating to investigations and inquiries), and §391.31 (relating to road tests) do not apply to a driver who has been a regularly employed driver (as defined in §390.5 of this subchapter) of a motor carrier for a continuous period which began before January 1, 1971, as long as he/she continues to be a regularly employed driver of that motor carrier. Such a driver is qualified to drive a commercial motor vehicle if he/she fulfills the requirements of paragraphs (b)(1) through (b)(9) of §391.11 (relating to qualifications of drivers).

[59 FR 60323, Nov. 23, 1994, as amended at 60 FR 38745, July 28, 1995]

§391.62 Limited exemptions for intracity zone drivers.

The provisions of §§391.11(b)(1) and 391.41(b)(1) through (b)(11) do not apply to a person who:

(a) Was otherwise qualified to operate and operated a commercial motor vehicle in a municipality or exempt intracity zone thereof throughout the one-year period ending November 18, 1988;

(b) Meets all the other requirements of this section;

(c) Operates wholly within the exempt intracity zone (as defined in 49 CFR 390.5);

(d) Does not operate a vehicle used in the transportation of hazardous materials in a quantity requiring placarding under regulations issued by the Secretary under 49 U.S.C. chapter 51.; and

(e) Has a medical or physical condition which:

(1) Would have prevented such person from operating a commercial motor vehicle under the Federal Motor Carrier Safety Regulations contained in this subchapter;

(2) Existed on July 1, 1988, or at the time of the first required physical examination after that date; and

(3) The examining physician has determined this condition has not substantially worsened since July 1, 1988, or at the time of the first required physical examination after that date.

[61 FR 13346, Mar. 26, 1996; 61 FR 17253, Apr. 19, 1996]

§391.63 Intermittent, casual, or occasional drivers.

(a) If a motor carrier employs a person who is not a regularly employed driver (as defined in §390.5 of this subchapter) to drive a commercial motor vehicle for a single trip or on an intermittent, casual, or occasional basis, the motor carrier shall comply with all requirements of this part, except that the motor carrier need not—

(1) Require the person to furnish an application for employment in accordance with §391.21;

(2) Make the investigations and inquiries specified in § 391.23 with respect to that person,

(3) Perform the annual review of the person's driving record required by § 391.25; or

(4) Require the person to furnish a record of violations or a certificate in accordance with § 391.27.

(b) Before a motor carrier permits a person described in paragraph (a) of this section to drive a commercial motor vehicle, the motor carrier must obtain his/her name, his/her social security number, and the identification number, type and issuing State of his/her commercial motor vehicle operator's license. The motor carrier must retain that information in its files for 3 years after the person's employment by the motor carrier ceases.

[35 FR 6460, Apr. 22, 1970, as amended at 53 FR 18057, May 19, 1988; 60 FR 38745, July 28, 1995]

§ 391.64 Grandfathering for certain drivers participating in vision and diabetes waiver study programs.

(a) The provisions of § 391.41(b)(3) do not apply to a driver who was a participant in good standing on March 31, 1996, in a waiver study program concerning the operation of commercial motor vehicles by insulin-controlled diabetic drivers; *provided:*

(1) The driver is physically examined every year, including an examination by a board-certified/eligible endocrinologist attesting to the fact that the driver is:

(i) Otherwise qualified under § 391.41;

(ii) Free of insulin reactions (an individual is free of insulin reactions if that individual does not have severe hypoglycemia or hypoglycemia unawareness, and has less than one documented, symptomatic hypoglycemic reaction per month);

(iii) Able to and has demonstrated willingness to properly monitor and manage his/her diabetes; and

(iv) Not likely to suffer any diminution in driving ability due to his/her diabetic condition.

(2) The driver agrees to and complies with the following conditions:

(i) A source of rapidly absorbable glucose shalll be carried at all times while driving;

(ii) Blood glucose levels shall be self-monitored one hour prior to driving and at least once every four hours while driving or on duty prior to driving using a portable glucose monitoring device equipped with a computerized memory;

(iii) Submit blood glucose logs to the endocrinologist or medical examiner at the annual examination or when otherwise directed by an authorized agent of the FHWA;

(iv) Provide a copy of the endocrinologist's report to the medical examiner at the time of the annual medical examination; and

(v) Provide a copy of the annual medical certification to the employer for retention in the driver's qualification file and retain a copy of the certification on his/her person while driving for presentation to a duly authorized Federal, State or local enforcement official.

(b) The provisions of § 391.41(b)(10) do not apply to a driver who was a participant in good standing on March 31, 1996, in a waiver study program concerning the operation of commercial motor vehicles by drivers with visual impairment in one eye; *provided:*

(1) The driver is physically examined every year, including an examination by an ophthalmologist or optometrist attesting to the fact that the driver:

(i) Is otherwise qualified under § 391.41; and

(ii) Continues to measure at least 20/40 (Snellen) in the better eye.

(2) The driver provides a copy of the ophthalmologist or optometrist report to the medical examiner at the time of the annual medical examination.

(3) The driver provides a copy of the annual medical certification to the employer for retention in the driver's qualification file and retains a copy of the certification on his/her person while driving for presentation to a duly authorized federal, state or local enforcement official.

[61 FR 13346, Mar. 26, 1996]

§ 391.65 Drivers furnished by other motor carriers.

(a) A motor carrier may employ a driver who is not a regularly employed driver of that motor carrier without

complying with the generally applicable driver qualification file requirements in this part, if—

(1) The driver is regularly employed by another motor carrier; and

(2) The motor carrier which regularly employs the driver certifies that the driver is fully qualified to drive a commercial motor vehicle in a written statement which—

(i) Is signed and dated by an officer or authorized employee of the regularly employing carrier;

(ii) Contains the driver's name and signature;

(iii) Certifies that the driver has been regularly employed as defined in §390.5;

(iv) Certifies that the driver is fully qualified to drive a commercial motor vehicle under the rules in part 391 of the Federal Motor Carrier Safety Regulations;

(v) States the expiration date of the driver's medical examiner's certificate;

(vi) Specifies an expiration date for the certificate, which shall be not longer than 2 years or, if earlier, the expiration date of the driver's current medical examiner's certificate; and

(vii) After April 1, 1977, is substantially in accordance with the following form:

(Name of driver)

_____

(SS No.)

(Signature of driver)

I certify that the above named driver, as defined in §391.3(c) is regularly driving a commercial motor vehicle operated by the below named carrier and is fully qualified under part 391, Federal Motor Carrier Safety Regulations. His/her current medical examiner's certificate expires on _____ (Date)
This certificate expires:

(Date not later than expiration date of medical certificate)

Issued on _____ (date)

Issued by _____
(Name of carrier)

(Address)

(Signature)

(Title)

(b) A motor carrier that obtains a certificate in accordance with paragraph (a) (2) of this section shall retain a copy of that certificate in its files for 3 years.

(c) A carrier which certifies a driver's qualifications under this section shall—

(1) Be responsible for the accuracy of the certificate; and

(2) Recall the unexpired certificate carried by a driver immediately upon learning that the driver is no longer qualified under the rules in this part.

[41 FR 36656, Aug. 31, 1976, as amended at 53 FR 18057, May 19, 1988; 60 FR 38745, July 28, 1995]

§391.67 Farm vehicle drivers of articulated commercial motor vehicles.

The following rules in this part do not apply to a farm vehicle driver (as defined in §390.5) who is 18 years of age or older and who drives an articulated commercial motor vehicle:

(a) Section 391.11(b)(1), (b)(8), (b)(10), and (b)(11) (relating to driver qualifications in general);

(b) Subpart C (relating to disclosure of, investigation into, and inquiries about the background, character, and driving record of, drivers);

(c) Subpart D (relating to road tests);

(d) Subpart F (relating to maintenance of files and records).

[59 FR 60324, Nov. 23, 1994, as amended at 60 FR 38745, 38746, July 28, 1995]

§391.68 Private motor carrier of passengers (nonbusiness).

The following rules in this part do not apply to a private motor carrier of passengers (nonbusiness) and their drivers:

(a) Section 391.11 (b)(8), (b)(10), and (b)(11), (relating to driver qualifications in general).

(b) Subpart C (relating to disclosure of, investigation into, and inquiries about the background, character, and driving record of, drivers).

(c) Subpart D (relating to road tests).

(d) So much of §§391.41 and 391.45 as require a driver to be medically examined and to have a medical examiner's certificate on his/her person.

(e) Subpart F (relating to maintenance of files and records).

(f) Subpart H (relating to controlled substances testing).

[60 FR 38746, July 28, 1995]

§ 391.69 Drivers operating in Hawaii.

The provisions of § 391.21 (relating to application for employment), § 391.23 (relating to investigations and inquiries), and § 391.31 (relating to road tests) do not apply to a driver who has been a regularly employed driver (as defined in § 390.5 of this subchapter) of a motor carrier operating in the State of Hawaii for a continuous period which began before April 1, 1975, as long as he/she continues to be a regularly employed driver of that motor carrier. Such a driver is qualified to drive a commercial motor vehicle if he/she fulfills the requirements of paragraphs (b)(1) through (b)(9) of § 391.11 (relating to qualifications of drivers).

[59 FR 60324, Nov. 23, 1994, as amended at 60 FR 38745, July 28, 1995]

§ 391.71 Intrastate drivers of commercial motor vehicles transporting Class 3 combustible liquids.

(a) The provisions of § 391.11(b)(1) (relating to minimum age), § 391.21 (relating to application for employment), § 391.23 (relating to investigations and inquiries), and § 391.31 (relating to road test) do not apply to a driver who is otherwise qualified and was a regularly employed driver (as defined in § 390.5 of the subchapter) as of July 1, 1975, and continues to be a regularly employed driver of that motor carrier and who drives a commercial motor vehicle that:

(1) Is transporting Class 3 combustible liquids (as defined in § 173.120 of this title), and

(2) Is being operated in intrastate commerce.

(b) In addition to the exemptions provided in paragraph (a) of this section, the provisions of § 391.41(b) (10) (relating to minimum visual requirements), do not apply to a driver who was a regularly employed driver (as defined in § 390.5 of this subchapter) as of July 1, 1975, and continues to be a regularly employed driver of that motor carrier and who drives a commercial motor vehicle that:

(1) Is a truck (as defined in § 390.5 of this subchapter), and

(2) Is operated in retail delivery service, and

(3) Is transporting a Class 3 combustible liquid (as defined in § 173.120 of this title), and

(4) Is operated in intrastate commerce.

[40 FR 54796, Nov. 26, 1975; 40 FR 58858, Dec. 19, 1975, as amended at 53 FR 18057, May 19, 1988; 59 FR 60324, Nov. 23, 1994; 59 FR 63924, Dec. 12, 1994; 60 FR 38745, 38746, July 28, 1995]

§ 391.73 Private motor carrier of passengers (business).

The provisions of § 391.21 (relating to applications for employment), § 391.23 (relating to investigations and inquiries), and § 391.31 (relating to road tests) do not apply to a driver who has been a regularly employed driver (as defined in § 390.5 of this subchapter) of a private motor carrier of passengers (business) as of July 1, 1994, so long as the driver continues to be a regularly employed driver of that motor carrier. Such a driver is qualified to drive a commercial motor vehicle if that driver fulfills the requirements of paragraphs (b)(1) through (b)(9) of § 391.11 (relating to qualifications of drivers).

[59 FR 60324, Nov. 23, 1994, as amended at 60 FR 38745, July 28, 1995]

PART 392—DRIVING OF COMMERCIAL MOTOR VEHICLES

Subpart A—General

Sec.
392.1 Scope of the rules in this part.
392.2 Applicable operating rules.
392.3 Ill or fatigued operator.
392.4 Drugs and other substances.
392.5 Alcohol prohibition.
392.6 Schedules to conform with speed limits.
392.7 Equipment, inspection and use.
392.8 Emergency equipment, inspection, and use.
392.9 Safe loading.
392.9a [Reserved]
392.9b Hearing aid to be worn.

Subpart B—Driving of Commercial Motor Vehicles

392.10 Railroad grade crossings; stopping required.

392.11 Railroad grade crossings; slowing down required.
392.12 [Reserved]
392.13 Drawbridges; slowing down of commercial motor vehicles.
392.14 Hazardous conditions; extreme caution.
392.15 Required and prohibited use of turn signals.
392.16 Use of seat belts.
392.18 [Reserved]

Subpart C—Stopped Commercial Motor Vehicles

392.20 Unattended commercial motor vehicles; precautions.
392.21 [Reserved]
392.22 Emergency signals; stopped commercial motor vehicles.
392.24 Emergency signals; flame-producing.
392.25 Emergency signals; dangerous cargoes.

Subpart D—Use of Lighted Lamps and Reflectors

392.30—392.32 [Reserved]
392.33 Obscured lamps or reflectors.

Subpart E—License Revocation; Duties of Driver

392.40—392.41 [Reserved]
392.42 Notification of license revocation.

Subpart F—Fueling Precautions

392.50 Ignition of fuel; prevention.
392.51 Reserve fuel.
392.52 Buses; fueling.

Subpart G—Prohibited Practices

392.60 Unauthorized persons not to be transported.
392.61—392.62 [Reserved]
392.63 Towing or pushing loaded buses.
392.64 Riding within closed commercial motor vehicles without proper exits.
392.65 [Reserved]
392.66 Carbon monoxide; use of commercial motor vehicle when detected.
392.67 Heater, flame-producing; on commercial motor vehicle in motion.
392.68 Motive power not to be disengaged.
392.69 [Reserved]
392.71 Radar detectors; use and/or possession.

AUTHORITY: 49 U.S.C. 31136, 31502; 49 U.S.C. 1.48.

SOURCE: 33 FR 19732, Dec. 25, 1968, unless otherwise noted.

Subpart A—General

§392.1 Scope of the rules in this part.

Every motor carrier, its officers, agents, representatives, and employees responsible for the management, maintenance, operation, or driving of commercial motor vehicles, or the hiring, supervising, training, assigning, or dispatching of drivers, shall be instructed in and comply with the rules in this part.

[53 FR 18057, May 19, 1988, as amended at 60 FR 38746, July 28, 1995]

§392.2 Applicable operating rules.

Every commercial motor vehicle must be operated in accordance with the laws, ordinances, and regulations of the jurisdiction in which it is being operated. However, if a regulation of the Federal Highway Administration imposes a higher standard of care than that law, ordinance or regulation, the Federal Highway Administration regulation must be complied with.

[35 FR 7800, May 21, 1970, as amended at 60 FR 38746, July 28, 1995]

§392.3 Ill or fatigued operator.

No driver shall operate a commercial motor vehicle, and a motor carrier shall not require or permit a driver to operate a commercial motor vehicle, while the driver's ability or alertness is so impaired, or so likely to become impaired, through fatigue, illness, or any other cause, as to make it unsafe for him/her to begin or continue to operate the commercial motor vehicle. However, in a case of grave emergency where the hazard to occupants of the commercial motor vehicle or other users of the highway would be increased by compliance with this section, the driver may continue to operate the commercial motor vehicle to the nearest place at which that hazard is removed.

[35 FR 7800, May 21, 1970, as amended at 60 FR 38746, July 28, 1995]

§392.4 Drugs and other substances.

(a) No driver shall be on duty and possess, be under the influence of, or use, any of the following drugs or other substances:

(1) Any 21 CFR 1308.11 *Schedule I* substance;

(2) An amphetamine or any formulation thereof (including, but not limited, to ''pep pills,'' and ''bennies'');

(3) A narcotic drug or any derivative thereof; or

(4) Any other substance, to a degree which renders the driver incapable of safely operating a motor vehicle.

(b) No motor carrier shall require or permit a driver to violate paragraph (a) of this section.

(c) Paragraphs (a) (2), (3), and (4) do not apply to the possession or use of a substance administered to a driver by or under the instructions of a licensed medical practitioner, as defined in § 382.107 of this subchapter, who has advised the driver that the substance will not affect the driver's ability to safely operate a motor vehicle.

(d) As used in this section, ''possession'' does not include possession of a substance which is manifested and transported as part of a shipment.

[61 FR 9567, Mar. 8, 1996, as amended at 62 FR 37153, July 11, 1997]

§ 392.5 Alcohol prohibition.

(a) No driver shall—

(1) Use alcohol, as defined in § 382.107 of this subchapter, or be under the influence of alcohol, within 4 hours before going on duty or operating, or having physical control of, a commercial motor vehicle; or

(2) Use alcohol, be under the influence of alcohol, or have any measured alcohol concentration or detected presence of alcohol, while on duty, or operating, or in physical control of a commercial motor vehicle; or

(3) Be on duty or operate a commercial motor vehicle while the driver possesses wine of not less than one-half of one per centum of alcohol by volume, beer *as defined in 26 U.S.C. 5052(a), of the Internal Revenue Code of 1954,* and distilled spirits *as defined in section 5002(a)(8), of such Code.* However, this does not apply to possession of wine, beer, or distilled spirits which are:

(i) Manifested and transported as part of a shipment; or

(ii) Possessed or used by bus passengers.

(b) No motor carrier shall require or permit a driver to—

(1) Violate any provision of paragraph (a) of this section; or

(2) Be on duty or operate a commercial motor vehicle if, by the driver's general appearance or conduct or by other substantiating evidence, the driver appears to have used alcohol within the preceding four hours.

(c) Any driver who is found to be in violation of the provisons of paragraph (a) or (b) of this section shall be placed out-of-service immediately for a period of 24 hours.

(1) The 24-hour out-of-service period will commence upon issuance of an out-of-service order.

(2) No driver shall violate the terms of an out-of-service order issued under this section.

(d) Any driver who is issued an out-of-service order under this section shall:

(1) Report such issuance to his/her employer within 24 hours; and

(2) Report such issuance to a State official, designated by the State which issued his/her driver's license, within 30 days unless the driver chooses to request a review of the order. In this case, the driver shall report the order to the State official within 30 days of an affirmation of the order by either the Regional Director of Motor Carriers for the Region or the Associate Administrator.

(e) Any driver who is subject to an out-of-service order under this section may petition for review of that order by submitting a petition for review in writing within 10 days of the issuance of the order to the Regional Director of Motor Carriers for the Region in which the order was issued. The Regional Director of Motor Carriers may affirm or reverse the order. Any driver adversely affected by such order of the Regional Director of Motor Carriers may petition the Associate Administrator for review in accordance with 49 CFR 386.13.

(49 U.S.C. 304, 1655; 49 CFR 1.48(b) and 301.60)

[47 FR 47837, Oct. 28, 1982, as amended at 52 FR 27201, July 20, 1987; 59 FR 7515, Feb. 15, 1994; 61 FR 9567, Mar. 8, 1996]

§ 392.6 Schedules to conform with speed limits.

No motor carrier shall schedule a run nor permit nor require the operation of

any commercial motor vehicle between points in such period of time as would necessitate the commercial motor vehicle being operated at speeds greater than those prescribed by the jurisdictions in or through which the commercial motor vehicle is being operated.

[33 FR 19732, Dec. 25, 1968, as amended at 60 FR 38746, July 28, 1995]

§392.7 Equipment, inspection and use.

No commercial motor vehicle shall be driven unless the driver thereof shall have satisfied himself/herself that the following parts and accessories are in good working order, nor shall any driver fail to use or make use of such parts and accessories when and as needed:

Service brakes, including trailer brake connections.
Parking (hand) brake.
Steering mechanism.
Lighting devices and reflectors.
Tires.
Horn.
Windshield wiper or wipers.
Rear-vision mirror or mirrors.
Coupling devices.

[33 FR 19732, Dec. 25, 1968, as amended at 60 FR 38746, July 28, 1995]

§392.8 Emergency equipment, inspection and use.

No commercial motor vehicle shall be driven unless the driver thereof is satisfied that the emergency equipment required by §393.95 of this subchapter is in place and ready for use; nor shall any driver fail to use or make use of such equipment when and as needed.

[49 FR 38290, Sept. 28, 1984, as amended at 60 FR 38746, July 28, 1995]

§392.9 Safe loading.

(a) *General.* No person shall drive a commercial motor vehicle and a motor carrier shall not require or permit a person to drive a commercial motor vehicle unless—

(1) The commercial motor vehicle's cargo is properly distributed and adequately secured as specified in §§393.100–393.106 of this subchapter.

(2) The commercial motor vehicle's tailgate, tailboard, doors, tarpaulins, its spare tire and other equipment used in its operation, and the means of fastening the commercial motor vehicle's cargo are secured; and

(3) The commercial motor vehicle's cargo or any other object does not obscure the driver's view ahead or to the right or left sides, interfere with the free movement of his/her arms or legs, prevent his/her free and ready access to accessories required for emergencies, or prevent the free and ready exit of any person from the commercial motor vehicle's cab or driver's compartment.

(b) *Drivers of trucks and truck tractors.* Except as provided in paragraph (b)(4) of this section, the driver of a truck or truck tractor must—

(1) Assure himself/herself that the provisions of paragraph (a) of this section have been complied with before he/she drives that commercial motor vehicle;

(2) Examine the commercial motor vehicle's cargo and its load-securing devices within the first 25 miles after beginning a trip and cause any adjustments to be made to the cargo or load-securing devices (other than steel strapping) as may be necessary to maintain the security of the commercial motor vehicle's load; and

(3) Reexamine the commercial motor vehicle's cargo and its load-securing devices periodically during the course of transportation and cause any adjustments to be made to the cargo or load-securing devices (other than steel strapping) as may be necessary to maintain the security of the commercial motor vehicle's load. A periodic reexamination and any necessary adjustments must be made—

(i) When the driver makes a change of his/her duty status; or

(ii) After the commercial motor vehicle has been driven for 3 hours; or

(iii) After the commercial motor vehicle has been driven for 150 miles, whichever occurs first.

(4) The rules in this paragraph do not apply to the driver of a sealed commercial motor vehicle who has been ordered not to open it to inspect its cargo or to the driver of a commercial motor vehicle that has been loaded in a manner that makes inspection of its cargo impracticable.

(c) *Buses.* No person shall drive a bus and a motor carrier shall not require or permit a person to drive a bus unless—

(1) All standees on the bus are rearward of the standee line or other means prescribed in § 393.90 of this subchapter;

(2) All aisle seats in the bus conform to the requirements of § 393.91 of this subchapter; and

(3) Baggage, freight, or express on the bus is stowed and secured in a manner which assures—

(i) Unrestricted freedom of movement to the driver and his/her proper operation of the bus;

(ii) Unobstructed access to all exits by any occupant of the bus; and

(iii) Protection of occupants of the bus against injury resulting from the falling or displacement of articles transported in the bus.

[36 FR 18863, Sept. 23, 1971, as amended at 37 FR 12642, June 27, 1972; 38 FR 23522, Aug. 31, 1973; 60 FR 38746, July 28, 1995]

§ 392.9a [Reserved]

§ 392.9b Hearing aid to be worn.

A driver whose hearing meets the minimum requirements of § 391.41(b)(11) of this subchapter only when he/she wears a hearing aid shall wear a hearing aid and have it in operation at all times while he/she is driving. The driver must also have in his/her possession a spare power source for use in the hearing aid.

[36 FR 12857, July 8, 1971]

Subpart B—Driving of Commercial Motor Vehicles

§ 392.10 Railroad grade crossings; stopping required.

(a) Except as provided in paragraph (b) of this section, the driver of a commercial motor vehicle specified in paragraphs (a) (1) through (6) of this section shall not cross a railroad track or tracks at grade unless he/she first: Stops the commercial motor vehicle within 50 feet of, and not closer than 15 feet to, the tracks; thereafter listens and looks in each direction along the tracks for an approaching train; and ascertains that no train is approaching. When it is safe to do so, the driver may drive the commercial motor vehicle across the tracks in a gear that permits the commercial motor vehicle to complete the crossing without a change of gears. The driver must not shift gears while crossing the tracks.

(1) Every bus transporting passengers,

(2) Every commercial motor vehicle transporting any quantity of a Division 2.3 chlorine.

(3) Every commercial motor vehicle which, in accordance with the regulations of the Department of Transportation, is required to be marked or placarded with one of the following classifications:

(i) Division 1.1

(ii) Division 1.2, or Division 1.3

(iii) Division 2.3 Poison gas

(iv) Division 4.3

(v) Class 7

(vi) Class 3 Flammable

(vii) Division 5.1

(viii) Division 2.2

(ix) Division 2.3 Chlorine

(x) Division 6.1 Poison

(xi) Division 2.2 Oxygen

(xii) Division 2.1

(xiii) Class 3 Combustible liquid

(xiv) Division 4.1

(xv) Division 5.1

(xvi) Division 5.2

(xvii) Class 8

(xviii) Division 1.4

(4) Every cargo tank motor vehicle, whether loaded or empty, used for the transportation of any hazardous material as defined in the Hazardous Materials Regulations of the Department of Transportation, Parts 107 through 180 of this title.

(5) Every cargo tank motor vehicle transporting a commodity which at the time of loading has a temperature above its flashpoint as determined by § 173.120 of this title.

(6) Every cargo tank motor vehicle, whether loaded or empty, transporting any commodity under exemption in accordance with the provisions of subpart B of part 107 of this title.

(b) A stop need not be made at:

(1) A streetcar crossing, or railroad tracks used exclusively for industrial switching purposes, within a business district, as defined in § 390.5 of this chapter.

(2) A railroad grade crossing when a police officer or crossing flagman directs traffic to proceed,

(3) A railroad grade crossing controlled by a functioning highway traffic signal transmitting a green indication which, under local law, permits the commercial motor vehicle to proceed across the railroad tracks without slowing or stopping.

(4) An abandoned railroad grade crossing which is marked with a sign indicating that the rail line is abandoned,

(5) An industrial or spur line railroad grade crossing marked with a sign reading ''Exempt.'' Such ''Exempt'' signs shall be erected only by or with the consent of the appropriate State or local authority.

(Sec. 12, 80 Stat. 931; 49 U.S.C. 1651 note; 49 U.S.C. 304, 1655; 49 CFR 1.48(b) and 301.60)

[33 FR 19732, Dec. 25, 1968, as amended at 35 FR 7801, May 21, 1970; 38 FR 1589, Jan. 16, 1973; 40 FR 44555, Sept. 29, 1975; 45 FR 46424, July 10, 1980; 47 FR 47837, Oct. 28, 1982; 59 FR 63924, Dec. 12, 1994; 60 FR 38746, 38747, July 28, 1995]

§ 392.11 Railroad grade crossings; slowing down required.

Every commercial motor vehicle other than those listed in § 392.10 shall, upon approaching a railroad grade crossing, be driven at a rate of speed which will permit said commercial motor vehicle to be stopped before reaching the nearest rail of such crossing and shall not be driven upon or over such crossing until due caution has been taken to ascertain that the course is clear.

[33 FR 19732, Dec. 25, 1968, as amended at 60 FR 38747, July 28, 1995]

§ 392.12 [Reserved]

§ 392.13 Drawbridges; slowing down of commercial motor vehicles.

Any commercial motor vehicle, shall, upon approaching a drawbridge, be driven at a rate of speed which will permit said commercial motor vehicle to be stopped before reaching the lip of the draw and shall proceed only when the draw is completely closed.

[33 FR 19732, Dec. 25, 1968, as amended at 60 FR 38747, July 28, 1995]

§ 392.14 Hazardous conditions; extreme caution.

Extreme caution in the operation of a commercial motor vehicle shall be exercised when hazardous conditions, such as those caused by snow, ice, sleet, fog, mist, rain, dust, or smoke, adversely affect visibility or traction. Speed shall be reduced when such conditions exist. If conditions become sufficiently dangerous, the operation of the commercial motor vehicle shall be discontinued and shall not be resumed until the commercial motor vehicle can be safely operated. Whenever compliance with the foregoing provisions of this rule increases hazard to passengers, the commercial motor vehicle may be operated to the nearest point at which the safety of passengers is assured.

[33 FR 19732, Dec. 25, 1968, as amended at 60 FR 38747, July 28, 1995]

§ 392.15 Required and prohibited use of turn signals.

(a) *Turns.* Every commercial motor vehicle turn shall be signaled for a distance of not less than 100 feet in advance of, and during, the turning movement by flashing the turn signals at the front and the rear of the commercial motor vehicle on the side toward which the turning movement is made.

(b) *Entry into traffic stream.* Turn signals shall be flashed to indicate the direction of commercial motor vehicle movement, prior to and during entry of the commercial motor vehicle into the traffic stream from a parked position.

(c) *Lane changes.* Turn signals shall be flashed to indicate the direction of commercial motor vehicle movement continuously, for a distance of not less than 100 feet in advance of, and during, the turning movement of the commercial motor vehicle from one traffic lane to another.

(d) *Parking or disablement.* Turn signals shall not be flashed on one side only on parked or disabled commercial motor vehicles.

(e) *Courtesy or ''do pass'' signals.* Turn signals shall not be used as courtesy or ''do pass'' signals to operators of motor vehicles approaching from the rear.

[33 FR 19732, Dec. 25, 1968, as amended at 60 FR 38747, July 28, 1995]

§ 392.16 Use of seat belts.

A commercial motor vehicle which has a seat belt assembly installed at the driver's seat shall not be driven unless the driver has properly restrained himself/herself with the seat belt assembly.

[35 FR 10860, July 3, 1970, as amended at 60 FR 38747, July 28, 1995]

§ 392.18 [Reserved]

Subpart C—Stopped Commercial Motor Vehicles

§ 392.20 Unattended commercial motor vehicles; precautions.

No commercial motor vehicle shall be left unattended until the parking brake has been securely set and all reasonable precautions have been taken to prevent the movement of such commercial motor vehicle.

[33 FR 19732, Dec. 25, 1968, as amended at 60 FR 38747, July 28, 1995]

§ 392.21 [Reserved]

§ 392.22 Emergency signals; stopped commercial motor vehicles.

(a) *Hazard warning signal flashers.* Whenever a commercial motor vehicle is stopped upon the traveled portion of a highway or the shoulder of a highway for any cause other than necessary traffic stops, the driver of the stopped commercial motor vehicle shall immediately activate the vehicular hazard warning signal flashers and continue the flashing until the driver places the warning devices required by paragraph (b) of this section. The flashing signals shall be used during the time the warning devices are picked up for storage before movement of the commercial motor vehicle. The flashing lights may be used at other times while a commercial motor vehicle is stopped in addition to, but not in lieu of, the warning devices required by paragraph (b) of this section.

(b) *Placement of warning devices*—(1) *General rule.* Except as provided in paragraph (b)(2) of this section, whenever a commercial motor vehicle is stopped on the traveled portion of a highway or the shoulder of a highway for any cause other than necessary traffic stops, the driver shall as soon as possible, but in any event within 10 minutes, place the warning devices with which the commercial motor vehicle is equipped in conformance with the requirements of § 393.95 of this subchapter, in the following manner:

(i) One at the traffic side of the stopped commercial motor vehicle, within 10 feet of the front or rear of the commercial motor vehicle;

(ii) One at a distance of approximately 100 feet from the stopped commercial motor vehicle in the center of the traffic lane or shoulder occupied by the commercial motor vehicle and in a direction toward traffic approaching in that lane; and

(iii) One at a distance of approximately 100 feet from the stopped commercial motor vehicle in the opposite direction from those placed in accordance with paragraphs (b)(1) (i) and (ii) of this section, in the center of the traffic lane or shoulder occupied by the commercial motor vehicle.

(iv) The same type of required emergency warning device (see § 393.95(f) (1) and (2)) shall be placed at each of the three locations specified in paragraph (b)(1) (i) through (iii) of this section. If supplemental warning devices are also used (see § 393.95(f)(3)), a device of the same type shall be placed at each of those locations.

(2) *Special rules*—(i) *Fusees and liquid-burning flares.* The driver of a commercial motor vehicle equipped with only fusees or liquid-burning flares shall place a lighted fusee or liquid-burning flare at each of the locations specified in paragraph (b)(1) of this section. There shall be at least one lighted fusee or liquid-burning flare at each of the prescribed locations, as long as the commercial motor vehicle is stopped. Before the stopped commercial motor vehicle is moved, the driver shall extinguish and remove each fusee or liquid-burning flare.

(ii) *Daylight hours.* Except as provided in paragraph (b)(2)(iii) of this section, during the period lighted lamps are not required, three bidirectional reflective triangles, or three lighted fusees or liquid-burning flares shall be placed as specified in paragraph (b)(1) of this section within a time of 10 minutes. In the event the driver elects to use only

fusees or liquid-burning flares in lieu of bidirectional reflective triangles or red flags, the driver must ensure that at least one fusee or liquid-burning flare remains lighted at each of the prescribed locations as long as the commercial motor vehicle is stopped or parked.

(iii) *Business or residential districts.* The placement of warning devices is not required within the business or residential district of a municipality, except during the time lighted lamps are required and when street or highway lighting is insufficient to make a commercial motor vehicle clearly discernable at a distance of 500 feet to persons on the highway.

(iv) *Hills, curves, and obstructions.* If a commercial motor vehicle is stopped within 500 feet of a curve, crest of a hill, or other obstruction to view, the driver shall place the warning signal required by paragraph (b)(1) of this section in the direction of the obstruction to view a distance of 100 feet to 500 feet from the stopped commercial motor vehicle so as to afford ample warning to other users of the highway.

(v) *Divided or one-way roads.* If a commercial motor vehicle is stopped upon the traveled portion or the shoulder of a divided or one-way highway, the driver shall place the warning devices required by paragraph (b)(1) of this section, one warning device at a distance of 200 feet and one warning device at a distance of 100 feet in a direction toward approaching traffic in the center of the lane or shoulder occupied by the commercial motor vehicle. He/she shall place one warning device at the traffic side of the commercial motor vehicle within 10 feet of the rear of the commercial motor vehicle.

(vi) *Leaking, flammable material.* If gasoline or any other flammable liquid, or combustible liquid or gas seeps or leaks from a fuel container or a commercial motor vehicle stopped upon a highway, no emergency warning signal producing a flame shall be lighted or placed except at such a distance from any such liquid or gas as will assure the prevention of a fire or explosion.

[37 FR 17175, Aug. 25, 1972, as amended at 40 FR 10685, Mar. 7, 1975; 47 FR 47837, Oct. 28, 1982; 48 FR 57139, Dec. 23, 1983; 59 FR 34711, July 6, 1994; 60 FR 38747, July 28, 1995]

§ 392.24 Emergency signals; flame-producing.

No driver shall attach or permit any person to attach a lighted fusee or other flame-producing emergency signal to any part of a commercial motor vehicle.

[33 FR 19732, Dec. 25, 1968, as amended at 60 FR 38747, July 28, 1995]

§ 392.25 Emergency signals; dangerous cargoes.

No driver shall use or permit the use of any flame-producing emergency signal for protecting any commercial motor vehicle transporting Division 1.1, Division 1.2, or Division 1.3 explosives; any cargo tank motor vehicle used for the transportation of any Class 3 or Division 2.1, whether loaded or empty; or any commercial motor vehicle using compressed gas as a motor fuel. In lieu thereof, emergency reflective triangles, red electric lanterns, or red emergency reflectors shall be used, the placement of which shall be in the same manner as prescribed in § 392.22(b).

[59 FR 63925, Dec. 12, 1994, as amended at 60 FR 38747, July 28, 1995]

Subpart D—Use of Lighted Lamps and Reflectors

§ 392.30—392.32 [Reserved]

§ 392.33 Obscured lamps or reflectors.

No commercial motor vehicle shall be driven when any of the required lamps or reflectors are obscured by the tailboard, by any part of the load, by dirt, or otherwise.

[33 FR 19732, Dec. 25, 1968, as amended at 60 FR 38747, July 28, 1995]

Subpart E—License Revocation; Duties of Driver

§ 392.40—392.41 [Reserved]

§ 392.42 Notification of license revocation.

A driver who receives a notice that his/her license, permit, or privilege to operate a motor vehicle has been revoked, suspended, or withdrawn shall notify the motor carrier that employs him/her of the contents of the notice

before the end of the business day following the day he/she received it.

[35 FR 6466, Apr. 22, 1970]

Subpart F—Fueling Precautions

§ 392.50 Ignition of fuel; prevention.

No driver or any employee of a motor carrier shall:

(a) Fuel a commercial motor vehicle with the engine running, except when it is necessary to run the engine to fuel the commercial motor vehicle;

(b) Smoke or expose any open flame in the vicinity of a commercial motor vehicle being fueled;

(c) Fuel a commercial motor vehicle unless the nozzle of the fuel hose is continuously in contact with the intake pipe of the fuel tank;

(d) Permit, insofar as practicable, any other person to engage in such activities as would be likely to result in fire or explosion.

[33 FR 19732, Dec. 25, 1968, as amended at 60 FR 38747, July 28, 1995]

§ 392.51 Reserve fuel.

No supply of fuel for the propulsion of said commercial motor vehicle or for the operation of accessories shall be carried on any commercial motor vehicle except in a properly mounted fuel tank or tanks.

[33 FR 19732, Dec. 25, 1968, as amended at 60 FR 38747, July 28, 1995]

§ 392.52 Buses; fueling.

No bus shall be fueled in a closed building with passengers aboard. The fueling of buses when passengers are being carried shall be reduced to the minimum number of times necessary during such transportation.

Subpart G—Prohibited Practices

§ 392.60 Unauthorized persons not to be transported.

(a) Unless specifically authorized in writing to do so by the motor carrier under whose authority the commercial motor vehicle is being operated, no driver shall transport any person or permit any person to be transported on any commercial motor vehicle other than a bus. When such authorization is issued, it shall state the name of the person to be transported, the points where the transportation is to begin and end, and the date upon which such authority expires. No written authorization, however, shall be necessary for the transportation of:

(1) Employees or other persons assigned to a commercial motor vehicle by a motor carrier;

(2) Any person transported when aid is being rendered in case of an accident or other emergency;

(3) An attendant delegated to care for livestock.

(b) This section shall not apply to the operation of commercial motor vehicles controlled and operated by any farmer and used in the transportation of agricultural commodities or products thereof from his/her farm or in the transportation of supplies to his/her farm.

[60 FR 38747, July 28, 1995]

§ 392.61—392.62 [Reserved]

§ 392.63 Towing or pushing loaded buses.

No disabled bus with passengers aboard shall be towed or pushed; nor shall any person use or permit to be used a bus with passengers aboard for the purpose of towing or pushing any disabled motor vehicle, except in such circumstances where the hazard to passengers would be increased by observance of the foregoing provisions of this section, and then only in traveling to the nearest point where the safety of the passengers is assured.

[33 FR 19732, Dec. 25, 1968, as amended at 60 FR 38747, July 28, 1995]

§ 392.64 Riding within closed commercial motor vehicles without proper exits.

No person shall ride within the closed body of any commercial motor vehicle unless there are means on the inside thereof of obtaining exit. Said means shall be in such condition as to permit ready operation by the occupant.

[33 FR 19732, Dec. 25, 1968, as amended at 60 FR 38747, July 28, 1995]

§ 392.65 [Reserved]

§ 392.66 Carbon monoxide; use of commercial motor vehicle when detected.

(a) No person shall dispatch or drive any commercial motor vehicle or permit any passengers thereon, when the following conditions are known to exist, until such conditions have been remedied or repaired:

(1) Where an occupant has been affected by carbon monoxide;

(2) Where carbon monoxide has been detected in the interior of the commercial motor vehicle;

(3) When a mechanical condition of the commercial motor vehicle is discovered which would be likely to produce a hazard to the occupants by reason of carbon monoxide.

(b) [Reserved]

[60 FR 38747, July 28, 1995]

§ 392.67 Heater, flame-producing; on commercial motor vehicle in motion.

No open flame heater used in the loading or unloading of the commodity transported shall be in operation while the commercial motor vehicle is in motion.

[33 FR 19732, Dec. 25, 1968, as amended at 60 FR 38747, July 28, 1995]

§ 392.68 Motive power not to be disengaged.

No commercial motor vehicle shall be driven with the source of motive power disengaged from the driving wheels except when such disengagement is necessary to stop or to shift gears.

[33 FR 19732, Dec. 25, 1968, as amended at 60 FR 38747, July 28, 1995]

§ 392.69 [Reserved]

§ 392.71 Radar detectors; use and/or possession.

(a) No driver shall use a radar detector in a commercial motor vehicle, or operate a commercial motor vehicle that is equipped with or contains any radar detector.

(b) No motor carrier shall require or permit a driver to violate paragraph (a) of this section.

[58 FR 67375, Dec. 21, 1993]

PART 393—PARTS AND ACCESSORIES NECESSARY FOR SAFE OPERATION

Subpart A—General

Sec.
393.1 Scope of the rules of this part.
393.3 Additional equipment and accessories.
393.5 Definitions.
393.7 Matter incorporated by reference.

Subpart B—Lighting Devices, Reflectors, and Electrical Equipment

393.9 Lamps operable.
393.11 Lighting devices and reflectors.
393.17 Lamps and reflectors—combinations in driveaway-towaway operation.
393.19 Requirements for turn signaling systems.
393.20 Clearance lamps to indicate extreme width and height.
393.22 Combination of lighting devices and reflectors.
393.23 Lighting devices to be electric.
393.24 Requirements for head lamps and auxiliary road lighting lamps.
393.25 Requirements for lamps other than head lamps.
393.26 Requirements for reflectors.
393.27 Wiring specifications.
393.28 Wiring to be protected.
393.29 Grounds.
393.30 Battery installation.
393.31 Overload protective devices.
393.32 Detachable electrical connections.
393.33 Wiring, installation.

Subpart C—Brakes

393.40 Required brake systems.
393.41 Parking brake system.
393.42 Brakes required on all wheels.
393.43 Breakaway and emergency braking.
393.44 Front brake lines, protection.
393.45 Brake tubing and hose, adequacy.
393.46 Brake tubing and hose connections.
393.47 Brake lining.
393.48 Brakes to be operative.
393.49 Single valve to operate all brakes.
393.50 Reservoirs required.
393.51 Warning devices and gauges.
393.52 Brake performance.
393.53 Automatic brake adjusters and brake adjustment indicators.

Subpart D—Glazing and Window Construction

393.60 Glazing in specified openings.

393.61 Window construction.
393.62 Window obstructions.
393.63 Windows, markings.

Subpart E—Fuel Systems

393.65 All fuel systems.
393.67 Liquid fuel tanks.
393.69 Liquefied petroleum gas systems.

Subpart F—Coupling Devices and Towing Methods

393.70 Coupling devices and towing methods, except for driveaway-towaway operations.
393.71 Coupling devices and towing methods, driveaway-towaway operations.

Subpart G—Miscellaneous Parts and Accessories

393.75 Tires.
393.76 Sleeper berths.
393.77 Heaters.
393.78 Windshield wipers.
393.79 Defrosting device.
393.80 Rear-vision mirrors.
393.81 Horn.
393.82 Speedometer.
393.83 Exhaust system.
393.84 Floors.
393.85 [Reserved]
393.86 Rear end protection.
393.87 Flags on projecting loads.
393.88 Television receivers.
393.89 Buses, driveshaft protection.
393.90 Buses, standee line or bar.
393.91 Buses, aisle seats prohibited.
393.92 Buses, marking emergency doors.
393.93 Seats, seat belt assemblies, and seat belt assembly anchorages.
393.94 Vehicle interior noise levels.

Subpart H—Emergency Equipment

393.95 Emergency equipment on all power units.

Subpart I—Protection Against Shifting or Falling Cargo

393.100 General rules for protection against shifting or falling cargo.
393.102 Securement systems.
393.104 Blocking and bracing.
393.106 Front-end structure.

Subpart J—Frames, Cab and Body Components, Wheels, Steering, and Suspension Systems

393.201 Frames.
393.203 Cab and body components.
393.205 Wheels.
393.207 Suspension systems.
393.209 Steering wheel systems.

AUTHORITY: Sec. 1041(b) of Pub. L. 102–240, 105 Stat. 1914, 1993 (1991); 49 U.S.C. 31136 and 31502; 49 CFR 1.48.

SOURCE: 33 FR 19735, Dec. 25, 1968, unless otherwise noted.

Subpart A—General

SOURCE: 53 FR 49384, Dec. 7, 1988, unless otherwise noted.

§ 393.1 Scope of the rules of this part.

Every employer and employee shall comply and be conversant with the requirements and specifications of this part. No employer shall operate a commercial motor vehicle, or cause or permit it to be operated, unless it is equipped in accordance with the requirements and specifications of this part.

[54 FR 48617, Nov. 24, 1989]

§ 393.3 Additional equipment and accessories.

Nothing contained in this subchapter shall be construed to prohibit the use of additional equipment and accessories, not inconsistent with or prohibited by this subchapter, provided such equipment and accessories do not decrease the safety of operation of the motor vehicles on which they are used.

§ 393.5 Definitions.

As used in this part, the following words and terms are construed to mean:

Agricultural commodity trailer. A trailer that is designed to transport bulk agricultural commodities in off-road harvesting sites and to a processing plant or storage location, as evidenced by skeletal construction that accommodates harvest containers, a maximum length of 28 feet, and an arrangement of air control lines and reservoirs that minimizes damage in field operations.

Brake. An energy conversion mechanism used to stop, or hold a vehicle stationary.

Brake tubing/hose. Metallic brake tubing, nonmetallic brake tubing and brake hose are conduits or lines used in a brake system to transmit or contain the medium (fluid or vacuum) used to apply the motor vehicle's brakes.

Bus. A vehicle designed to carry more than 15 passengers, including the driver.

Chassis. The load-supporting frame in a truck or trailer, exclusive of any appurtenances which might be added to accommodate cargo.

Clearance lamp. A lamp used on the front and the rear of a motor vehicle to indicate its overall width and height.

Container chassis. A semitrailer of skeleton construction limited to a bottom frame, one or more axles, specially built and fitted with locking devices for the transport of cargo containers, so that when the chassis and container are assembled, the units serve the same function as an over the road trailer.

Converter dolly. A motor vehicle consisting of a chassis equipped with one or more axles, a fifth wheel and/or equivalent mechanism, and drawbar, the attachment of which converts a semitrailer to a full trailer.

Curb weight. The weight of a motor vehicle with standard equipment, maximum capacity of fuel, oil, and coolant; and, if so equipped, air conditioning and additional weight of optional engine. Curb weight does not include the driver.

Emergency brake system. A mechanism designed to stop a vehicle after a single failure occurs in the service brake system of a part designed to contain compressed air or brake fluid or vacuum (except failure of a common valve, manifold brake fluid housing or brake chamber housing).

Fifth wheel. A device mounted on a truck tractor or similar towing vehicle (e.g., converter dolly) which interfaces with and couples to the upper coupler assembly of a semitrailer.

Fuel tank fitting. Any removable device affixed to an opening in the fuel tank with the exception of the filler cap.

Grommet. A device that serves as a support and protection to that which passes through it.

Hazard warning signal. Lamps that flash simultaneously to the front and rear, on both the right and left sides of a commercial motor vehicle, to indicate to an approaching driver the presence of a vehicular hazard.

Head lamps. Lamps used to provide general illumination ahead of a motor vehicle.

Heater. Any device or assembly of devices or appliances used to heat the interior of any motor vehicle. This includes a catalytic heater which must meet the requirements of § 177.834(1) of this title when flammable liquid or gas is transported.

Heavy hauler trailer. A trailer with one or more of the following characteristics:

(1) Its brake lines are designed to adapt to separation or extension of the vehicle frame; or

(2) Its body consists only of a platform whose primary cargo-carrying surface is not more than 40 inches above the ground in an unloaded condition, except that it may include sides that are designed to be easily removable and a permanent ''front-end structure'' as that term is used in Section 393.106 of this title.

Identification lamps. Lamps used to identify certain types of commercial motor vehicles.

Lamp. A device used to produce artificial light.

License plate lamp. A lamp used to illuminate the license plate on the rear of a motor vehicle.

Parking brake system. A brake system used to hold a vehicle stationary.

Play. Any free movement of components.

Pulpwood trailer. A trailer that is designed exclusively for harvesting logs or pulpwood and constructed with a skeletal frame with no means for attachment of a solid bed, body, or container, and with an arrangement of air control lines and reservoirs designed to minimize damage in off-road operations.

Rear extremity. The rearmost point on a vehicle when the vehicle's cargo doors, tailgate or other permanent structure are positioned as they normally are when the vehicle is being driven. Non-structural protrusions such as tail lights, hinges, and latches are deleted from the determination of the rearmost point.

Reflective material. A material conforming to Federal Specification L–S–300, ''Sheeting and Tape, Reflective; Non-exposed Lens, Adhesive Backing,''

(September 7, 1965) meeting the performance standard in either Table 1 or Table 1A of SAE Standard J594f, ''Reflex Reflectors'' (January, 1977).

Reflex reflector. A device which is used on a vehicle to give an indication to an approaching driver by reflected lighted from the lamps on the approaching vehicle.

Saddle-mount. A device, designed and constructed as to be readily demountable, used in driveaway-towaway operations to perform the functions of a conventional fifth wheel:

(1) Upper-half. *Upper-half* of a ''saddle-mount'' means that part of the device which is securely attached to the towed vehicle and maintains a fixed position relative thereto, but does not include the ''king-pin;''

(2) Lower-half. *Lower-half* of a ''saddle-mount'' means that part of the device which is securely attached to the towing vehicle and maintains a fixed position relative thereto but does not include the ''king-pin;'' and

(3) King-pin. *King-pin* means that device which is used to connect the ''upper-half'' to the ''lower-half'' in such manner as to permit relative movement in a horizontal plane between the towed and towing vehicles.

Service brake system. A primary brake system used for slowing and stopping a vehicle.

Side extremities. The outermost point on the sides of the vehicle. Nonstructural protrusions such as tail lights, hinges, and latches are excluded from the determination of the outermost point.

Side marker lamp (Intermediate). A lamp shown to the side of a trailer to indicate the approximate middle of a trailer 30 feet or more in length.

Side marker lamps. Lamps used on each side of a trailer to indicate its overall length.

Steering wheel lash. The condition in which the steering wheel may be turned through some part of a revolution without associated movement of the front wheels.

Stop lamps. Lamps shown to the rear of a motor vehicle to indicate that the service brake system is engaged.

Tail lamps. Lamps used to designate the rear of a motor vehicle.

Turn signals. Lamps used to indicate a change in direction by emitting a flashing light on the side of a motor vehicle towards which a turn will be made.

Upper coupler assembly. A structure consisting of an upper coupler plate, king-pin and supporting framework which interfaces with and couples to a fifth wheel.

Upper coupler plate. A plate structure through which the king-pin neck and collar extend. The bottom surface of the plate contacts the fifth wheel when coupled.

§ 393.7 Matter incorporated by reference.

(a) *Incorporation by reference.* Part 393 includes references to certain matter or materials. The text of the materials is not included in the regulations contained in part 393. The materials are hereby made a part of the regulations in part 393. The Director of the Federal Register has approved the materials incorporated by reference in accordance with 5 U.S.C. 552(a) and 1 CFR part 51. For materials subject to change, only the specific version approved by the Director of the Federal Register and specified in the regulation are incorporated. Material is incorporated as it exists on the date of the approval and a notice of any change in these materials will be published in the FEDERAL REGISTER.

(b) *Availability.* The materials incorporated by reference are available as follows:

(1) Standards of the Underwriters Laboratories, Inc. Information and copies may be obtained by writing to: Underwriters Laboratories, Inc., 333 Pfingsten Road, Northbrook, Illinois 60062.

(2) Specifications of the American Society for Testing and Materials. Information and copies may be obtained by writing to: American Society for Testing and Materials, 1916 Race Street, Philadelphia, Pennsylvania 19103.

(3) Specifications of the National Association of Chain Manufacturers. Information and copies may be obtained by writing to: National Association of Chain Manufacturers, P.O. Box 3143, York, Pennsylvania 17402–0143.

(4) Specifications of the Web Sling and Tiedown Association. Information and copies may be obtained by writing to: Web Sling and Tiedown Association, Inc., 710 East Ogden Avenue, suite 113, Naperville, Illinois 60563.

(5) Manuals of the Wire Rope Technical Board. Information and copies may be obtained by writing to: Wire Rope Technical Committee, P.O. Box 849, Stevensville, Maryland 21666.

(6) Standards of the Cordage Institute. Information and copies may be obtained by writing to: Cordage Institute, 350 Lincoln Street, No. 115, Hingham, Massachusetts 02043.

(7)–(9) [Reserved]

(10) All of the materials incorporated by reference are available for inspection at:

(i) The Department of Transportation Library, 400 Seventh Street, SW., Washington, DC 20590 in room 2200. These documents are also available for inspection and copying as provided in 49 CFR part 7, appendix D; and

(ii) The Office of the Federal Register, 800 North Capitol Street, NW., suite 700, Washington, DC.

[59 FR 34712, July 6, 1994, as amended at 59 FR 34718, July 6, 1994]

Subpart B—Lighting Devices, Reflectors, and Electrical Equipment

§ 393.9 Lamps operable.

All lamps required by this subpart shall be capable of being operated at all times.

(49 U.S.C. 304, 1655; 49 CFR 1.48(b) and 301.60)

[47 FR 47837, Oct. 28, 1982]

§ 393.11 Lighting devices and reflectors.

The following Table 1 sets forth the required color, position, and required lighting devices by type of commercial motor vehicle. Diagrams illustrating the locations of lighting devices and reflectors, by type and size of commercial motor vehicle, are shown immediately following Table 1. All lighting devices on motor vehicles placed in operation after March 7, 1989, must meet the requirements of 49 CFR 571.108 in effect at the time of manufacture of the vehicle. Motor vehicles placed in operation on or before March 7, 1989, must meet either the requirements of this subchapter or part 571 of this title in effect at the time of manufacture.

TABLE 1.—REQUIRED COMMERCIAL VEHICLE LIGHTING EQUIPMENT

Item on the vehicle	Quantity	Color	Location	Position	Height above road surface in inches measured from the center of the lamp at curb weight	Required lighting devices/vehicles
Headlamps	2 At Least	White	Front	On the front at the same height, an equal number at each side of the vertical centerline as far apart as practicable.	Not less than 22 nor more than 54.	A, B, C
Turn Signal (Front) See Footnotes #2 & 12.	2	Amber	At or Near Front	One on each side of the vertical centerline at the same height and as far apart as practicable.	Not less than 15 nor more than 83.	A, B, C
Identification Lamp (Front) Footnote #1	3	Amber	Front	Mounted on the vertical centerline of the vehicle or the vertical centerline of the cab where different from the centerline of the vehicle.	All three on same level as close as practicable to the top of the vehicle with lamp centers spaced not less than 6 inches or more than 12 inches apart.	B, C
Tail Lamp See Footnotes #5 & 11	2	Red	Rear	One lamp each side of the vertical centerline at the same height and as far apart as practicable.	Both on the same level between 15 and 72.	A, B, C, D, E, F, G, H
Stop Lamp See Footnotes #5 & 13	2	Red	Rear	One lamp each side of the vertical centerline at the same height and as far apart as practicable.	Both on the same level between 15 and 72.	A, B, C, D, E, F, G
Clearance Lamps See Footnotes #9, 10, & 15.	2	Amber	One on each side of front.	One on each side of the vertical centerline to indicate width.	Both on same level as high as practicable.	B, C, D, G, H
	2	Red	One on each side of rear.	One on each side of the vertical centerline to indicate overall width.	Both on same level as high as practicable.	B, D, G, H
Side Marker Lamp, Intermediate	2	Amber	One on each side.	At or near midpoint between front and rear side marker lamps, if over 30′ in length.	Not less than 15	A, B, D, F, G
Reflex Reflector Intermediate (Side)	2	Amber	One on each side.	At or near midpoint between front and rear side reflectors if over 30′ in length.	Between 15 and 60	A, B, D, F, G
Reflex Reflector (Rear) See Footnotes #5, 6, & 8.	2	Red	Rear	One on each side of vertical centerline, as far apart as practicable.	Both on same level, between 15 and 60.	A, B, C, D, E, F, G
Reflex Reflector (Rear Side) Footnote #4.	2	Red	One on each side (rear).	As far to the rear as practicable	Both on same level, between 15 and 60.	A, B, D, F, G
Reflex Reflector (Front Side)	2	Amber	One on each side (front).	As far to the front as practicable	Between 15 and 60	A, B, C, D, F, G
License Plate Lamp Rear See Footnote #11.	1	White	At rear license plate.	To illuminate the license plate from the top or sides.	No requirements	A, B, C, D, F, G
Side Marker Lamp (Front)	2	Amber	One on each side.	As far to the front as practicable	Not less than 15	A, B, C, D, F
Side Marker Lamp (Rear) See Footnotes #4 & 8.	2	Red	One on each side.	As far to the rear as practicable	Not less than 15 and on the rear of trailer, not more than 60.	A, B, D, F, G
Turn Signal (Rear) See Footnotes #5 & 12.	2	Amber or Red.	Rear	One lamp on each side of the vertical centerline as far apart as practicable.	Both on the same level, between 15 and 83.	A, B, C, D, E, F, G

Identification Lamp (Rear) See Footnotes #3, 7 & 15.	3	Red	Rear	One as close as practicable to vertical centerline. One on each side with lamp centers spaced not less than 6″ or more than 12″ apart.	All three on same level as close as practicable to the top of the vehicle.	B, D, G
Vehicular Hazard Warning Flashing Lamps See Footnote #12.	2	Amber	Front	One lamp on each side of vertical centerline as far apart as practicable.	Both on same level, between 15 and 83.	A, B, C, D, E, F, G
	2	Amber or Red.	Rear			
Backup Lamp See Footnote #14	1	White	Rear	Rear	No requirement	A, B, C
Parking Lamp	2	Amber or white.	Front	One lamp on each side of vertical centerline as far apart as practicable.	Both on same level, between 15 and 72.	A

* Lighting Required per Type of Commercial Vehicle as Shown **Last Column of Table.**

A. Small buses and trucks less than 80 inches in overall width.
B. Buses and trucks 80 inches or more in overall width.
C. Truck Tractors.
D. Large semitrailers and full trailers 80 inches or more in overall width except converter dollies.
E. Converter dolly.
F. Small semitrailers and full trailers less than 80 inches in overall width.
G. Pole Trailers.
H. Projecting loads.
Lamps and reflectors may be combined as permitted by Paragraphs 393.22 and S4.4 of 49 CFR 571.108, Equipment combinations.

Footnote—1

Identification lamps may be mounted on the vertical centerline of the cab where different from the centerline of the vehicle, except where the cab is not more than 42 inches wide at the front roofline, then a single lamp at the center of the cab shall be deemed to comply with the requirements for identification lamps. No part of the identification lamps or their mountings may extend below the top of the vehicle windshield.

Footnote—2

Unless the turn signals on the front are so constructed (double-faced) and located as to be visible to passing drivers, two turn signals are required on the rear of the truck tractor, one at each side as far apart as practicable.

Footnote—3

The identification lamps need not be visible or lighted if obscured by a vehicle in the same combination.

Footnote—4

Any semitrailer or full trailer vehicles manufactured on and after March 1, 1979, shall be equipped with rear side-marker lamps at a height of not less than 15 inches (381 mm) nor more than 60 inches (1524 mm) above the road surface, as measured from the center of the lamp on the vehicle at curb weight. The rear side marker lamps shall be visible in the vehicle's rearview mirrors when the trailer is tracking straight.

Footnote—5

For purposes of these regulations, each converter dolly shall be equipped with one stop lamp, one tail lamp, and two reflectors on the rear at each side when towed singly by another vehicle. Each converter dolly shall be equipped with turn signals at the rear if the converter dolly obscures the turn signals at the rear of the towing vehicle when towed singly by another vehicle.

Footnote—6

Pole trailers will have two reflectors, one on each side, placed to indicate extreme width of the trailer.

Footnote—7

Pole trailers may have three identification lamps mounted on the vertical centerline of the rear of the cab of the truck tractor drawing the pole trailer, and higher than the load being transported, in lieu of the three identification lamps mounted on the rear vertical centerline of the trailer.

Footnote—8

Pole trailers shall have on the rearmost support for the load, one combination marker lamp or two single lamps showing amber to the front and red to the rear and side, mounted on each side to indicate maximum width of the pole trailer; and one red reflector on each side of the rearmost support for the load.

Footnote—9

Any motor vehicle transporting a load which extends more than 4 inches beyond the width of the motor vehicle, or having projections beyond the rear of such vehicles, shall be equipped with the following lamps in addition to other required lamps, have the loads marked

Loads projecting more than 4 inches beyond sides of motor vehicles:

(1) The foremost edge of the projecting load at its outermost extremity shall be marked with an amber lamp visible from the front and both sides.

(2) The rearmost edge of the projecting load at its outermost extremity shall be marked with a red lamp visible from the rear and side.

(3) If any portion of the projecting load extends beyond both the foremost and rearmost edge, it shall be marked with an amber lamp visible from the front, both sides, and rear.

(4) If the protecting load does not measure more than 3 feet from front to rear, it shall be marked with an amber lamp visible from the front, both sides, and rear, except that if the projection is located at or near the rear it shall be marked by a red lamp visible from front, side, and rear.

Footnote—10

Projections beyond rear of motor vehicles. Motor vehicles transporting loads which extend more than 4 feet beyond the rear of the motor vehicle, or which have these tailboards or tailgates extending more than 4 feet beyond the body, shall have projections marked as follows:

(1) On each side of the projecting load, one red lamp, visible from the side, located so as to indicate maximum overhang.

(2) On the rear of the projecting load, two red lamps, visible from the rear, one at each side; and two red reflectors visible from the rear, one at each side, located so as to indicate maximum width.

Footnote—11

To be illuminated when tractor headlamps are illuminated.

Footnote—12

Every bus, truck, and truck tractor shall be equipped with a signaling system that, in addition to signaling turning movements, shall have a switch or combination of switches that will cause the two front turn signals and the two rear signals to flash simultaneously as a vehicular traffic signal warning, required by § 392–22(a). The system shall be capable of flashing simultaneously with the ignition of the vehicle on or off.

Footnote—13

To be actuated upon application of service brakes.

Footnote—14

Backup lamp required to operate when bus, truck, or truck tractor is in reverse.

Footnote—15

When the rear identification lamps are mounted at the extreme height of a vehicle, rear clearance lamps need not meet the requirement that they be located as close as practicable to the top of the vehicle.

Truck Tractor
Rear View

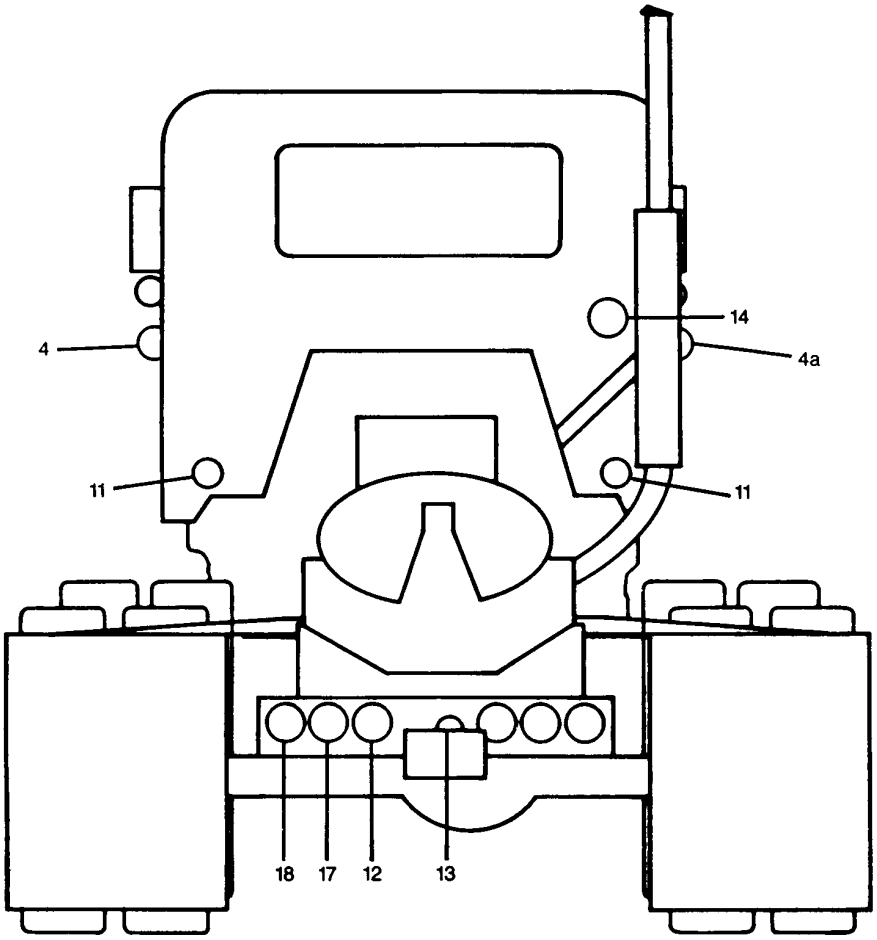

Truck Tractor
Front & Side View

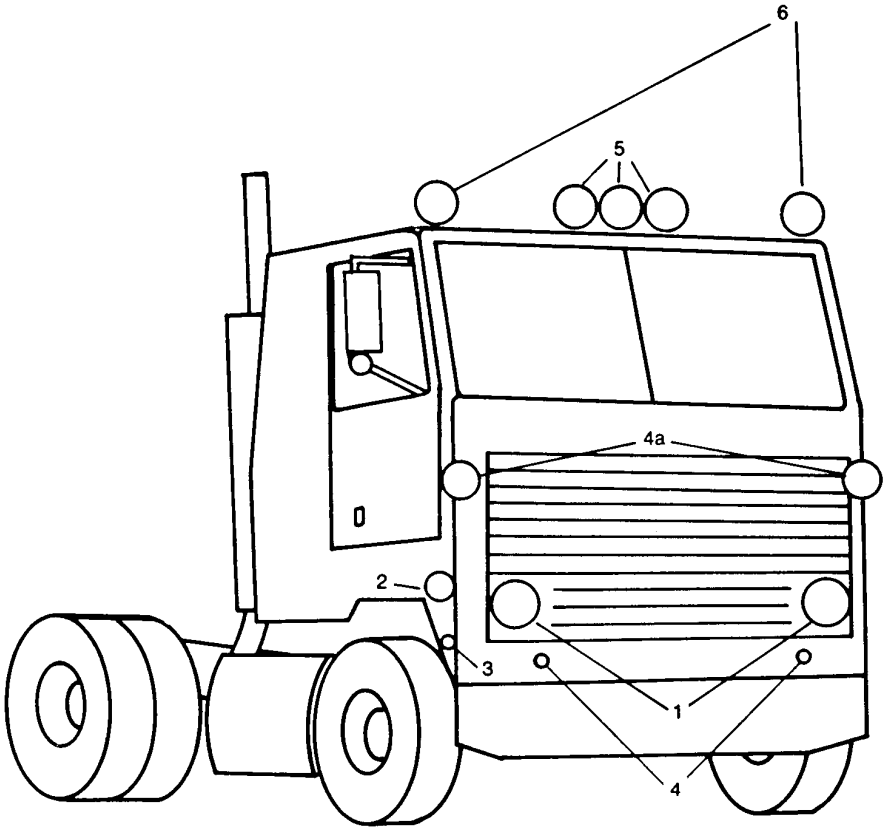

Large Trailers

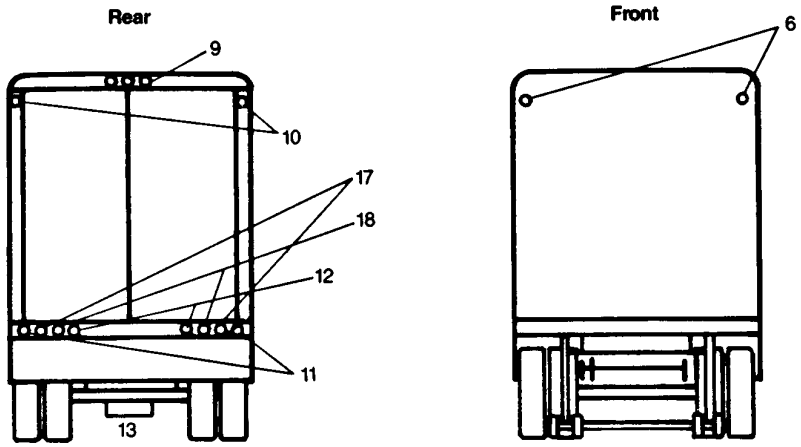

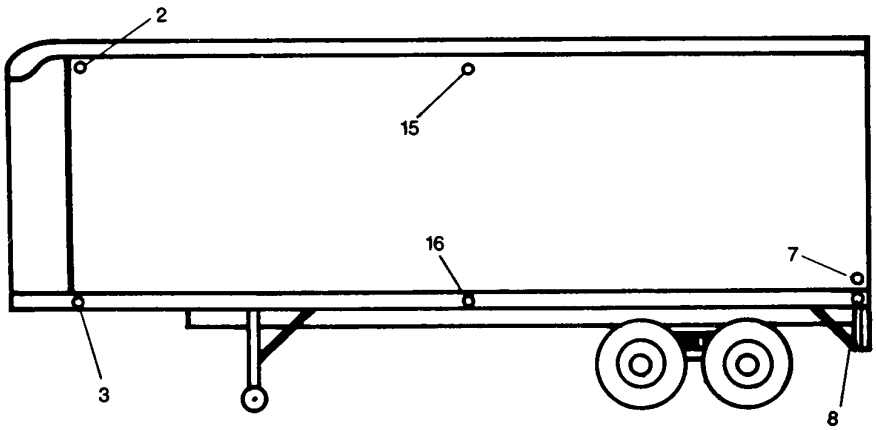

Over 80 Inches

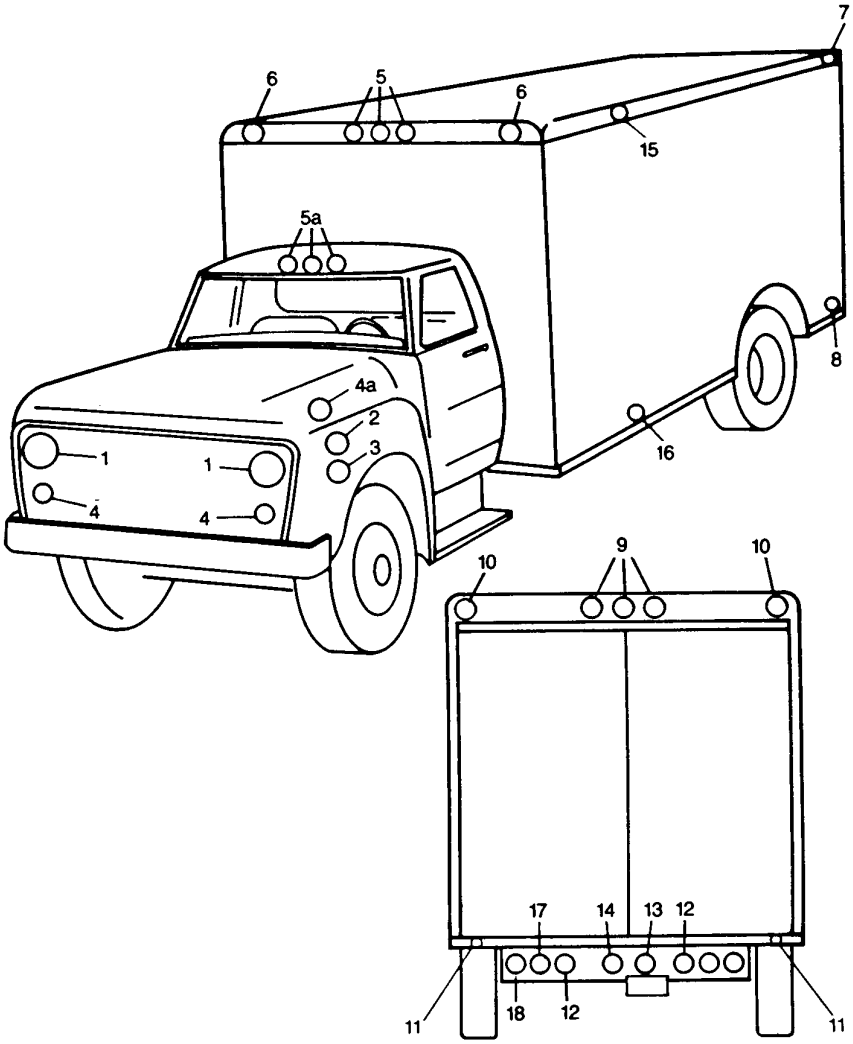

Under 80 Inches

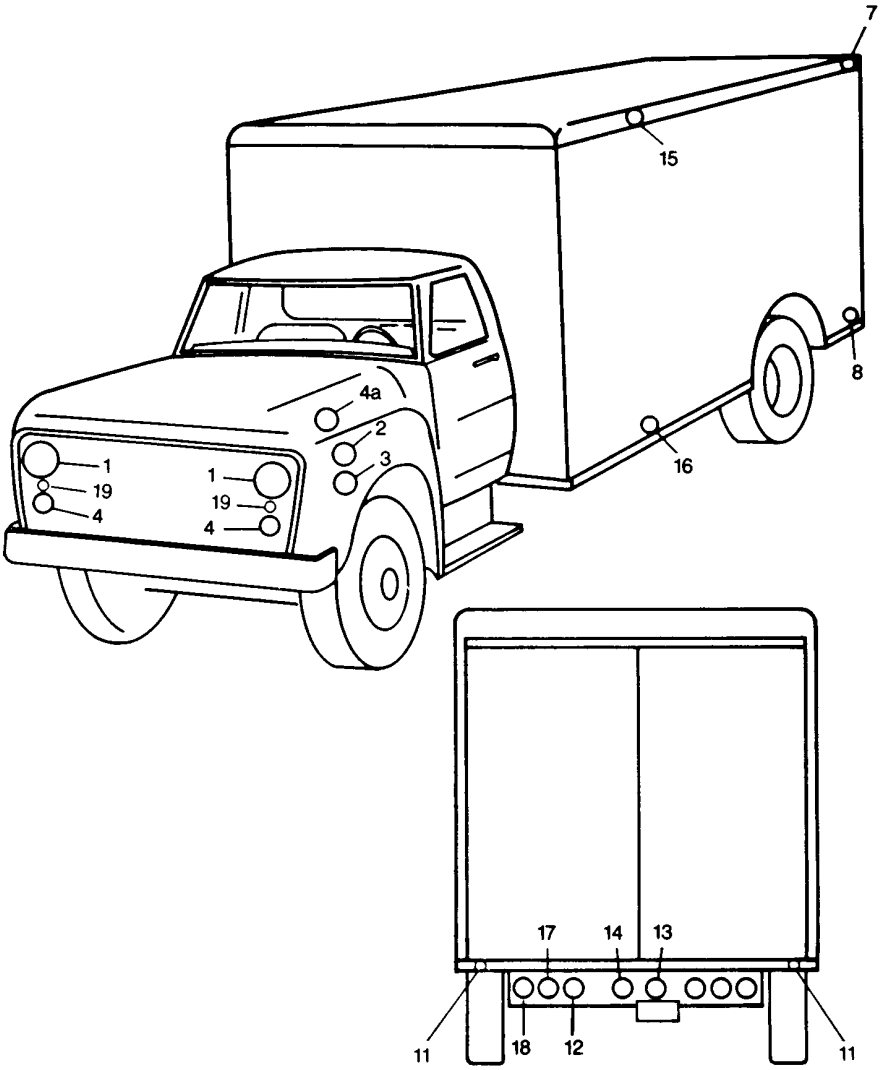

Under 80 Inches

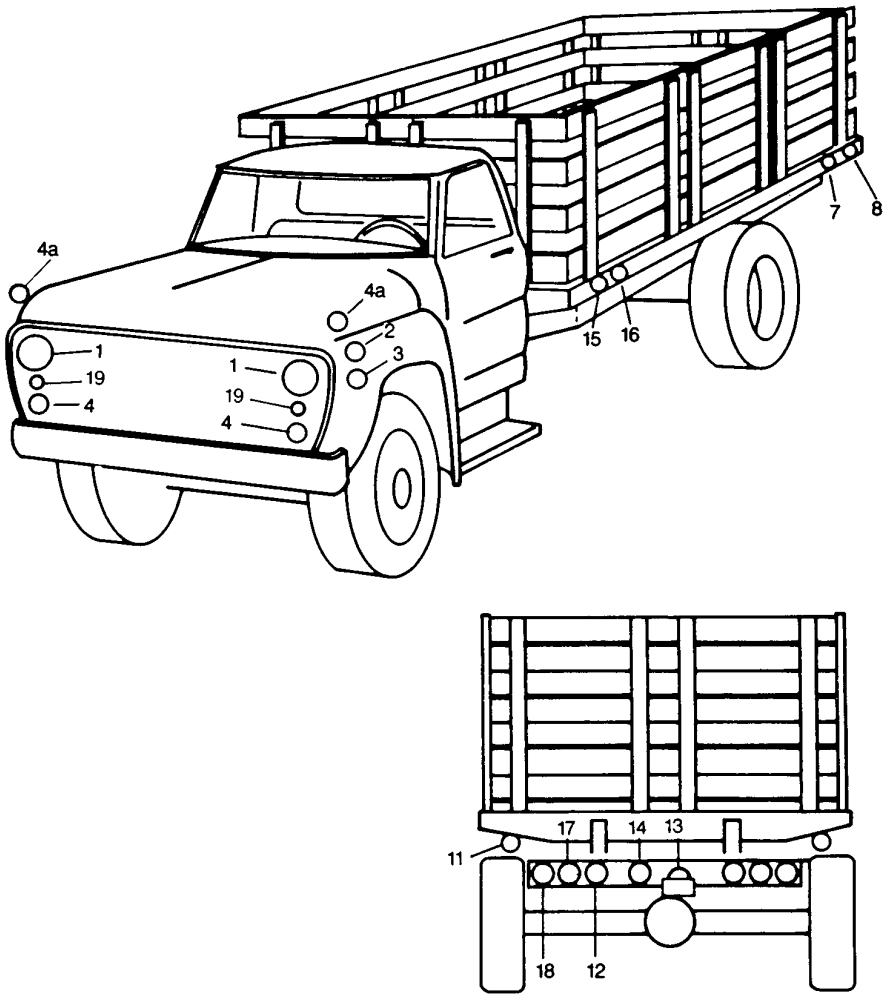

Large Bus

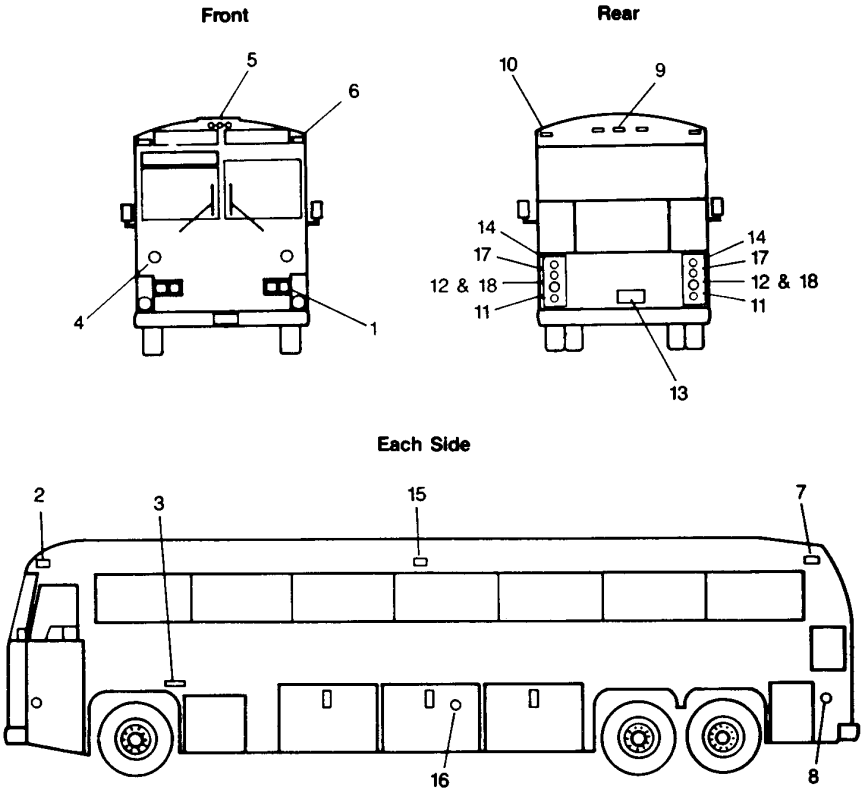
Front
5
6
4
1
Rear
10
9
14
17
12 & 18
11
14
17
12 & 18
11
13
Each Side
2
3
15
7
16
8

Pole Trailers — All Vehicle Widths

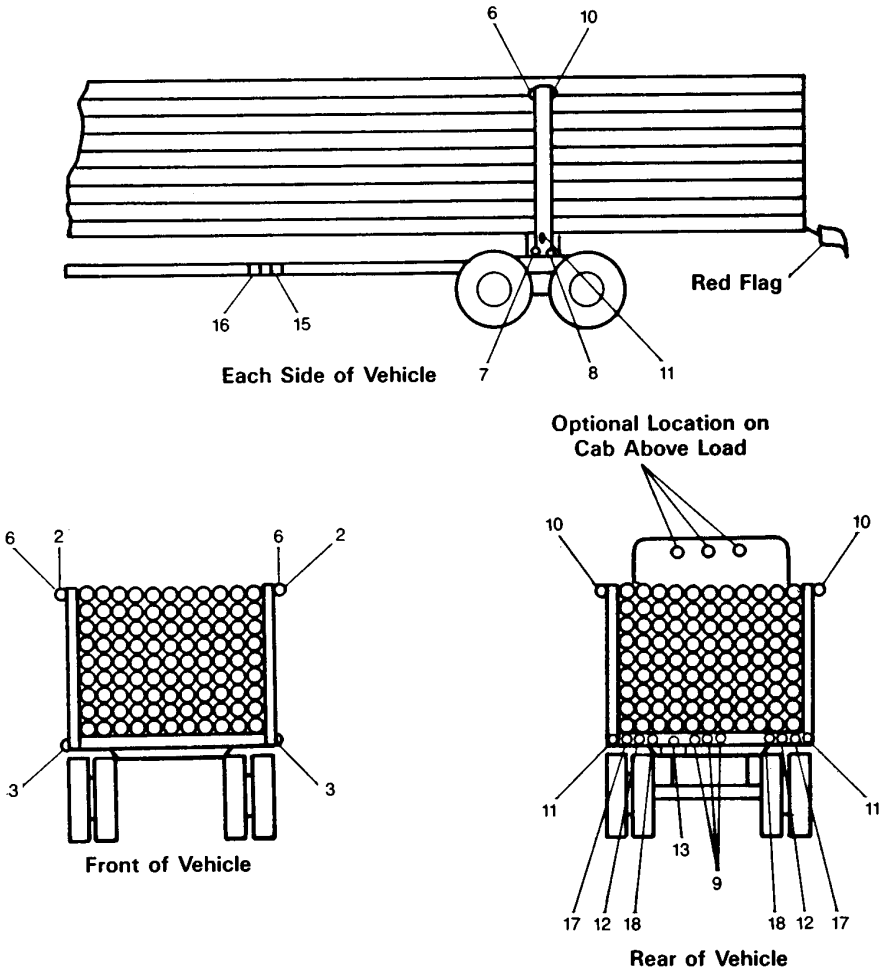

Container Chassis

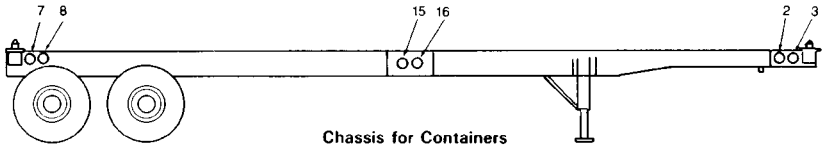

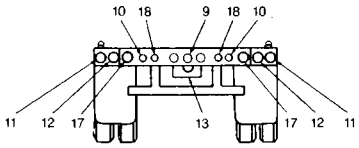

Rear

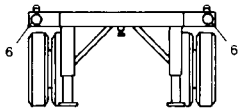

Front

Converter Dolly

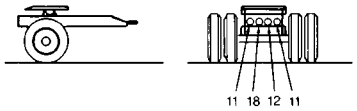

LEGEND (USED IN ILLUSTRATIONS)

1. Headlamps (2)-White (4 optional)
2. Side-marker lamps. Front (2)-Amber
3. Side reflectors. Front (2)-Amber
4. Turn-signal lamps. Front (2)-Amber
4a. Turn-signal lamps. Front (2)-Amber (Optional location)
5. Identification lamps. Front (3)-Amber
5a. Identification lamps. Front (3)-Amber (Optional location)
6. Clearance lamps. Front (2)-Amber
7. Side-marker lamps. Rear (2)-Red
8. Side-reflectors. Rear (2)-Red
9. Identification lamps. Rear (3)-Red
10. Clearance lamps. Rear (2)-Red
11. Reflectors Rear (2)-Red
12. Stop lamps. Rear (2)-Red
13. License plate lamp. Rear (1)-White
14. Backup lamp. Rear (1)-White (location optional provided optional requirements are met)
15. Side-marker lamps. Intermediate (2)-Amber (if vehicle is 30' or more overall length)
16. Side reflectors. Intermediate (2)-Amber (if vehicle is 30' or more overall length)
17. Turn signal lamps. Rear (2)-Amber or Red
18. Tail lamps. Rear (2)-Red
19. Parking lamps. Front 2-Amber or White

[53 FR 49385, Dec. 7, 1988]

§ 393.17 Lamps and reflectors—combinations in driveaway-towaway operation.

A combination of motor vehicles engaged in driveaway-towaway operation must be equipped with operative lamps and reflectors conforming to the rules in this section.

(a) The towing vehicle must be equipped as follows:

(1) On the front, there must be at least two headlamps, an equal number at each side, two turn signals, one at each side, and two clearance lamps, one at each side.

(2) On each side, there must be at least one side-marker lamp, located near the front of the vehicle.

(3) On the rear, there must be at least two tail lamps, one at each side, and two stop lamps, one at each side.

(b) Except as provided in paragraph (c) of this section, the rearmost towed vehicle of the combination (including the towed vehicle or a tow-bar combination, the towed vehicle of a single saddle-mount combination, and the rearmost towed vehicle of a double or triple saddle-mount combination) or, in the case of a vehicle full-mounted on a saddle-mount vehicle, either the full-mounted vehicle or the rearmost saddle-mounted vehicle must be equipped as follows:

(1) On each side, there must be at least one side-marker lamp, located near the rear of the vehicle.

(2) On the rear, there must be at least two tail lamps, two stop lamps, two turn signals, two clearance lamps, and two reflectors, one of each type at each side. In addition, if any vehicle in the combination is 80 inches or more in overall width, there must be three identification lamps on the rear.

(c) If the towed vehicle in a combination is a mobile structure trailer, it must be equipped in accordance with the following lighting devices. For the purposes of this part, *mobile structure trailer* means a trailer that has a roof and walls, is at least 10 feet wide, and can be used off road for dwelling or commercial purposes.

(1) When the vehicle is operated in accordance with the terms of a special permit prohibiting operation during the times when lighted lamps are required under § 392.30, it must have on the rear—

(i) Two stop lamps, one on each side of the vertical centerline, at the same height, and as far apart as practicable;

(ii) Two tail lamps, one on each side of the vertical centerline, at the same height, and as far apart as practicable;

(iii) Two red reflex reflectors, one on each side of the vertical centerline, at the same height, and as far apart as practicable; and

(iv) Two turn signal lamps, one on each side of the vertical centerline, at the same height, and as far apart as practicable.

(2) At all other times, the vehicle must be equipped as specified in paragraph (b) of this section.

(d) An intermediate towed vehicle in a combination consisting of more than two vehicles (including the first saddle-mounted vehicle of a double saddle-mount combination and the first and second saddle-mount vehicles of a triple saddle-mount combination) must have one side-marker lamp on each side, located near the rear of the vehicle.

(Tow-bar diagram to illustrate § 393.17.)

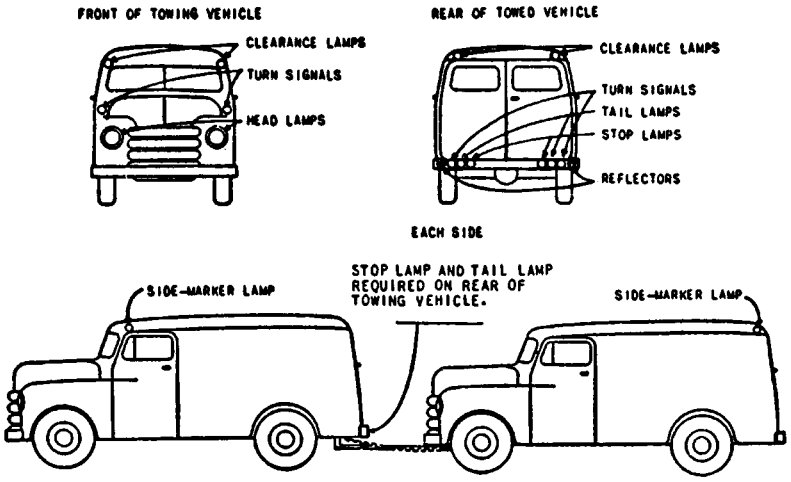

Lamps may be combined as permitted by § 393.22(e). Color of exterior lighting devices shall conform to requirements of § 393.25(e). Color of reflectors shall conform to requirements of § 393.26(d).

(Double-saddle-mount diagram to illustrate § 393.17.)

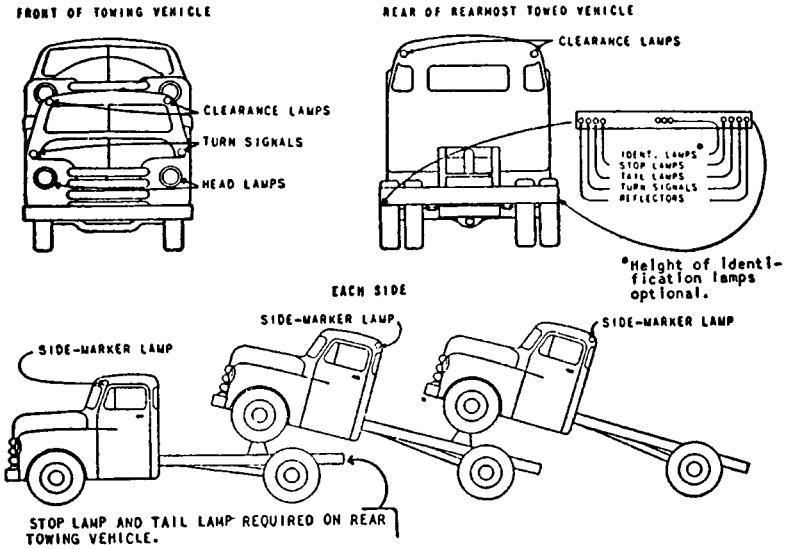

Lamps may be combined as permitted by § 393.22. Color of exterior lighting devices shall conform to requirements of § 393.25(e). Color of reflectors shall conform to requirements of § 393.26(d).

(Single-saddle-mount diagram to illustrate § 393.17.)

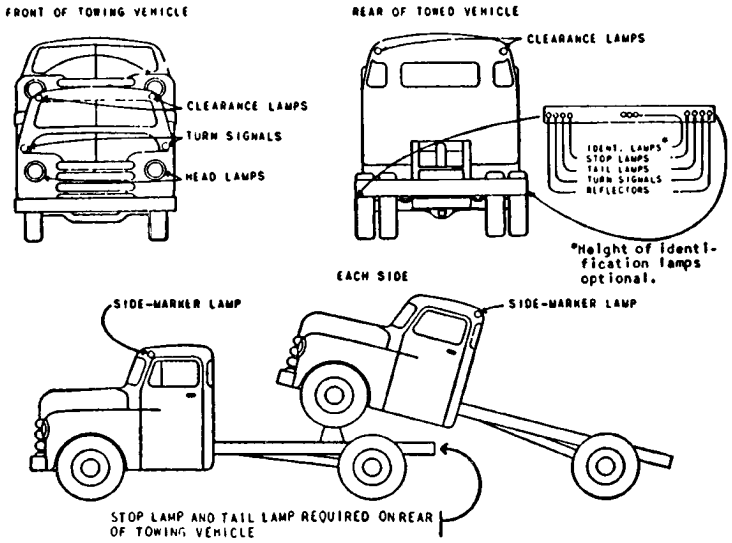

Lamps may be combined as permitted by § 393.22. Color of exterior lighting devices shall conform to requirmeents of § 393.25(e). Color of reflectors shall conform to requirements of § 393.26(d).

(49 U.S.C. 304, 1655; 49 CFR 1.48(b) and 301.60)

[40 FR 36126, Aug. 19, 1975, as amended at 47 FR 47837, Oct. 28, 1982]

§ 393.19 Requirements for turn signaling systems.

(a) Every bus, truck, or truck tractor shall be equipped with a signaling system that in addition to signaling turning movements shall have a switch or combination of switches that will cause the two front turn signals and the two rear turn signals to flash simultaneously as a vehicular traffic hazard warning as required by § 392.22 with the ignition on or off.

(b) Every semitrailer and full trailer shall be equipped so as to have the two rear turn signals to flash simultaneously with the two front turn signals of the towing vehicle as a vehicular traffic hazard warning as required by § 392.22(a).

[53 FR 49397, Dec. 7, 1988]

§ 393.20 Clearance lamps to indicate extreme width and height.

Clearance lamps shall be mounted so as to indicate the extreme width of the motor vehicle (not including mirrors) and as near the top thereof as practicable: *Provided,* That when rear identification lamps are mounted at the extreme height of the vehicle, rear clearance lamps may be mounted at optional height: *And provided further,* That when mounting of front clearance lamps at the highest point of a trailer results in such lamps failing to mark the extreme width of the trailer, such lamps may be mounted at optional height but must indicate the extreme width of the trailer. Clearance lamps on truck tractors shall be so located as to indicate the extreme width of the truck tractor cab.

(Diagram to illustrate § 393.20 for mounting of lamps on vehicles without permanent top or sides.)

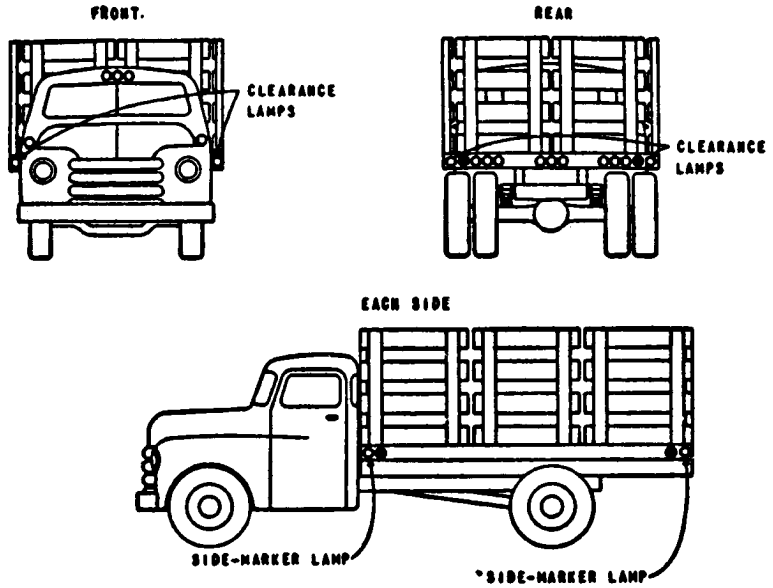

Lamps may be combined as permitted by § 393.22. Color of exterior lighting devices shall conform to requirements of § 393.25(e). Color of reflectors shall conform to requirements of § 393.26(d).

Diagram to illustrate §393.20 for mounting of front clearance lamps on truck tractors with sleeper cabs.)

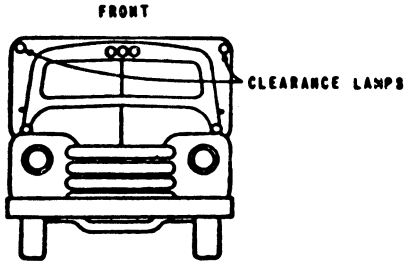

[33 FR 19735, Dec. 25, 1968, as amended at 34 FR 6851, Apr. 24, 1969]

§393.22 Combination of lighting devices and reflectors.

(a) *Permitted combinations.* Except as provided in paragraph (b) of this section, two or more lighting devices and reflectors (whether or not required by the rules in this part) may be combined optically if—

(1) Each required lighting device and reflector conforms to the applicable rules in this part; and

(2) Neither the mounting nor the use of a nonrequired lighting device or reflector impairs the effectiveness of a required lighting device or reflector or causes that device or reflector to be inconsistent with the applicable rules in this part.

(b) *Prohibited combinations.* (1) A turn signal lamp must not be combined optically with either a head lamp or other lighting device or combination of lighting devices that produces a greater intensity of light than the turn signal lamp.

(2) A turn signal lamp must not be combined optically with a stop lamp unless the stop lamp function is always deactivated when the turn signal function is activated.

(3) A clearance lamp must not be combined optically with a tail lamp or identification lamp.

[39 FR 26908, July 24, 1974]

§ 393.23 Lighting devices to be electric.

Lighting devices shall be electric, except that red liquid-burning lanterns may be used on the end of loads in the nature of poles, pipes, and ladders projecting to the rear of the motor vehicle.

§ 393.24 Requirements for head lamps and auxiliary road lighting lamps.

(a) *Mounting.* Head lamps and auxiliary road lighting lamps shall be mounted so that the beams are readily adjustable, both vertically and horizontally, and the mounting shall be such that the aim is not readily disturbed by ordinary conditions of service.

(b) *Head lamps required.* Every bus, truck, and truck tractor shall be equipped with a headlighting system composed of at least two head lamps, not including fog or other auxiliary lamps, with an equal number on each side of the vehicle. The headlighting system shall provide an upper and lower distribution of light, selectable at the driver's will.

(c) *Fog, adverse-weather, and auxiliary road-lighting lamps.* For the purposes of this section, fog, adverse-weather, and auxiliary road lighting lamps, when installed, are considered to be a part of the headlighting system. Such lamps may be used in lieu of head lamps under conditions making their use advisable if there be at least one such lamp conforming to the appropriate SAE Standard[1] for such lamps on each side of the vehicle.

(d) *Aiming and intensity.* Head lamps shall be constructed and installed so as to provide adequate and reliable illumination and shall conform to the appropriate specification set forth in the SAE Standards[1] for ''Electric Head Lamps for Motor Vehicles'' or ''Sealed-Beam Head Lamp Units for Motor Vehicles.''

[33 FR 19735, Dec. 25, 1968, as amended at 41 FR 53031, Dec. 3, 1976; 53 FR 49397, Dec. 7, 1988]

§ 393.25 Requirements for lamps other than head lamps.

(a) *Mounting.* All lamps shall be permanently and securely mounted in workmanlike manner on a permanent part of the motor vehicle, except that temporary lamps on motor vehicles being transported in driveaway-towaway operations and temporary electric lamps on projecting loads need not be permanently mounted nor mounted on a permanent part of the vehicle. The requirement for three identification lamps on the centerline of a vehicle will be met as to location by one lamp on the centerline, with the other two at right and left. All temporary lamps must be firmly attached.

(b) *Visibility.* All required exterior lamps shall be so mounted as to be capable of being seen at all distances between 500 feet and 50 feet under clear atmospheric conditions during the time lamps are required to be lighted. The light from front clearance and front identification lamps shall be visible to the front, that from sidemarker lamps to the side, that from rear clearance, rear identification, and tail lamps to the rear, and that from projecting loadmarker lamps from those directions required by § 393.11. This shall not be construed to apply to lamps on one unit which are obscured by another unit of a combination of vehicles.

(c) *Specifications.* All required lamps except those already installed on vehicles tendered for transportation in

---

[1] Wherever reference is made in these regulations to SAE Standards or SAE Recommended Practices, they shall be:

(a) As found in the 1985 edition of the SAE Handbook with respect to parts and accessories other than lighting devices and reflectors.

(b) When reference is made in these regulations to SAE Standards or SAE Recommended Practices, they shall be as found in the 1985 edition of the SAE Handbook:

(1) With respect to parts and accessories other than lighting devices and reflectors:

(2) Lighting devices and reflectors on motor vehicles manufactured on and after March 7, 1990, shall conform to FMVSS 571.108 (49 CFR 571.108) in effect at the time of manufacture of the vehicle. Should a conflict arise between FMVSS 571.108 and a SAE Standard, FMVSS 571.108 will prevail.

driveaway and towaway operations shall conform to appropriate requirements of the SAE Standards and/or Recommended Practices[1] as indicated below, except that the minimum required marking of lamps conforming to the 1985 requirements shall be as specified in paragraph (d) of this section. Projecting load marker lamps shall conform to the requirements for clearance, side-marker, and identification lamps. Turn signals shall conform to the requirements for class A, Type I turn signals, provided.

(1) Lamps on vehicles made before July 1, 1961, excepting replacement lamps as specified in paragraph (c)(2) of this section, shall conform to the 1952 requirements.

(2) Lamps on vehicles made on and after July 1, 1961, and replacement lamps installed on and after December 31, 1961, shall conform to the 1985 requirements.

(3) Lamps temporarily attached to vehicles transported in driveaway and towaway operations on and after December 31, 1961, shall conform to the 1985 requirements.

(d) *Certification and markings.* All lamps required to conform to the requirements of the SAE Standards[1] shall be certified by the manufacturer or supplier that they do so conform, by markings indicated below. The markings in each case shall be visible when the lamp is in place on the vehicle.

(1) Stop lamps shall be marked with the manufacturer's or supplier's name or trade name and shall be marked ''SAE–S''.

(2) Turn signal units shall be marked with the manufacturer's or supplier's name or trade name and shall be marked ''SAE–AI'' or ''SAE–I''.

(3) Tail lamps shall be marked with the manufacturer's or supplier's name or trade name and shall be marked ''SAE–T''.

(4) Clearance, side marker, identification, and projecting load-marker lamps, except combination lamps, shall be marked with the manufacturer's or supplier's name or trade name and shall be marked ''SAE'' or ''SAE–P''.

(5) Combination lamps shall be marked with the manufacturer's or supplier's name or trade name and shall be marked ''SAE'' followed by the appropriate letters indicating the individual lamps combined. The letter ''A'', as specified in §393.26(c), may be included to certify that a reflector in the combination conforms to the requirements appropriate to such marking. If the letter ''I'' follows the letter ''A'' immediately the two letters shall be deemed to refer to a turn signal unit, as specified in paragraph (d)(2) of this section. Combination clearance and side marker lamps may be marked ''SAE–PC''.

(e) *Lighting devices to be steady-burning.* All exterior lighting devices shall be of the steady-burning type except turn signals on any vehicle, stop lamps when used as turn signals, warning lamps on school buses when operating as such, and warning lamps on emergency and service vehicles authorized by State or local authorities, and except that lamps combined into the same shell or housing with any turn signal may be turned off by the same switch that turns the signal on for flashing and turned on again when the turn signal as such is turned off. This paragraph shall not be construed to prohibit the use of vehicular hazard warning signal flashers as required by §392.22 or permitted by §392.18.

(f) *Stop lamp operation.* All stop lamps on each motor vehicle or combination of motor vehicles shall be actuated upon application of any of the service brakes, except that such actuation is not required upon activation of the emergency feature of trailer brakes by means of either manual or automatic control on the towing vehicle, and except that stop lamps on a towing vehicle need not be actuated when service brakes are applied to the towed vehicles or vehicles only, and except that no stop lamp need be actuated as such when it is in use as a turn signal or when it is turned off by the turn signal switch as provided in paragraph (e) of this section.

[33 FR 19735, Dec. 25, 1968, as amended at 48 FR 57139, Dec. 28, 1983; 53 FR 49397, Dec. 7, 1988; 61 FR 1843, Jan. 24, 1996]

[1] See footnote 1 to §393.24(c).

[1] See footnote 1 to §393.24(c).

§ 393.26 Requirements for reflectors.

(a) *Mounting.* All required reflectors shall be mounted upon the motor vehicle at a height not less than 15 inches nor more than 60 inches above the ground on which the motor vehicle stands, except that reflectors shall be mounted as high as practicable on motor vehicles which are so constructed as to make compliance with the 15-inch requirement impractical. They shall be so installed as to perform their function adequately and reliably, and except for temporary reflectors required for vehicles in driveaway-towaway operations, or on projecting loads, all reflectors shall be permanently and securely mounted in workmanlike manner so as to provide the maximum of stability and the minimum likelihood of damage. Required reflectors otherwise properly mounted may be securely installed on flexible strapping or belting provided that under conditions of normal operation they reflect light in the required directions. Required temporary reflectors mounted on motor vehicles during the time they are in transit in any driveaway-towaway operation must be firmly attached.

(b) *Specifications.* All required reflectors except those installed on vehicles tendered for transportation in driveaway and towaway operations shall comply with FMVSS 571.108 (49 CFR 571.108) in effect at the time the vehicle was manufactured or the current FMVSS 571.108 requirements.

(c) *Certification and markings.* All reflectors required to conform to the specifications in paragraph (b) shall be certified by the manufacturer or supplier that they do so conform, by marking with the manufacturer's or supplier's name or trade name and the letters ''SAE-A''. The marking in each case shall be visible when the reflector is in place on the vehicle.

(d) *Retroreflective surfaces.* Retroreflective surfaces other than required reflectors may be used, provided:

(1) Designs do not resemble traffic control signs, lights, or devices, except that straight edge striping resembling a barricade pattern may be used.

(2) Designs do not tend to distort the length and/or width of the motor vehicle.

(3) Such surfaces shall be at least 3 inches from any required lamp or reflector unless of the same color as such lamp or reflector.

(4) No red color shall be used on the front of any motor vehicle, except for display of markings or placards required by § 177.823 of this title.

(5) Retroreflective license plates required by State or local authorities may be used.

[33 FR 19735, Dec. 25, 1968, as amended at 35 FR 3167, Feb. 19, 1970; 53 FR 49397, Dec. 7, 1988]

§ 393.27 Wiring specifications.

(a) Wiring for both low voltage (tension) and high voltage (tension) circuits shall be constructed and installed so as to meet design requirements. Wiring shall meet or exceed, both mechanically and electrically, the following SAE Standards as found in the 1985 edition of the SAE Handbook:

(1) Commercial vehicle engine ignition systems-SAE J557-High Tension Ignition Cable.

(2) Commercial vehicle battery cable-SAE J1127-Jan 80-Battery Cable.

(3) Other commercial vehicle wiring-SAE J1128-Low Tension Primary Cable.

(b) The source of power and the electrical wiring shall be of such size and characteristics as to provide the necessary voltage as the design requires to comply with FMVSS 571.108.

(c) Lamps shall be properly grounded.

NOTE: This shall not prohibit the use of the frame or other metal parts of a motor vehicle as a return ground system provided truck-tractor semitrailer/full trailer combinations are electrically connected.

[53 FR 49397, Dec. 7, 1988]

§ 393.28 Wiring to be protected.

(a) The wiring shall—

(1) Be so installed that connections are protected from weather, abrasion, road splash, grease, oil, fuel and chafing;

(2) Be grouped together, when possible, and protected by nonconductive tape, braid, or other covering capable of withstanding severe abrasion or

shall be protected by being enclosed in a sheath or tube;

(3) Be properly supported in a manner to prevent chafing;

(4) Not be so located as to be likely to be charred, overheated, or enmeshed in moving parts;

(5) Not have terminals or splices located above the fuel tank except for the fuel sender wiring and terminal; and

(6) Be protected when passing through holes in metal by a grommet, or other means, or the wiring shall be encased in a protective covering.

(b) The complete wiring system including lamps, junction boxes, receptacle boxes, conduit and fittings must be weather resistant.

(c) Harness connections shall be accomplished by a mechanical means.

[53 FR 49397, Dec. 7, 1988]

§ 393.29 Grounds.

The battery ground and trailer return ground connections on a grounded system shall be readily accessible. The contact surfaces of electrical connections shall be clean and free of oxide, paint, or other nonconductive coating.

§ 393.30 Battery installation.

Every storage battery on every vehicle, unless located in the engine compartment, shall be covered by a fixed part of the motor vehicle or protected by a removable cover or enclosure. Removable covers or enclosures shall be substantial and shall be securely latched or fastened. The storage battery compartment and adjacent metal parts which might corrode by reason of battery leakage shall be painted or coated with an acid-resisting paint or coating and shall have openings to provide ample battery ventilation and drainage. Wherever the cable to the starting motor passes through a metal compartment, the cable shall be protected against grounding by an acid and waterproof insulating bushing. Wherever a battery and a fuel tank are both placed under the driver's seat, they shall be partitioned from each other, and each compartment shall be provided with an independent cover, ventilation, and drainage.

§ 393.31 Overload protective devices.

(a) The current to all low tension circuits shall pass through overload protective devices except that this requirement shall not be applicable to battery-to-starting motor or battery-to-generator circuits, ignition and engine control circuits, horn circuits, electrically-operated fuel pump circuits, or electric brake circuits.

(b) Trucks, truck-tractors, and buses meeting the definition of a commercial motor vehicle and manufactured after June 30, 1953 shall have protective devices for electrical circuits arranged so that:

(1) The headlamp circuit or circuits shall not be affected by a short circuit in any other lighting circuits on the motor vehicle; or

(2) The protective device shall be an automatic reset overload circuit breaker if the headlight circuit is protected in common with other circuits.

[33 FR 19735, Dec. 25, 1968, as amended at 53 FR 49397, Dec. 7, 1988]

§ 393.32 Detachable electrical connections.

Electrical wiring between towing and towed vehicles shall be contained in a cable or cables or entirely within another substantially constructed protective device. All such electrical wiring shall be mechanically and electrically adequate and free of short or open circuits. Suitable provision shall be made in every such detachable connection to afford reasonable assurance against connection in an incorrect manner or accidental disconnection. Detachable connections made by twisting together wires from the towed and towing units are prohibited. Precaution shall be taken to provide sufficient slack in the connecting wire or cable to accommodate without damage all normal motions of the parts to which they are attached.

§ 393.33 Wiring, installation.

Electrical wiring shall be systematically arranged and installed in a workmanlike manner. All detachable wiring, except temporary wiring connections for driveaway-towaway operations, shall be attached to posts or terminals by means of suitable cable

terminals which conform to the SAE Standard[1] for ''Cable Terminals'' or by cable terminals which are mechanically and electrically at least equal to such terminals. The number of wires attached to any post shall be limited to the number which such post was designed to accommodate. The presence of bare, loose, dangling, chafing, or poorly connected wires is prohibited.

Subpart C—Brakes

§ 393.40 Required brake systems.

(a) *General.* A bus, truck, truck tractor, or a combination of motor vehicles must have brakes adequate to control the movement of, and to stop and hold, the vehicle or combination of vehicles.

(b) *Specific systems required.* (1) A bus, truck, truck tractor, or combination of motor vehicles must have—

(i) A service brake system that conforms to the requirements of § 393.52; and

(ii) A parking brake system that conforms to the requirements of § 393.41.

(2) A bus, truck, truck tractor, or a combination of motor vehicles manufactured on or after July 1, 1973, must have an emergency brake system that conforms to the requirements of § 393.52(b) and consists of either—

(i) Emergency features of the service brake system; or

(ii) A system separate from the service brake system.

A control by which the driver applies the emergency brake system must be located so that the driver can readily operate it when he/she is properly restrained by any seat belt assembly provided for his/her use. The control for applying the emergency brake system may be combined with either the control for applying the service brake system or the control for applying the parking brake system. However, all three controls may not be combined.

(c) *Interconnected systems.* (1) If the brake systems specified in paragraph (b) of this section are interconnected in any way, they must be designed, constructed, and maintained so that, upon the failure of any part of the operating mechanism of one or more of the systems (except the service brake actuation pedal or valve)—

(i) The vehicle will have operative brakes; and

(ii) In the case of a vehicle manufactured on or after July 1, 1973, the vehicle will have operative brakes capable of performing as specified in § 393.52(b).

(2) A motor vehicle to which the emergency brake system requirements of Federal Motor Vehicle Safety Standard No. 105 (§ 571.105 of this title) applied at the time of its manufacture conforms to the requirements of paragraph (c)(1) of this section if—

(i) It is maintained in conformity with the emergency brake requirements of Standard No. 105 in effect on the date of its manufacture; and

(ii) It is capable of performing as specified in § 393.52(b), except upon structural failure of its brake master cylinder body or effectiveness indicator body.

(3) A bus conforms to the requirements of paragraph (c)(1) of this section if it meets the requirements of § 393.44 and is capable of performing as specified in § 393.52(b).

[36 FR 20297, Oct. 20, 1971, as amended at 37 FR 5251, Mar. 11, 1972]

§ 393.41 Parking brake system.

(a) Every commercial motor vehicle manufactured on and after March 7, 1990, except an agricultural commodity trailer, converter dolly, heavy hauler or pulpwood trailer, shall at all times be equipped with a parking brake system adequate to hold the vehicle or combination under any condition of loading as required by FMVSS 571.121. An agricultural commodity trailer, heavy hauler or pulpwood trailer shall carry sufficient chocking blocks to prevent movement when parked.

(b) The parking brake system shall at all times be capable of being applied in conformance with the requirements of paragraph (a) of the section by either the driver's muscular effort, or by spring action, or by other energy, provided, that if such other energy is depended on for application of the parking brake, then an accumulation of such energy shall be isolated from any common source and used exclusively for the operation of the parking brake.

[1] See footnote 1 to § 393.24(c).

(c) The parking brake system shall be held in the applied position by energy other than fluid pressure, air pressure, or electric energy. The parking brake system shall be such that it cannot be released unless adequate energy is available upon release of the parking brake to make immediate further application with the required effectiveness.

[34 FR 15418, Oct. 3, 1969, as amended at 53 FR 49398, Dec. 7, 1988]

§ 393.42 Brakes required on all wheels.

(a) Every commercial motor vehicle shall be equipped with brakes acting on all wheels.

(b) *Exception*. (1) Trucks or truck tractors having three or more axles—

(i) Need not have brakes on the front wheels if the vehicle was manufactured before July 25, 1980; or

(ii) Manufactured between July 24, 1980, and October 27, 1986, must be retrofitted to meet the requirements of this section within one year from February 26, 1987, if the brake components have been removed.

(2) Any motor vehicle being towed in a driveaway-towaway operation must have operative brakes as may be necessary to ensure compliance with the performance requirements of § 393.52. This paragraph is not applicable to any motor vehicle towed by means of a tow-bar when any other vehicle is full-mounted on such towed motor vehicle or any combination of motor vehicles utilizing three or more saddle-mounts. (See § 393.71(a)(3).)

(3) Any full trailer, any semitrailer, or any pole trailer having a GVWR of 3,000 pounds or less must be equipped with brakes if the weight of the towed vehicle resting on the towing vehicle exceeds 40 percent of the GVWR of the towing vehicle.

(Diagrams to illustrate § 393.42 for brake requirements for light trailers.)

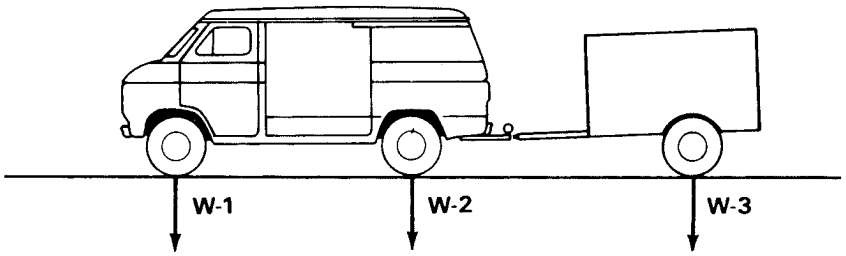

(Semitrailer or 2-wheel pole trailer of 3,000 pounds gross weight or less must be equipped with brakes if W-3 is greater than 40 percent of the sum of W-1 and W-2.)

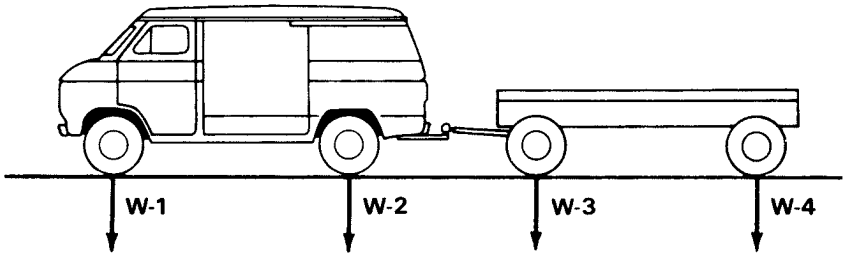

(Full trailer or 4-wheel pole trailer of 3,000 pounds gross weight or less must be equipped with brakes if the sum of W-3 and W-4 is greater than 40 percent of the sum of W-1 and W-2.)

[52 FR 2803, Jan. 27, 1987, as amended at 53 FR 49398, Dec. 7, 1988; 54 FR 48617, Nov. 24, 1989; 59 FR 25574, May 17, 1994; 61 FR 1843, Jan. 24, 1996]

§ 393.43 Breakaway and emergency braking.

(a) Every motor vehicle, if used to tow a trailer equipped with brakes, shall be equipped with means for providing that in case of breakaway of such trailer the service brakes on the towing vehicle will be sufficiently operative to stop the towing vehicle.

(b) Every truck or truck tractor equipped with air brakes, when used for towing other vehicles equipped with air brakes, shall be equipped with two means of activating the emergency features of the trailer brakes. One of these means shall operate automatically in the event of reduction of the towing vehicle air supply to a fixed pressure which shall not be lower than 20 pounds per square inch nor higher than 45 pounds per square inch. The other means shall be a manually controlled device readily operable by a person seated in the driving seat. Its emergency position or method of operation shall be clearly indicated. In no instance may the manual means be so arranged as to permit its use to prevent operation of the automatic means. The automatic and manual means required by this section may be, but are not required to be, separate.

(c) Every truck tractor and truck when used for towing other vehicles equipped with vacuum brakes, shall have, in addition to the single control required by § 393.49 to operate all brakes of the combination, a second manual control device which can be

used to operate the brakes on the towed vehicles in emergencies. Such second control shall be independent of brake air, hydraulic, and other pressure, and independent of other controls, unless the braking system be so arranged that failure of the pressure on which the second control depends will cause the towed vehicle brakes to be applied automatically. The second control is not required by this rule to provide modulated or graduated braking.

(d) Every trailer required to be equipped with brakes shall be equipped with brakes of such character as to be applied automatically and promptly upon breakaway from the towing vehicle, and means shall be provided to maintain application of the brakes on the trailer in such case for at least 15 minutes.

(e) Air brake systems installed on towed vehicles shall be so designed, by the use of ''no-bleed-back'' relay emergency valves or equivalent devices, that the supply reservoir used to provide air for brakes shall be safeguarded against backflow of air to the towing vehicle upon reduction of the towing vehicle air pressure.

(f) The requirements of paragraphs (b), (c), and (d) of this section shall not be applicable to motor vehicles in driveaway-towaway operations.

§ 393.44 Front brake lines, protection.

On every bus, if equipped with air brakes, the braking system shall be so constructed that in the event any brake line to any of the front wheels is broken, the driver can apply the brakes on the rear wheels despite such breakage. The means used to apply the brakes may be located forward of the driver's seat as long as it can be operated manually by the driver when the driver is properly restrained by any seat belt assembly provided for use. Every bus shall meet this requirement or comply with the regulations in effect at the time of its manufacture.

[53 FR 49400, Dec. 7, 1988]

§ 393.45 Brake tubing and hose, adequacy.

(a) *General requirements.* Brake tubing and brake hose must—

(1) Be designed and constructed in a manner that insures proper, adequate, and continued functioning of the tubing or hose;

(2) Be installed in a manner that insures proper continued functioning of the tubing or hose;

(3) Be long and flexible enough to accommodate without damage all normal motions of the parts to which it is attached;

(4) Be suitably secured against chafing, kinking, or other mechanical damage;

(5) Be installed in a manner that prevents it from contacting the vehicle's exhaust system or any other source of high temperatures; and

(6) Conform to the applicable requirements of paragraph (b) or (c) of this section. In addition, all hose installed on and after January 1, 1981, must conform to those applicable subsections of FMVSS 106 (49 CFR 571.106).

(b) *Special requirements for metallic brake tubing, nonmetallic brake tubing, coiled nonmetallic brake tubing and brake hose.* (1) Metallic brake tubing, nonmetallic brake tubing, coiled nonmetallic brake tubing, and brake hose installed on a commercial motor vehicle on and after March 7, 1989, must meet or exceed one of the following specifications set forth in the SAE Handbook, 1985 edition:

(i) Metallic Air Brake Tubing—SAE Recommended Practice J1149—Metallic Air Brake System Tubing and Pipe—July 76.

(ii) Nonmetallic Air Brake Tubing—SAE Recommended Practice J844—Nonmetallic Air Brake System Type B—OCT 80.

(iii) Air Brake Hose—SAE Recommended Practice J1402—Automotive Air Brake Hose and Hose Assemblies—JUN 85.

(iv) Hydraulic Brake Hose—SAE Recommended Practice J1401 Road Vehicle-Hydraulic Brake Hose Assemblies for Use with Non-Petroleum Base Hydraulic Fluid JUN 85.

(v) Vacuum Brake Hose—SAE Recommended Practice J1403 Vacuum Brake Hose JUN 85.

(2) Except as provided in paragraph (c) of this section, brake hose and brake tubing installed on a motor vehicle before March 7, 1989, must conform to 49 CFR 393.45 effective October 31, 1983.

(c) *Nonmetallic brake tubing.* Coiled nonmetallic brake tubing may be used for connections between towed and towing vehicles or between the frame of a towed vehicle and the unsprung subframe of an adjustable axle of that vehicle if—

(1) The coiled tubing has a straight segment (pigtail) at each end that is at least 2 inches in length and is encased in a spring guard or similar device which prevents the tubing from kinking at the fitting at which it is attached to the vehicle; and

(2) The spring guard or similar device has at least 2 inches of closed coils or similar surface at its interface with the fitting and extends at least 1½ inches into the coiled segment of the tubing from its straight segment.

(d) *Brake tubing and brake hose, uses.* Metallic and nonmetallic brake tubing is intended for use in areas of the brake system where relative movement in the line is not anticipated. Brake hose and coiled nonmetallic brake tubing is intended for use in the brake system where substantial relative movement in the line is anticipated or the hose/coiled nonmetallic brake tubing is exposed to potential tension or impact such as between the frame and axle in a conventional type suspension system (axle attached to frame by suspension system). Nonmetallic brake tubing may be used through an articulation point provided movement is less than 4.5 degrees in a vertical plane, and 7.4 degrees in a transverse horizontal plane.

(49 U.S.C. 304, 1655; 49 CFR 1.48(b) and 301.60)

[38 FR 4333, Feb. 13, 1973, as amended at 44 FR 25457, May 1, 1979; 45 FR 46424, July 10, 1980; 47 FR 47837, Oct. 28, 1982; 53 FR 49400, Dec. 7, 1988]

§ 393.46 Brake tubing and hose connections.

All connections for air, vacuum, or hydraulic braking systems shall:

(a) Be adequate in material and construction to insure proper continued functioning;

(b) Be designed, constructed, and installed so as to insure, when properly connected, an attachment free of leaks, constrictions, or other defects;

(c) Have suitable provision in every detachable connection to afford reasonable assurance against accidental disconnection;

(d) Have the vacuum brake engine manifold connection at least three-eighths inch in diameter.

(e) If installed on a vehicle on or after January 1, 1981, meet requirements under applicable subsections of FMVSS 106 (49 CFR 571.106).

(f) Splices in tubing if installed on a vehicle after March 7, 1989, must use fittings that meet the requirements of SAE Standard J512–OCT 80 Automotive Tube Fittings or for air brake systems SAE J246—March 81 Spherical and Flanged Sleeve (Compression) Tube Fittings as found in the SAE Handbook 1985 edition.

[33 FR 19735, Dec. 28, 1968, as amended at 44 FR 25457, May 1, 1979; 53 FR 49400, Dec. 7, 1988]

§ 393.47 Brake lining.

The brake lining on every motor vehicle shall be so constructed and installed as not to be subject to excessive fading and grabbing and shall be adequate in thickness, means of attachment, and physical characteristics to provide for safe and reliable stopping of the motor vehicle.

§ 393.48 Brakes to be operative.

(a) *General rule.* Except as provided in paragraphs (b) and (c) of this section, all brakes with which a motor vehicle is equipped must at all times be capable of operating.

(b) *Devices to reduce or remove front-wheel braking effort.* A motor vehicle may be equipped with a device to reduce the braking effort upon its front wheels or, in the case of a three-axle truck or truck tractor manufactured before March 1, 1975, to remove the braking effort upon its front wheels, if that device conforms to, and is used in compliance with, the rules in paragraph (b) (1) or (2) of this section.

(1) *Manually operated devices.* A manually operated device to reduce or remove the front-wheel braking effort must not be—

(i) Installed in a motor vehicle other than a bus, truck, or truck tractor; or

(ii) Installed in a bus, truck, or truck tractor manufactured after February 28, 1975; or

(iii) Used in the reduced mode except when the vehicle is operating under adverse conditions such as wet, snowy, or icy roads.

(2) *Automatic devices.* An automatic device to reduce the front-wheel braking effort by up to 50 percent of the normal braking force, regardless of whether or not antilock system failure has occurred on any axle, must not—

(i) Be operable by the driver except upon application of the control that activates the braking system; and

(ii) Be operable when the pressure that transmits brake control application force exceeds—

(A) 85 psig on air-mechanical braking systems; or

(B) 85 percent of the maximum system pressure in the case of vehicles utilizing other than compressed air.

(c) *Towed vehicle.* Paragraph (a) of this section does not apply to—

(1) A disabled vehicle being towed; or

(2) A vehicle being towed in a driveaway-towaway operation which is exempt from the general rule of § 393.42 under paragraph (b) of that section.

(Sec. 204 of the Interstate Commerce Act, as amended (49 U.S.C. 304); sec. 6 of the Department of Transportation Act (49 U.S.C. 1655), and the delegations of authority by the Secretary of Transportation and the Federal Highway Administrator at 49 CFR 1.48 and 301.60, respectively)

[39 FR 26907, July 24, 1974, as amended at 41 FR 29130, July 15, 1976; 41 FR 53031, Dec. 3, 1976]

§ 393.49 Single valve to operate all brakes.

Every motor vehicle, the date of manufacture of which is subsequent to June 30, 1953, which is equipped with power brakes, shall have the braking system so arranged that one application valve shall when applied operate all the service brakes on the motor vehicle or combination of motor vehicles. This requirement shall not be construed to prohibit motor vehicles from being equipped with an additional valve to be used to operate the brakes on a trailer or trailers or as provided in § 393.44. This section shall not be applicable to driveaway-towaway operations unless the brakes on such operations are designed to be operated by a single valve.

§ 393.50 Reservoirs required.

(a) *General.* Every commercial motor vehicle using air or vacuum for breaking shall be equipped with reserve capacity or a reservoir sufficient to ensure a full service brake application with the engine stopped without depleting the air pressure or vacuum below 70 percent of that pressure or degree of vacuum indicated by the gauge immediately before the brake application is made. For purposes of this section, a full service brake application is considered to be made when the service brake pedal is pushed to the limit of its travel.

(b) *Safeguarding of air and vacuum.* (1) Every bus, truck, and truck tractor, when equipped with air or vacuum reservoirs and regardless of date of manufacture, shall have such reservoirs so safeguarded by a check valve or equivalent device that in the event of failure or leakage in its connection to the source of compressed air or vacuum the air or vacuum supply in the reservoir shall not be depleted by the leak or failure.

(2) Means shall be provided to establish the check valve to be in working order. On and after May 1, 1966, means other than loosening or disconnection of any connection between the source of compressed air or vacuum and the check valve, and necessary tools for operation of such means, shall be provided to prove that the check valve is in working order. The means shall be readily accessible either from the front, side, or rear of the vehicle, or from the driver's compartment.

(i) In air brake systems with one reservoir, the means shall be a cock, valve, plug, or equivalent device arranged to vent a cavity having free communication with the connection between the check valve and the source of compressed air or vacuum.

(ii) Where air is delivered by a compressor into one tank or compartment (wet tank), and air for braking is taken directly from another tank or compartment (dry tank) only, with the required check valve between the tanks or compartments, a manually operated drain cock on the first (wet) tank or compartment will serve as a means herein required if it conforms to the requirements herein.

(iii) In vacuum systems stopping the engine will serve as the required means, the system remaining evacuated as indicated by the vacuum gauge.

[33 FR 19735, Dec. 25, 1968, as amended at 53 FR 49400, Dec. 7, 1988]

§ 393.51 Warning devices and gauges.

(a) *General.* In the manner and to the extent specified in paragraphs (b), (c), (d), and (e) of this section, a bus, truck, or truck tractor must be equipped with a signal that provides a warning to the driver when a failure occurs in the vehicle's service brake system.

(b) *Hydraulic brakes.* A vehicle manufactured on or after July 1, 1973, and having service brakes activated by hydraulic fluid must be equipped with a warning signal that performs as follows:

(1) If Federal Motor Vehicle Safety Standard No. 105 (§ 571.105 of this title) was applicable to the vehicle at the time it was manufactured, the warning signal must conform to the requirements of that standard.

(2) If Federal Motor Vehicle Safety Standard No. 105 (§ 571.105) was not applicable to the vehicle at the time it was manufactured, the warning signal must become operative, before or upon application of the brakes in the event of a hydraulic-type complete failure of a partial system. The signal must be readily audible or visible to the driver.

(c) *Air brakes.* A vehicle (regardless of the date it was manufactured) having service brakes activated by compressed air (air-mechanical brakes) or a vehicle towing a vehicle having service brakes activated by compressed air (air-mechanical brakes) must be equipped, and perform, as follows:

(1) The vehicle must have a low air pressure warning device that conforms to the requirements of either paragraph (c)(1) (i) or (ii) of this section.

(i) If Federal Motor Vehicle Safety Standard No. 121 (§ 571.121 of this title) was applicable to the vehicle at the time it was manufactured, the warning device must conform to the requirements of that standard.

(ii) If Federal Motor Vehicle Safety Standard No. 121 (§ 571.121) was not applicable to the vehicle at the time it was manufactured, the vehicle must have a device that provides a readily audible or visible continuous warning to the driver whenever the pressure of the compressed air in the braking system is below a specified pressure, which must be at least one-half of the compressor governor cutout pressure.

(2) The vehicle must have a pressure gauge which indicates to the driver the pressure in pounds per square inch available for braking.

(d) *Vacuum brakes.* A vehicle (regardless of the date it was manufactured) having service brakes activated by vacuum or a vehicle towing a vehicle having service brakes activated by vacuum must be equipped with—

(1) A device that provides a readily audible or visible continuous warning to the driver whenever the vacuum in the vehicle's supply reservoir is less than 8 inches of mercury; and

(2) A vacuum gauge which indicates to the driver the vacuum in inches of mercury available for braking.

(e) *Hydraulic brakes applied or assisted by air or vacuum.* A vehicle having a braking system in which hydraulically activated service brakes are applied or assisted by compressed air or vacuum must be equipped with both a warning signal that conforms to the requirements of paragraph (b) of this section and a warning device that conforms to the requirements of either paragraph (c) or paragraph (d) of this section.

(f) *Maintenance.* The warning signals, devices, and gauges required by this section must be maintained in operative condition.

[37 FR 5251, Mar. 11, 1972, as amended at 53 FR 49400, Dec. 7, 1988]

§ 393.52 Brake performance.

(a) Upon application of its service brakes, a motor vehicle or combination of motor vehicles must under any condition of loading in which it is found on a public highway, be capable of—

(1) Developing a braking force at least equal to the percentage of its gross weight specified in the table in paragraph (d) of this section;

(2) Decelerating to a stop from 20 miles per hour at not less than the rate specified in the table in paragraph (d) of this section; and

(3) Stopping from 20 miles per hour in a distance, measured from the point at which movement of the service brake

pedal or control begins, that is not greater than the distance specified in the table in paragraph (d) of this section.

(b) Upon application of its emergency brake system and with no other brake system applied, a motor vehicle or combination of motor vehicles must, under any condition of loading in which it is found on a public highway, be capable of stopping from 20 miles per hour in a distance, measured from the point at which movement of the emergency brake control begins, that is not greater than the distance specified in the table in paragraph (d) of this section.

(c) Conformity to the stopping-distance requirements of paragraphs (a) and (b) of this section shall be determined under the following conditions:

(1) Any test must be made with the vehicle on a hard surface that is substantially level, dry, smooth, and free of loose material.

(2) The vehicle must be in the center of a 12-foot-wide lane when the test begins and must not deviate from that lane during the test.

(d) Vehicle brake performance table:

Type of motor vehicle	Service brake systems			Emergency brake systems
	Braking force as a percentage of gross vehicle or combination weight	Deceleration in feet per second per second	Application and braking distance in feet from initial speed of 20 m.p.h.	Application and braking distance in feet from initial speed of 20 m.p.h.
A. Passenger-carrying vehicles.				
(1) Vehicles with a seating capacity of 10 persons or less, including driver, and built on a passenger car chassis	65.2	21	20	54
(2) Vehicles with a seating capacity of more than 10 persons, including driver, and built on a passenger car chassis; vehicles built on a truck or bus chassis and having a manufacturer's GVWR of 10,000 pounds or less	52.8	17	25	66
(3) All other passenger-carrying vehicles	43.5	14	35	85
B. Property-carrying vehicles.				
(1) Single unit vehicles having a manufacturer's GVWR of 10,000 pounds or less	52.8	17	25	66
(2) Single unit vehicles having a manufacturer's GVWR of more than 10,000 pounds, except truck tractors. Combinations of a 2-axle towing vehicle and trailer having a GVWR of 3,000 pounds or less. All combinations of 2 or less vehicles in driveaway or towaway operation	43.4	14	35	85
(3) All other property-carrying vehicles and combinations of property-carrying vehicles	43.5	14	40	90

NOTE: (a) There is a definite mathematical relationship between the figures in columns 2 and 3. If the decelerations set forth in column 3 are divided by 32.2 feet per second per second, the figures in column 2 will be obtained. (For example, 21 divided by 32.2 equals 65.2 percent.) Column 2 is included in the tabulation because certain brake-testing devices utilize this factor.

(b) The decelerations specified in column 3 are an indication of the effectiveness of the basic brakes, and as measured in practical brake testing are the maximum decelerations attained at some time during the stop. These decelerations as measured in brake tests cannot be used to compute the values in column 4 because the deceleration is not sustained at the same rate over the entire period of the stop. The deceleration increases from zero to a maximum during a period of brake-system application and brake-force buildup. Also, other factors may cause the deceleration to decrease after reaching a maximum. The added distance which results because maximum deceleration is not sustained is included in the figures in column 4 but is not indicated by the usual brake-testing devices for checking deceleration.

(c) The distances in column 4 and the decelerations in column 3 are not directly related. ''Brake-system application and braking distance in feet'' (column 4) is a definite measure of the overall effectiveness of the braking system, being the distance traveled between the point at which the driver starts to move the braking controls and the point at which the vehicle comes to rest. It includes distance traveled while the brakes are being applied and distance traveled while the brakes are retarding the vehicle.

(d) The distance traveled during the period of brake-system application and brake-force buildup varies with vehicle type, being negligible for many passenger cars and greatest for combinations of commercial vehicles. This fact accounts for the variation from 20 to 40 feet in the values in column 4 for the various classes of vehicles.

(e) The terms ''GVWR'' and ''GVW'' refer to the manufacturer's gross vehicle rating and the actual gross vehicle weight, respectively.

[36 FR 20298, Oct. 20, 1971, as amended at 37 FR 5251, Mar. 11, 1972; 37 FR 11336, June 7, 1972]

§ 393.53 Automatic brake adjusters and brake adjustment indicators.

(a) *Automatic brake adjusters (hydraulic brake systems).* Each commercial motor vehicle manufactured on or after October 20, 1993, and equipped with a hydraulic brake system, shall meet the automatic brake adjustment system

requirements of Federal Motor Vehicle Safety Standard No. 105 (49 CFR 571.105, S5.1) applicable to the vehicle at the time it was manufactured.

(b) *Automatic brake adjusters (air brake systems).* Each commercial motor vehicle manufactured on or after October 20, 1994, and equipped with an air brake system shall meet the automatic brake adjustment system requirements of Federal Motor Vehicle Safety Standard No. 121 (49 CFR 571.121, S5.1.8) applicable to the vehicle at the time it was manufactured.

(c) *Brake adjustment indicator (air brake systems).* On each commercial motor vehicle manufactured on or after October 20, 1994, and equipped with an air brake system which contains an external automatic adjustment mechanism and an exposed pushrod, the condition of service brake under-adjustment shall be displayed by a brake adjustment indicator conforming to the requirements of Federal Motor Vehicle Safety Standard No. 121 (49 CFR 571.121, S5.1.8) applicable to the vehicle at the time it was manufactured.

[60 FR 46245, Sept. 6, 1995]

Subpart D—Glazing and Window Construction

§ 393.60 Glazing in specified openings.

(a) *Kind of glass.* (1) Glazing utilized or installed in the windshield, window, door, or any other opening into a bus, truck, or truck tractor, except vehicles engaged in armored car service, shall conform to the requirements contained in the ''American Standard Safety Code for Safety Glazing Materials for Motor Vehicles Operating on Land Highways,'' with the effective dates shown in paragraph (a)(2) of this section.

(2) Table of Glazing Requirements and Effective Dates:

Vehicles manufactured	Must comply with		
	Z 26.1–1950	Z 26.1–1950 as supplemented by Z 26.1a–1964	Z 26.1–1966 as supplemented by Z 26.1a–1969
Before January 1, 1966	x		
From January 1, 1966 to December 31, 1980		x	
On and after January 1, 1981			x

(b) *Windshield condition.* Every motor vehicle windshield shall be free of discoloration or other damage in that portion thereof extending upward from the height of the topmost portion of the steering wheel, but not including a 2 inch border at the top and a 1 inch border at each side of the windshield or each panel thereof, except that discoloration and damage as follows are allowable:

(1) Coloring or tinting applied in manufacture, for reduction of glare;

(2) Any crack not over ¼-inch wide, if not intersected by any other crack;

(3) Any damaged area which can be covered by a disc ¾-inch in diameter, if not closer than 3 inches to any other such damaged area.

(c) *Use of vision-reducing matter.* No motor vehicle may be operated with any label, sticker, decalcomania, or other vision-reducing matter covering any portion of its windshield or windows at either side of the driver's compartment, except that stickers required by law may be affixed at the bottom of the windshield, provided no portion of any label, sticker, decalcomania, or other vision-reducing matter may extend upward more than 4½ inches from the bottom of such windshield.

[33 FR 19735, Dec. 25, 1968, as amended at 41 FR 53031, Dec. 3, 1976; 44 FR 25457, May 1, 1979; 44 FR 31982, June 4, 1979]

§ 393.61 Window construction.

(a) *Windows in trucks and truck tractors.* Every truck and truck tractor, except vehicles engaged in armored car service, shall have, in addition to the area provided by the windshield, at least one window on each side of the driver's compartment, which window shall have sufficient area to contain either an ellipse having a major axis of 18 inches and a minor axis of 13 inches or an opening containing 200 square

inches formed by a rectangle 13 inches by 17¾ inches with corner arcs of 6-inch maximum radius. The major axis of the ellipse and the long axis of the rectangle shall not make an angle of more than 45 degrees with the surface on which the unladen vehicle stands; however, if the cab is designed with a folding door or doors or with clear openings where doors or windows are customarily located, then no windows shall be required in such locations.

(b) *Bus windows.* (1) Except as provided in paragraph (b)(3) of this section a bus manufactured before September 1, 1973, having a seating capacity of more than eight persons shall have, in addition to the area provided by the windshield, adequate means of escape for passengers through windows. The adequacy of such means shall be determined in accordance with the following standards: For each seated passenger space provided, inclusive of the driver there shall be at least 67 square inches of glazing if such glazing is not contained in a push-out window; or at least 67 square inches of free opening resulting from opening of a push-out type window. No area shall be included in this minimum prescribed area unless it will provide an unobstructed opening sufficient to contain an ellipse having a major axis of 18 inches and a minor axis of 13 inches or an opening containing 200 square inches formed by a rectangle 13 inches by 17¾ inches with corner arcs of 6-inch maximum radius. The major axis of the elipse and the long axis of the rectangle shall make an angle of not more than 45° with the surface on which the unladen vehicle stands. The area shall be measured either by removal of the glazing if not of the push-out type or of the movable sash if of the push-out type, and it shall be either glazed with laminated safety glass or comply with paragraph (c) of this section. No less than 40 percent of such prescribed glazing or opening shall be on one side of any bus.

(2) A bus, including a school bus, manufactured on and after September 1, 1973, having a seating capacity of more than 10 persons shall have emergency exits in conformity with Federal Motor Vehicle Safety Standard No. 217, part 571 of this title.

(3) A bus manufactured before September 1, 1973, may conform to Federal Motor Vehicle Safety Standard No. 217, part 571 of this title, in lieu of conforming to paragraph (b)(1) of this section.

(c) *Push-out window requirements.* (1) Except as provided in paragraph (c)(3) of this section, every glazed opening in a bus manufactured before September 1, 1973, and having a seating capacity of more than eight persons, used to satisfy the requirements of paragraph (b)(1) of this section, if not glazed with laminated safety glass, shall have a frame or sash so designed, constructed, and maintained that it will yield outwardly to provide the required free opening when subjected to the drop test specified in Test 25 of the American Standard Safety Code referred to in §393.60. The height of drop required to open such push-out windows shall not exceed the height of drop required to break the glass in the same window when glazed with the type of laminated glass specified in Test 25 of the Code. The sash for such windows shall be constructed of such material and be of such design and construction as to be continuously capable of complying with the above requirement.

(2) On a bus manufactured on and after September 1, 1973, having a seating capacity of more than 10 persons, each push-out window shall conform to Federal Motor Vehicle Safety Standard No. 217, (§571.217) of this title.

(3) A bus manufactured before September 1, 1973, may conform to Federal Motor Vehicle Safety Standard No. 217 (§571.217) of this title, in lieu of conforming to paragraph (c)(1) of this section.

[33 FR 19735, Dec. 25, 1968, as amended at 37 FR 11677, June 10, 1972]

§393.62 Window obstructions.

Windows, if otherwise capable of complying with §393.61 (a) and (b), shall not be obstructed by bars or other such means located either inside or outside such windows such as would hinder the escape of occupants unless such bars or other such means are so constructed as to provide a clear opening, at least equal to the opening provided by the window to which it is adjacent, when subjected to the same test specified in §393.61(c). The point of application of

such test force shall be such as will be most likely to result in the removal of the obstruction.

§ 393.63 Windows, markings.

(a) On a bus manufactured before September 1, 1973, each bus push-out window and any other bus escape window glazed with laminated safety glass required in § 393.61 shall be identified as such by clearly legible and visible signs, lettering, or decalcomania. Such marking shall include appropriate wording to indicate that it is an escape window and also the method to be used for obtaining emergency exit.

(b) On a bus manufactured on and after September 1, 1973, emergency exits required in § 393.61 shall be marked to conform to Federal Motor Vehicle Safety Standard No. 217 (§ 571.217), of this title.

(c) A bus manufactured before September 1, 1973, may mark emergency exits to conform to Federal Motor Vehicle Safety Standard No. 217 (§ 571.217), of this title in lieu of conforming to paragraph (a) of this section.

[37 FR 11678, June 10, 1972]

Subpart E—Fuel Systems

AUTHORITY: Sec. 204, Interstate Commerce Act, as amended, 49 U.S.C. 304; sec. 6, Department of Transportation Act, 49 U.S.C. 1655; delegation of authority at 49 CFR 1.48 and 389.4.

§ 393.65 All fuel systems.

(a) *Application of the rules in this section.* The rules in this section apply to systems for containing and supplying fuel for the operation of motor vehicles or for the operation of auxiliary equipment installed on, or used in connection with, motor vehicles.

(b) *Location.* Each fuel system must be located on the motor vehicle so that—

(1) No part of the system extends beyond the widest part of the vehicle;

(2) No part of a fuel tank is forward of the front axle of a power unit;

(3) Fuel spilled vertically from a fuel tank while it is being filled will not contact any part of the exhaust or electrical systems of the vehicle, except the fuel level indicator assembly;

(4) Fill pipe openings are located outside the vehicle's passenger compartment and its cargo compartment;

(5) A fuel line does not extend between a towed vehicle and the vehicle that is towing it while the combination of vehicles is in motion; and

(6) No part of the fuel system of a bus manufactured on or after January 1, 1973, is located within or above the passenger compartment.

(c) *Fuel tank installation.* Each fuel tank must be securely attached to the motor vehicle in a workmanlike manner.

(d) *Gravity or syphon feed prohibited.* A fuel system must not supply fuel by gravity or syphon feed directly to the carburetor or injector.

(e) *Selection control valve location.* If a fuel system includes a selection control valve which is operable by the driver to regulate the flow of fuel from two or more fuel tanks, the valve must be installed so that either—

(1) The driver may operate it while watching the roadway and without leaving his/her driving position; or

(2) The driver must stop the vehicle and leave his/her seat in order to operate the valve.

(f) *Fuel lines.* A fuel line which is not completely enclosed in a protective housing must not extend more than 2 inches below the fuel tank or its sump. Diesel fuel crossover, return, and withdrawal lines which extend below the bottom of the tank or sump must be protected against damage from impact. Every fuel line must be—

(1) Long enough and flexible enough to accommodate normal movements of the parts to which it is attached without incurring damage; and

(2) Secured against chafing, kinking, or other causes of mechanical damage.

(g) *Excess flow valve.* When pressure devices are used to force fuel from a fuel tank, a device which prevents the flow of fuel from the fuel tank if the fuel feed line is broken must be installed in the fuel system.

[36 FR 15445, Aug. 14, 1971, as amended at 37 FR 4341, Mar. 2, 1972; 37 FR 28752, Dec. 29, 1972]

§ 393.67 Liquid fuel tanks.

(a) *Application of the rules in this section.* (1) A liquid fuel tank manufactured on or after January 1, 1973, and a side-mounted gasoline tank must conform to all the rules in this section.

(2) A diesel fuel tank manufactured before January 1, 1973, and mounted on a bus must conform to the rules in paragraphs (c)(7)(iii) and (d)(2) of this section.

(3) A diesel fuel tank manufactured before January 1, 1973, and mounted on a vehicle other than a bus must conform to the rules in paragraph (c)(7)(iii) of this section.

(4) A gasoline tank, other than a side-mounted gasoline tank, manufactured before January 1, 1973, and mounted on a bus must conform to the rules in paragraphs (c) (1) through (10) and (d)(2) of this section.

(5) A gasoline tank, other than a side-mounted gasoline tank, manufactured before January 1, 1973, and mounted on a vehicle other than a bus must conform to the rules in paragraphs (c) (1) through (10), inclusive, of this section.

(6) Private motor carrier of passengers. Motor carriers engaged in the private transportation of passengers may continue to operate a commercial motor vehicle which was not subject to this section or 49 CFR 571.301 at the time of its manufacture, provided the fuel tank of such vehicle is maintained to the original manufacturer's standards.

(b) *Definitions.* As used in this section—

(1) The term *liquid fuel tank* means a fuel tank designed to contain a fuel that is liquid at normal atmospheric pressures and temperatures.

(2) A *side-mounted* fuel tank is a liquid fuel tank which—

(i) If mounted on a truck tractor, extends outboard of the vehicle frame and outside of the plan view outline of the cab; or

(ii) If mounted on a truck, extends outboard of a line parallel to the longitudinal centerline of the truck and tangent to the outboard side of a front tire in a straight ahead position. In determining whether a fuel tank on a truck or truck tractor is side-mounted, the fill pipe is not considered a part of the tank.

(c) *Construction of liquid fuel tanks*—(1) *Joints.* Joints of a fuel tank body must be closed by arc-, gas-, seam-, or spot-welding, by brazing, by silver soldering, or by techniques which provide heat resistance and mechanical securement at least equal to those specifically named. Joints must not be closed solely by crimping or by soldering with a lead-based or other soft solder.

(2) *Fittings.* The fuel tank body must have flanges or spuds suitable for the installation of all fittings.

(3) *Threads.* The threads of all fittings must be Dryseal American Standard Taper Pipe Thread or Dryseal SAE Short Taper Pipe Thread, specified in Society of Automotive Engineers Standard J476, as contained in the 1971 edition of the ''SAE Handbook,'' except that straight (nontapered) threads may be used on fittings having integral flanges and using gaskets for sealing. At least four full threads must be in engagement in each fitting.

(4) *Drains and bottom fittings.* (i) Drains or other bottom fittings must not extend more than three-fourths of an inch below the lowest part of the fuel tank or sump.

(ii) Drains or other bottom fittings must be protected against damage from impact.

(iii) If a fuel tank has drains the drain fittings must permit substantially complete drainage of the tank.

(iv) Drains or other bottom fittings must be installed in a flange or spud designed to accommodate it.

(5) *Fuel withdrawal fittings.* Except for diesel fuel tanks, the fittings through which fuel is withdrawn from a fuel tank must be located above the normal level of fuel in the tank when the tank is full.

(6) [Reserved]

(7) *Fill pipe.* (i) Each fill pipe must be designed and constructed to minimize the risk of fuel spillage during fueling operations and when the vehicle is involved in a crash.

(ii) The fill pipe and vents of a fuel tank having a capacity of more than 25 gallons of fuel must permit filling the tank with fuel at a rate of at least 20 gallons per minute without fuel spillage.

(iii) Each fill pipe must be fitted with a cap that can be fastened securely over the opening in the fill pipe. Screw threads or a bayonet-type joint are methods of conforming to the requirements of this subdivision.

(8) *Safety venting system.* A liquid fuel tank with a capacity of more than 25 gallons of fuel must have a venting system which, in the event the tank is subjected to fire, will prevent internal tank pressure from rupturing the tank's body, seams, or bottom opening (if any).

(9) *Pressure resistance.* The body and fittings of a liquid fuel tank with a capacity of more than 25 gallons of fuel must be capable of withstanding an internal hydrostatic pressure equal to 150 percent of the maximum internal pressure reached in the tank during the safety venting systems test specified in paragraph (d)(1) of this section.

(10) *Air vent.* Each fuel tank must be equipped with a nonspill air vent (such as a ball check). The air vent may be combined with the fill-pipe cap or safety vent, or it may be a separate unit installed on the fuel tank.

(11) *Markings.* If the body of a fuel tank is readily visible when the tank is installed on the vehicle, the tank must be plainly marked with its liquid capacity. The tank must also be plainly marked with a warning against filling it to more than 95 percent of its liquid capacity.

(12) *Overfill restriction.* A liquid fuel tank manufactured on or after January 1, 1973, must be designed and constructed so that—

(i) The tank cannot be filled, in a normal filling operation, with a quantity of fuel that exceeds 95 percent of the tank's liquid capacity; and

(ii) When the tank is filled, normal expansion of the fuel will not cause fuel spillage.

(d) *Liquid fuel tank tests.* Each liquid fuel tank must be capable of passing the tests specified in paragraphs (d) (1) and (2) of this section.[1]

(1) *Safety venting system test*—(i) *Procedure.* Fill the tank three-fourths full with fuel, seal the fuel feed outlet, and invert the tank. When the fuel temperature is between 50° F. and 80° F., apply an enveloping flame to the tank so that the temperature of the fuel rises at a rate of not less than 6° F. and not more than 8° F. per minute.

(ii) *Required performance.* The safety venting system required by paragraph (c)(8) of this section must activate before the internal pressure in the tank exceeds 50 pounds per square inch, gauge, and the internal pressure must not thereafter exceed the pressure at which the system activated by more than five pounds per square inch despite any further increase in the temperature of the fuel.

(2) *Leakage test*—(i) *Procedure.* Fill the tank to capacity with fuel having a temperature between 50° F. and 80° F. With the fill-pipe cap installed, turn the tank through an angle of 150° in any direction about any axis from its normal position.

(ii) *Required performance.* Neither the tank nor any fitting may leak more than a total of one ounce by weight of fuel per minute in any position the tank assumes during the test.

(e) *Side-mounted liquid fuel tank tests.* Each side-mounted liquid fuel tank must be capable of passing the tests specified in paragraphs (e) (1) and (2) of this section and the tests specified in paragraphs (d) (1) and (2) of this section.[1]

(1) *Drop test*—(i) *Procedure.* Fill the tank with a quantity of water having a weight equal to the weight of the maximum fuel load of the tank and drop the tank 30 feet onto an unyielding surface so that it lands squarely on one corner.

(ii) *Required performance.* Neither the tank nor any fitting may leak more than a total of 1 ounce by weight of water per minute.

(2) *Fill-pipe test*—(i) *Procedure.* Fill the tank with a quantity of water having a weight equal to the weight of the maximum fuel load of the tank and drop the tank 10 feet onto an unyielding surface so that it lands squarely on its fill-pipe.

(ii) *Required performance.* Neither the tank nor any fitting may leak more than a total of 1 ounce by weight of water per minute.

[1] The specified tests are a measure of performance only. Manufacturers and carriers may use any alternative procedures which assure that their equipment meets the required performance criteria.

(f) *Certification and markings.* Each liquid fuel tank shall be legibly and permanently marked by the manufacturer with the following minimum information:

(1) The month and year of manufacture,

(2) The manufacturer's name on tanks manufactured on and after July 1, 1988, and means of identifying the facility at which the tank was manufactured, and

(3) A certificate that it conforms to the rules in this section applicable to the tank. The certificate must be in the form set forth in either of the following:

(i) If a tank conforms to all rules in this section pertaining to side-mounted fuel tanks: ''Meets all FHWA side-mounted tank requirements.''

(ii) If a tank conforms to all rules in this section pertaining to tanks which are not side-mounted fuel tanks: ''Meets all FHWA requirements for non-side-mounted fuel tanks.''

(iii) The form of certificate specified in paragraph (f)(3) (i) or (ii) of this section may be used on a liquid fuel tank manufactured before July 11, 1973, but it is not mandatory for liquid fuel tanks manufactured before March 7, 1989. The form of certification manufactured on or before March 7, 1989, must meet the requirements in effect at the time of manufacture.

[36 FR 15445, Aug. 14, 1971, as amended at 37 FR 4341, Mar. 2, 1972; 37 FR 28753, Dec. 29, 1972; 45 FR 46424, July 10, 1980; 53 FR 49400, Dec. 7, 1988; 59 FR 8753, Feb. 23, 1994]

§ 393.69 Liquefied petroleum gas systems.

(a) A fuel system that uses liquefied petroleum gas as a fuel for the operation of a motor vehicle or for the operation of auxiliary equipment installed on, or used in connection with, a motor vehicle must conform to the ''Standards for the Storage and Handling of Liquefied Petroleum Gases'' of the National Fire Protection Association, Battery March Park, Quincy, MA 02269, as follows:

(1) A fuel system installed before December 31, 1962, must conform to the 1951 edition of the Standards.

(2) A fuel system installed on or after December 31, 1962, and before January 1, 1973, must conform to Division IV of the June 1959 edition of the Standards.

(3) A fuel system installed on or after January 1, 1973, and providing fuel for propulsion of the motor vehicle must conform to Division IV of the 1969 edition of the Standards.

(4) A fuel system installed on or after January 1, 1973, and providing fuel for the operation of auxiliary equipment must conform to Division VII of the 1969 edition of the Standards.

(b) When the rules in this section require a fuel system to conform to a specific edition of the Standards, the fuel system may conform to the applicable provisions in a later edition of the Standards specified in this section.

(c) The tank of a fuel system must be marked to indicate that the system conforms to the Standards.

[36 FR 15445, Aug. 14, 1971, as amended at 37 FR 4342, Mar. 2, 1972; 41 FR 53031, Dec. 3, 1976; 53 FR 49400, Dec. 7, 1988]

Subpart F—Coupling Devices and Towing Methods

§ 393.70 Coupling devices and towing methods, except for driveaway-towaway operations.

(a) *Tracking.* When two or more vehicles are operated in combination, the coupling devices connecting the vehicles shall be designed, constructed, and installed, and the vehicles shall be designed and constructed, so that when the combination is operated in a straight line on a level, smooth, paved surface, the path of the towed vehicle will not deviate more than 3 inches to either side of the path of the vehicle that tows it.

(b) *Fifth wheel assemblies*—(1) *Mounting*—(i) *Lower half.* The lower half of a fifth wheel mounted on a truck tractor or converter dolly must be secured to the frame of that vehicle with properly designed brackets, mounting plates or angles and properly tightened bolts of adequate size and grade, or devices that provide equivalent security. The installation shall not cause cracking, warping, or deformation of the frame. The installation must include a device for positively preventing the lower half of the fifth wheel from shifting on the frame to which it is attached.

(ii) *Upper half.* The upper half of a fifth wheel must be fastened to the motor vehicle with at least the same security required for the installation of the lower half on a truck tractor or converter dolly.

(2) *Locking.* Every fifth wheel assembly must have a locking mechanism. The locking mechanism, and any adapter used in conjunction with it, must prevent separation of the upper and lower halves of the fifth wheel assembly unless a positive manual release is activated. The release may be located so that the driver can operate it from the cab. If a motor vehicle has a fifth wheel designed and constructed to be readily separable, the fifth wheel locking devices shall apply automatically on coupling.

(3) *Location.* The lower half of a fifth wheel shall be located so that, regardless of the condition of loading, the relationship between the kingpin and the rear axle or axles of the towing motor vehicle will properly distribute the gross weight of both the towed and towing vehicles on the axles of those vehicles, will not unduly interfere with the steering, braking, and other maneuvering of the towing vehicle, and will not otherwise contribute to unsafe operation of the vehicles comprising the combination. The upper half of a fifth wheel shall be located so that the weight of the vehicles is properly distributed on their axles and the combination of vehicles will operate safely during normal operation.

(c) *Towing of full trailers.* A full trailer must be equipped with a tow-bar and a means of attaching the tow-bar to the towing and towed vehicles. The tow-bar and the means of attaching it must—

(1) Be structurally adequate for the weight being drawn;

(2) Be properly and securely mounted;

(3) Provide for adequate articulation at the connection without excessive slack at that location; and

(4) Be provided with a locking device that prevents accidental separation of the towed and towing vehicles. The mounting of the trailer hitch (pintle hook or equivalent mechanism) on the towing vehicle must include reinforcement or bracing of the frame sufficient to produce strength and rigidity of the frame to prevent its undue distortion.

(d) *Safety devices in case of tow-bar failure or disconnection.* Every full trailer and every converter dolly used to convert a semitrailer to a full trailer must be coupled to the frame, or an extension of the frame, of the motor vehicle which tows it with one or more safety devices to prevent the towed vehicle from breaking loose in the event the tow-bar fails or becomes disconnected. The safety device must meet the following requirements:

(1) The safety device must not be attached to the pintle hook or any other device on the towing vehicle to which the tow-bar is attached. However, if the pintle hook or other device was manufactured prior to July 1, 1973, the safety device may be attached to the towing vehicle at a place on a pintle hook forging or casting if that place is independent of the pintle hook.

(2) The safety device must have no more slack than is necessary to permit the vehicles to be turned properly.

(3) The safety device, and the means of attaching it to the vehicles, must have an ultimate strength of not less than the gross weight of the vehicle or vehicles being towed.

(4) The safety device must be connected to the towed and towing vehicles and to the tow-bar in a manner which prevents the tow-bar from dropping to the ground in the event it fails or becomes disconnected.

(5) Except as provided in paragraph (d)(6) of this section, if the safety device consists of safety chains or cables, the towed vehicle must be equipped with either two safety chains or cables or with a bridle arrangement of a single chain or cable attached to its frame or axle at two points as far apart as the configuration of the frame or axle permits. The safety chains or cables shall be either two separate pieces, each equipped with a hook or other means for attachment to the towing vehicle, or a single piece leading along each side of the tow-bar from the two points of attachment on the towed vehicle and arranged into a bridle with a single means of attachment to be connected to the towing vehicle. When a single length of cable is used, a thimble and twin-base cable clamps shall be used to

form the forward bridle eye. The hook or other means of attachment to the towing vehicle shall be secured to the chains or cables in a fixed position.

(6) If the towed vehicle is a converter dolly with a solid tongue and without a hinged tow-bar or other swivel between the fifth wheel mounting and the attachment point of the tongue eye or other hitch device—

(i) Safety chains or cables, when used as the safety device for that vehicle, may consist of either two chains or cables or a single chain or cable used alone;

(ii) A single safety device, including a single chain or cable used alone as the safety device, must be in line with the centerline of the trailer tongue; and

(iii) The device may be attached to the converter dolly at any point to the rear of the attachment point of the tongue eye or other hitch device.

(7) Safety devices other than safety chains or cables must provide strength, security of attachment, and directional stability equal to, or greater than, safety chains or cables installed in accordance with paragraphs (d) (5) and (6) of this section.

(8) When two safety devices, including two safety chains or cables, are used and are attached to the towing vehicle at separate points, the points of attachment on the towing vehicle shall be located equally distant from, and on opposite sides of, the centerline of the towing vehicle. Where two chains or cables are attached to the same point on the towing vehicle, and where a bridle or a single chain or cable is used, the point of attachment must be on the longitudinal centerline of the towing vehicle. A single safety device, other than a chain or cable, must also be attached to the towing vehicle at a point on its longitudinal centerline.

[37 FR 21439, Oct. 11, 1972]

§ 393.71 Coupling devices and towing methods, driveaway-towaway operations.

(a) *Number in combination.* (1) No more than three saddle-mounts may be used in any combination.

(2) No more than one tow-bar may be used in any combination.

(3) When motor vehicles are towed by means of triple saddle-mounts, the towed vehicles shall have brakes acting on all wheels which are in contact with the roadway.

(b) *Carrying vehicles on towing vehicle.* (1) When adequately and securely attached by means equivalent in security to that provided in paragraph (j)(2) of this section, a motor vehicle or motor vehicles may be full-mounted on the structure of a towing vehicle engaged in any driveaway-towaway operation.

(2) No motor vehicle or motor vehicles may be full-mounted on a towing vehicle unless the relationship of such full-mounted vehicles to the rear axle or axles results in proper distribution of the total gross weight of the vehicles and does not unduly interfere with the steering, braking, or maneuvering of the towing vehicle, or otherwise contribute to the unsafe operation of the vehicles comprising the combination.

(c) *Carrying vehicles on towed vehicles.* (1) When adequately and securely attached by means equivalent in security to that provided in paragraph (j)(2) of this section, a motor vehicle or motor vehicles may be full-mounted on the structure of towed vehicles engaged in any driveaway-towaway operation.

(2) No motor vehicle shall be full-mounted on a motor vehicle towed by means of a tow-bar unless the towed vehicle is equipped with brakes and is provided with means for effective application of brakes acting on all wheels and is towed on its own wheels.

(3) No motor vehicle or motor vehicles shall be full-mounted on a motor vehicle towed by means of a saddle-mount unless the center line of the kingpin or equivalent means of attachment of such towed vehicle shall be so located on the towing vehicle that the relationship to the rear axle or axles results in proper distribution of the total gross weight of the vehicles and does not unduly interfere with the steering, braking, or maneuvering of the towing vehicle or otherwise contribute to the unsafe operation of vehicles comprising the combination; and unless a perpendicular to the ground from the center of gravity of the full-mounted vehicles lies forward of the center line of the rear axle of the saddle-mounted vehicle.

(4) If a motor vehicle towed by means of a double saddle-mount has any vehicle full-mounted on it, such saddle-mounted vehicle shall at all times while so loaded have effective brakes acting on those wheels which are in contact with the roadway.

(d) *Bumper tow-bars on heavy vehicles prohibited.* Tow-bars of the type which depend upon the bumpers as a means of transmitting forces between the vehicles shall not be used to tow a motor vehicle weighing more than 5,000 pounds.

(e) *Front wheels of saddle-mounted vehicles restrained.* A motor vehicle towed by means of a saddle-mount shall have the motion of the front wheels restrained if under any condition of turning of such wheels they will project beyond the widest part of either the towed or towing vehicle.

(f) *Vehicles to be towed in forward position.* Unless the steering mechanism is adequately locked in a straight-forward position, all motor vehicles towed by means of a saddle-mount shall be towed with the front end mounted on the towing vehicle.

(g) *Means required for towing.* (1) No motor vehicle or motor vehicles shall be towed in driveaway-towaway operations by means other than tow-bar or saddle-mount connections which shall meet the requirements of this section.

(2) For the purpose of the regulations of this part:

(i) Coupling devices such as those used for towing house trailers and employing ball and socket connections shall be considered as tow-bars.

(ii) Motor vehicles or parts of motor vehicles adequately, securely, and rigidly attached by devices meeting the requirements of paragraph (n) of this section shall be considered as one vehicle in any position in any combination.

(h) *Requirements for tow-bars.* Tow-bars shall comply with the following requirements:

(1) *Tow-bars, structural adequacy and mounting.* Every tow-bar shall be structurally adequate and properly installed and maintained. To insure that it is structurally adequate, it must, at least, meet the requirements of the following table:

Gross weight of towed vehicle (pounds)[1]	Longitudinal strength in tension and compression[2]		
	All tow-bars	New tow-bars acquired and used by a motor carrier after Sept. 30, 1948	Strength as a beam (in any direction concentrated load at center)[2,3]
	Pounds		
Less than 5,000	3,000	6,500	3,000
5,000 and over	.....	.....	.....
Less than 10,000	6,000	([1])	([1])
10,000 and over	.....	.....	.....
Less than 15,000	9,000	([1])	([1])

[1] The required strength of tow-bars for towed vehicles of 15,000 pounds and over gross weight and of new tow-bars acquired and used after Sept. 30, 1948, for towed vehicles of 5,000 pounds and over gross weight shall be computed by means of the following formulae: Longitudinal strength=gross weight of towed vehicle x 1.3. Strength as a beam=gross weight of towed vehicle x 0.6.

[2] In testing, the whole unit shall be tested with all clamps, joints, and pins so mounted and fastened as to approximate conditions of actual operation.

[3] This test shall be applicable only to tow-bars which are, in normal operation, subjected to a bending movement such as tow-bars for house trailers.

(2) *Tow-bars, jointed.* The tow-bar shall be so constructed as to freely permit motion in both horizontal and vertical planes between the towed and towing vehicles. The means used to provide the motion shall be such as to prohibit the transmission of stresses under normal operation between the towed and towing vehicles, except along the longitudinal axis of the tongue or tongues.

(3) *Tow-bar fastenings.* The means used to transmit the stresses to the chassis or frames of the towed and towing vehicles may be either temporary structures or bumpers or other integral parts of the vehicles: *Provided, however,* That the means used shall be so constructed, installed, and maintained that when tested as an assembly, failure in such members shall not occur when the weakest new tow-bar which is permissible under paragraph (h)(1) of this section is subjected to the tests given therein.

(4) *Means of adjusting length.* On tow-bars, adjustable as to length, the means used to make such adjustment shall fit tightly and not result in any slackness or permit the tow-bar to bend. With the tow-bar supported rigidly at both ends and with a load of 50 pounds at the center, the sag, measured at the center, in any direction

shall not exceed 0.25 inch under any condition of adjustment as to length.

(5) *Method of clamping.* Adequate means shall be provided for securely fastening the tow-bar to the towed and towing vehicles.

(6) *Tow-bar connection to steering mechanism.* The tow-bar shall be provided with suitable means of attachment to and actuation of the steering mechanism, if any, of the towed vehicle. The attachment shall provide for sufficient angularity of movement of the front wheels of the towed vehicle so that it may follow substantially in the path of the towing vehicle without cramping the tow-bar. The tow-bar shall be provided with suitable joints to permit such movement.

(7) *Tracking.* The tow-bar shall be so designed, constructed, maintained, and mounted as to cause the towed vehicle to follow substantially in the path of the towing vehicle. Tow-bars of such design on in our condition as to permit the towed vehicle to deviate more than 3 inches to either side of the path of a towing vehicle moving in a straight line as measured from the center of the towing vehicle are prohibited.

(8) *Passenger car-trailer type couplings.* Trailer couplings used for driveaway-towaway operations of passenger car trailers shall conform to Society of Automotive Engineers Standard No. J684c, ''Trailer Couplings and Hitches—Automotive Type,'' July 1970.[1]

(9) *Marking tow-bars.* Every tow-bar acquired and used in driveaway-towaway operations by a motor carrier shall be plainly marked with the following certification of the manufacturer thereof (or words of equivalent meaning):

This tow-bar complies with the requirements of the Federal Highway Administration for (maximum gross weight for which tow-bar is manufactured) vehicles.
Allowable Maximum Gross Weight _____
Manufactured _____
(month and year)
by _____
(name of manufacturer)

Tow-bar certification manufactured before the effective date of this regulation must meet requirements in effect at the time of manufacture.

[1] See footnote 1 to § 393.24(c).

(10) *Safety devices in case of tow-bar failure or disconnection.* (i) The towed vehicle shall be connected to the towing vehicle by a safety device to prevent the towed vehicle from breaking loose in the event the tow-bar fails or becomes disconnected. When safety chains or cables are used as the safety device for that vehicle, at least two safety chains or cables meeting the requirements of paragraph (h)(10)(ii) of this section shall be used. The tensile strength of the safety device and the means of attachment to the vehicles shall be at least equivalent to the corresponding longitudinal strength for tow-bars required in the table of paragraph (h)(1) of this section. If safety chains or cables are used as the safety device, the required strength shall be the combined strength of the combination of chains and cables.

(ii) If chains or cables are used as the safety device, they shall be crossed and attached to the vehicles near the points of bumper attachments to the chassis of the vehicles. The length of chain used shall be no more than necessary to permit free turning of the vehicles. The chains shall be attached to the tow-bar at the point of crossing or as close to that point as is practicable.

(iii) A safety device other than safety chains or cables must provide strength, security of attachment, and directional stability equal to, or greater than, that provided by safety chains or cables installed in accordance with paragraph (h)(10)(ii) of this section. A safety device other than safety chains or cables must be designed, constructed, and installed so that, if the tow-bar fails or becomes disconnected, the tow-bar will not drop to the ground.

(i) [Reserved]

(j) *Requirements for upper-half of saddle-mounts.* The upper-half of any saddle-mount shall comply with the following requirements:

(1) *Upper-half connection to towed vehicle.* The upper-half shall be securely attached to the frame or axle of the towed vehicle by means of U-bolts or other means providing at least equivalent security.

(2) *U-bolts or other attachments.* U-bolts used to attach the upper half to the towed vehicle shall be made of steel rod, free of defects, so shaped as

to avoid at any point a radius of less than 1 inch: *Provided, however,* That a lesser radius may be utilized if the U-bolt is so fabricated as not to cause more than 5 percent reduction in cross-sectional area at points of curvature, in which latter event the minimum radius shall be one-sixteenth inch. U-bolts shall have a diameter not less than required by the following table:

DIAMETER OF U-BOLTS IN INCHES

Weight in pounds of heaviest towed vehicle	Double or triple saddle-mount			
	Front mount	Middle or front mount	Rear mount	Single saddle-mount[1]
Up to 5,000	0.625	0.5625	0.500	0.500
5,000 and over	0.6875	0.625	0.5625	0.5625

[1] The total weight of all the vehicles being towed shall govern. If other devices are used to accomplish the same purposes as U-bolts they shall have at least equivalent strength of U-bolts made of mild steel. Cast iron shall not be used for clamps or any other holding devices.

(3) U-*bolts and points of support, location.* The distance between the most widely separated U-bolts shall not be less than 9 inches. The distance between the widely separated points where the upper-half supports the towed vehicle shall not be less than 9 inches, except that saddle-mounts employing ball and socket joints shall employ a device which clamps the axle of the towed vehicle throughout a length of not less than 5 inches.

(4) *Cradle-type upper-halves, specifications.* Upper-halves of the cradle-type using vertical members to restrain the towed vehicle from relative movement in the direction of motion of the vehicles shall be substantially constructed and adequate for the purpose. Such cradle-mounts shall be equipped with at least one bolt or equivalent means to provide against relative vertical movement between the upper-half and the towed vehicle. Bolts, if used, shall be at least one-half inch in diameter. Devices using equivalent means shall have at least equivalent strength. The means used to provide against relative vertical motion between the upper-half and the towed vehicle shall be such as not to permit a relative motion of over one-half inch. The distance between the most widely separated points of support between the upper-half and the towed vehicle shall be at least 9 inches.

(5) *Lateral movement of towed vehicle.* (i) Towed vehicles having a straight axle or an axle having a drop of less than 3 inches, unless the saddle-mount is constructed in accordance with paragraph (m)(2) of this section, shall be securely fastened by means of chains or cables to the upper-half so as to insure against relative lateral motion between the towed vehicle and the upper-half. The chains or cables shall be at least 3/16-inch diameter and secured by bolts of at least equal diameter.

(ii) Towed vehicles with an axle with a drop of 3 inches or more, or connected by a saddle-mount constructed in accordance with paragraph (m)(2) of this section, need not be restrained by chains or cables provided that the upper-half is so designed as to provide against such relative motion.

(iii) Chains or cables shall not be required if the upper-half is so designed as positively to provide against lateral movement of the axle.

(k) *Requirements for lower half of saddle-mounts.* The lower half of any saddle-mount shall comply with the following requirements:

(1) U-*bolts or other attachments.* U-bolts used to attach the lower half to the towing vehicle shall be made of steel rod, free of defects, so shaped as to avoid at any point a radius of less than 1 inch: *Provided, however,* That a lesser radius may be utilized if the U-bolt is so fabricated as not to cause more than 5 percent reduction in cross-sectional area at points of curvature, in which latter event the minimum radius shall be one-sixteenth inch. U-bolts shall have a total cross-sectional area not less than as required by the following table:

TOTAL CROSS-SECTIONAL AREA OF U-BOLTS IN SQUARE INCHES

Weight in pounds of heaviest towed vehicle	Double or triple saddle-mount			
	Front mount	Middle or front mount	Rear mount	Single saddle-mount[1]
Up to 5,000	1.2	1.0	0.8	0.8
5,000 and over	1.4	1.2	1.0	1.0

[1] The total weight of all the vehicles being towed shall govern. If other devices are used to accomplish the same purposes as U-bolts they shall have at least equivalent strength of U-bolts made of mild steel. Cast iron shall not be used for clamps or any other holding devices.

(2) *Shifting.* Adequate provision shall be made by design and installation to provide against relative movement between the lower-half and the towing

vehicle especially during periods of rapid acceleration and deceleration. To insure against shifting, designs of the tripod type shall be equipped with adequate and securely fastened hold-back chains or similar devices.

(3) *Swaying.* (i) Adequate provision shall be made by design and installation to provide against swaying or lateral movement of the towed vehicle relative to the towing vehicle. To insure against swaying, lower-halves designed with cross-members attached to but separable from vertical members shall have such cross-members fastened to the vertical members by at least two bolts on each side. Such bolts shall be of at least equivalent cross-sectional area as those required for U-bolts for the corresponding saddle-mount as given in the table in paragraph (k)(1) of this section. The minimum distance between the most widely separated points of support of the cross-member by the vertical member shall be three inches as measured in a direction parallel to the longitudinal axis of the towing vehicle.

(ii) The lower-half shall have a bearing surface on the frame of the towing vehicle of such dimensions that the pressure exerted by the lower-half upon the frame of the towing vehicle shall not exceed 200 pounds per square inch under any conditions of static loading. Hardwood blocks or blocks of other suitable material, such as hard rubber, aluminum or brakelining, if used between the lower half and the frame of the towing vehicle shall be at least ½ inch thick, 3 inches wide, and a combined length of 6 inches.

(iii) Under no condition shall the highest point of support of the towed vehicle by the upper-half be more than 24 inches, measured vertically, above the top of the frame of the towing vehicle, measured at the point where the lower-half rests on the towing vehicle.

(4) *Wood blocks.* (i) Hardwood blocks of good quality may be used to build up the height of the front end of the towed vehicle, provided that the total height of such wood blocks shall not exceed 8 inches and not over two separate pieces are placed upon each other to obtain such height; however, hardwood blocks, not over 4 in number, to a total height not to exceed 14 inches, may be used if the total cross-sectional area of the U-bolts used to attach the lower-half of the towing vehicle is at least 50 percent greater than that required by the table contained in paragraph (k)(1) of this section, or, if other devices are used in lieu of U-bolts, they shall provide for as great a resistance to bending as is provided by the larger U-bolts above prescribed.

(ii) Hardwood blocks must be at least 4 inches in width and the surfaces between blocks or block and lower-half or block and upper-half shall be planed and so installed and maintained as to minimize any tendency of the towed vehicle to sway or rock.

(5) *Cross-member, general requirements.* The cross-member, which is that part of the lower-half used to distribute the weight of the towed vehicle equally to each member of the frame of the towing vehicle, if used, shall be structurally adequate and properly installed and maintained adequately to perform this function.

(6) *Cross-member, use of wood.* No materials, other than suitable metals, shall be used as the cross-member, and wood may not be used structurally in any manner that will result in its being subject to tensile stresses. Wood may be used in cross-members if supported throughout its length by suitable metal cross-members.

(7) *Lower half strength.* The lower half shall be capable of supporting the loads given in the following table. For the purpose of test, the saddle-mount shall be mounted as normally operated and the load applied through the upper half:

MINIMUM TEST LOAD IN POUNDS

Weight in pounds of heaviest towed vehicle	Double or triple saddle-mount			
	Front mount	Middle or front mount	Rear mount	Single saddle-mount[1]
Up to 5,000	15,000	10,000	5,000	5,000
5,000 and over	30,000	20,000	10,000	10,000

[1] The total weight of all the vehicles being towed shall govern.

(l) *Requirements for kingpins of saddle-mounts.* The kingpin of any saddle-mount shall comply with the following requirements:

(1) *Kingpin size.* (i) Kingpins shall be constructed of steel suitable for the purpose, free of defects, and having a

diameter not less than required by the following table:

DIAMETER OF SOLID KINGPIN IN INCHES

Weight in pounds of heaviest towed vehicle	Double or triple saddle-mount							
	Front mount		Middle or front mount		Rear mount		Single saddle-mount[1]	
	Mild steel	H.T.S.[2]	Mild steel	H.T.S.[2]	Mild steel	H.T.S.[2]	Mild steel	H.T.S.
Up to 5,000	1.125	1.000	1.000	0.875	0.875	0.750	0.875	0.750
5,000 and over	1.500	1.125	1.250	1.000	1.000	0.875	1.000	0.875

[1] The total weight of all the vehicles being towed shall govern.
[2] High-tensile steel is steel having a minimum ultimate strength of 65,000 pounds per square inch.

(ii) If a ball and socket joint is used in place of a kingpin, the diameter of the neck of the ball shall be at least equal to the diameter of the corresponding solid kingpin given in the above table. If hollow kingpins are used, the metallic cross-sectional area shall be at least equal to the cross-sectional area of the corresponding solid kingpin.

(2) *Kingpin fit.* If a kingpin bushing is not used, the king-pin shall fit snugly into the upper and lower-halves but shall not bind. Those portions of the upper or lower-halves in moving contact with the kingpin shall be smoothly machined with no rough or sharp edges. The bearing surface thus provided shall not be less in depth than the radius of the kingpin.

(3) *Kingpin bushing on saddle-mounts.* The kingpin of all new saddle-mounts acquired and used shall be snugly enclosed in a bushing at least along such length of the kingpin as may be in moving contact with either the upper or lower-halves. The bearing surface thus provided shall not be less in depth than the radius of the kingpin.

(4) *Kingpin to restrain vertical motion.* The kingpin shall be so designed and installed as to restrain the upper-half from moving in a vertical direction relative to the lower-half.

(m) *Additional requirements for saddle-mounts.* Saddle-mounts shall comply with the following requirements:

(1) *Bearing surface between upper and lower-halves.* The upper and lower-halves shall be so constructed and connected that the bearing surface between the two halves shall not be less than 16 square inches under any conditions of angularity between the towing and towed vehicles: *Provided, however,* That saddle-mounts using a ball and socket joint shall have a ball of such dimension that the static bearing load shall not exceed 800 pounds per square inch, based on the projected cross-sectional area of the ball: *And further provided,* That saddle-mounts having the upper-half supported by ball, taper, or roller-bearings shall not have such bearings loaded beyond the limits prescribed for such bearings by the manufacturer thereof. The upper-half shall rest evenly and smoothly upon the lower-half and the contact surfaces shall be lubricated and maintained so that there shall be a minimum of frictional resistance between the parts.

(2) *Saddle-mounts, angularity.* All saddle-mounts acquired and used shall provide for angularity between the towing and towed vehicles due to vertical curvatures of the highway. Such means shall not depend upon either the looseness or deformation of the parts of either the saddle-mount or the vehicles to provide for such angularity.

(3) *Tracking.* The saddle-mount shall be so designed, constructed, maintained, and installed that the towed vehicle or vehicles will follow substantially in the path of the towing vehicle without swerving. Towed vehicles shall not deviate more than 3 inches to either side of the path of the towing vehicle when moving in a straight line.

(4) *Prevention of frame bending.* Where necessary, provision shall be made to prevent the bending of the frame of the towing vehicle by insertion of suitable blocks inside the frame channel to prevent kinking. The saddle-mount shall

not be so located as to cause deformation of the frame by reason of cantilever action.

(5) *Extension of frame.* No saddle-mount shall be located at a point to the rear of the frame of a towing vehicle.

(6) *Nuts, secured.* All nuts used on bolts, U-bolts, king-pins, or in any other part of the saddle-mount shall be secured against accidental disconnection by means of cotter-keys, lock-washers, double nuts, safety nuts, or equivalent means. Parts shall be so designed and installed that nuts shall be fully engaged.

(7) *Inspection of all parts.* The saddle-mount shall be so designed that it may be disassembled and each separate part inspected for worn, bent, cracked, broken, or missing parts.

(8) *Saddle-mounts, marking.* Every new saddle-mount acquired and used in driveaway-towaway operations by a motor carrier shall have the upper-half and the lower-half separately marked with the following certification of the manufacturer thereof (or words of equivalent meaning).

This saddle-mount complies with the requirements of the Federal Highway Administration for vehicles up to 5,000 pounds (or over 5,000 pounds):

Manufactured _____
(Month and year)

by _____
(Name of manufacturer)

(n) *Requirements for devices used to connect motor vehicles or parts of motor vehicles together to form one vehicle*—(1) *Front axle attachment.* The front axle of one motor vehicle intended to be coupled with another vehicle as defined in paragraph (g)(2)(ii) of this section shall be attached with U-bolts meeting the requirements of paragraph (j)(2) of this section.

(2) *Rear axle attachment.* The rear axle of one vehicle shall be coupled to the frame of the other vehicle by means of a connecting device which when in place forms a rectangle. The device shall be composed of two pieces, top and bottom. The device shall be made of 4-inch by ½-inch steel bar bent to shape and shall have the corners reinforced with a plate at least 3 inches by ½ inch by 8 inches long. The device shall be bolted together with ¾-inch bolts and at least three shall be used on each side. Wood may be used as spacers to keep the frames apart and it shall be at least 4 inches square.

(Sec. 12, 80 Stat. 931; 49 U.S.C. 1651 note; section 6 of the Department of Transportation Act, 49 U.S.C. 1655, and the delegations of authority at 49 CFR 1.48 and 389.4)

[33 FR 19735, Dec. 25, 1968, as amended at 35 FR 10907, July 7, 1970; 37 FR 21440, Oct. 11, 1972; 53 FR 49400, Dec. 7, 1988]

Subpart G—Miscellaneous Parts and Accessories

§ 393.75 Tires.

(a) No motor vehicle shall be operated on any tire that (1) has body ply or belt material exposed through the tread or sidewall, (2) has any tread or sidewall separation, (3) is flat or has an audible leak, or (4) has a cut to the extent that the ply or belt material is exposed.

(b) Any tire on the front wheels of a bus, truck, or truck tractor shall have a tread groove pattern depth of at least 4/32 of an inch when measured at any point on a major tread groove. The measurements shall not be made where tie bars, humps, or fillets are located.

(c) Except as provided in paragraph (b) of this section, tires shall have a tread groove pattern depth of at least 2/32 of an inch when measured in a major tread groove. The measurement shall not be made where tie bars, humps or fillets are located.

(d) No bus shall be operated with regrooved, recapped or retreaded tires on the front wheels.

(e) No truck or truck tractor shall be operated with regrooved tires on the front wheels which have a load carrying capacity equal to or greater than that of 8.25–20 8 ply-rating tires.

(f) Tire load rating[1]. (1) General rule: No motor vehicle shall be operated with tires that carry a greater weight than that specified for the tires in any

[1] The load and cold inflation pressure imposed on the rim and wheel must not exceed the rim and wheel manufacturer's recommendations even though the tire may be approved for a higher load or inflation. Rims and wheels may be identified (stamped) with a maximum load and maximum cold inflation rating.

of the publications of the standardizing bodies listed in FMVSS 571.119 (49 CFR 571.119) and marked on the sidewall of the tire unless:

(i) The vehicle is being operated under the terms of a special permit issued by the State, and

(ii) The vehicle is being operated at a reduced speed that is appropriate to compensate for tire loading in excess of the manufacturer's normal rated capacity.

(2) Tire pressure. No motor vehicle shall be operated on a tire which has a cold inflation pressure less than that specified for the load being carried.

(3) If the inflation pressure of the tire has been increased by heat because of the recent operation of the vehicle, the cold inflation pressure shall be estimated by subtracting the inflation buildup factor shown in Table I from the measured inflation pressure.

TABLE I—INFLATION PRESSURE MEASUREMENT CORRECTION FOR HEAT

Average speed of tire in previous hour	Minimum inflation pressure buildup	
	Tires with 4,000 lb (1,814 kg) maximum load rating or less	Tires with over 4,000 lb (1,814 kg) load rating
41 to 55 mi/h 66 to 88.5 km/h).	5 lb/in^2 (0.36 bar)	15 lb/in^2 (1.07 bars).

(Sec. 204, 49 Stat. 546 as amended (49 U.S.C. 304); sec. 6, Pub. L. 89–670, 80 Stat. 937 (49 U.S.C. 1655); 49 CFR 1.48 and 49 CFR 301.60)

[34 FR 9344, June 13, 1969, as amended at 40 FR 44557, Sept. 29, 1975; 41 FR 36657, Aug. 31, 1976; 44 FR 25455, May 1, 1979; 44 FR 47938, Aug. 16, 1979; 53 FR 18057, May 19, 1988; 53 FR 49401, Dec. 7, 1988]

§ 393.76 Sleeper berths.

(a) *Dimensions*—(1) *Size.* A sleeper berth must be at least the following size:

Date of installation on motor vehicle	Length measured on centerline of longitudinal axis (inches)	Width measured on centerline of transverse axis (inches)	Height measured from highest point of top of mattress (inches)[1]
Before January 1, 1953	72	18	18
After December 31, 1952, and before October 1, 1975	75	21	21
After September 30, 1975	75	24	24

[1] In the case of a sleeper berth which utilizes an adjustable mechanical suspension system, the required clearance can be measured when the suspension system is adjusted to the height to which it would settle when occupied by a driver.

(2) *Shape.* A sleeper berth installed on a motor vehicle on or after January 1, 1953 must be of generally rectangular shape, except that the horizontal corners and the roof corners may be rounded to radii not exceeding 10½ inches.

(3) *Access.* A sleeper berth must be constructed so that an occupant's ready entrance to, and exit from, the sleeper berth is not unduly hindered.

(b) *Location.* (1) A sleeper berth must not be installed in or on a semitrailer or a full trailer other than a house trailer.

(2) A sleeper berth located within the cargo space of a motor vehicle must be securely compartmentalized from the remainder of the cargo space. A sleeper berth installed on or after January 1, 1953 must be located in the cab or immediately adjacent to the cab and must be securely fixed with relation to the cab.

(c) *Exit from the berth.* (1) Except as provided in paragraph (c)(2) of this section, there must be a direct and ready means of exit from a sleeper berth into the driver's seat or compartment. If the sleeper berth was installed on or after January 1, 1963, the exit must be a doorway or opening at least 18 inches high and 36 inches wide. If the sleeper berth was installed before January 1, 1963, the exit must have sufficient area to contain an ellipse having a major axis of 24 inches and a minor axis of 16 inches.

(2) A sleeper berth installed before January 1, 1953 must either:

(i) Conform to the requirements of paragraph (c)(1) of this section; or

(ii) Have at least two exits, each of which is at least 18 inches high and 21 inches wide, located at opposite ends of the vehicle and useable by the occupant without the assistance of any other person.

(d) *Communication with the driver.* A sleeper berth which is not located within the driver's compartment and has no direct entrance into the driver's compartment must be equipped with a means of communication between the occupant and the driver. The means of communication may consist of a telephone, speaker tube, buzzer, pull cord, or other mechanical or electrical device.

(e) *Equipment.* A sleeper berth must be properly equipped for sleeping. Its equipment must include:

(1) Adequate bedclothing and blankets; and

(2) Either:

(i) Springs and a mattress; or

(ii) An innerspring mattress; or

(iii) A cellular rubber or flexible foam mattress at least four inches thick; or

(iv) A mattress filled with a fluid and of sufficient thickness when filled to prevent ''bottoming-out'' when occupied while the vehicle is in motion.

(f) *Ventilation.* A sleeper berth must have louvers or other means of providing adequate ventilation. A sleeper berth must be reasonably tight against dust and rain.

(g) *Protection against exhaust and fuel leaks and exhaust heat.* A sleeper berth must be located so that leaks in the vehicle's exhaust system or fuel system do not permit fuel, fuel system gases, or exhaust gases to enter the sleeper berth. A sleeper berth must be located so that it will not be overheated or damaged by reason of its proximity to the vehicle's exhaust system.

(h) *Occupant restraint.* A motor vehicle manufactured on or after July 1, 1971, and equipped with a sleeper berth must be equipped with a means of preventing ejection of the occupant of the sleeper berth during deceleration of the vehicle. The restraint system must be designed, installed, and maintained to withstand a minimum total force of 6,000 pounds applied toward the front of the vehicle and parallel to the longitudinal axis of the vehicle.

[39 FR 14711, Apr. 26, 1974; 39 FR 17233, May 14, 1974, as amended at 53 FR 49401, Dec. 7, 1988]

§ 393.77 Heaters.

On every motor vehicle, every heater shall comply with the following requirements:

(a) *Prohibited types of heaters.* The installation or use of the following types of heaters is prohibited:

(1) *Exhaust heaters.* Any type of exhaust heater in which the engine exhaust gases are conducted into or through any space occupied by persons or any heater which conducts engine compartment air into any such space.

(2) *Unenclosed flame heaters.* Any type of heater employing a flame which is not fully enclosed, except that such heaters are not prohibited when used for heating the cargo of tank motor vehicles.

(3) *Heaters permitting fuel leakage.* Any type of heater from the burner of which there could be spillage or leakage of fuel upon the tilting or overturning of the vehicle in which it is mounted.

(4) *Heaters permitting air contamination.* Any heater taking air, heated or to be heated, from the engine compartment or from direct contact with any portion of the exhaust system; or any heater taking air in ducts from the outside atmosphere to be conveyed through the engine compartment, unless said ducts are so constructed and installed as to prevent contamination of the air so conveyed by exhaust or engine compartment gases.

(5) *Solid fuel heaters except wood charcoal.* Any stove or other heater employing solid fuel except wood charcoal.

(6) *Portable heaters.* Portable heaters shall not be used in any space occupied by persons except the cargo space of motor vehicles which are being loaded or unloaded.

(b) *Heater specifications.* All heaters shall comply with the following specifications:

(1) *Heating elements, protection.* Every heater shall be so located or protected as to prevent contact therewith by occupants, unless the surface temperature of the protecting grilles or of any exposed portions of the heaters, inclusive of exhaust stacks, pipes, or conduits shall be lower than would cause contact burns. Adequate protection shall be afforded against igniting parts of the vehicle or burning occupants by direct radiation. Wood charcoal heaters

shall be enclosed within a metal barrel, drum, or similar protective enclosure which enclosure shall be provided with a securely fastened cover.

(2) *Moving parts, guards.* Effective guards shall be provided for the protection of passengers or occupants against injury by fans, belts, or any other moving parts.

(3) *Heaters, secured.* Every heater and every heater enclosure shall be securely fastened to the vehicle in a substantial manner so as to provide against relative motion within the vehicle during normal usage or in the event the vehicle overturns. Every heater shall be so designed, constructed, and mounted as to minimize the likelihood of disassembly of any of its parts, including exhaust stacks, pipes, or conduits, upon overturn of the vehicle in or on which it is mounted. Wood charcoal heaters shall be secured against relative motion within the enclosure required by paragraph (c)(1) of this section, and the enclosure shall be securely fastened to the motor vehicle.

(4) *Relative motion between fuel tank and heater.* When either in normal operation or in the event of overturn, there is or is likely to be relative motion between the fuel tank for a heater and the heater, or between either of such units and the fuel lines between them, a suitable means shall be provided at the point of greatest relative motion so as to allow this motion without causing failure of the fuel lines.

(5) *Operating controls to be protected.* On every bus designed to transport more than 15 passengers, including the driver, means shall be provided to prevent unauthorized persons from tampering with the operating controls. Such means may include remote control by the driver; installation of controls at inaccessible places; control of adjustments by key or keys; enclosure of controls in a locked space, locking of controls, or other means of accomplishing this purpose.

(6) *Heater hoses.* Hoses for all hot water and steam heater systems shall be specifically designed and constructed for that purpose.

(7) *Electrical apparatus.* Every heater employing any electrical apparatus shall be equipped with electrical conductors, switches, connectors, and other electrical parts of ample current-carrying capacity to provide against overheating; any electric motor employed in any heater shall be of adequate size and so located that it will not be overheated; electrical circuits shall be provided with fuses and/or circuit breakers to provide against electrical overloading; and all electrical conductors employed in or leading to any heater shall be secured against dangling, chafing, and rubbing and shall have suitable protection against any other condition likely to produce short or open circuits.

NOTE: Electrical parts certified as proper for use by Underwriters' Laboratories, Inc., shall be deemed to comply with the foregoing requirements.

(8) *Storage battery caps.* If a separate storage battery is located within the personnel or cargo space, such battery shall be securely mounted and equipped with nonspill filler caps.

(9) *Combustion heater exhaust construction.* Every heater employing the combustion of oil, gas, liquefied petroleum gas, or any other combustible material shall be provided with substantial means of conducting the products of combustion to the outside of the vehicle: *Provided, however,* That this requirement shall not apply to heaters used solely to heat the cargo space of motor vehicles where such motor vehicles or heaters are equipped with means specifically designed and maintained so that the carbon monoxide concentration will never exceed 0.2 percent in the cargo space. The exhaust pipe, stack, or conduit if required shall be sufficiently substantial and so secured as to provide reasonable assurance against leakage or discharge of products of combustion within the vehicle and, if necessary, shall be so insulated as to make unlikely the burning or charring of parts of the vehicle by radiation or by direct contact. The place of discharge of the products of combustion to the atmosphere and the means of discharge of such products shall be such as to minimize the likelihood of their reentry into the vehicle under all operating conditions.

(10) *Combustion chamber construction.* The design and construction of any combustion-type heater except cargo space heaters permitted by the proviso

of paragraph (c)(9) of this section and unenclosed flame heaters used for heating cargo of tank motor vehicles shall be such as to provide against the leakage of products of combustion into air to be heated and circulated. The material employed in combustion chambers shall be such as to provide against leakage because of corrosion, oxidation, or other deterioration. Joints between combustion chambers and the air chambers with which they are in thermal and mechanical contact shall be so designed and constructed as to prevent leakage between the chambers and the materials employed in such joints shall have melting points substantially higher than the maximum temperatures likely to be attained at the points of jointure.

(11) *Heater fuel tank location.* Every bus designed to transport more than 15 passengers, including the driver, with heaters of the combustion type shall have fuel tanks therefor located outside of and lower than the passenger space. When necessary, suitable protection shall be afforded by shielding or other means against the puncturing of any such tank or its connections by flying stones or other objects.

(12) *Heater, automatic fuel control.* Gravity or siphon feed shall not be permitted for heaters using liquid fuels. Heaters using liquid fuels shall be equipped with automatic means for shutting off the fuel or for reducing such flow of fuel to the smallest practicable magnitude, in the event of overturn of the vehicle. Heaters using liquefied petroleum gas as fuel shall have the fuel line equipped with automatic means at the source of supply for shutting off the fuel in the event of separation, breakage, or disconnection of any of the fuel lines between the supply source and the heater.

(13) *''Tell-tale'' indicators.* Heaters subject to paragraph (c)(14) of this section and not provided with automatic controls shall be provided with ''tell-tale'' means to indicate to the driver that the heater is properly functioning. This requirement shall not apply to heaters used solely for the cargo space in semitrailers or full trailers.

(14) *Shut-off control.* Automatic means, or manual means if the control is readily accessible to the driver without moving from the driver's seat, shall be provided to shut off the fuel and electrical supply in case of failure of the heater to function for any reason, or in case the heater should function improperly or overheat. This requirement shall not apply to wood charcoal heaters or to heaters used solely to heat the contents of cargo tank motor vehicles, but wood charcoal heaters must be provided with a controlled method of regulating the flow of combustion air.

(15) *Certification required.* Every combustion-type heater, except wood charcoal heaters, the date of manufacture of which is subsequent to December 31, 1952, and every wood charcoal heater, the date of manufacture of which is subsequent to September 1, 1953, shall be marked plainly to indicate the type of service for which such heater is designed and with a certification by the manufacturer that the heater meets the applicable requirements for such use. For example, ''Meets I.C.C. Bus Heater Requirements,'' Meets I.C.C. Flue-Vented Cargo Space Heater Requirements,'' and after December 31, 1967, such certification shall read ''Meets FHWA Bus Heater Requirements,'' ''Meets FHWA Flue-Vented Cargo Space Heater Requirements,'' etc.

(i) *Exception.* The certification for a catalytic heater which is used in transporting flammable liquid or gas shall be as prescribed under § 177.834(1) of this title.

[33 FR 19735, Dec. 25, 1968, as amended at 40 FR 51198, Nov. 4, 1975; 53 FR 49401, Dec. 7, 1988]

§ 393.78 Windshield wipers.

(a) Every bus, truck, and truck tractor, having a windshield, shall be equipped with at least two automatically-operating windshield wiper blades, one on each side of the centerline of the windshield, for cleaning rain, snow, or other moisture from the windshield and which shall be in such condition as to provide clear vision for the driver, unless one such blade be so arranged as to clean an area of the windshield extending to within 1 inch of the limit of vision through the windshield at each side: *Provided, however,* That in driveaway-towaway operations

this section shall apply only to the driven vehicle: *And provided further,* That one windshield wiper blade will suffice under this section when such driven vehicle in driveaway-towaway operation constitutes part or all of the property being transported and has no provision for two such blades.

(b) Every bus, truck, and truck tractor, the date of manufacture of which is subsequent to June 30, 1953, which depends upon vacuum to operate the windshield wipers, shall be so constructed that the operation of the wipers will not be materially impaired by change in the intake manifold pressure.

§ 393.79 Defrosting device.

Every bus, truck, and truck tractor having a windshield, when operating under conditions such that ice, snow, or frost would be likely to collect on the outside of the windshield or condensation on the inside of the windshield, shall be equipped with a device or other means, not manually operated, for preventing or removing such obstructions to the driver's view: *Provided, however,* That this section shall not apply in driveaway-towaway operations when the driven vehicle is a part of the shipment being delivered.

§ 393.80 Rear-vision mirrors.

(a) Every bus, truck, and truck tractor shall be equipped with two rear-vision mirrors, one at each side, firmly attached to the outside of the motor vehicle, and so located as to reflect to the driver a view of the highway to the rear, along both sides of the vehicle. All such regulated rear-vision mirrors and their replacements shall meet, as a minimum, the requirements of FMVSS No. 111 (49 CFR 571.111) in force at the time the vehicle was manufactured.

(b) *Exceptions.* (1) Mirrors installed on a vehicle manufactured prior to January 1, 1981, may be continued in service, provided that if the mirrors are replaced they shall be replaced with mirrors meeting, as a minimum, the requirements of FMVSS No. 111 (49 CFR 571.111) in force at the time the vehicle was manufactured.

(2) Only one outside mirror shall be required, which shall be on the driver's side, on trucks which are so constructed that the driver has a view to the rear by means of an interior mirror.

(3) In driveway-towaway operations, the driven vehicle shall have at least one mirror furnishing a clear view to the rear. (49 U.S.C. 3102; 49 CFR 1.48.)

[48 FR 57139, Dec. 28, 1983]

§ 393.81 Horn.

Every bus, truck, truck-tractor, and every driven motor vehicle in driveaway-towaway operations shall be equipped with a horn and actuating elements which shall be in such condition as to give an adequate and reliable warning signal.

§ 393.82 Speedometer.

Every bus, truck, and truck-tractor shall be equipped with a speedometer indicating vehicle speed in miles per hour, which shall be operative with reasonable accuracy; however, this requirement shall not apply to any driven vehicle which is part of a shipment being delivered in a driveaway-towaway operation if such driven vehicle is equipped with an effective means of limiting its maximum speed to 45 miles per hour, nor to any towed vehicle.

§ 393.83 Exhaust systems.

(a) Every motor vehicle having a device (other than as part of its cargo) capable of expelling harmful combustion fumes shall have a system to direct the discharge of such fumes. No part shall be located where its location would likely result in burning, charring, or damaging the electrical wiring, the fuel supply, or any combustible part of the motor vehicle.

(b) No exhaust system shall discharge to the atmosphere at a location immediately below the fuel tank or the fuel tank filler pipe.

(c) The exhaust system of a bus powered by a gasoline engine shall discharge to the atmosphere at or within 6 inches forward of the rearmost part of the bus.

(d) The exhaust system of a bus using fuels other than gasoline shall discharge to the atmosphere either:

(1) At or within 15 inches forward of the rearmost part of the vehicle; or

(2) To the rear of all doors or windows designed to be open, except windows designed to be opened solely as emergency exits.

(e) The exhaust system of every truck and truck tractor shall discharge to the atmosphere at a location to the rear of the cab or, if the exhaust projects above the cab, at a location near the rear of the cab.

(f) No part of the exhaust system shall be temporarily repaired with wrap or patches.

(g) No part of the exhaust system shall leak or discharge at a point forward of or directly below the driver/sleeper compartment. The exhaust outlet may discharge above the cab/sleeper roofline.

(h) The exhaust system must be securely fastened to the vehicle.

(i) Exhaust systems may use hangers which permit required movement due to expansion and contraction caused by heat of the exhaust and relative motion between engine and chassis of a vehicle.

[53 FR 49401, Dec. 7, 1988]

§ 393.84 Floors.

The flooring in all motor vehicles shall be substantially constructed, free of unnecessary holes and openings, and shall be maintained so as to minimize the entrance of fumes, exhaust gases, or fire. Floors shall not be permeated with oil or other substances likely to cause injury to persons using the floor as a traction surface.

[53 FR 49401, Dec. 7, 1988]

§ 393.85 [Reserved]

§ 393.86 Rear end protection.

Every motor vehicle, except truck-tractors, pole trailers, and vehicles engaged in driveaway-towaway operations, the date of manufacture of which is subsequent to December 31, 1952, which is so constructed that the body or the chassis assembly if without a body has a clearance at the rear end of more than 30 inches from the ground when empty, shall be provided with bumpers or devices serving similar purposes which shall be so constructed and located that:

(a) The clearance between the effective bottom of the bumpers or devices and the ground shall not exceed 30 inches with the vehicle empty;

(b) The maximum distance between the closest points between bumpers, or devices, if more than one is used, shall not exceed 24 inches;

(c) The maximum transverse distance from the widest part of the motor vehicle at the rear to the bumper or device shall not exceed 18 inches;

(d) The bumpers or devices shall be located not more than 24 inches forward of the extreme rear of the vehicle; and

(e) The bumpers or devices shall be substantially constructed and firmly attached. Motor vehicles constructed and maintained so that the body, chassis, or other parts of the vehicle afford the rear end protection contemplated shall be deemed to be in compliance with this section.

§ 393.87 Flags on projecting loads.

Any motor vehicle having a load or vehicle component which extends beyond the sides more than 4 inches or more than 4 feet beyond the rear shall have the extremities of the load marked with a red flag, not less than 12 inches square, at each point where a lamp is required by Table 1, § 393.11.

[53 FR 49401, Dec. 7, 1988]

§ 393.88 Television receivers.

Any motor vehicle equipped with a television viewer, screen or other means of visually receiving a television broadcast shall have the viewer or screen located in the motor vehicle at a point to the rear of the back of the driver's seat if such viewer or screen is in the same compartment as the driver and the viewer or screen shall be so located as not to be visible to the driver, while he/she is driving the motor vehicle. The operating controls for the television receiver shall be so located that the driver cannot operate them without leaving the driver's seat.

§ 393.89 Buses, driveshaft protection.

Any driveshaft extending lengthways under the floor of the passenger compartment of a bus shall be protected by means of at least one guard or bracket

at that end of the shaft which is provided with a sliding connection (spline or other such device) to prevent the whipping of the shaft in the event of failure thereof or of any of its component parts. A shaft contained within a torque tube shall not require any such device.

[33 FR 19735, Dec. 25, 1968, as amended at 53 FR 49402, Dec. 7, 1988]

§ 393.90 Buses, standee line or bar.

Except as provided below, every bus, which is designed and constructed so as to allow standees, shall be plainly marked with a line of contrasting color at least 2 inches wide or equipped with some other means so as to indicate to any person that he/she is prohibited from occupying a space forward of a perpendicular plane drawn through the rear of the driver's seat and perpendicular to the longitudinal axis of the bus. Every bus shall have clearly posted at or near the front, a sign with letters at least one-half inch high stating that it is a violation of the Federal Highway Administration's regulations for a bus to be operated with persons occupying the prohibited area. The requirements of this section shall not apply to any bus being transported in driveaway-towaway operation or to any level of the bus other that the level in which the driver is located nor shall they be construed to prohibit any seated person from occupying permanent seats located in the prohibited area provided such seats are so located that persons sitting therein will not interfere with the driver's safe operation of the bus.

§ 393.91 Buses, aisle seats prohibited.

No bus shall be equipped with aisle seats unless such seats are so designed and installed as to automatically fold and leave a clear aisle when they are unoccupied. No bus shall be operated if any seat therein is not securely fastened to the vehicle.

[53 FR 49402, Dec. 7, 1988]

§ 393.92 Buses, marking emergency doors.

Any bus equipped with an emergency door shall have such door clearly marked in letters at least 1 inch in height with the words ''Emergency Door'' or ''Emergency Exit.'' Emergency doors shall also be identified by a red electric lamp readily visible to passengers which lamp shall be lighted at all times when lamps are required to be lighted by § 392.30.

§ 393.93 Seats, seat belt assemblies, and seat belt assembly anchorages.

(a) *Buses*—(1) *Buses manufactured on or after January 1, 1965, and before July 1, 1971.* After June 30, 1972, every bus manufactured on or after January 1, 1965, and before July 1, 1971, must be equipped with a Type 1 or Type 2 seat belt assembly that conforms to Federal Motor Vehicle Safety Standard No. 209[1] (§ 571.209) installed at the driver's seat and seat belt assembly anchorages that conform to the location and geometric requirements of Federal Motor Vehicle Safety Standard No. 210[1] (§ 571.210) for that seat belt assembly.

(2) *Buses manufactured on or after July 1, 1971.* Every bus manufactured on or after July 1, 1971, must conform to the requirements of Federal Motor Vehicle Safety Standard No. 208[1] (§ 571.208) (relating to installation of seat belt assemblies) and Federal Motor Vehicle Safety Standard No. 210[1] (§ 571.210) (relating to installation of seat belt assembly anchorages).

(3) *Buses manufactured on or after January 1, 1972.* Every bus manufactured on or after January 1, 1972, must conform to the requirements of Federal Motor Vehicle Safety Standard No. 207[1] (§ 571.207) (relating to seating systems).

(b) *Trucks and truck tractors*—(1) *Trucks and truck tractors manufactured on and after January 1, 1965, and before July 1, 1971.* Except as provided in paragraph (d) of this section, after June 30, 1972, every truck and truck tractor manufactured on or after January 1, 1965, and before July 1, 1971, must be equipped with a Type 1 or Type 2 seat belt assembly that conforms to Federal Motor Vehicle Safety Standard No. 209 (§ 571.209) installed at the driver's seat and at the right front outboard seat, if

[1] Individual copies of Federal Motor Vehicle Safety Standards may be obtained from the National Highway Traffic Safety Administration. Nassif Building, 400 Seventh Street SW., Washington, D.C. 20590.

the vehicle has one, and seat belt assembly anchorages that conform to the location and geometric requirements of Federal Motor Vehicle Safety Standard No. 210 (§ 571.210) for each seat belt assembly that is required by this subparagraph.

(2) *Trucks and truck tractors manufactured on or after July 1, 1971.* Every truck and truck tractor manufactured on or after July 1, 1971, except a truck or truck tractor being transported in driveaway-towaway operation and having an incomplete vehicle seating and cab configuration, must conform to the requirements of Federal Motor Vehicle Safety Standard No. 208[1] (§ 571.208) (relating to installation of seat belt assemblies) and Federal Motor Vehicle Safety Standard No. 210[1] (§ 571.210) (relating to installation of seat belt assembly anchorages).

(3) *Trucks and truck tractors manufactured on or after January 1, 1972.* Every truck and truck tractor manufactured on or after January 1, 1972, except a truck or truck tractor being transported in driveaway-towaway operation and having an incomplete vehicle seating and cab configuration, must conform to the requirements of Federal Motor Vehicle Safety Standard No. 207[1] (§ 571.207) (relating to seating systems).

(c) *Effective date of standards.* Whenever paragraph (a) or (b) of this section requires conformity to a Federal Motor Vehicle Safety Standard, the vehicle or equipment must conform to the version of the Standard that is in effect on the date the vehicle is manufactured or on the date the vehicle is modified to conform to the requirements of paragraph (a) or (b) of this section, whichever is later.

(d) Trucks and truck tractors manufactured on or after January 1, 1965, and before July 1, 1971, and operated in the State of Hawaii, must comply with the provisions of paragraph (b) of this section on and after January 1, 1976.

[35 FR 16839, Oct. 30, 1970, as amended at 39 FR 32561, Sept. 9, 1974; 40 FR 32336, Aug. 1, 1975]

[1] See footnote to § 393.93(a).

§ 393.94 Vehicle interior noise levels.

(a) *Application of the rule in this section.* Except as provided in paragraph (d) of this section, this section applies to all motor vehicles manufactured on and after October 1, 1974. On and after April 1, 1975, this section applies to all motor vehicles manufactured before October 1, 1974.

(b) *General rule.* The interior sound level at the driver's seating position of a motor vehicle must not exceed 90 dB(A) when measured in accordance with paragraph (c) of this section.

(c) *Test procedure.*[2] (1) Park the vehicle at a location so that no large reflecting surfaces, such as other vehicles, signboards, buildings, or hills, are within 50 feet of the driver's seating position.

(2) Close all vehicle doors, windows, and vents. Turn off all power-operated accessories.

(3) Place the driver in his/her normal seated position at the vehicle's controls. Evacuate all occupants except the driver and the person conducting the test.

(4) Use a sound level meter which meets the requirements of the American National Standards Institute Standard ANSI S1.4–1971 Specification for Sound Level Meters, for Type 2 Meters. Set the meter to the A-weighting network, ''fast'' meter response.

(5) Locate the microphone, oriented vertically upward, 6 inches to the right of, in the same plane as, and directly in line with, the driver's right ear.

(6) With the vehicle's transmission in neutral gear, accelerate its engine to either its maximum governed engine speed, if it is equipped with an engine governor, or its speed at its maximum rated horsepower, if it is not equipped with an engine governor. Stabilize the engine at that speed.

(7) Observe the A-weighted sound level reading on the meter for the stabilized engine speed condition. Record that reading, if the reading has not been influenced by extraneous noise

[2] Standards of the American National Standards Institute are published by the American National Standards Institute. Information and copies may be obtained by writing to the Institute at 1430 Broadway, New York, N.Y. 10018.

sources such as motor vehicles operating on adjacent roadways.

(8) Return the vehicle's engine speed to idle and repeat the procedures specified in paragraphs (c) (6) and (7) of this section until two maximum sound levels within 2 dB of each other are recorded. Numerically average those two maximum sound level readings.

(9) The average obtained in accordance with paragraph (c)(8) of this section is the vehicle's interior sound level at the driver's seating position for the purpose of determining whether the vehicle conforms to the rule in paragraph (b) of this section. However, a 2 dB tolerance over the sound level limitation specified in that paragraph is permitted to allow for variations in test conditions and variations in the capabilities of meters.

(10) If the motor vehicle's engine radiator fan drive is equipped with a clutch or similar device that automatically either reduces the rotational speed of the fan or completely disengages the fan from its power source in response to reduced engine cooling loads the vehicle may be parked before testing with its engine running at high idle or any other speed the operator may choose, for sufficient time but not more than 10 minutes, to permit the engine radiator fan to automatically disengage.

(d) Vehicles manufactured before October 1, 1974, and operated wholly within the State of Hawaii, need not comply with this section until April 1, 1976.

[38 FR 30881, Nov. 8, 1973, as amended at 40 FR 32336, Aug. 1, 1975; 41 FR 28268, July 9, 1976]

Subpart H—Emergency Equipment

§ 393.95 Emergency equipment on all power units.

Except for a lightweight vehicle, every bus, truck, truck-tractor, and every driven vehicle in driveaway-towaway operation must be equipped as follows:

(a) *Fire extinguisher.* (1) Except as provided in paragraph (a)(4) of this section, every power unit must be equipped with a fire extinguisher that is properly filled and located so that it is readily accessible for use. The fire extinguisher must be securely mounted on the vehicle. The fire extinguisher must be designed, constructed, and maintained to permit visual determination of whether it is fully charged. The fire extinguisher must have an extinguishing agent that does not need protection from freezing. The fire extinguisher must not use a vaporizing liquid that gives off vapors more toxic than those produced by the substances shown as having a toxicity rating of 5 or 6 in the Underwriters' Laboratories ''Classification of Comparative Life Hazard of Gases and Vapors.''[1]

(2)(i) Before July 1, 1971, a power unit that is used to transport hazardous materials must be equipped with a fire extinguisher having an Underwriters' Laboratories rating[2] of 4 B:C or more. On and after July 1, 1971, a power unit that is used to transport hazardous materials must be equipped with a fire extinguisher having an Underwriters' Laboratories rating[2] of 10 B:C or more.

(ii) Before January 1, 1973, a power unit that is not used to transport hazardous materials must be equipped with a fire extinguisher having an Underwriters' Laboratories rating[2] of 4 B:C or more. On and after January 1, 1973, a power unit that is not used to transport hazardous materials must be equipped with either—

(A) A fire extinguisher having an Underwriters' Laboratories rating[2] of 5 B:C or more; or

(B) Two fire extinguishers, each of which has an Underwriters' Laboratories rating[2] of 4 B:C or more.

(iii) Each fire extinguisher required by this subparagraph must be labeled or marked with its Underwriters' Laboratories rating[2] and must meet the requirements of paragraph (a)(1) of this section.

(3) For purposes of this paragraph, a power unit is used to transport hazardous materials only if the power unit or

[1] Copies of the Classification can be obtained by writing to Underwriters' Laboratories, Inc., 205 East Ohio Street, Chicago, Ill. 60611.

[2] Underwriters' Laboratories ratings are given to fire entinguishers under the standards of Underwriters' Laboratories, Inc., 205 East Ohio Street, Chicago, Ill. 60611. Extinguishers must conform to the standards in effect on the date of manufacture or on Jan. 1, 1969, whichever is earlier.

a motor vehicle towed by the power unit must be marked or placarded in accordance with § 177.823 of this title.

(4) This paragraph does not apply to the driven unit in a driveaway-towaway operation.

(b) [Reserved]

(c) *Spare fuses.* At least one spare fuse or other overload protective device, if the devices used are not of a reset type, for each kind and size used. In driveaway-towaway operations, spares located on any one of the vehicles will be deemed adequate.

(d)–(e) [Reserved]

(f) *Warning devices for stopped vehicles.* Except as provided in paragraph (g) of this section, one of the following combinations of warning devices:

(1) *Vehicles equipped with warning devices before January 1, 1974.* Warning devices specified below may be used until replacements are necessary:

(i) Three liquid-burning emergency flares which satisfy the requirements of SAE Standard J597, ''Liquid Burning Emergency Flares,'' and three fusees and two red flags; or

(ii) Three electric emergency lanterns which satisfy the requirements of SAE Standard J596, ''Electric Emergency Lanterns,'' and two red flags; or

(iii) Three red emergency reflectors which satisfy the requirements of paragraph (i) of this section, and two red flags; or

(iv) Three red emergency reflective triangles which satisfy the requirements of paragraph (h) of this section; or

(v) Three bidirectional emergency reflective triangles that conform to the requirements of Federal Motor Vehicle Safety Standard No. 125, § 571.125 of this title.

(2) *Vehicles equipped with warning devices on and after January 1, 1974.* (i) Three bidirectional emergency reflective triangles that conform to the requirements of Federal Motor Vehicle Safety Standard No. 125, § 571.125 of this title; or

(ii) At least 6 fusees or 3 liquid-burning flares. The vehicle must have as many additional fusees or liquid-burning flares as are necessary to satisfy the requirements of § 392.22.

(3) *Supplemental warning devices.* Other warning devices may be used in addition to, but not in lieu of, the required warning devices, provided those warning devices do not decrease the effectiveness of the required warning devices.

(g) *Restrictions on the use of flame-producing devices.* Liquid-burning flares, fusees, oil lanterns, or any signal produced by a flame shall not be carried on any commercial motor vehicle transporting Division 1.1, 1.2, 1.3 (explosives) hazardous materials; any cargo tank motor vehicle used for the transportation of Division 2.1 (flammable gas) or Class 3 (flammable liquid) hazardous materials whether loaded or empty; or any commercial motor vehicle using compressed gas as a motor fuel.

(h) *Requirements for emergency reflective triangles manufactured before January 1, 1974.* (1) Each reflector shall be a collapsible equilateral triangle, with legs not less than 17 inches long and not less than 2 inches wide. The front and back of the exposed leg surfaces shall be covered with red reflective material not less than one half inch in width. The reflective surface, front and back, shall be approximately parallel. When placed in position, one point of the triangle shall be upward. The area within the sides of the triangle shall be open.

(2) *Reflective material:* The reflecting material covering the leg of the equilateral triangle shall comply either with:

(i) The requirements for reflex-reflector elements made of red methyl-methacrylate plastic material, meeting the color, sealing, minimum candle-power, wind test, vibration test, and corrosion resistance test of section 3 and 4 of Federal Specification RR–R–1185, dated November 17, 1966, or

(ii) The requirements for red reflective sheeting of Federal Specification L–S–300, dated September 7, 1965, except that the aggregate candlepower of the assembled triangle, in one direction, shall be not less than eight when measured at 0.2° divergence angle and —4° incidence angle, and not less than 80 percent of the candlepower specified for 1 square foot of material at all other angles shown in Table II, Reflective Intensity Values, of L–S–300.

(3) *Reflective surfaces alignment:* Every reflective triangle shall be so constructed that, when the triangle is properly placed, the reflective surfaces shall be in a plane perpendicular to the plane of the roadway surface with a permissible tolerance of ±10°. Reflective triangles which are collapsible shall be provided with means for holding the reflective surfaces within the required tolerance. Such holding means shall be readily capable of adjustment without the use of tools or special equipment.

(4) *Reflectors mechanical adequacy:* Every reflective triangle shall be of such weight and dimensions as to remain stationary when subjected to a 40 mile per hour wind when properly placed on any clean, dry paved road surface. The reflective triangle shall be so constructed as to withstand reasonable shocks without breakage.

(5) *Reflectors, incorporation in holding device:* Each set of reflective triangles shall be adequately protected by enclosure in a box, rack, or other adequate container specially designed and constructed so that the reflectors may be readily extracted for use.

(6) *Certification:* Every red emergency reflective triangle designed and constructed to comply with these requirements shall be plainly marked with the certification of the manufacturer that it complies therewith.

(i) *Requirements for red emergency reflectors.* Each red emergency reflector shall conform in all respects to the following requirements:

(1) *Reflecting elements required.* Each reflector shall be composed of at least two reflecting elements or surfaces on each side, front and back. The reflecting elements, front and back, shall be approximately parallel.

(2) *Reflecting elements to be Class A.* Each reflecting element or surface shall meet the requirement for a red Class A reflector contained in the SAE Recommended Practice[1] ''Reflex Reflectors.'' The aggregate candlepower output of all the reflecting elements or surface in one direction shall not be less than 12 when tested in a perpendicular position with observation at one-third degree as specified in the Photometric Test contained in the above-mentioned Recommended Practice.

(3) *Reflecting surfaces, protection.* If the reflector or the reflecting elements are so designed or constructed that the reflecting surfaces would be adversely affected by dust, soot, or other foreign matter or contacts with other parts of the reflector or its container, then such reflecting surfaces shall be adequately sealed within the body of the reflector.

(4) *Reflecting surfaces to be perpendicular.* Every reflector shall be so constructed that, when the reflector is properly placed, every reflecting element or surface is in a plane perpendicular to the plane of the roadway surface. Reflectors which are collapsible shall be provided with means for locking the reflector elements or surfaces in the required position; such locking means shall be readily capable of adjustment without the use of tools or special equipment.

(5) *Reflectors, mechanical adequacy.* Every reflector shall be of such weight and dimensions as to remain stationary when subjected to a 40 mile per hour wind when properly placed on any clean, dry, paved road surface. The reflector shall be so constructed as to withstand reasonable shocks without breakage.

(6) *Reflectors, incorporation on holding device.* Each set of reflectors and the reflecting elements or surfaces incorporated therein shall be adequately protected by enclosure in a box, rack, or other adequate container specially designed and constructed so that the reflectors may be readily extracted for use.

(7) *Certification.* Every red emergency reflector designed and constructed to comply with these requirements shall be plainly marked with the certification of the manufacturer that it complies therewith.

(j) *Requirements for fusees and liquid-burning flares.* Each fusee shall be capable of burning for 30 minutes, and each liquid-burning flare shall contain enough fuel to burn continuously for at least 60 minutes. Fusees and liquid-

[1] See footnote 1 to § 393.24(c).

burning flares shall conform to the requirements of Underwriters Laboratories, Inc., UL No. 912, Highway Emergency Signals, Fourth Edition, July 30, 1979, (with an amendment dated November 9, 1981). (See § 393.7(b) for information on the incorporation by reference and availability of this document.) Each fusee and liquid-burning flare shall be marked with the UL symbol in accordance with the requirements of UL 912.

(k) *Requirements for red flags.* Red flags shall be not less than 12 inches square, with standards adequate to maintain the flags in an upright position.

(49 U.S.C. 304, 1655; 49 CFR 1.48(b) and 301.60)

[33 FR 19735, Dec. 25, 1968, as amended at 35 FR 13019, Aug. 15, 1970; 35 FR 14619, Sept. 18, 1970; 37 FR 17176, Aug. 25, 1972; 40 FR 10685, Mar. 7, 1975; 41 FR 53031, Dec. 3, 1976; 47 FR 47837, Oct. 28, 1982; 59 FR 34712, July 6, 1994]

Subpart I—Protection Against Shifting or Falling Cargo

SOURCE: 38 FR 23522, Aug. 31, 1973, unless otherwise noted.

§ 393.100 General rules for protection against shifting or falling cargo.

(a) *Application and scope of the rules in this section.* This section applies to trucks, truck tractors, semitrailers, full trailers, and pole trailers. Each of those motor vehicles must, when transporting cargo, be loaded and equipped to prevent the shifting or falling of the cargo in the manner prescribed by the rules in paragraph (b) of this section. In addition, each cargo-carrying motor vehicle must conform to the applicable rules in §§ 393.102, 393.104, and 393.106.

(b) *Basic protection components.* Each cargo-carrying motor vehicle must be equipped with devices providing protection against shifting or falling cargo that meet the requirements of either paragraph (b) (1), (2), (3), or (4) of this section.

(1) *Option A.* The vehicle must have sides, side-boards, or stakes, and a rear endgate, endboard, or stakes. Those devices must be strong enough and high enough to assure that cargo will not shift upon, or fall from the vehicle. Those devices must have no aperture large enough to permit cargo in contact with one or more of the devices to pass through it.

(2) *Option B.* The vehicle must have at least one tiedown assembly that meets the requirements of § 393.102 for each 10 linear feet of lading or fraction thereof. (However, a pole trailer or an expandable trailer transporting metal articles under the special rules in paragraph (c) of this section is required only to have two or more of those tiedown assemblies at each end of the trailer.) In addition, the vehicle must have as many additional tiedown assemblies meeting the requirements of § 393.102 as are necessary to secure all cargo being transported either by direct contact between the cargo and the tiedown assemblies or by dunnage which is in contact with the cargo and is secured by tiedown assemblies.[1]

(3) *Option C* (*for vehicles transporting metal articles only*). A vehicle transporting cargo which consists of metal articles must conform to either the rules in paragraph (b) (1), (2), or (4) of this section, or the special rules for transportation of metal articles set forth in paragraph (c) of this section.

(4) *Option D.* The vehicle must have other means of protecting against shifting or falling cargo which are similar to, and at least as effective as, those specified in paragraph (b) (1), (2), or (3) of this section.

(c) *Special rules for metal articles*—(1) *Scope of the rules in this paragraph.* The rules in this paragraph apply to a motor vehicle transporting cargo consisting of metal articles if that vehicle does not conform to the rules in paragraph (b) (1), (2), or (4) of this section.

(2) *Application of other sections.* A motor vehicle transporting property consisting of metal articles must, regardless of whether the rules in this paragraph apply to it, conform to the rules in § 393.102 (relating to securement systems), § 393.104 (relating to blocking and bracing of cargo), and § 393.106 (relating to front-end structure requirements).

[1] Tiedown assemblies or dunnage in contact with sufficient exterior (including topmost) pieces of the cargo and securely holding each interior or lower piece comply with this requirement.

(3) *Coils.* Whenever a motor carrier transports one or more coils of metal which, individually or as a combination banded together, weigh 5,000 pounds or more, the coils shall be secured in the following manner:

(i) *Coils with eyes vertical:* One or more coils which are grouped and loaded side by side in a transverse or longitudinal row must be secured by—

(*a*) A tiedown assembly against the front of the coil or row of coils, restraining against forward motion;

(*b*) A tiedown assembly against the rear of the coil or row of coils, restraining against rearward motion; and

(*c*) A tiedown assembly over the top of each coil or transverse row of coils, restraining against vertical motion.

The same tiedown assembly shall not be used to comply with more than one of the requirements of paragraph (c)(3)(i) (*a*), (*b*), or (*c*) of this section.

COILS - EYE VERTICAL

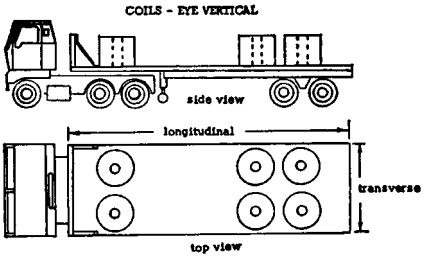

(ii) *Coils with eyes crosswise:* Each coil or transverse row of coils loaded side by side and having approximately the same outside diameters must be secured by—

(*a*) A tiedown assembly through the eye of each coil, restricting against forward motion and making an angle of less than 45° with the horizontal when viewed from the side of the vehicle;

(*b*) A tiedown assembly through the eye of each coil, restricting against rearward motion and making an angle of less than 45° with the horizontal when viewed from the side of the vehicle; and

(*c*) Timbers, having a nominal cross section of 4 x 4 inches or more and a length which is at least 75 percent of the width of the coil or row of coils, tightly placed against both the front and rear sides of the coil or row of coils and restrained to prevent movement of the coil or coils in the forward and rearward directions.

(*d*) If coils are loaded to contact each other in the longitudinal direction and relative motion between coils, and between coils and the vehicle, is prevented by tiedown assemblies and timbers—

(*1*) Only the foremost and rearmost coils must be secured with timbers; and

(*2*) A single tiedown assembly, restricting against forward motion, may be used to secure any coil except the rearmost one, which must be restrained against rearward motion.

COILS - EYE CROSSWISE

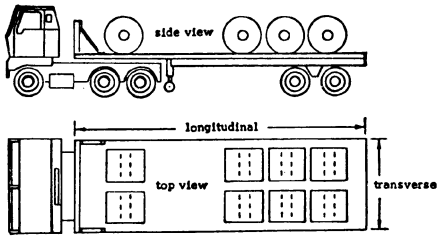

(iii) *Coils with eyes lengthwise:* A coil or transverse row of coils having approximately equal outside diameters and loaded side by side or a longitudinal row of coils having approximately equal outside diameters and loaded end to end must be secured as follows:

(*a*) The coil or coils must be restrained against side-by-side and fore-and-aft movement by—

(*1*) One or more tiedown assemblies over the top of each coil or transverse row; or

(*2*) Two or more tiedown assemblies through the eye of each coil or longitudinal row; or

(*3*) One or more tiedown assemblies, crossing from one side of the vehicle to the other, through the eye of each coil or longitudinal row of coils in a transverse row.

(*b*) Timbers having nominal cross section of 4 x 4 inches or more must be tightly placed against the sides of each coil or against the outboard sides of each transverse row of coils which are loaded side by side so that the timbers restrain against side-to-side movement.

(*c*) If, in accordance with paragraph (c)(3)(iii)(*a*)(*1*) of this section, only one

tiedown assembly over the top of each coil or transverse row of coils is used to restrain against side-to-side movement and fore-and-aft movement, timbers having a nominal cross section of 2 x 4 inches or more and which are firmly secured to longitudinal blocking must be tightly placed against the front and back of each coil, each longitudinal row of coils, and each transverse row of coils in a manner which restricts forward and rearward movement.

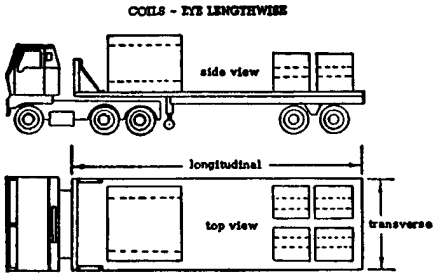

(iv) Timber which is used for blocking must be sound lumber which is free of defects (such as knots or cracks) that materially reduce its strength.

(v) Timbers need not be used on vehicles which have depressions in the floor or are equipped with other restraining devices which perform the functions specified for timbers by the rules in this section.

(vi) As used in this section, the term ''nominal'', when used to describe timber, means commercially dressed sizes generally designated by the dimensions indicated.

(4) *Miscellaneous metal articles.* Except as provided in paragraph (c)(4)(iv) of this section, whenever a motor carrier transports metal articles consisting of cut-to-length bars, plates, rods, sheet and tin mill products, billets, blooms, ingots, slabs, structural shapes, or pipe, and other tubular products and those articles, either individually or as a combination of articles banded or boxed together and handled as a single unit, weigh more than 2,000 pounds, the article shall be secured in the following manner:

(i) A single article, a group of articles, or a combination of articles loaded side by side across the width of the vehicle must be secured by at least one tiedown assembly over its top for at least every 8 feet of its length and at least two tiedown assemblies securing each individual article or combination of articles banded or otherwise secured together and handled as a single unit. However, articles which individually have a length of 8 feet or less and which are securely butted against each other in the fore-and-after direction may be secured by metal angles secured by tiedown assemblies, or they may be secured by a timber having a nominal cross section of 4 x 4 inches or more placed longitudinally over the articles and secured by tiedown assemblies. Tiedown assemblies may not be located beyond the ends of the article which they secure.

(ii) If articles are tiered and each tiered article rests securely on the one beneath it, the tier may be secured in the same manner as a single level of those articles is secured in accordance with the rules in this section.

(iii) Pole trailers must either comply with the requirements of paragraph (c)(4) (i) and (ii) of this section or have at least two tiedown assemblies securing the load to the forward bolster and at least two tiedown assemblies securing the load to the rear bolster.

(iv) The rules in this paragraph do not apply to special loads consisting of machinery or fabricated structural items, such as beams, girders, and trusses, which are fastened by special methods. However, those loads must be securely and adequately fastened to the vehicle.

(d) *Special rule for special-purpose vehicles.* The rules in this section do not apply to a vehicle transporting one or more articles which, because of their size, shape, or weight, must be carried on special-purpose vehicles or must be fastened by special methods. However, any article carried on that vehicle must be securely and adequately fastened to the vehicle.

(e) *Special rule for intermodal cargo containers.* Containers designed for the transportation of containerized, intermodal cargo and having integral securement devices must be fastened to the chassis of the motor vehicle with securement devices that prevent them from being unintentionally unfastened. The securement devices must restrain

the container from moving more than one-half inch forward, more than one-half inch aft, more than one-half inch to the right, more than one-half inch to the left, or more than one inch vertically when the container is subjected to the following accelerations relative to the vehicle:

Direction of force relative to longitudinal axis of vehicle	Acceleration in G's
Downward	1.70
Upward	0.50
Lateral	0.30
Longitudinal	1.80

(f) *Effective date.* This section is effective on October 1, 1973.

§ 393.102 Securement systems.

(a) *Application and scope of the rules in this section.* The rules in this section apply to tiedown assemblies (including chains, cables, steel straps, and fiber webbing), other securement devices, and attachment or fastening devices used in conjunction therewith, which are used to secure cargo to motor vehicles in transit. All devices which are used to secure cargo to a motor vehicle in transit under the rules in this subpart must conform to the requirements of this section.

(b) *Tiedown assemblies.* Except for integral securement devices of containers designed for the transportation of containerized, intermodal cargo which conform to the rules in § 393.100(e), the aggregate working load limit of the tiedown assemblies used to secure an article against movement in any direction must be at least 1/2 times the weight of the article. With the exception of marking identification, tiedowns used must meet applicable manufacturing standards listed in this paragraph (b).

(1) *Steel strapping.* Steel strapping used as a component of a tiedown assembly must conform to the requirements of the 1991 edition of the American Society for Testing and Materials' Standard Specification for Strapping, Flat Steel and Seals, ASTM D3953–91. Steel strapping which is not marked by the manufacturer with a working load limit, shall be considered to have a working load limit equal to 1/4 of the breaking strength listed in ASTM D3953–91. (See § 393.7(b) for information on the incorporation by reference and availability of this document.) Steel strapping that is one inch wide or wider must have at least two pairs of crimps in each seal and when an end-over-end lap joint is formed, it must be sealed with at least two seals.

(2) *Chain.* Chain used as a component of a tiedown assembly must conform to the requirements of the June 15, 1990, edition of the National Association of Chain Manufacturers' Welded Steel Chain Specifications applicable to all types of chain. (See § 393.7(b) for information on the incorporation by reference and availability of this document.)

(3) *Webbing.* Webbing used as a component of a tiedown assembly must conform to the requirements of the 1991 edition of the Web Sling and Tiedown Association's Recommended Standard Specification for Synthetic Webbing Tiedowns. (See § 393.7(b) for information on the incorporation by reference and availability of this document.)

(4) *Wire rope.* Wire rope used as a component of a tiedown assembly must conform to the requirements of the November 1985 second edition of the Wire Rope Technical Board's Wire Rope Users Manual. Wire rope which is not marked by the manufacturer with a working load limit, shall be considered to have a working load limit equal to ¼ of the nominal strength listed in the Wire Rope Users Manual. (See § 393.7(b) for information on the incorporation by reference and availability of this document.)

(5) *Cordage.* Cordage used as a component of a tiedown assembly, must conform to the applicable Cordage Institute rope standards listed below: PETRS–2, Polyester Fiber Rope, 3-Strand and 8-Strand Constructions, January, 1993; PPRS–2, Polypropylene Fiber Rope, 3-Strand and 8-Strand Constructions, August, 1992; CRS–1, Polyester/Polypropylene Composite Rope Specifications, Three- and Eight-Strand Standard Construction, May 1979; NRS–1, Nylon Rope Specifications, Three- and Eight-Strand Standard Construction, May 1979; C1, Double Braided Nylon Rope Specifications,

DBN-January 1984. (See § 393.7(b) for information on the incorporation by reference and availability of these documents.)

(6) *Tables of working load limits.* The working load limits listed in the tables in this paragraph are to be used when the tiedown material is not marked by the manufacturer with the working load limit. Tiedown materials which are marked by the manufacturer with working load limits which differ from the table, shall be considered to have a working load limit equal to the value for which they are marked. Synthetic cordage (e.g., nylon, polypropylene, polyester) which is not marked or labeled to enable identification of its composition or working load limit shall be considered to have a working load limit equal to that for polypropylene fiber rope.

TABLES TO § 393.102(b)(6)—WORKING LOAD LIMITS (WLL)

[Chain WLL in pounds (kg)]

Size inch (mm)	Grade 3 proof coil	Grade 4 high test	Grade 7 transport	Grade 8 alloy
¼ (7)	1300 (590)	2600 (1180)	3150 (1430)	3500 (1590)
5/16 (8)	1900 (860)	3900 (1770)	4700 (2130)	5100 (2310)
⅜ (10)	2650 (1200)	5400 (2450)	6600 (2990)	7100 (3220)
7/16 (11)	3500 (1590)	5800 (2630)	8750 (3970)	.....
½ (13)	4500 (2040)	9200 (4170)	11300 (5130)	12000 (5440)
⅝ (16)	6900 (3130)	11500 (5220)	15800 (7170)	18100 (8210)
Chain Mark	PC	HT	.....	T
Examples	3	4	7	8
	30	40	70	80

Synthetic Webbing WLL

Width inch (mm)	WLL pounds (kg)
1-¾ (45)	1750 (790)
2 (50)	2000 (910)
3 (75)	3000 (1360)
4 (100)	4000 (1810)

Wire Rope (6 X 37, Fiber Core) WLL

Diameter inch (mm)	WLL pounds (kg)
¼ (7)	1400 (640)
5/16 (8)	2100 (950)
⅜ (10)	3000 (1360)
7/16 (11)	4100 (1860)
½ (13)	5300 (2400)
⅝ (16)	8300 (3770)
¾ (20)	10900 (4940)
⅞ (22)	16100 (7300)
1 (25)	20900 (9480)

Manila Rope WLL

Diameter inch (mm)	WLL pounds (kg)
⅜ (10)	205 (90)
7/16 (11)	265 (120)
½ (13)	315 (150)
⅝ (16)	465 (210)
¾ (20)	640 (290)
1 (25)	1050 (480)

Polypropylene Fiber Rope WLL (3-Strand and 8-Strand Constructions)

Diameter inch (mm)	WLL pounds (kg)
⅜ (10)	400 (180)
7/16 (11)	525 (240)
½ (13)	625 (280)
⅝ (16)	925 (420)
¾ (20)	1275 (580)
1 (25)	2100 (950)

Polyester Fiber Rope WLL (3-Strand and 8-Strand Constructions)

Diameter inch (mm)	WLL pounds (kg)
3/8 (10)	555 (250)
7/16 (11)	750 (340)
1/2 (13)	960 (440)
5/8 (16)	1500 (680)
3/4 (20)	1880 (850)
1 (25)	3300 (1500)

Nylon Rope WLL

Diameter inch (mm)	WLL pounds (kg)
3/8 (10)	278 (130)
7/16 (11)	410 (190)
1/2 (13)	525 (240)
5/8 (16)	935 (420)
3/4 (20)	1420 (640)
1 (25)	2520 (1140)

Double Braided Nylon Rope WLL

Diameter inch (mm)	WLL pounds (kg)
3/8 (10)	336 (150)
7/16 (11)	502 (230)
1/2 (13)	655 (300)
5/8 (16)	1130 (510)
3/4 (20)	1840 (830)
1 (25)	3250 (1470)

Steel Strapping WLL

Width – thickness inch	WLL pounds (kg)
1-1/4 × 0.029	1190 (540)
1-1/4 × 0.031	1190 (540)
1-1/4 × 0.035	1190 (540)
1-1/4 × 0.044	1690 (770)
1-1/4 × 0.050	1690 (770)
1-1/4 × 0.057	1925 (870)
2 × 0.044	2650 (1200)
2 × 0.050	2650 (1200)

(c) *Load binders and hardware.* The strength of load binders and hardware that are part of, or used in conjunction with, a tiedown assembly must be equal to, or greater than the minimum strength specified for that tiedown assembly in paragraph (b) of this section.

(d) *Attachment to the vehicle.* The hook, bolt, weld, or other connector by which a tiedown assembly is attached to a vehicle, and the mounting place and means of mounting the connector, must be at least as strong as the tiedown assembly when that connector is loaded in any direction in which the tiedown assembly may load it.

(e) *Winches or other fastenings.* The anchorages of a winch or other fastening device mounted on a vehicle and used in conjunction with a tiedown assembly must have a combined tensile strength equal to, or greater than, the strength of the tiedown assembly.

(f) *Adjustability.* A tiedown assembly and its associated connectors and attachment devices must be designed, constructed, and maintained so that the driver of an in-transit vehicle can tighten them. However, the rules in this paragraph do not apply to a securement system in which the tiedown assembly consists of steel strapping or to a tiedown assembly which is not required by the rules in this section.

(49 U.S.C. 304, 1655; 49 CFR 1.48(b) and 301.60)

[38 FR 23522, Aug. 31, 1973, as amended at 47 FR 47837, Oct. 28, 1982; 59 FR 34718, July 6, 1994; 59 FR 43898, Aug. 25, 1994]

§ 393.104 Blocking and bracing.

(a) *Protection against longitudinal movement.* When a motor vehicle carries

cargo that is not firmly braced against a front-end structure that conforms to the requirements of § 393.106, the cargo must be secured so that, when the vehicle decelerates at a rate of 20 feet per second per second, the cargo will remain on the vehicle and will not penetrate the vehicle's front-end structure.

(b) *Protection against lateral movement.* When a vehicle carries cargo that may shift sideways in transit, the cargo must either be securely blocked or braced against the sides, sideboards, or stakes of the vehicle or be secured by devices that conform to the requirements of paragraph (b)(2), (b)(3), or (b)(4) of § 393.100.

(c) *Effective date.* This section is effective on October 1, 1973.

[38 FR 23522, Aug. 31, 1973, as amended at 38 FR 25183, Sept. 12, 1973]

§ 393.106 Front-end structure.

(a) *General rule.* (1) Except as provided in paragraph (g) of this section, every cargo-carrying motor vehicle must be equipped with a headerboard or similar device of sufficient strength to prevent load shifting and penetration or crushing of the driver's compartment.

(2) On and after the effective dates specified in paragraph (h) of this section, every cargo-carrying motor vehicle must have a front-end structure that conforms to the rules in this section.

(b) *Location.* The front-end structure must be located between the vehicle's cargo and the vehicle's driver.

(c) *Height and width.* The front-end structure must extend either to a height of 4 feet above the floor of the vehicle or to a height at which it blocks forward movement of any item of cargo being carried on the vehicle, whichever is lower. The front-end structure must have a width which is at least equal to the width of the vehicle or which blocks forward movement of any item of cargo being transported on the vehicle, whichever is narrower.

(d) *Strength.* The front-end structure must be capable of withstanding the horizontal forward static load specified in either paragraph (d) (1) or (2) of this section.

(1) For a front-end structure less than 6 feet in height, a horizontal forward static load equal to one half (½) of the weight of the cargo being transported on the vehicle uniformly distributed over the entire portion of the front-end structure that is within 4 feet above the vehicle's floor or that is at or below a height above the vehicle's floor at which it blocks forward movement of any item of the vehicle's cargo, whichever is less.

(2) For a front-end structure 6 feet in height or higher, a horizontal forward static load equal to four-tenths (0.4) of the weight of the cargo being transported on the vehicle uniformly distributed over the entire front-end structure.

(e) *Penetration resistance.* The front-end structure must be designed, constructed and maintained so that it is capable of resisting penetration by any item of cargo that contacts it when the vehicle decelerates at a rate of 20 feet per second per second. The front-end structure must have no aperture large enough to permit any item of cargo in contact with the structure to pass through it.

(f) *Substitute devices.* The requirements of this section may be met by the use of devices performing the same functions as a front-end structure, if the devices are at least as strong as, and provide protection against shifting cargo at least equal to, a front-end structure which conforms to those requirements.

(g) *Exemptions.* The following motor vehicles are exempt from the rules in this section:

(1) A vehicle which is designed and used exclusively to transport other vehicles, if each vehicle it transports is securely tied down by devices that conform to the requirements of § 393.102.

(2) A pole trailer or semitrailer being towed by a truck tractor that is equipped with a front-end structure that conforms to the rules in this section.

(3) A full trailer being towed by a vehicle that is equipped with a front-end structure that conforms to the requirements of this section for a front-end structure.

(4) A full trailer being towed by a vehicle that is loaded in such a manner that the cargo on the towing vehicle

conforms to the requirements of this section for a front-end structure.

(5) The rules in paragraphs (d) and (e) of this section do not apply to a motor vehicle manufactured before January 1, 1974.

(h) *Effective dates.* Cargo-carrying motor vehicles which are not exempted by paragraph (g) of this section must conform to the rules in this section as follows:

If the vehicle was manufactured—	It must conform to the rules in paragraph—	On and after—
Before Jan. 1, 1974.	(a), (b), and (f)	October 1, 1973 or the date it was manu- factured, whichever is later.
Before Jan. 1, 1974.	(c)	January 1, 1975.
On or after Jan. 1, 1974.	(a) through (f) inclusive.	The date it was manufactured.

Paragraphs (d) and (e) of this section do not apply to a motor vehicle that was manufactured before January 1, 1974.

Subpart J—Frames, Cab and Body Components, Wheels, Steering, and Suspension Systems

SOURCE: 53 FR 49402, Dec. 7, 1988, unless otherwise noted.

§ 393.201 Frames.

(a) The frame of every bus, truck, and truck tractor shall not be cracked, loose, sagging or broken.

(b) Bolts or brackets securing the cab or the body of the vehicle to the frame must not be loose, broken, or missing.

(c) The frame rail flanges between the axles shall not be bent, cut or notched, except as specified by the manufacturer.

(d) All accessories mounted to the truck tractor frame must be bolted or riveted.

(e) No holes shall be drilled in the top or bottom rail flanges, except as specified by the manufacturer.

(f) Field repairs are allowed.

§ 393.203 Cab and body components.

(a) The cab compartment doors or door parts used as an entrance or exist shall not be missing or broken. Doors shall not sag so that they cannot be properly opened or closed. No door shall be wired shut or otherwise secured in the closed position so that it cannot be readily opened. EXCEPTION: When the vehicle is loaded with pipe or bar stock that blocks the door and the cab has a roof exit.

(b) Bolts or brackets securing the cab or the body of the vehicle to the frame shall not be loose, broken, or missing.

(c) The hood must be securely fastened.

(d) All seats must be securely mounted.

(e) The front bumper must not be missing, loosely attached, or protruding beyond the confines of the vehicle so as to create a hazard.

§ 393.205 Wheels.

(a) Wheels and rims shall not be cracked or broken.

(b) Stud or bolt holes on the wheels shall shall not be elongated (out of round).

(c) Nuts or bolts shall not be missing or loose.

§ 393.207 Suspension systems.

(a) *Axles.* No axle positioning part shall be cracked, broken, loose or missing. All axles must be in proper alignment.

(b) *Adjustable axles.* Adjustable axle assemblies shall not have locking pins missing or disengaged.

(c) *Leaf springs.* No leaf spring shall be cracked, broken, or missing nor shifted out of position.

(d) *Coil springs.* No coil spring shall be cracked or broken.

(e) *Torsion bar.* No torsion bar or torsion bar suspension shall be cracked or broken.

(f) *Air suspensions.* The air pressure regulator valve shall not allow air into the suspension system until at least 55 psi is in the braking system. The vehicle shall be level (not tilting to the left or right). Air leakage shall not be greater than 3 psi in a 5-minute time period when the vehicle's air pressure gauge shows normal operating pressure.

§ 393.209 Steering wheel systems.

(a) The steering wheel shall be secured and must not have any spokes cracked through or missing.

(b) The steering wheel lash shall not exceed the following parameters:

Steering wheel diameter	Manual steering system	Power steering system
16″ or less	2″	4½″+
18″	2¼″	4¾″+
20″	2½″	5¼″+
22″	2¾″	5¾″+

(c) *Steering column.* The steering column must be securely fastened.

(d) *Steering system.* Universal joints shall not be worn, faulty or repaired by welding. The steering gear box shall not have loose or missing mounting bolts or cracks in the gear box or mounting brackets. The pitman arm on the steering gear output shaft shall not be loose. Steering wheels shall turn freely through the limit of travel in both directions.

(e) *Power steering systems.* All components of the power system must be in operating condition. No parts shall be loose or broken. Belts shall not be frayed, cracked or slipping. The system shall not leak. The power steering system shall have sufficient fluid in the reservoir.

PART 394 [RESERVED]

PART 395—HOURS OF SERVICE OF DRIVERS

Sec.
395.1 Scope of rules in this part.
395.2 Definitions.
395.3 Maximum driving time.
395.7 [Reserved]
395.8 Driver's record of duty status.
395.10—395.12 [Reserved]
395.13 Drivers declared out of service.
395.15 Automatic on-board recording devices.

AUTHORITY: 49 U.S.C. 31133, 31136, and 31502; sec. 345, Pub.L. 104–59, 109 Stat. 568, 613; and 49 CFR 1.48.

SOURCE: 33 FR 19758, Dec. 25, 1968, unless otherwise noted.

§395.1 Scope of rules in this part.

(a) *General.* (1) The rules in this part apply to all motor carriers and drivers, except as provided in paragraphs (b) through (n) of this section.

(2) The exceptions from Federal requirements contained in paragraphs (l) through (n) do not preempt State laws and regulations governing the safe operation of commercial motor vehicles.

(b) *Adverse driving conditions.* (1) Except as provided in paragraph (i)(2) of this section, a driver who encounters adverse driving conditions, as defined in §395.2, and cannot, because of those conditions, safely complete the run within the 10-hour maximum driving time permitted by §395.3(a) may drive and be permitted or required to drive a commercial motor vehicle for not more than 2 additional hours in order to complete that run or to reach a place offering safety for the occupants of the commercial motor vehicle and security for the commercial motor vehicle and its cargo. However, that driver may not drive or be permitted to drive—

(i) For more than 12 hours in the aggregate following 8 consecutive hours off duty; or

(ii) After he/she has been on duty 15 hours following 8 consecutive hours off duty.

(2) *Emergency conditions.* In case of any emergency, a driver may complete his/her run without being in violation of the provisions of the regulations in this part, if such run reasonably could have been completed absent the emergency.

(c) *Driver-salesperson.* The provisions of §395.3(b) shall not apply to any driver-salesperson whose total driving time does not exceed 40 hours in any period of 7 consecutive days.

(d) *Oilfield operations.* (1) In the instance of drivers of commercial motor vehicles used exclusively in the transportation of oilfield equipment, including the stringing and picking up of pipe used in pipelines, and servicing of the field operations of the natural gas and oil industry, any period of 8 consecutive days may end with the beginning of any off-duty period of 24 or more successive hours.

(2) In the case of specially trained drivers of commercial motor vehicles which are specially constructed to service oil wells, on-duty time shall not include waiting time at a natural gas or oil well site; *provided,* that all such time shall be fully and accurately accounted for in records to be maintained by the motor carrier. Such records shall be made available upon

request of the Federal Highway Administration.

(e) *100 air-mile radius driver.* A driver is exempt from the requirements of § 395.8 if:

(1) The driver operates within a 100 air-mile radius of the normal work reporting location;

(2) The driver, except a driver salesperson, returns to the work reporting location and is released from work within 12 consecutive hours;

(3) At least 8 consecutive hours off duty separate each 12 hours on duty;

(4) The driver does not exceed 10 hours maximum driving time following 8 consecutive hours off duty; and,

(5) The motor carrier that employs the driver maintains and retains for a period of 6 months accurate and true time records showing:

(i) The time the driver reports for duty each day;

(ii) The total number of hours the driver is on duty each day;

(iii) The time the driver is released from duty each day; and

(iv) The total time for the preceding 7 days in accordance with § 395.8(j)(2) for drivers used for the first time or intermittently.

(f) *Retail store deliveries.* The provisions of § 395.3 (a) and (b) shall not apply with respect to drivers of commercial motor vehicles engaged solely in making local deliveries from retail stores and/or retail catalog businesses to the ultimate consumer, when driving solely within a 100-air mile radius of the driver's work-reporting location, during the period from December 10 to December 25, both inclusive, of each year.

(g) *Retention of driver's record of duty status.* Upon written request to, and with the approval of, the Regional Director of Motor Carriers for the region in which the motor carrier has its principal place of business, a motor carrier may forward and maintain the driver's records of duty status at a regional or terminal office. The addresses and jurisdictions of the Regional Director of Motor Carriers offices are shown in § 390.27 of this chapter.

(h) *Sleeper berths.* Drivers using sleeper berth equipment as defined in § 395.2 or who are off duty at a natural gas or oil well location, may cumulate the required 8 consecutive hours off duty, as required by § 395.3, resting in a sleeper berth in two separate periods totaling 8 hours, neither period to be less than 2 hours, or resting while off duty in other sleeping accommodations at a natural gas or oil well location.

(i) *State of Alaska.* (1) The provisions of § 395.3 shall not apply to any driver who is driving a commercial motor vehicle in the State of Alaska. A driver who is driving a commercial motor vehicle in the State of Alaska must not drive or be required or permitted to drive—

(i) More than 15 hours following 8 consecutive hours off duty;

(ii) After being on duty for 20 hours or more following 8 consecutive hours off duty;

(iii) After having been on duty for 70 hours in any period of 7 consecutive days, if the motor carrier for which the driver drives does not operate every day in the week; or

(iv) After having been on duty for 80 hours in any period of 8 consecutive days, if the motor carrier for which the driver drives operates every day in the week.

(2) A driver who is driving a commercial motor vehicle in the State of Alaska and who encounters adverse driving conditions (as defined in § 395.2) may drive and be permitted or required to drive a commercial motor vehicle for the period of time needed to complete the run. After he/she completes the run, that driver must be off duty for 8 consecutive hours before he/she drives again.

(j) *State of Hawaii.* The rules in § 395.8 do not apply to a driver who drives a commercial motor vehicle in the State of Hawaii, if the motor carrier who employs the driver maintains and retains for a period of 6 months accurate and true records showing—

(1) The total number of hours the driver is on duty each day; and

(2) The time at which the driver reports for, and is released from, duty each day.

(k) *Travel time.* When a driver at the direction of the motor carrier is traveling, but not driving or assuming any other responsibility to the carrier, such time shall be counted as on-duty time unless the driver is afforded at

least 8 consecutive hours off duty when arriving at destination, in which case he/she shall be considered off duty for the entire period.

(l) *Agricultural operations.* The provisions of §395.3 shall not apply to drivers transporting agricultural commodities or farm supplies for agricultural purposes in a State if such transportation:

(1) Is limited to an area within a 100 air mile radius from the source of the commodities or the distribution point for the farm supplies, and

(2) Is conducted during the planting and harvesting seasons within such State, as determined by the State.

(m) *Ground water well drilling operations.* In the instance of a driver of a commercial motor vehicle who is used primarily in the transportation and operations of a ground water well drilling rig, any period of 7 or 8 consecutive days may end with the beginning of any off-duty period of 24 or more successive hours.

(n) Construction materials and equipment. In the instance of a driver of a commercial motor vehicle who is used primarily in the transportation of construction materials and equipment, any period of 7 or 8 consecutive days may end with the beginning of any off-duty period of 24 or more successive hours.

(o) *Utility service vehicles.* In the instance of a driver of a utility service vehicle, any period of 7 or 8 consecutive days may end with the beginning of any off-duty period of 24 or more successive hours.

[57 FR 33647, July 30, 1992, as amended at 58 FR 33777, June 21, 1993; 60 FR 38748, July 28, 1995; 61 FR 14679, Apr. 3, 1996]

§395.2 Definitions.

As used in this part, the following words and terms are construed to mean:

Adverse driving conditions means snow, sleet, fog, other adverse weather conditions, a highway covered with snow or ice, or unusual road and traffic conditions, none of which were apparent on the basis of information known to the person dispatching the run at the time it was begun.

Automatic on-board recording device means an electric, electronic, electromechanical, or mechanical device capable of recording driver's duty status information accurately and automatically as required by §395.15. The device must be integrally synchronized with specific operations of the commercial motor vehicle in which it is installed. At a minimum, the device must record engine use, road speed, miles driven, the date, and time of day.

Driver-salesperson means any employee who is employed solely as such by a private carrier of property by commercial motor vehicle, who is engaged both in selling goods, services, or the use of goods, and in delivering by commercial motor vehicle the goods sold or provided or upon which the services are performed, who does so entirely within a radius of 100 miles of the point at which he/she reports for duty, who devotes not more than 50 percent of his/her hours on duty to driving time. The term *selling goods* for purposes of this section shall include in all cases solicitation or obtaining of reorders or new accounts, and may also include other selling or merchandising activities designed to retain the customer or to increase the sale of goods or services, in addition to solicitation or obtaining of reorders or new accounts.

Driving time means all time spent at the driving controls of a commercial motor vehicle in operation.

Eight consecutive days means the period of 8 consecutive days beginning on any day at the time designated by the motor carrier for a 24-hour period.

Ground water well drilling rig means any vehicle, machine, tractor, trailer, semi-trailer, or specialized mobile equipment propelled or drawn by mechanical power and used on highways to transport water well field operating equipment, including water well drilling and pump service rigs equipped to access ground water.

Multiple stops means all stops made in any one village, town, or city may be computed as one.

On duty time means all time from the time a driver begins to work or is required to be in readiness to work until the time he/she is relieved from work and all responsibility for performing work. *On-duty time* shall include:

(1) All time at a carrier or shipper plant, terminal, facility, or other property, or on any public property, waiting to be dispatched, unless the driver has been relieved from duty by the motor carrier;

(2) All time inspecting equipment as required by §§392.7 and 392.8 of this chapter or otherwise inspecting, servicing, or conditioning any commercial motor vehicle at any time;

(3) All driving time as defined in the term *driving time* in this section;

(4) All time, other than driving time, in or upon any commercial motor vehicle except time spent resting in a sleeper berth as defined by the term *sleeper berth* of this section;

(5) All time loading or unloading a commercial motor vehicle, supervising, or assisting in the loading or unloading, attending a commercial motor vehicle being loaded or unloaded, remaining in readiness to operate the commercial motor vehicle, or in giving or receiving receipts for shipments loaded or unloaded;

(6) All time repairing, obtaining assistance, or remaining in attendance upon a disabled commercial motor vehicle;

(7) All time spent providing a breath sample or urine specimen, including travel time to and from the collection site, in order to comply with the random, reasonable suspicion, post-accident, or follow-up testing required by part 382 or part 391, subpart H, of this subchapter, whichever is applicable, when directed by a motor carrier;

(8) Performing any other work in the capacity of, or in the employ or service of, a common, contract or private motor carrier; and

(9) Performing any compensated work for any nonmotor carrier entity.

Seven consecutive days means the period of 7 consecutive days beginning on any day at the time designated by the motor carrier for a 24-hour period.

Sleeper berth means a berth conforming to the requirements of §393.76 of this chapter.

Transportation of construction materials and equipment means the transportation of construction and pavement materials, construction equipment, and construction maintenance vehicles, by a driver to or from an active construction site (a construction site between mobilization of equipment and materials to the site to the final completion of the construction project) within a 50 air mile radius of the normal work reporting location of the driver. This paragraph does not apply to the transportation of material found by the Secretary to be hazardous under 49 U.S.C. 5103 in a quantity requiring placarding under regulations issued to carry out such section.

Twenty-four-hour period means any 24-consecutive-hour period beginning at the time designated by the motor carrier for the terminal from which the driver is normally dispatched.

Utility service vehicle means any commercial motor vehicle:

(1) Used in the furtherance of repairing, maintaining, or operating any structures or any other physical facilities necessary for the delivery of public utility services, including the furnishing of electric, gas, water, sanitary sewer, telephone, and television cable or community antenna service;

(2) While engaged in any activity necessarily related to the ultimate delivery of such public utility services to consumers, including travel or movement to, from, upon, or between activity sites (including occasional travel or movement outside the service area necessitated by any utility emergency as determined by the utility provider); and

(3) Except for any occasional emergency use, operated primarily within the service area of a utility's subscribers or consumers, without regard to whether the vehicle is owned, leased, or rented by the utility.

[57 FR 33648, July 30, 1992, as amended at 59 FR 7515, Feb. 15, 1994; 59 FR 60324, Nov. 23, 1994; 60 FR 38748, July 28, 1995; 61 FR 14679, Apr. 3, 1996]

§ 395.3 Maximum driving time.

(a) Except as provided in §§395.1(b)(1), 395.1(f), and 395.1(i), no motor carrier shall permit or require any driver used by it to drive nor shall any such driver drive:

(1) More than 10 hours following 8 consecutive hours off duty; or

(2) For any period after having been on duty 15 hours following 8 consecutive hours off duty.

(b) No motor carrier shall permit or require a driver of a commercial motor vehicle to drive, nor shall any driver drive, regardless of the number of motor carriers using the driver's services, for any period after—

(1) Having been on duty 60 hours in any 7 consecutive days if the employing motor carrier does not operate commercial motor vehicles every day of the week; or

(2) Having been on duty 70 hours in any period of 8 consecutive days if the employing motor carrier operates commercial motor vehicles every day of the week.

[57 FR 33649, July 30, 1992, as amended at 60 FR 38748, July 28, 1995]

§395.7 [Reserved]

§395.8 Driver's record of duty status.

(a) Except for a private motor carrier of passengers (nonbusiness), every motor carrier shall require every driver used by the motor carrier to record his/her duty status for each 24 hour period using the methods prescribed in either paragraph (a)(1) or (2) of this section.

(1) Every driver who operates a commercial motor vehicle shall record his/her duty status, in duplicate, for each 24-hour period. The duty status time shall be recorded on a specified grid, as shown in paragraph (g) of this section. The grid and the requirements of paragraph (d) of this section may be combined with any company forms. The previously approved format of the Daily Log, Form MCS–59 or the Multi-day Log, MCS–139 and 139A, which meets the requirements of this section, may continue to be used.

(2) Every driver who operates a commercial motor vehicle shall record his/her duty status by using an automatic on-board recording device that meets the requirements of §395.15 of this part. The requirements of §395.8 shall not apply, except paragraphs (e) and (k) (1) and (2) of this section.

(b) The duty status shall be recorded as follows:

(1) ''Off duty'' or ''OFF.''

(2) ''Sleeper berth'' or ''SB'' (only if a sleeper berth used).

(3) ''Driving'' or ''D.''

(4) ''On-duty not driving'' or ''ON.''

(c) For each change of duty status (e.g., the place of reporting for work, starting to drive, on-duty not driving and where released from work), the name of the city, town, or village, with State abbreviation, shall be recorded.

NOTE: If a change of duty status occurs at a location other than a city, town, or village, show one of the following: (1) The highway number and nearest milepost followed by the name of the nearest city, town, or village and State abbreviation, (2) the highway number and the name of the service plaza followed by the name of the nearest city, town, or village and State abbreviation, or (3) the highway numbers of the nearest two intersecting roadways followed by the name of the nerest city, town, or village and State abbreviation.

(d) The following information must be included on the form in addition to the grid:

(1) Date;

(2) Total miles driving today;

(3) Truck or tractor and trailer number;

(4) Name of carrier;

(5) Driver's signature/certification;

(6) 24-hour period starting time (e.g. midnight, 9:00 a.m., noon, 3:00 p.m.);

(7) Main office address;

(8) Remarks;

(9) Name of co-driver;

(10) Total hours (far right edge of grid);

(11) Shipping document number(s), or name of shipper and commodity;

(e) Failure to complete the record of duty activities of this section or §395.15, failure to preserve a record of such duty activities, or making of false reports in connection with such duty activities shall make the driver and/or the carrier liable to prosecution.

(f) The driver's activities shall be recorded in accordance with the following provisions:

(1) *Entries to be current.* Drivers shall keep their records of duty status current to the time shown for the last change of duty status.

(2) *Entries made by driver only.* All entries relating to driver's duty status must be legible and in the driver's own handwriting.

(3) *Date.* The month, day and year for the beginning of each 24-hour period shall be shown on the form containing the driver's duty status record.

(4) *Total miles driving today*. Total mileage driven during the 24-hour period shall be recorded on the form containing the driver's duty status record.

(5) *Commercial motor vehicle identification*. The driver shall show the number assigned by the motor carrier, or the license number and licensing State of each commercial motor vehicle operated during each 24-hour period on his/her record of duty status. The driver of an articulated (combination) commercial motor vehicle shall show the number assigned by the motor carrier, or the license number and licensing State of each motor vehicle used in each commercial motor vehicle combination operated during that 24-hour period on his/her record of duty status.

(6) *Name of motor carrier*. The name(s) of the motor carrier(s) for which work is performed shall be shown on the form containing the driver's record of duty status. When work is performed for more than one motor carrier during the same 24-hour period, the beginning and finishing time, showing a.m. or p.m., worked for each motor carrier shall be shown after each motor carrier's name. Drivers of leased commercial motor vehicles shall show the name of the motor carrier performing the transportation.

(7) *Signature/certification*. The driver shall certify to the correctness of all entries by signing the form containing the driver's duty status record with his/her legal name or name of record. The driver's signature certifies that all entries required by this section made by the driver are true and correct.

(8) *Time base to be used*. (i) The driver's duty status record shall be prepared, maintained, and submitted using the time standard in effect at the driver's home terminal, for a 24-hour period beginning with the time specified by the motor carrier for that driver's home terminal.

(ii) The term ''7 or 8 consecutive days'' means the 7 or 8 consecutive 24-hour periods as designated by the carrier for the driver's home terminal.

(iii) The 24-hour period starting time must be identified on the driver's duty status record. One-hour increments must appear on the graph, be identified, and preprinted. The words ''Midnight'' and ''Noon'' must appear above or beside the appropriate one-hour increment.

(9) *Main office address*. The motor carrier's main office address shall be shown on the form containing the driver's duty status record.

(10) *Recording days off duty*. Two or more consecutive 24-hour periods off duty may be recorded on one duty status record.

(11) *Total hours*. The total hours in each duty status: off duty other than in a sleeper berth; off duty in a sleeper berth; driving, and on duty not driving, shall be entered to the right of the grid, the total of such entries shall equal 24 hours.

(12) *Shipping document number(s) or name of shipper and commodity* shall be shown on the driver's record of duty status.

(g) *Graph grid*. The following graph grid must be incorporated into a motor carrier recordkeeping system which must also contain the information required in paragraph (d) of this section.

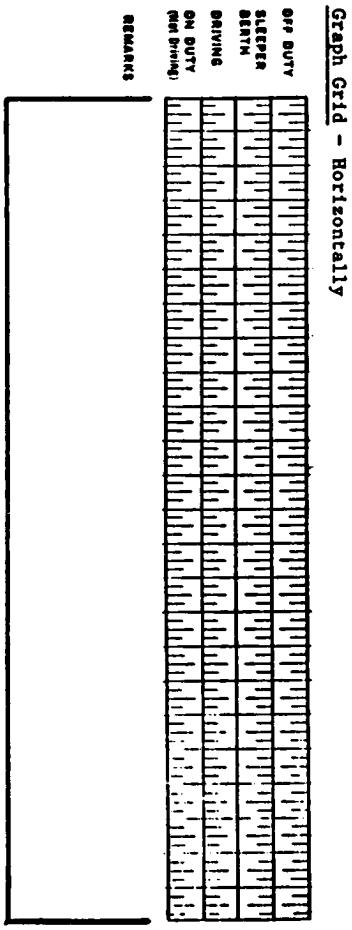

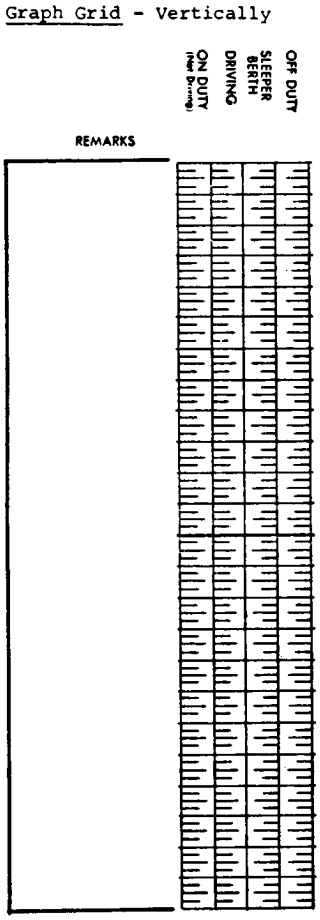

(h) *Graph grid preparation.* The graph grid may be used horizontally or vertically and shall be completed as follows:

(1) *Off duty.* Except for time spent resting in a sleeper berth, a continuous line shall be drawn between the appropriate time markers to record the period(s) of time when the driver is not on duty, is not required to be in readiness to work, or is not under any responsibility for performing work.

(2) *Sleeper berth.* A continuous line shall be drawn between the appropriate time markers to record the period(s) of time off duty resting in a sleeper berth, as defined in §395.2. (If a non-sleeper berth operation, sleeper berth need not be shown on the grid.)

(3) *Driving.* A continuous line shall be drawn between the appropriate time markers to record the period(s) of driving time, as defined in §395.2.

(4) *On duty not driving.* A continuous line shall be drawn between the appropriate time markers to record the period(s) of time on duty not driving specified in §395.2.

(5) *Location—remarks.* The name of the city, town, or village, with State abbreviation where each change of duty status occurs shall be recorded.

NOTE: If a change of duty status occurs at a location other than a city, town, or village, show one of the following: (1) The highway number and nearest milepost followed by the name of the nearest city, town, or village and State abbreviation, (2) the highway number and the name of the service plaza followed by the name of the nearest city, town, or village and State abbreviation, or (3) the highway numbers of the nearest two intersecting roadways followed by the name of the nearest city, town, or village and State abbreviation.

(i) *Filing driver's record of duty status.* The driver shall submit or forward by mail the original driver's record of duty status to the regular employing motor carrier within 13 days following the completion of the form.

(j) *Drivers used by more than one motor carrier.* (1) When the services of a driver are used by more than one motor carrier during any 24-hour period in effect at the driver's home terminal, the driver shall submit a copy of the record of duty status to each motor carrier. The record shall include:

(i) All duty time for the entire 24-hour period;

(ii) The name of each motor carrier served by the driver during that period; and

(iii) The beginning and finishing time, including a.m. or p.m., worked for each carrier.

(2) Motor carriers, when using a driver for the first time or intermittently, shall obtain from the driver a signed statement giving the total time on duty during the immediately preceding 7 days and the time at which the driver was last relieved from duty prior to beginning work for the motor carriers.

(k) *Retention of driver's record of duty status.* (1) Driver's records of duty status for each calendar month may be retained at the driver's home terminal until the 20th day of the succeeding calendar month. Such records shall then be forwarded to the carrier's principal place of business where they shall be retained with all supporting documents for a period of 6 months from date of receipt.

(2) The driver shall retain a copy of each record of duty status for the previous 7 consecutive days which shall be in his/her possession and available for inspection while on duty.

NOTE: Driver's Record of Duty Status.

The graph grid, when incorporated as part of any form used by a motor carrier, must be of sufficient size to be legible.

The following executed specimen grid illustrates how a driver's duty status should be recorded for a trip from Richmond, Virginia, to Newark, New Jersey. The grid reflects the midnight to midnight 24 hour period.

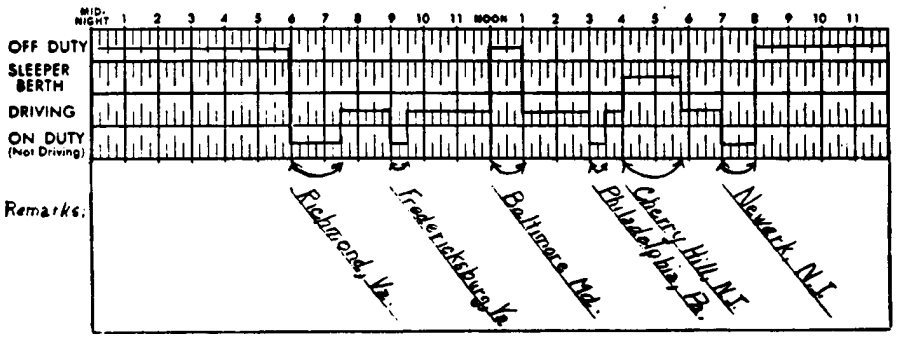

Graph Grid (Midnight to Midnight Operation)

The driver in this instance reported for duty at the motor carrier's terminal. The driver reported for work at 6 a.m., helped load, checked with dispatch, made a pretrip inspection, and performed other duties until 7:30 a.m. when the driver began driving. At 9 a.m. the driver had a minor accident in Fredericksburg, Virginia, and spent one half hour handling details with the local police. The driver arrived at the company's Baltimore, Maryland, terminal at noon and went to lunch while minor repairs were made to the

tractor. At 1 p.m. the driver resumed the trip and made a delivery in Philadelphia, Pennsylvania, between 3 p.m. and 3:30 p.m. at which time the driver started driving again. Upon arrival at Cherry Hill, New Jersey, at 4 p.m., the driver entered the sleeper berth for a rest break until 5:45 p.m. at which time the driver resumed driving again. At 7 p.m. the driver arrived at the company's terminal in Newark, New Jersey. Between 7 p.m. and 8 p.m. the driver prepared the required paperwork including completing the driver's record of duty status, driver vehicle inspection report, insurance report for the Fredericksburg, Virginia accident, checked for the next day's dispatch, etc. At 8 p.m., the driver went off duty.

(Approved by the Office of Management and Budget under control number 2125–0016)

[47 FR 53389, Nov. 26, 1982, as amended at 49 FR 38290, Sept. 28, 1984; 49 FR 46147, Nov. 23, 1984; 51 FR 12622, Apr. 14, 1986; 52 FR 41721, Oct. 30, 1987; 53 FR 18058, May 19, 1988; 53 FR 38670, Sept. 30, 1988; 57 FR 33649, July 30, 1992; 58 FR 33777, June 21, 1993; 59 FR 8753, Feb. 23, 1994; 60 FR 38748, July 28, 1995; 62 FR 16709, Apr. 8, 1997]

§§ 395.10—395.12 [Reserved]

§ 395.13 Drivers declared out of service.

(a) *Authority to declare drivers out of service.* Every special agent of the Federal Highway Administration (as defined in appendix B to this subchapter) is authorized to declare a driver out of service and to notify the motor carrier of that declaration, upon finding at the time and place of examination that the driver has violated the out of service criteria as set forth in paragraph (b) of this section.

(b) *Out of service criteria.* (1) No driver shall drive after being on duty in excess of the maximum periods permitted by this part.

(2) No driver required to maintain a record of duty status under § 395.8 or § 395.15 of this part shall fail to have a record of duty status current on the day of examination and for the prior seven consecutive days.

(3) *Exception.* A driver failing only to have possession of a record of duty status current on the day of examination and the prior day, but has completed records of duty status up to that time (previous 6 days), will be given the opportunity to make the duty status record current.

(c) *Responsibilities of motor carriers.* (1) No motor carrier shall:

(i) Require or permit a driver who has been declared out of service to operate a commercial motor vehicle until that driver may lawfully do so under the rules in this part.

(ii) Require a driver who has been declared out of service for failure to prepare a record of duty status to operate a commercial motor vehicle until that driver has been off duty for 8 consecutive hours and is in compliance with this section. The consecutive 8 hour off-duty period may include sleeper berth time.

(2) A motor carrier shall complete the ''Motor Carrier Certification of Action Taken'' portion of the form MCS–63 (Driver-Vehicle Examination Report) and deliver the copy of the form either personally or by mail to the Regional Director of Motor Carriers, Federal Highway Administration, at the address specified upon the form within 15 days following the date of examination. If the motor carrier mails the form, delivery is made on the date it is postmarked.

(d) *Responsibilities of the driver.* (1) No driver who has been declared out of service shall operate a commercial motor vehicle until that driver may lawfully do so under the rules of this part.

(2) No driver who has been declared out of service, for failing to prepare a record of duty status, shall operate a commercial motor vehicle until the driver has been off duty for 8 consecutive hours and is in compliance with this section.

(3) A driver to whom a form has been tendered declaring the driver out of service shall within 24 hours thereafter deliver or mail the copy to a person or place designated by motor carrier to receive it.

(4) Section 395.13 does not alter the hazardous materials requirements prescribed in § 397.5 pertaining to attendance and surveillance of commercial motor vehicles.

[44 FR 34963, June 18, 1979, as amended at 47 FR 53392, Nov. 26, 1982; 51 FR 12622, Apr. 14, 1986; 53 FR 18058, May 19, 1988; 53 FR 38670, Sept. 30, 1988; 53 FR 47544, Nov. 23, 1988; 60 FR 38748, July 28, 1995]

§ 395.15 Automatic on-board recording devices.

(a) *Authority to use automatic on-board recording device.* (1) A motor carrier may require a driver to use an automatic on-board recording device to record the driver's hours of service in lieu of complying with the requirements of § 395.8 of this part.

(2) Every driver required by a motor carrier to use an automatic on-board recording device shall use such device to record the driver's hours of service.

(b) *Information requirements.* (1) Automatic on-board recording devices shall produce, upon demand, a driver's hours of service chart, electronic display, or printout showing the time and sequence of duty status changes including the drivers' starting time at the beginning of each day.

(2) The device shall provide a means whereby authorized Federal, State, or local officials can immediately check the status of a driver's hours of service. This information may be used in conjunction with handwritten or printed records of duty status, for the previous 7 days.

(3) Support systems used in conjunction with on-board recorders at a driver's home terminal or the motor carrier's principal place of business must be capable of providing authorized Federal, State or local officials with summaries of an individual driver's hours of service records, including the information specified in § 395.8(d) of this part. The support systems must also provide information concerning on-board system sensor failures and identification of edited data. Such support systems should meet the information interchange requirements of the American National Standard Code for Information Interchange (ANSCII) (EIARS–232/CCITT V.24 port (National Bureau of Standards ''Code for Information Interchange,'' FIPS PUB 1–1)).

(4) The driver shall have in his/her possession records of duty status for the previous 7 consecutive days available for inspection while on duty. These records shall consist of information stored in and retrievable from the automatic on-board recording device, handwritten records, computer generated records, or any combination thereof.

(5) All hard copies of the driver's record of duty status must be signed by the driver. The driver's signature certifies that the information contained thereon is true and correct.

(c) The duty status and additional information shall be recorded as follows:

(1) ''Off duty'' or ''OFF'', or by an identifiable code or character;

(2) ''Sleeper berth'' or ''SB'' or by an identifiable code or character (only if the sleeper berth is used);

(3) ''Driving'' or ''D'', or by an identifiable code or character; and

(4) ''On-duty not driving'' or ''ON'', or by an identifiable code or character.

(5) Date;

(6) Total miles driving today;

(7) Truck or tractor and trailer number;

(8) Name of carrier;

(9) Main office address;

(10) 24-hour period starting time (e.g., midnight, 9:00 a.m., noon, 3:00 p.m.)

(11) Name of co-driver;

(12) Total hours; and

(13) Shipping document number(s), or name of shipper and commodity.

(d) *Location of duty status change.* (1) For each change of duty status (e.g., the place and time of reporting for work, starting to drive, on-duty not driving and where released from work), the name of the city, town, or village, with State abbreviation, shall be recorded.

(2) Motor carriers are permitted to use location codes in lieu of the requirements of paragraph (d)(1) of this section. A list of such codes showing all possible location identifiers shall be carried in the cab of the commercial motor vehicle and available at the motor carrier's principal place of business. Such lists shall be made available to an enforcement official on request.

(e) *Entries made by driver only.* If a driver is required to make written entries relating to the driver's duty status, such entries must be legible and in the driver's own handwriting.

(f) *Reconstruction of records of duty status.* Drivers are required to note any failure of automatic on-board recording devices, and to reconstruct the driver's record of duty status for the current day, and the past 7 days, less any days for which the drivers have records, and to continue to prepare a

handwritten record of all subsequent duty status until the device is again operational.

(g) *On-board information.* Each commercial motor vehicle must have on-board the commercial motor vehicle an information packet containing the following items:

(1) An instruction sheet describing in detail how data may be stored and retrieved from an automatic on-board recording system; and

(2) A supply of blank driver's records of duty status graph-grids sufficient to record the driver's duty status and other related information for the duration of the current trip.

(h) *Submission of driver's record of duty status.* (1) The driver shall submit, electronically or by mail, to the employing motor carrier, each record of the driver's duty status within 13 days following the completion of each record;

(2) The driver shall review and verify that all entries are accurate prior to submission to the employing motor carrier; and

(3) The submission of the record of duty status certifies that all entries made by the driver are true and correct.

(i) *Performance of recorders.* Motor carriers that use automatic on-board recording devices for recording their drivers' records of duty status in lieu of the handwritten record shall ensure that:

(1) A certificate is obtained from the manufacturer certifying that the design of the automatic on-board recorder has been sufficiently tested to meet the requirements of this section and under the conditions it will be used;

(2) The automatic on-board recording device permits duty status to be updated only when the commercial motor vehicle is at rest, except when registering the time a commercial motor vehicle crosses a State boundary;

(3) The automatic on-board recording device and associated support systems are, to the maximum extent practicable, tamperproof and do not permit altering of the information collected concerning the driver's hours of service;

(4) The automatic on-board recording device warns the driver visually and/or audibly that the device has ceased to function. Devices installed and operational as of October 31, 1988, and authorized to be used in lieu of the handwritten record of duty status by the FHWA are exempted from this requirement.

(5) Automatic on-board recording devices with electronic displays shall have the capability of displaying the following:

(i) Driver's total hours of driving today;

(ii) The total hours on duty today;

(iii) Total miles driving today;

(iv) Total hours on duty for the 7 consecutive day period, including today;

(v) Total hours on duty for the prior 8 consecutive day period, including the present day; and

(vi) The sequential changes in duty status and the times the changes occurred for each driver using the device.

(6) The on-board recorder is capable of recording separately each driver's duty status when there is a multiple-driver operation;

(7) The on-board recording device/system identifies sensor failures and edited data when reproduced in printed form. Devices installed and operational as of October 31, 1988, and authorized to be used in lieu of the handwritten record of duty status by the FHWA are exempted from this requirement.

(8) The on-board recording device is maintained and recalibrated in accordance with the manufacturer's specifications;

(9) The motor carrier's drivers are adequately trained regarding the proper operation of the device; and

(10) The motor carrier must maintain a second copy (back-up copy) of the electronic hours-of-service files, by month, in a different physical location than where the original data is stored.

(j) *Rescission of authority.* (1) The FHWA may, after notice and opportunity to reply, order any motor carrier or driver to comply with the requirements of § 395.8 of this part.

(2) The FHWA may issue such an order if the FHWA has determined that—

(i) The motor carrier has been issued a conditional or unsatisfactory safety rating by the FHWA;

(ii) The motor carrier has required or permitted a driver to establish, or the driver has established, a pattern of exceeding the hours of service limitations of § 395.3 of this part;

(iii) The motor carrier has required or permitted a driver to fail, or the driver has failed, to accurately and completely record the driver's hours of service as required in this section; or

(iv) The motor carrier or driver has tampered with or otherwise abused the automatic on-board recording device on any commercial motor vehicle.

[53 FR 38670, Sept. 30, 1988, as amended at 60 FR 38748, July 28, 1995]

PART 396—INSPECTION, REPAIR, AND MAINTENANCE

Sec.
396.1 Scope.
396.3 Inspection, repair, and maintenance.
396.5 Lubrication.
396.7 Unsafe operations forbidden.
396.9 Inspection of motor vehicles in operation.
396.11 Driver vehicle inspection report(s).
396.13 Driver inspection.
396.15 Driveaway-towaway operations and inspections.
396.17 Periodic inspection.
396.19 Inspector qualifications.
396.21 Periodic inspection recordkeeping requirements.
396.23 Equivalent to periodic inspection.
396.25 Qualifications of brake inspectors.

AUTHORITY: 49 U.S.C. 31133, 31136, and 31502; 49 CFR 1.48.

SOURCE: 44 FR 38526, July 2, 1979, unless otherwise noted.

§ 396.1 Scope.

General—Every motor carrier, its officers, drivers, agents, representatives, and employees directly concerned with the inspection or maintenance of motor vehicles shall comply and be conversant with the rules of this part.

[44 FR 38526, July 2, 1979, as amended at 53 FR 18058, May 19, 1988]

§ 396.3 Inspection, repair, and maintenance.

(a) *General.* Every motor carrier shall systematically inspect, repair, and maintain, or cause to be systematically inspected, repaired, and maintained, all motor vehicles subject to its control.

(1) Parts and accessories shall be in safe and proper operating condition at all times. These include those specified in part 393 of this subchapter and any additional parts and accessories which may affect safety of operation, including but not limited to, frame and frame assemblies, suspension systems, axles and attaching parts, wheels and rims, and steering systems.

(2) Pushout windows, emergency doors, and emergency door marking lights in buses shall be inspected at least every 90 days.

(b) *Required records*—For vehicles controlled for 30 consecutive days or more, except for a private motor carrier of passengers (nonbusiness), the motor carriers shall maintain, or cause to be maintained, the following record for each vehicle:

(1) An identification of the vehicle including company number, if so marked, make, serial number, year, and tire size. In addition, if the motor vehicle is not owned by the motor carrier, the record shall identify the name of the person furnishing the vehicle;

(2) A means to indicate the nature and due date of the various inspection and maintenance operations to be performed;

(3) A record of inspection, repairs, and maintenance indicating their date and nature; and

(4) A record of tests conducted on pushout windows, emergency doors, and emergency door marking lights on buses.

(c) *Record retention.* The records required by this section shall be retained where the vehicle is either housed or maintained for a period of 1 year and for 6 months after the motor vehicle leaves the motor carrier's control.

[44 FR 38526, July 2, 1979, as amended at 48 FR 55868, Dec. 16, 1983; 53 FR 18058, May 19, 1988; 59 FR 8753, Feb. 23, 1994; 59 FR 60324, Nov. 23, 1994]

§ 396.5 Lubrication.

Every motor carrier shall ensure that each motor vehicle subject to its control is—

(a) Properly lubricated; and

(b) Free of oil and grease leaks.

§ 396.7 Unsafe operations forbidden.

(a) *General.* A motor vehicle shall not be operated in such a condition as to likely cause an accident or a breakdown of the vehicle.

(b) *Exemption.* Any motor vehicle discovered to be in an unsafe condition while being operated on the highway may be continued in operation only to the nearest place where repairs can safely be effected. Such operation shall be conducted only if it is less hazardous to the public than to permit the vehicle to remain on the highway.

§ 396.9 Inspection of motor vehicles in operation.

(a) *Personnel authorized to perform inspections.* Every special agent of the FHWA (as defined in appendix B to this subchapter) is authorized to enter upon and perform inspections of motor carrier's vehicles in operation.

(b) *Prescribed inspection report.* The Driver-Equipment Compliance Check shall be used to record results of motor vehicle inspections conducted by authorized FHWA personnel.

(c) *Motor vehicles declared ''out of service.''* (1) Authorized personnel shall declare and mark ''out of service'' any motor vehicle which by reason of its mechanical condition or loading would likely cause an accident or a breakdown. An ''Out of Service Vehicle'' sticker shall be used to mark vehicles ''out of service.''

(2) No motor carrier shall require or permit any person to operate nor shall any person operate any motor vehicle declared and marked ''out of service'' until all repairs required by the ''out of service notice'' have been satisfactorily completed. The term ''operate'' as used in this section shall include towing the vehicle, except that vehicles marked ''out of service'' may be towed away by means of a vehicle using a crane or hoist. A vehicle combination consisting of an emergency towing vehicle and an ''out of service'' vehicle shall not be operated unless such combination meets the performance requirements of this subchapter except for those conditions noted on the Driver Equipment Compliance Check.

(3) No person shall remove the ''Out of Service Vehicle'' sticker from any motor vehicle prior to completion of all repairs required by the ''out of service notice''.

(d) *Motor carrier disposition.* (1) The driver of any motor vehicle receiving an inspection report shall deliver it to the motor carrier operating the vehicle upon his/her arrival at the next terminal or facility. If the driver is not scheduled to arrive at a terminal or facility of the motor carrier operating the vehicle within 24 hours, the driver shall immediately mail the report to the motor carrier.

(2) Motor carriers shall examine the report. Violations or defects noted thereon shall be corrected.

(3) Within 15 days following the date of the inspection, the motor carrier shall—

(i) Certify that all violations noted have been corrected by completing the ''Signature of Carrier Official, Title, and Date Signed'' portions of the form; and

(ii) Return the completed roadside inspection form to the issuing agency at the address indicated on the form and retain a copy at the motor carrier's principal place of business or where the vehicle is housed for 12 months from the date of the inspection.

(49 U.S.C. 3102; 49 CFR 1.48(b))

[44 FR 38526, July 2, 1979, as amended at 49 FR 38290, Sept. 28, 1984; 57 FR 40964, Sept. 8, 1992]

§ 396.11 Driver vehicle inspection report(s).

(a) *Report required.* Every motor carrier shall require its drivers to report, and every driver shall prepare a report in writing at the completion of each day's work on each vehicle operated and the report shall cover at least the following parts and accessories:

—Service brakes including trailer brake connections
—Parking (hand) brake
—Steering mechanism
—Lighting devices and reflectors
—Tires
—Horn
—Windshield wipers
—Rear vision mirrors
—Coupling devices
—Wheels and rims
—Emergency equipment

(b) *Report content.* The report shall identify the motor vehicle and list any defect or deficiency discovered by or reported to the driver which would affect safety of operation of the motor vehicle or result in its mechanical breakdown. If no defect or deficiency is discovered by or reported to the driver, the report(s) shall so indicate. In all instances, the driver shall sign the vehicle inspection report. On two-driver operations, only one driver needs to sign the report, provided both drivers agree as to the defects or deficiencies. If a driver operates more than one vehicle during the day, a report shall be prepared for each vehicle operated.

(c) *Corrective action.* Prior to operating a motor vehicle, motor carriers or their agent(s) shall effect repair of any items listed on the vehicle inspection report(s) that would be likely to affect the safety of operation of the vehicle.

(1) Motor carriers or their agent(s) shall certify on the report(s) which lists any defect(s) or deficiency(s) that the defect(s) or deficiency(s) has been corrected or that correction is unnecessary before the vehicle is again dispatched.

(2) Motor Carriers shall retain the original copy of each vehicle inspection report and the certification of repairs for at least 3 months from the date the report was prepared.

(3) A legible copy of the last vehicle inspection report, certified if required, shall be carried on the power unit.

(d) *Exemption.* The rules in this section shall not apply to a private motor carrier of passengers (nonbusiness) operations, driveaway-towaway operations as specified in § 396.15, or to any motor carrier operating only one (1) motor vehicle.

[44 FR 38526, July 2, 1979, as amended at 45 FR 46425, July 10, 1980; 53 FR 18058, May 19, 1988; 59 FR 8753, Feb. 23, 1994]

§ 396.13 Driver inspection.

Before driving a motor vehicle, the driver shall:

(a) Be satisfied that the motor vehicle is in safe operating condition;

(b) Review the last vehicle inspection report required to be carried on the power unit; and

(c) Sign the report, only if defects or deficiencies were noted by the driver who prepared the report, to acknowledge that the driver has reviewed it and that there is a certification that the required repairs have been performed. The signature requirement does not apply to listed defects on a towed unit which is no longer part of the vehicle combination.

[44 FR 76526, Dec. 27, 1979, as amended at 48 FR 55868, Dec. 16, 1983]

§ 396.15 Driveaway-towaway operations and inspections.

(a) *General.* Effective December 7, 1989, every motor carrier, with respect to motor vehicles engaged in driveaway-towaway operations, shall comply with the requirements of this part. EXCEPTION: Maintenance records required by § 396.3, the vehicle inspection report required by § 396.11, and the periodic inspection required by § 396.17 of this part shall not be required for any vehicle which is part of the shipment being delivered.

(b) *Pre-trip inspection.* Before the beginning of any driveaway-towaway operation of motor vehicles in combination, the motor carrier shall make a careful inspection and test to ascertain that:

(1) The towbar or saddle-mount connections are properly secured to the towed and towing vehicle;

(2) They function adequately without cramping or binding of any of the parts; and

(3) The towed motor vehicle follows substantially in the path of the towing vehicle without whipping or swerving.

(c) *Post-trip inspection.* Motor carriers shall maintain practices to ensure that following completion of any trip in driveaway-towaway operation of motor vehicles in combination, and before they are used again, the towbars and saddle-mounts are disassembled and inspected for worn, bent, cracked, broken, or missing parts. Before reuse, suitable repair or replacement shall be made of any defective parts and the devices shall be properly reassembled.

[44 FR 38526, July 2, 1979, as amended at 53 FR 49410, Dec. 7, 1988; 53 FR 49968, Dec. 12, 1988]

§ 396.17 Periodic inspection.

(a) Every commercial motor vehicle shall be inspected as required by this

section. The inspection shall include, at a minimum, the parts and accessories set forth in appendix G of this subchapter.

NOTE: The term commercial motor vehicle includes each vehicle in a combination vehicle. For example, for a tractor semitrailer, fulltrailer combination, the tractor, semitrailer, and the fulltrailer (including the converter dolly if so equipped) shall each be inspected.

(b) Except as provided in §396.23, a motor carrier shall inspect or cause to be inspected all motor vehicles subject to its control.

(c) A motor carrier shall not use a commercial motor vehicle unless each component identified in appendix G has passed an inspection in accordance with the terms of this section at least once during the preceding 12 months and documentation of such inspection is on the vehicle. The documentation may be:

(1) The inspection report prepared in accordance with paragraph 396.21(a), or

(2) Other forms of documentation, based on the inspection report (e.g., sticker or decal), which contains the following information:

(i) The date of inspection;

(ii) Name and address of the motor carrier or other entity where the inspection report is maintained;

(iii) Information uniquely identifying the vehicle inspected if not clearly marked on the motor vehicle; and

(iv) A certification that the vehicle has passed an inspection in accordance with §396.17.

(d) A motor carrier may perform the required annual inspection for vehicles under the carrier's control which are not subject to an inspection under §396.23(b)(1).

(e) In lieu of the self inspection provided for in paragraph (d) of this section, a motor carrier may choose to have a commercial garage, fleet leasing company, truck stop, or other similar commercial business perform the inspection as its agent, provided that business operates and maintains facilities appropriate for commercial vehicle inspections and it employs qualified inspectors, as required by §396.19.

(f) Vehicles passing roadside or periodic inspections performed under the auspices of any State government or equivalent jurisdiction or the FHWA, meeting the minimum standards contained in appendix G of this subchapter, will be considered to have met the requirements of an annual inspection for a period of 12 months commencing from the last day of the month in which the inspection was performed, except as provided in §396.23(b)(1).

(g) It shall be the responsibility of the motor carrier to ensure that all parts and accessories not meeting the minimum standards set forth in appendix G to this subchapter are repaired promptly.

(h) Failure to perform properly the annual inspection set forth in this section shall cause the motor carrier to be subject to the penalty provisions provided by 49 U.S.C. 521(b).

[53 FR 49410, Dec. 7, 1988; 53 FR 49968, Dec. 12, 1988, as amended at 54 FR 50725, Dec. 8, 1989]

§396.19 Inspector qualifications.

(a) It shall be the motor carrier's responsibility to ensure that the individual(s) performing an annual inspection under §396.17 (d) or (e) is qualified as follows:

(1) Understands the inspection criteria set forth in 49 CFR part 393 and appendix G of this subchapter and can identify defective components;

(2) Is knowledgeable of and has mastered the methods, procedures, tools and equipment used when performing an inspection; and

(3) Is capable of performing an inspection by reason of experience, training, or both as follows:

(i) Successfully completed a State or Federal-sponsored training program or has a certificate from a State or Canadian Province which qualifies the person to perform commercial motor vehicle safety inspections, or

(ii) Have a combination of training and/or experience totaling at least 1 year. Such training and/or experience may consist of:

(A) Participation in a truck manufacturer-sponsored training program or similar commercial training program designed to train students in truck operation and maintenance;

(B) Experience as a mechanic or inspector in a motor carrier maintenance program;

(C) Experience as a mechanic or inspector in truck maintenance at a commercial garage, fleet leasing company, or similar facility; or

(D) Experience as a commercial vehicle inspector for a State, Provincial or Federal Government.

(b) Evidence of that individual's qualifications under this section shall be retained by the motor carrier for the period during which that individual is performing annual motor vehicle inspections for the motor carrier, and for one year thereafter. However, motor carriers do not have to maintain documentation of inspector qualifications for those inspections performed either as part of a State periodic inspection program or at the roadside as part of a random roadside inspection program.

[53 FR 49410, Dec. 7, 1988; 53 FR 49968, Dec. 12, 1988]

§ 396.21 Periodic inspection recordkeeping requirements.

(a) The qualified inspector performing the inspection shall prepare a report which:

(1) Identifies the individual performing the inspection;

(2) Identifies the motor carrier operating the vehicle;

(3) Identifies the date of the inspection;

(4) Identifies the vehicle inspected;

(5) Identifies the vehicle components inspected and describes the results of the inspection, including the identification of those components not meeting the minimum standards set forth in appendix G to this subchapter; and

(6) Certifies the accuracy and completeness of the inspection as complying with all the requirements of this section.

(b)(1) The original or a copy of the inspection report shall be retained by the motor carrier or other entity who is responsible for the inspection for a period of fourteen months from the date of the inspection report. The original or a copy of the inspection report shall be retained where the vehicle is either housed or maintained.

(2) The original or a copy of the inspection report shall be available for inspection upon demand of an authorized Federal, State or local official.

(3) *Exception*. Where the motor carrier operating the commercial motor vehicles did not perform the commercial motor vehicle's last annual inspection, the motor carrier shall be responsible for obtaining the original or a copy of the last annual inspection report upon demand of an authorized Federal, State, or local official.

[54 FR 50725, Dec. 8, 1989]

§ 396.23 Equivalent to periodic inspection.

(a) The motor carrier may meet the requirements of § 396.17 through a State or other jurisdiction's roadside inspection program. The inspection must have been performed during the preceding 12 months. In using the roadside inspection, the motor carrier would need to retain a copy of an annual inspection report showing that the inspection was performed in accordance with the minimum periodic inspection standards set forth in appendix G to this subchapter. When accepting such an inspection report, the motor carrier must ensure that the report complies with the requirements of § 396.21(a).

(b)(1) If a commercial motor vehicle is subject to a mandatory State inspection program which is determined by the Administrator to be as effective as § 396.17, the motor carrier shall meet the requirement of § 396.17 through that State's inspection program. Commercial motor vehicle inspections may be conducted by State personnel, at State authorized commercial facilities, or by the motor carrier under the auspices of a State authorized self-inspection program.

(2) Should the FHWA determine that a State inspection program, in whole or in part, is not as effective as § 396.17, the motor carrier must ensure that the periodic inspection required by § 396.17 is performed on all commercial motor vehicles under its control in a manner specified in § 396.17.

[53 FR 49410, Dec. 7, 1988; 53 FR 49968, Dec. 12, 1988, as amended at 60 FR 38749, July 28, 1995]

§ 396.25 Qualifications of brake inspectors.

(a) The motor carrier shall ensure that all inspections, maintenance, repairs or service to the brakes of its

commercial motor vehicles, are performed in compliance with the requirements of this section.

(b) For purposes of this section, *brake inspector* means any employee of a motor carrier who is responsible for ensuring all brake inspections, maintenance, service, or repairs to any commercial motor vehicle, subject to the motor carrier's control, meet the applicable Federal standards.

(c) No motor carrier shall require or permit any employee who does not meet the minimum brake inspector qualifications of §396.25(d) to be responsible for the inspection, maintenance, service or repairs of any brakes on its commercial motor vehicles.

(d) The motor carrier shall ensure that each brake inspector is qualified as follows:

(1) Understands the brake service or inspection task to be accomplished and can perform that task; and

(2) Is knowledgeable of and has mastered the methods, procedures, tools and equipment used when performing an assigned brake service or inspection task; and

(3) Is capable of performing the assigned brake service or inspection by reason of experience, training or both as follows:

(i) Has successfully completed an apprenticeship program sponsored by a State, a Canadian Province, a Federal agency or a labor union, or a training program approved by a State, Provincial or Federal agency, or has a certificate from a State or Canadian Province which qualifies the person to perform the assigned brake service or inspection task (including passage of Commercial Driver's License air brake tests in the case of a brake inspection); or

(ii) Has brake-related training or experience or a combination thereof totaling at least one year. Such training or experience may consist of:

(A) Participation in a training program sponsored by a brake or vehicle manufacturer or similar commercial training program designed to train students in brake maintenance or inspection similar to the assigned brake service or inspection tasks; or

(B) Experience performing brake maintenance or inspection similar to the assigned brake service or inspection task in a motor carrier maintenance program; or

(C) Experience performing brake maintenance or inspection similar to the assigned brake service or inspection task at a commercial garage, fleet leasing company, or similar facility.

(e) No motor carrier shall employ any person as a brake inspector unless the evidence of the inspector's qualifications, required under this section is maintained by the motor carrier at its principal place of business, or at the location at which the brake inspector is employed. The evidence must be maintained for the period during which the brake inspector is employed in that capacity and for one year thereafter. However, motor carriers do not have to maintain evidence of qualifications to inspect air brake systems for such inspections performed by persons who have passed the air brake knowledge and skills test for a Commercial Driver's License.

[56 FR 491, Jan. 7, 1991]

PART 397—TRANSPORTATION OF HAZARDOUS MATERIALS; DRIVING AND PARKING RULES

Subpart A—General

Sec.
397.1 Application of the rules in this part.
397.2 Compliance with Federal motor carrier safety regulations.
397.3 State and local laws, ordinances, and regulations.
397.5 Attendance and surveillance of motor vehicles.
397.7 Parking.
397.9 [Reserved]
397.11 Fires.
397.13 Smoking.
397.15 Fueling.
397.17 Tires.
397.19 Instructions and documents.

Subpart B [Reserved]

Subpart C—Routing of Non-Radioactive Hazardous Materials

397.61 Purpose and scope.
397.63 Applicability.
397.65 Definitions.
397.67 Motor carrier responsibility for routing.
397.69 Highway routing designations; preemption.

397.71 Federal standards.
397.73 Public information and reporting requirements.
397.75 Dispute resolution.
397.77 Judicial review of dispute decision.

Subpart D—Routing of Class 7 (Radioactive) Materials

397.101 Requirements for motor carriers and drivers.
397.103 Requirements for State routing designations.

Subpart E—Preemption Procedures

397.201 Purpose and scope of the procedures.
397.203 Standards for determining preemption.
397.205 Preemption application.
397.207 Preemption notice.
397.209 Preemption processing.
397.211 Preemption determination.
397.213 Waiver of preemption application.
397.215 Waiver notice.
397.217 Waiver processing.
397.219 Waiver determination and order.
397.221 Timeliness.
397.223 Petition for reconsideration.
397.225 Judicial review.

AUTHORITY: 49 U.S.C. 322; 49 CFR 1.48. Subpart A also issued under 49 U.S.C. 31136, 31502. Subparts C, D, and E also issued under 49 U.S.C. 5112, 5125.

SOURCE: 36 FR 4876, Mar. 13, 1971, unless otherwise noted.

Subpart A—General

§ 397.1 Application of the rules in this part.

(a) The rules in this part apply to each motor carrier engaged in the transportation of hazardous materials by a motor vehicle which must be marked or placarded in accordance with § 177.823 of this title and to—

(1) Each officer or employee of the motor carrier who performs supervisory duties related to the transportation of hazardous materials; and

(2) Each person who operates or who is in charge of a motor vehicle containing hazardous materials.

(b) Each person designated in paragraph (a) of this section must know and obey the rules in this part.

[36 FR 4876, Mar. 13, 1971, as amended at 36 FR 16067, Aug. 19, 1971; 53 FR 18058, May 19, 1988; 60 FR 38749, July 28, 1995]

§ 397.2 Compliance with Federal motor carrier safety regulations.

A motor carrier or other person to whom this part is applicable must comply with the rules in parts 390 through 397, inclusive, of this subchapter when he/she is transporting hazardous materials by a motor vehicle which must be marked or placarded in accordance with § 177.823 of this title.

[37 FR 18080, Sept. 7, 1972]

§ 397.3 State and local laws, ordinances, and regulations.

Every motor vehicle containing hazardous materials must be driven and parked in compliance with the laws, ordinances, and regulations of the jurisdiction in which it is being operated, unless they are at variance with specific regulations of the Department of Transportation which are applicable to the operation of that vehicle and which impose a more stringent obligation or restraint.

§ 397.5 Attendance and surveillance of motor vehicles.

(a) Except as provided in paragraph (b) of this section, a motor vehicle which contains a Division 1.1, 1.2, or 1.3 (explosive) material must be attended at all times by its driver or a qualified representative of the motor carrier that operates it.

(b) The rules in paragraph (a) of this section do not apply to a motor vehicle which contains Division 1.1, 1.2, or 1.3 material if all the following conditions exist—

(1) The vehicle is located on the property of a motor carrier, on the property of a shipper or consignee of the explosives, in a safe haven, or, in the case of a vehicle containing 50 pounds or less of a Division 1.1, 1.2, or 1.3 material, on a construction or survey site; and

(2) The lawful bailee of the explosives is aware of the nature of the explosives the vehicle contains and has been instructed in the procedures which must be followed in emergencies; and

(3) The vehicle is within the bailee's unobstructed field of view or is located in a safe haven.

(c) A motor vehicle which contains hazardous materials other than Division 1.1, 1.2, or 1.3, materials, and

which is located on a public street or highway, or the shoulder of a public highway, must be attended by its driver. However, the vehicle need not be attended while its driver is performing duties which are incident and necessary to the driver's duties as the operator of the vehicle.

(d) For purposes of this section—

(1) A motor vehicle is attended when the person in charge of the vehicle is on the vehicle, awake, and not in a sleeper berth, or is within 100 feet of the vehicle and has it within his/her unobstructed field of view.

(2) A qualified representative of a motor carrier is a person who—

(i) Has been designated by the carrier to attend the vehicle;

(ii) Is aware of the nature of the hazardous materials contained in the vehicle he/she attends;

(iii) Has been instructed in the procedures he/she must follow in emergencies; and

(iv) Is authorized to move the vehicle and has the means and ability to do so.

(3) A safe haven in an area specifically approved in writing by local, State, or Federal governmental authorities for the parking of unattended vehicles containing Division 1.1, 1.2, or 1.3 materials.

(e) The rules in this section do not relieve the driver from any obligation imposed by law relating to the placing of warning devices when a motor vehicle is stopped on a public street or highway.

[59 FR 63925, Dec. 12, 1994]

§ 397.7 Parking.

(a) A motor vehicle which contains Division 1.1, 1.2, or 1.3 materials must not be parked under any of the following circumstances—

(1) On or within 5 feet of the traveled portion of a public street or highway;

(2) On private property (including premises of fueling or eating facility) without the knowledge and consent of the person who is in charge of the property and who is aware of the nature of the hazardous materials the vehicle contains; or

(3) Within 300 feet of a bridge, tunnel, dwelling, or place where people work, congregate, or assemble, except for brief periods when the necessities of operation require the vehicle to be parked and make it impracticable to park the vehicle in any other place.

(b) A motor vehicle which contains hazardous materials other than Division 1.1, 1.2, or 1.3 materials must not be parked on or within five feet of the traveled portion of public street or highway except for brief periods when the necessities of operation require the vehicle to be parked and make it impracticable to park the vehicle in any other place.

[59 FR 63925, Dec. 12, 1994]

§ 397.9 [Reserved]

§ 397.11 Fires.

(a) A motor vehicle containing hazardous materials must not be operated near an open fire unless its driver has first taken precautions to ascertain that the vehicle can safely pass the fire without stopping.

(b) A motor vehicle containing hazardous materials must not be parked within 300 feet of an open fire.

§ 397.13 Smoking.

No person may smoke or carry a lighted cigarette, cigar, or pipe on or within 25 feet of—

(a) A motor vehicle which contains Class 1 materials, Class 5 materials, or flammable materials classified as Division 2.1, Class 3, Divisions 4.1 and 4.2; or

(b) An empty tank motor vehicle which has been used to transport Class 3, flammable materials, or Division 2.1 flammable gases, which when so used, was required to be marked or placarded in accordance with the rules in § 177.823 of this title.

[59 FR 63925, Dec. 12, 1994]

§ 397.15 Fueling.

When a motor vehicle which contains hazardous materials is being fueled—

(a) Its engine must not be operating; and

(b) A person must be in control of the fueling process at the point where the fuel tank is filled.

§ 397.17 Tires.

(a) If a motor vehicle which contains hazardous materials is equipped with dual tires on any axle, its driver must

stop the vehicle in a safe location at least once during each 2 hours or 100 miles of travel, whichever is less, and must examine its tires. The driver must also examine the vehicle's tires at the beginning of each trip and each time the vehicle is parked.

(b) If, as the result of an examination pursuant to paragraph (a) of this section, or otherwise, a tire if found to be flat, leaking, or improperly inflated, the driver must cause the tire to be repaired, replaced, or properly inflated before the vehicle is driven. However, the vehicle may be driven to the nearest safe place to perform the required repair, replacement, or inflation.

(c) If, as the result of an examination pursuant to paragraph (a) of this section, or otherwise, a tire is found to be overheated, the driver shall immediately cause the overheated tire to be removed and placed at a safe distance from the vehicle. The driver shall not operate the vehicle until the cause of the overheating is corrected.

(d) Compliance with the rules in this section does not relieve a driver from the duty to comply with the rules in §§ 397.5 and 397.7.

§ 397.19 Instructions and documents.

(a) A motor carrier that transports Division 1.1, 1.2, or 1.3 (explosive) materials must furnish the driver of each motor vehicle in which the explosives are transported with the following documents:

(1) A copy of the rules in this part;

(2) [Reserved]

(3) A document containing instructions on procedures to be followed in the event of accident or delay. The documents must include the names and telephone numbers of persons (including representatives of carriers or shippers) to be contracted, the nature of the explosives being transported, and the precautions to be taken in emergencies such as fires, accidents, or leakages.

(b) A driver who receives documents in accordance with paragraph (a) of this section must sign a receipt for them. The carrier shall retain the receipt in its files for 1 year at its principal place of business.

(c) A driver of a motor vehicle which contains Division 1.1, 1.2, or 1.3 materials must be in possession of, be familiar with, and be in compliance with

(1) The documents specified in paragraph (a) of this section;

(2) The documents specified in § 177.817 of this title; and

(3) The written route plan specified in § 397.67.

[59 FR 63925, Dec. 12, 1994]

Subpart B [Reserved]

Subpart C—Routing of Non-Radioactive Hazardous Materials

SOURCE: 59 FR 51830, Oct. 12, 1994, unless otherwise noted.

§ 397.61 Purpose and scope.

This subpart contains routing requirements and procedures that States and Indian tribes are required to follow if they establish, maintain, or enforce routing designations over which a non-radioactive hazardous material (NRHM) in a quantity which requires placarding may or may not be transported by a motor vehicle. It also provides regulations for motor carriers transporting placarded or marked NRHM and procedures for dispute resolutions regarding NRHM routing designations.

§ 397.63 Applicability.

The provisions of this subpart apply to any State or Indian tribe that establishes, maintains, or enforces any routing designations over which NRHM may or may not be transported by motor vehicle. They also apply to any motor carrier that transports or causes to be transported placarded or marked NRHM in commerce.

§ 397.65 Definitions.

For purposes of this subpart, the following definitions apply:

Administrator. The Federal Highway Administrator, who is the chief executive of the Federal Highway Administration, an agency within the United States Department of Transportation, or his/her designate.

Commerce. Any trade, traffic, or transportation in the United States which:

(1) Is between a place under the jurisdiction of a State or Indian tribe and any place outside of such jurisdiction; or

(2) Is solely within a place under the jurisdiction of a State or Indian tribe but which affects trade, traffic, or transportation described in subparagraph (a).

FHWA. The Federal Highway Administration, an agency within the Department of Transportation.

Hazardous material. A substance or material, including a hazardous substance, which has been determined by the Secretary of Transportation to be capable of posing an unreasonable risk to health, safety, or property when transported in commerce, and which has been so designated.

Indian tribe. Has the same meaning as contained in §4 of the Indian Self-Determination and Education Act, 25 U.S.C. 450b.

Motor carrier. A for-hire motor carrier or a private motor carrier of property. The term includes a motor carrier's agents, officers and representatives as well as employees responsible for hiring, supervising, training, assigning, or dispatching of drivers.

Motor vehicle. Any vehicle, machine, tractor, trailer, or semitrailer propelled or drawn by mechanical power and used upon the highways in the transportation of passengers or property, or any combination thereof.

NRHM. A non-radioactive hazardous material transported by motor vehicle in types and quantities which require placarding, pursuant to Table 1 or 2 of 49 CFR 172.504.

Political subdivision. A municipality, public agency or other instrumentality of one or more States, or a public corporation, board, or commission established under the laws of one or more States.

Radioactive material. Any material having a specific activity greater than 0.002 microcuries per gram (uCi/g), as defined in 49 CFR 173.403.

Routing agency. The State highway agency or other State agency designated by the Governor of that State, or an agency designated by an Indian tribe, to supervise, coordinate, and approve the NRHM routing designations for that State or Indian tribe.

Routing designations. Any regulation, limitation, restriction, curfew, time of travel restriction, lane restriction, routing ban, port-of-entry designation, or route weight restriction, applicable to the highway transportation of NRHM over a specific highway route or portion of a route.

Secretary. The Secretary of Transportation.

State. A State of the United States, the District of Columbia, the Commonwealth of Puerto Rico, the Commonwealth of the Northern Mariana Islands, the Virgin Islands, American Samoa or Guam.

§ 397.67 Motor carrier responsibility for routing.

(a) A motor carrier transporting NRHM shall comply with NRHM routing designations of a State or Indian tribe pursuant to this subpart.

(b) A motor carrier carrying hazardous materials required to be placarded or marked in accordance with 49 CFR 177.823 and not subject to a NRHM routing designations pursuant to this subpart, shall operate the vehicle over routes which do not go through or near heavily populated areas, places where crowds are assembled, tunnels, narrow streets, or alleys, except where the motor carrier determines that:

(1) There is no practicable alternative;

(2) A reasonable deviation is necessary to reach terminals, points of loading and unloading, facilities for food, fuel, repairs, rest, or a safe haven; or

(3) A reasonable deviation is required by emergency conditions, such as a detour that has been established by a highway authority, or a situation exists where a law enforcement official requires the driver to take an alternative route.

(c) Operating convenience is not a basis for determining whether it is practicable to operate a motor vehicle in accordance with paragraph (b) of this section.

(d) Before a motor carrier requires or permits a motor vehicle containing explosives in Class 1, Divisions 1.1, 1.2, 1.3, as defined in 49 CFR 173.50 and 173.53 respectively, to be operated, the carrier or its agent shall prepare a

written route plan that complies with this section and shall furnish a copy to the driver. However, the driver may prepare the written plan as agent for the motor carrier when the trip begins at a location other than the carrier's terminal.

§ 397.69 Highway routing designations; preemption.

(a) Any State or Indian tribe that establishes or modifies a highway routing designation over which NRHM may or may not be transported on or after November 14, 1994, and maintains or enforces such designation, shall comply with the highway routing standards set forth in § 397.71 of this subpart. For purposes of this subpart, any highway routing designation affecting the highway transportation of NRHM, made by a political subdivision of a State is considered as one made by that State, and all requirements of this subpart apply.

(b) Except as provided in §§ 397.75 and 397.219, a NRHM route designation made in violation of paragraph (a) of this section is preempted pursuant to section 105(b)(4) of the Hazardous Materials Transportation Act (49 U.S.C. app. 1804(b)(4)). This provision shall become effective after November 14, 1996.

(c) A highway routing designation established by a State, political subdivision, or Indian tribe before November 14, 1994 is subject to preemption in accordance with the preemption standards in paragraphs (a)(1) and (a)(2) of § 397.203 of this subpart.

(d) A State, political subdivision, or Indian tribe may petition for a waiver of preemption in accordance with § 397.213 of this part.

§ 397.71 Federal standards.

(a) A State or Indian tribe shall comply with the Federal standards under paragraph (b) of this section when establishing, maintaining or enforcing specific NRHM routing designations over which NRHM may or may not be transported.

(b) The Federal standards are as follows:

(1) *Enhancement of public safety.* The State or Indian tribe shall make a finding, supported by the record to be developed in accordance with paragraphs (b)(2)(ii) and (b)(3)(iv) of this section, that any NRHM routing designation enhances public safety in the areas subject to its jurisdiction and in other areas which are directly affected by such highway routing designation. In making such a finding, the State or Indian tribe shall consider:

(i) The factors listed in paragraph (b)(9) of this section; and

(ii) The DOT ''Guidelines for Applying Criteria to Designate Routes for Transporting Hazardous Materials,'' DOT/RSPA/OHMT–89–02, July 1989[1] or its most current version; or an equivalent routing analysis which adequately considers overall risk to the public.

(2) *Public participation.* Prior to the establishment of any NRHM routing designation, the State or Indian tribe shall undertake the following actions to ensure participation by the public in the routing process:

(i) The State or Indian tribe shall provide the public with notice of any proposed NRHM routing designation and a 30-day period in which to comment. At any time during this period or following review of the comments received, the State or Indian tribe shall decide whether to hold a public hearing on the proposed NRHM route designation. The public shall be given 30 days prior notice of the public hearing which shall be conducted as described in paragraph (b)(2)(ii) of this section. Notice for both the comment period and the public hearing, if one is held, shall be given by publication in at least two newspapers of general circulation in the affected area or areas and shall contain a complete description of the proposed routing designation, together with the date, time, and location of any public hearings. Notice for both the comment period and any public hearing may also be published in the official register of the State.

(ii) If it is determined that a public hearing is necessary, the State or Indian tribe shall hold at least one public hearing on the record during which the public will be afforded the opportunity

[1] This document may be obtained from Safety Technology and Information Management Division, HHS–10, Federal Highway Administration, U.S. Department of Transportation, 400 7th Street, SW., Washington, D.C. 20590–0001.

to present their views and any information or data related to the proposed NRHM routing designation. The State shall make available to the public, upon payment of prescribed costs, copies of the transcript of the hearing, which shall include all exhibits and documents presented during the hearing or submitted for the record.

(3) *Consultation with others.* Prior to the establishment of any NRHM routing designation, the State or Indian tribe shall provide notice to, and consult with, officials of affected political subdivisions, States and Indian tribes, and any other affected parties. Such actions shall include the following:

(i) At least 60 days prior to establishing a routing designation, the State or Indian tribe shall provide notice, in writing, of the proposed routing designation to officials responsible for highway routing in all other affected States or Indian tribes. A copy of this notice may also be sent to all affected political subdivisions. This notice shall request approval, in writing, by those States or Indian tribes, of the proposed routing designations. If no response is received within 60 days from the day of receipt of the notification of the proposed routing designation, the routing designation shall be considered approved by the affected State or Indian tribe.

(ii) The manner in which consultation under this paragraph is conducted is left to the discretion of the State or Indian tribe.

(iii) The State or Indian tribe shall attempt to resolve any concern or disagreement expressed by any consulted official related to the proposed routing designation.

(iv) The State or Indian tribe shall keep a record of the names and addresses of the officials notified pursuant to this section and of any consultation or meeting conducted with these officials or their representatives. Such record shall describe any concern or disagreement expressed by the officials and any action undertaken to resolve such disagreement or address any concern.

(4) *Through routing.* In establishing any NRHM routing designation, the State or Indian tribe shall ensure through highway routing for the transportation of NRHM between adjacent areas. The term ''through highway routing'' as used in this paragraph means that the routing designation must ensure continuity of movement so as to not impede or unnecessarily delay the transportation of NRHM. The State or Indian tribe shall utilize the procedures established in paragraphs (b)(2) and (b)(3) of this section in meeting these requirements. In addition, the State or Indian tribe shall make a finding, supported by a risk analysis conducted in accordance with paragraph (b)(1) of this section, that the routing designation enhances public safety. If the risk analysis shows—

(i) That the current routing presents at least 50 percent more risk to the public than the deviation under the proposed routing designation, then the proposed routing designation may go into effect.

(ii) That the current routing presents a greater risk but less than 50 percent more risk to the public than the deviation under the proposed routing restriction, then the proposed routing restriction made by a State or Indian tribe shall only go into effect if it does not force a deviation of more than 25 miles or result in an increase of more than 25 percent of that part of a trip affected by the deviation, whichever is shorter, from the most direct route through a jurisdiction as compared to the intended deviation.

(iii) That the current route has the same or less risk to the public than the deviation resulting from the proposed routing designation, then the routing designation shall not be allowed.

(5) *Agreement of other States; burden on commerce.* Any NRHM routing designation which affects another State or Indian tribe shall be established, maintained, or enforced only if:

(i) It does not unreasonably burden commerce, and

(ii) It is agreed to by the affected State or Indian tribe within 60 days of receipt of the notice sent pursuant to paragraph (b)(3)(i) of this section, or it is approved by the Administrator pursuant to § 397.75.

(6) *Timeliness.* The establishment of a NRHM routing designation by any State or Indian tribe shall be completed within 18 months of the notice

given in either paragraph (b)(2) or (b)(3) of this section, whichever occurs first.

(7) *Reasonable routes to terminals and other facilities.* In establishing or providing for reasonable access to and from designated routes, the State or Indian tribe shall use the shortest practicable route considering the factors listed in paragraph (b)(9) of this section. In establishing any NRHM routing designation, the State or Indian tribe shall provide reasonable access for motor vehicles transporting NRHM to reach:

(i) Terminals,

(ii) Points of loading, unloading, pickup and delivery, and

(iii) Facilities for food, fuel, repairs, rest, and safe havens.

(8) *Responsibility for local compliance.* The States shall be responsible for ensuring that all of their political subdivisions comply with the provisions of this subpart. The States shall be responsible for resolving all disputes between such political subdivisions within their jurisdictions. If a State or any political subdivision thereof, or an Indian tribe chooses to establish, maintain, or enforce any NRHM routing designation, the Governor, or Indian tribe, shall designate a routing agency for the State or Indian tribe, respectively. The routing agency shall ensure that all NRHM routing designations within its jurisdiction comply with the Federal standards in this section. The State or Indian tribe shall comply with the public information and reporting requirements contained in § 397.73.

(9) *Factors to consider.* In establishing any NRHM routing designation, the State or Indian tribe shall consider the following factors:

(i) *Population density.* The population potentially exposed to a NRHM release shall be estimated from the density of the residents, employees, motorists, and other persons in the area, using United States census tract maps or other reasonable means for determining the population within a potential impact zone along a designated highway route. The impact zone is the potential range of effects in the event of a release. Special populations such as schools, hospitals, prisons, and senior citizen homes shall, among other things, be considered when determining the potential risk to the populations along a highway routing. Consideration shall be given to the amount of time during which an area will experience a heavy population density.

(ii) *Type of highway.* The characteristics of each alternative NRHM highway routing designation shall be compared. Vehicle weight and size limits, underpass and bridge clearances, roadway geometrics, number of lanes, degree of access control, and median and shoulder structures are examples of characteristics which a State or Indian tribe shall consider.

(iii) *Types and quantities of NRHM.* An examination shall be made of the type and quantity of NRHM normally transported along highway routes which are included in a proposed NRHM routing designation, and consideration shall be given to the relative impact zone and risks of each type and quantity.

(iv) *Emergency response capabilities.* In consultation with the proper fire, law enforcement, and highway safety agencies, consideration shall be given to the emergency response capabilities which may be needed as a result of a NRHM routing designation. The analysis of the emergency response capabilities shall be based upon the proximity of the emergency response facilities and their capabilities to contain and suppress NRHM releases within the impact zones.

(v) *Results of consultation with affected persons.* Consideration shall be given to the comments and concerns of all affected persons and entities provided during public hearings and consultations conducted in accordance with this section.

(vi) *Exposure and other risk factors.* States and Indian tribes shall define the exposure and risk factors associated with any NRHM routing designations. The distance to sensitive areas shall be considered. Sensitive areas include, but are not limited to, homes and commercial buildings; special populations in hospitals, schools, handicapped facilities, prisons and stadiums; water sources such as streams and lakes; and natural areas such as parks, wetlands, and wildlife reserves.

(vii) *Terrain considerations.* Topography along and adjacent to the proposed NRHM routing designation that

may affect the potential severity of an accident, the dispersion of the NRHM upon release and the control and clean up of NRHM if released shall be considered.

(viii) *Continuity of routes.* Adjacent jurisdictions shall be consulted to ensure routing continuity for NRHM across common borders. Deviations from the most direct route shall be minimized.

(ix) *Alternative routes.* Consideration shall be given to the alternative routes to, or resulting from, any NRHM route designation. Alternative routes shall be examined, reviewed, or evaluated to the extent necessary to demonstrate that the most probable alternative routing resulting from a routing designation is safer than the current routing.

(x) *Effects on commerce.* Any NRHM routing designation made in accordance with this subpart shall not create an unreasonable burden upon interstate or intrastate commerce.

(xi) *Delays in transportation.* No NRHM routing designations may create unnecessary delays in the transportation of NRHM.

(xii) *Climatic conditions.* Weather conditions unique to a highway route such as snow, wind, ice, fog, or other climatic conditions that could affect the safety of a route, the dispersion of the NRHM upon release, or increase the difficulty of controlling it and cleaning it up shall be given appropriate consideration.

(xiii) *Congestion and accident history.* Traffic conditions unique to a highway routing such as: traffic congestion; accident experience with motor vehicles, traffic considerations that could affect the potential for an accident, exposure of the public to any release, ability to perform emergency response operations, or the temporary closing of a highway for cleaning up any release shall be given appropriate consideration.

§ 397.73 Public information and reporting requirements.

(a) *Public information.* Information on NRHM routing designations must be made available by the States and Indian tribes to the public in the form of maps, lists, road signs or some combination thereof. If road signs are used, those signs and their placements must comply with the provisions of the Manual on Uniform Traffic Control Devices,[2] published by the FHWA, particularly the Hazardous Cargo signs identified as R14–2 and R14–3 shown in Section 2B–43 of that Manual.

(b) *Reporting and publishing requirements.* Each State or Indian tribe, through its routing agency, shall provide information identifying all NRHM routing designations which exist within their jurisdictions on November 14, 1994 to the FHWA, HHS–30, 400 7th St., SW., Washington, D.C. 20590–0001 by March 13,1995. The State or Indian tribe shall include descriptions of these routing designations, along with the dates they were established. This information may also be published in each State's official register of State regulations. Information on any subsequent changes or new NRHM routing designations shall be furnished within 60 days after establishment to the FHWA. This information will be available from the FHWA, consolidated by the FHWA, and published annually in whole or as updates in the FEDERAL REGISTER. Each State may also publish this information in its official register of State regulations.

(Approved by the Office of Management and Budget under control number 2125–0554)

§ 397.75 Dispute resolution.

(a) *Petition.* One or more States or Indian tribes may petition the Administrator to resolve a dispute relating to an agreement on a proposed NRHM routing designation. In resolving a dispute under these provisions, the Administrator will provide the greatest level of safety possible without unreasonably burdening commerce, and ensure compliance with the Federal standards established at § 397.71 of this subpart.

[2] This publication may be purchased from the Superintendent of Documents, U.S. Government Printing Office (GPO), Washington, D.C. 20402 and has Stock No. 050–001–81001–8. It is available for inspection and copying as prescribed in 49 CFR part 7, appendix D. See 23 CFR part 655, subpart F.

(b) *Filing.* Each petition for dispute resolution filed under this section must:

(1) Be submitted to the Administrator, Federal Highway Administration, U.S. Department of Transportation, 400 7th Street, SW., Washington, DC 20590–0001. Attention: HCC–10 Docket Room, Hazardous Materials Routing Dispute Resolution Docket.

(2) Identify the State or Indian tribe filing the petition and any other State, political subdivision, or Indian tribe whose NRHM routing designation is the subject of the dispute.

(3) Contain a certification that the petitioner has complied with the notification requirements of paragraph (c) of this section, and include a list of the names and addresses of each State, political subdivision, or Indian tribe official who was notified of the filing of the petition.

(4) Clearly set forth the dispute for which resolution is sought, including a complete description of any disputed NRHM routing designation and an explanation of how the disputed routing designation affects the petitioner or how it impedes through highway routing. If the routing designation being disputed results in alternative routing, then a comparative risk analysis for the designated route and the resulting alternative routing shall be provided.

(5) Describe any actions taken by the State or Indian tribe to resolve the dispute.

(6) Explain the reasons why the petitioner believes that the Administrator should intervene in resolving the dispute.

(7) Describe any proposed actions that the Administrator should take to resolve the dispute and how these actions would provide the greatest level of highway safety without unreasonably burdening commerce and would ensure compliance with the Federal standards established in this subpart.

(c) *Notice.* (1) Any State or Indian tribe that files a petition for dispute resolution under this subpart shall mail a copy of the petition to any affected State, political subdivision, or Indian tribe, accompanied by a statement that the State, political subdivision, or Indian tribe may submit comments regarding the petition to the Administrator within 45 days.

(2) By serving notice on any other State, political subdivision, or Indian tribe determined by the Administrator to be possibly affected by the issues in dispute or the resolution sought, or by publication in the FEDERAL REGISTER, the Administrator may afford those persons an opportunity to file written comments on the petition.

(3) Any affected State, political subdivision, or Indian tribe submitting written comments to the Administrator with respect to a petition filed under this section shall send a copy of the comments to the petitioner and certify to the Administrator as to having complied with this requirement. The Administrator may notify other persons participating in the proceeding of the comments and provide an opportunity for those other persons to respond.

(d) *Court actions.* After a petition for dispute resolution is filed in accordance with this section, no court action may be brought with respect to the subject matter of such dispute until a final decision has been issued by the Administrator or until the last day of the one-year period beginning on the day the Administrator receives the petition, whichever occurs first.

(e) *Hearings; alternative dispute resolution.* Upon receipt of a petition filed pursuant to paragraph (a) of this section, the Administrator may schedule a hearing to attempt to resolve the dispute and, if a hearing is scheduled, will notify all parties to the dispute of the date, time, and place of the hearing. During the hearing the parties may offer any information pertinent to the resolution of the dispute. If an agreement is reached, it may be stipulated by the parties, in writing, and, if the Administrator agrees, made part of the decision in paragraph (f) of this section. If no agreement is reached, the Administrator may take the matter under consideration and announce his or her decision in accordance with paragraph (f) of this section. Nothing in this section shall be construed as prohibiting the parties from settling the dispute or seeking other methods of alternative dispute resolution prior

to the final decision by the Administrator.

(f) *Decision*. The Administrator will issue a decision based on the petition, the written comments submitted by the parties, the record of the hearing, and any other information in the record. The decision will include a written statement setting forth the relevant facts and the legal basis for the decision.

(g) *Record*. The Administrator will serve a copy of the decision upon the petitioner and any other party who participated in the proceedings. A copy of each decision will be placed on file in the public docket. The Administrator may publish the decision or notice of the decision in the FEDERAL REGISTER.

§ 397.77 Judicial review of dispute decision.

Any State or Indian tribe adversely affected by the Administrator's decision under § 397.75 of this subpart may seek review by the appropriate district court of the United States under such proceeding only by filing a petition with such court within 90 days after such decision becomes final.

Subpart D—Routing of Class 7 (Radioactive) Materials

§ 397.101 Requirements for motor carriers and drivers.

(a) Except as provided in paragraph (b) of this section or in circumstances when there is only one practicable highway route available, considering operating necessity and safety, a carrier or any person operating a motor vehicle that contains a Class 7 (radioactive) material, as defined in 49 CFR 172.403, for which placarding is required under 49 CFR part 172 shall:

(1) Ensure that the motor vehicle is operated on routes that minimize radiological risk;

(2) Consider available information on accident rates, transit time, population density and activities, and the time of day and the day of week during which transportation will occur to determine the level of radiological risk; and

(3) Tell the driver which route to take and that the motor vehicle contains Class 7 (radioactive) materials.

(b) Except as otherwise permitted in this paragraph and in paragraph (f) of this section, a carrier or any person operating a motor vehicle containing a highway route controlled quantity of Class 7 (radioactive) materials, as defined in 49 CFR 173.403(l), shall operate the motor vehicle only over preferred routes.

(1) For purposes of this subpart, a preferred route is an Interstate System highway for which an alternative route is not designated by a State routing agency; a State-designated route selected by a State routing agency pursuant to § 397.103; or both of the above.

(2) The motor carrier or the person operating a motor vehicle containing a highway route controlled quantity of Class 7 (radioactive) materials, as defined in 49 CFR 173.403(l) and (y), shall select routes to reduce time in transit over the preferred route segment of the trip. An Interstate System bypass or Interstate System beltway around a city, when available, shall be used in place of a preferred route through a city, unless a State routing agency has designated an alternative route.

(c) A motor vehicle may be operated over a route, other than a preferred route, only under the following conditions:

(1) The deviation from the preferred route is necessary to pick up or deliver a highway route controlled quantity of Class 7 (radioactive) materials, to make necessary rest, fuel or motor vehicle repair stops, or because emergency conditions make continued use of the preferred route unsafe or impossible;

(2) For pickup and delivery not over preferred routes, the route selected must be the shortest-distance route from the pickup location to the nearest preferred route entry location, and the shortest-distance route to the delivery location from the nearest preferred route exit location. Deviation from the shortest-distance pickup or delivery route is authorized if such deviation:

(i) Is based upon the criteria in paragraph (a) of this section to minimize the radiological risk; and

(ii) Does not exceed the shortest-distance pickup or delivery route by more than 25 miles and does not exceed 5

times the length of the shortest-distance pickup or delivery route.

(iii) Deviations from preferred routes, or pickup or delivery routes other than preferred routes, which are necessary for rest, fuel, or motor vehicle repair stops or because of emergency conditions, shall be made in accordance with the criteria in paragraph (a) of this section to minimize radiological risk, unless due to emergency conditions, time does not permit use of those criteria.

(d) A carrier (or a designated agent) who operates a motor vehicle which contains a package of highway route controlled quantity of Class 7 (radioactive) materials, as defined in 49 CFR 173.403(l), shall prepared a written route plan and supply a copy before departure to the motor vehicle driver and a copy to the shipper (before departure for exclusive use shipments, as defined in 49 CFR 173.403(i), or within fifteen working days following departure for all other shipments). Any variation between the route plan and routes actually used, and the reason for it, shall be reported in an amendment to the route plan delivered to the shipper as soon as practicable but within 30 days following the deviation. The route plan shall contain:

(1) A statement of the origin and destination points, a route selected in compliance with this section, all planned stops, and estimated departure and arrival times; and

(2) Telephone numbers which will access emergency assistance in each State to be entered.

(e) No person may transport a package of highway route controlled quantity of Class 7 (radioactive) materials on a public highway unless:

(1) The driver has received within the two preceding years, written training on:

(i) Requirements in 49 CFR parts 172, 173, and 177 pertaining to the Class 7 (radioactive) materials transported;

(ii) The properties and hazards of the Class 7 (radioactive) materials being transported; and

(iii) Procedures to be followed in case of an accident or other emergency.

(2) The driver has in his or her immediate possession a certificate of training as evidence of training required by this section, and a copy is placed in his or her qualification file (see § 391.51 of this subchapter), showing:

(i) The driver's name and operator's license number;

(ii) The dates training was provided;

(iii) The name and address of the person providing the training;

(iv) That the driver has been trained in the hazards and characteristics of highway route controlled quantity of Class 7 (radioactive) materials; and

(v) A statement by the person providing the training that information on the certificate is accurate.

(3) The driver has in his or her immediate possession the route plan required by paragraph (d) of this section and operates the motor vehicle in accordance with the route plan.

(f) A person may transport irradiated reactor fuel only in compliance with a plan if required under 49 CFR 173.22(c) that will ensure the physical security of the material. Variation for security purposes from the requirements of this section is permitted so far as necessary to meet the requirements imposed under such a plan, or otherwise imposed by the U.S. Nuclear Regulatory Commission in 10 CFR part 73.

(g) Expect for packages shipped in compliance with the physical security requirements of the U.S. Nuclear Regulatory Commission in 10 CFR part 73, each carrier who accepts for transportation a highway route controlled quantity of Class 7 (radioactive) material (see 49 CFR 173.401(l)), shall, within 90 days following the acceptance of the package, file the following information concerning the transportation of each such package with the Associate Administrator for Safety and System Applications, Federal Highway Administration, Attn: Traffic Control Division, HHS–32, room 3419, 400 Seventh Street, SW., Washington, DC 20590–0001:

(1) The route plan required under paragraph (d) of this section, including all required amendments reflecting the routes actually used;

(2) A statement identifying the names and addresses of the shipper, carrier and consignee; and

(3) A copy of the shipping paper or the description of the Class 7 (radioactive) material in the shipment required by 49 CFR 172.202 and 172.203.

[57 FR 44131, Sept. 24, 1992]

§ 397.103 Requirements for State routing designations.

(a) The State routing agency, as defined in § 397.201(c), shall select routes to minimize radiological risk using ''Guidelines for Selecting Preferred Highway Routes for Highway Route Controlled Quantity Shipments of Radioactive Materials,'' or an equivalent routing analysis which adequately considers overall risk to the public. Designations must be preceded by substantive consultation with affected local jurisdictions and with any other affected States to ensure consideration of all impacts and continuity of designated routes.

(b) State routing agencies may designate preferred routes as an alternative to, or in addition to, one or more Interstate System highways, including interstate system bypasses, or Interstate System beltways.

(c) A State-designated route is effective when—

(1) The State gives written notice by certified mail, return receipt requested, to the Associate Administrator for Safety and System Applications, Federal Highway Administration, Attn: Traffic Control Division, HHS–32, Room 3419, Registry of State-designated routes, at the address above; and

(2) Receipt thereof is acknowledged in writing by the Associate Administrator.

(d) Upon request, the Office of Highway Safety, Traffic Control Division, HHS–32, room 3419, at the address above, will provide a list of State-designated preferred routes and a copy of the ''Guidelines for Selecting Preferred Highway Routes for Highway Route Controlled Quantity Shipments of Radioactive Materials.''

[57 FR 44131, Sept. 24, 1992]

Subpart E—Preemption Procedures

SOURCE: 57 FR 44132, Sept. 24, 1992, unless otherwise noted.

§ 397.201 Purpose and scope of the procedures.

(a) This subpart prescribes procedures by which:

(1) Any person, including a State, political subdivision thereof, or Indian tribe, directly affected by any highway routing designation for hazardous materials may apply to the Administrator for a determination as to whether that highway routing designation is preempted under 49 U.S.C. 5125, or § 397.69 or § 397.203 of this part; and

(2) A State, political subdivision thereof, or Indian tribe may apply to the Administrator for a waiver of preemption with respect to any highway routing designation that the State, political subdivision thereof, or Indian tribe acknowledges to be preempted by 49 U.S.C. 5125, or § 397.69 or § 397.203 of this part, or that has been determined by a court of competent jurisdiction to be so preempted.

(b) Unless otherwise ordered by the Administrator, an application for a preemption determination which includes an application for a waiver of preemption will be treated and processed solely as an application for a preemption determination.

(c) For purposes of this part:

Act means 49 U.S.C. 5101 *et seq.*, formerly known as the Hazardous Materials Transportation Act.

Administrator means the Federal Highway Administrator, who is the chief executive of the Federal Highway Administration, an agency of the United States Department of Transportation, or his/her designate.

Hazardous material means a substance or material, including a hazardous substance, which has been determined by the Secretary of Transportation to be capable of posing an unreasonable risk to health, safety, or property, when transported in commerce, and which has been so designated.

Indian tribe has the same meaning as contained in section 4 of the Indian Self-Determination and Education Act, 25 U.S.C. 450b.

Person means an individual, firm, copartnership, corporation, company, association, joint-stock association, including any trustee, receiver, assignee, or similar representative thereof, or government, Indian tribe, or agency or instrumentality of any government or Indian tribe when it offers hazardous materials for transportation in commerce or transports hazardous materials in furtherance of a commercial enterprise, but such term does not include the United States Postal Service.

Political subdivision includes a municipality; a public agency or other instrumentality of one or more States, or a public corporation, board, or commission established under the laws of one or more States.

Routing agency means the State highway agency or other State agency designated by the Governor of a State, or an agency designated by an Indian tribe, to supervise, coordinate, and approve the highway routing designations for that State or Indian tribe. Any highway routing designation made by a political subdivision of a State shall be considered a designation made by that State.

Routing designation includes any regulation, limitation, restriction, curfew, time of travel restriction, lane restriction, routing ban, port-of-entry designation, or route weight restriction applicable to the highway transportation of hazardous materials over a specific highway route or portion of a route.

State means a State of the United States, the District of Columbia, the Commonwealth of Puerto Rico, the Commonwealth of the Northern Mariana Islands, the Virgin Islands, American Samoa, Guam, or any other territory or possession of the United States designated by the Secretary.

[57 FR 44132, Sept. 24, 1992, as amended at 59 FR 51834, Oct. 12, 1994]

§ 397.203 Standards for determining preemption.

(a) Any highway routing designation established, maintained, or enforced by a State, political subdivision thereof, or Indian tribe is preempted if—

(1) Compliance with both the highway routing designation and any requirement under the Act or of a regulation issued under the Act is not possible;

(2) The highway routing designation as applied or enforced creates an obstacle to the accomplishment and execution of the Act or the regulations issued under the Act; or

(3) The highway routing designation is preempted pursuant to § 397.69(b) of this part.

(b) [Reserved]

[57 FR 44132, Sept. 24, 1992, as amended at 59 FR 51834, Oct. 12, 1994]

§ 397.205 Preemption application.

(a) Any person, including a State, political subdivision thereof, or Indian tribe directly affected by any highway routing designation of another State, political subdivision, or Indian tribe, may apply to the Administrator for a determination of whether that highway routing designation is preempted by the Act or § 397.203 of this subpart. The Administrator shall publish notice of the application in the FEDERAL REGISTER.

(b) Each application filed under this section for a determination must:

(1) Be submitted to the Administrator, Federal Highway Administration, U.S. Department of Transportation, Washington, DC 20590–0001. Attention: HCC–10 Docket Room, Hazardous Materials Preemption;

(2) Set forth a detailed description of the highway routing designation of the State, political subdivision thereof, or Indian tribe for which the determination is sought;

(3) If applicable, specify the provisions of the Act or the regulations issued under the Act under which the applicant seeks preemption of the highway routing designation of the State, political subdivision thereof, or Indian tribe;

(4) Explain why the applicant believes the highway routing designation of the State, political subdivision thereof, or Indian tribe should or should not be preempted under the standards of § 397.203; and

(5) State how the applicant is affected by the highway routing designation of the State, political subdivision thereof, or Indian tribe.

(c) The filing of an application for a determination under this section does not constitute grounds for noncompliance with any requirement of the Act or any regulation issued under the Act.

(d) Once the Administrator has published notice in the FEDERAL REGISTER of an application received under paragraph (a) of this section, no applicant for such determination may seek relief with respect to the same or substantially the same issue in any court until final action has been taken on the application or until 180 days after filing of the application, whichever occurs first. Nothing in this section shall be construed as prohibiting any person, including a State, political subdivision thereof, or Indian tribe, directly affected by any highway routing designation from seeking a determination of preemption in any court of competent jurisdiction in lieu of applying to the Administrator under paragraph (a) of this section.

§ 397.207 Preemption notice.

(a) If the applicant is other than a State, political subdivision thereof, or Indian tribe, the applicant shall mail a copy of the application to the State, political subdivision thereof, or Indian tribe concerned, accompanied by a statement that comments may be submitted regarding the application to the Administrator within 45 days. The application filed with the Administrator must include a certification that the applicant has complied with this paragraph and must include the names and addresses of each official to whom a copy of the application was sent.

(b) The Administrator may afford interested persons an opportunity to file written comments on the application by serving notice on any persons readily identifiable by the Administrator as persons who will be affected by the ruling sought or by publication in the FEDERAL REGISTER.

(c) Each person submitting written comments to the Administrator with respect to an application filed under this section shall send a copy of the comments to the applicant and certify to the Administrator that he or she has complied with this requirement. The Administrator may notify other persons participating in the proceeding of the comments and provide an opportunity for those other persons to respond.

§ 397.209 Preemption processing.

(a) The Administrator may initiate an investigation of any statement in an application and utilize in his or her evaluation any relevant facts obtained by that investigation. The Administrator may solicit and accept submissions from third persons relevant to an application and will provide the applicant an opportunity to respond to all third person submissions. In evaluating an application, the Administrator may consider any other source of information. The Administrator may convene a hearing or conference, if a hearing or conference will advance the evaluation of the application.

(b) The Administrator may dismiss the application without prejudice if:

(1) he or she determines that there is insufficient information upon which to base a determination; or

(2) he or she requests additional information from the applicant and it is not submitted.

§ 397.211 Preemption determination.

(a) Upon consideration of the application and other relevant information received, the Administrator issues a determination.

(b) Notwithstanding that an application for a determination has not been filed under § 397.205, the Administrator, on his or her own initiative, may issue a determination as to whether a particular highway routing designation of a State, political subdivision thereof, or Indian tribe is preempted under the Act or the regulations issued under the Act.

(c) The determination includes a written statement setting forth the relevant facts and the legal basis for the determination, and provides that any person aggrieved thereby may file a petition for reconsideration within 20 days in accordance with § 397.223.

(d) Unless the determination is issued pursuant to paragraph (b) of this section, the Administrator serves a copy

of the determination upon the applicant. In all preemption determinations, the Administrator serves a copy of the determination upon any other person who participated in the proceeding or who is readily identifiable by the Administrator as affected by the determination. A copy of each determination is placed on file in the public docket. The Administrator may publish the determination or notice of the determination in the FEDERAL REGISTER.

(e) If no petition for reconsideration is filed within 20 days in accordance with § 397.223, a determination issued under this section constitutes the final agency decision as to whether a particular highway routing designation of a State, political subdivision thereof, or Indian tribe is preempted under the Act or regulations issued thereunder. The fact that a determination has not been issued under this section with respect to a particular highway routing designation of a State, political subdivision thereof, or Indian tribe carries no implication as to whether the requirement is preempted under the Act or regulations issued thereunder.

§ 397.213 Waiver of preemption application.

(a) Any State, political subdivision thereof, or Indian tribe may apply to the Administrator for a waiver of preemption with respect to any highway routing designation that the State, political subdivision thereof, or Indian tribe acknowledges to be preempted by the Act, § 397.203 of this subpart, or a court of competent jurisdiction. The Administrator may waive preemption with respect to such requirement upon a determination that such requirement—

(1) Affords an equal or greater level of protection to the public than is afforded by the requirements of the Act or regulations issued under the Act, and

(2) Does not unreasonably burden commerce.

(b) Each application filed under this section for a waiver of preemption determination must:

(1) Be submitted to the Administrator, Federal Highway Administration, U.S. Department of Transportation, Washington, DC 20590–0001. Attention: HCC–10 Docket Room, Hazardous Materials Preemption Docket;

(2) Set forth a detailed description of the highway routing designation of the State, political subdivision thereof, or Indian tribe for which the determination is being sought;

(3) Include a copy of any relevant court order or determination issued pursuant to § 397.211;

(4) Contain an express acknowledgment by the applicant that the highway routing designation of the State, political subdivision thereof, our Indian tribe is preempted under the Act or the regulations issued under the Act, unless it has been so determined by a court of competent jurisdiction or in a determination issued under this subpart;

(5) Specify each provision of the Act or the regulations issued under the Act that preempts the highway routing designation of the State, political subdivision thereof, or Indian tribe;

(6) State why the applicant believes that the highway routing designation of the State, political subdivision thereof, or Indian tribe affords an equal or greater level of protection to the public than is afforded by the requirements of the Act or the regulations issued under the Act;

(7) State why the applicant believes that the highway routing designation of the State, political subdivision thereof, or Indian tribe does not unreasonably burden commerce; and

(8) Specify what steps the State, political subdivision thereof, or Indian tribe is taking to administer and enforce effectively the preempted requirement.

§ 397.215 Waiver notice.

(a) The applicant State, political subdivision thereof, or Indian tribe shall mail a copy of the application and any subsequent amendments or other documents relating to the application to each person whom the applicant reasonably ascertains will be affected by the determination sought. The copy of the application must be accompanied by a statement that the person may submit comments regarding the application to the Administrator within 45 days. The application filed with the

Administrator must include a certification with the application has complied with this paragraph and must include the names and addresses of each person to whom the application was sent.

(b) Notwithstanding the provisions of paragraph (a) of this section, if the State, political subdivision thereof, or Indian tribe determines that compliance with paragraph (a) of this section would be impracticable, the applicant shall:

(1) Comply with the requirements of paragraph (a) of this section with regard to those persons whom it is reasonable and practicable to notify; and

(2) Include with the application filed with the Administrator a description of the persons or class or classes of persons to whom notice was not sent.

(c) The Administrator may require the applicant to provide notice in addition to that required by paragraphs (a) and (b) of this section, or may determine that the notice required by paragraph (a) of this section is not impracticable, or that notice should be published in the FEDERAL REGISTER.

(d) The Administrator may serve notice on any other persons readily identifiable by the Administrator as persons who will be affected by the determination sought and may afford those persons an opportunity to file written comments on the application.

(e) Any person submitting written comments to the Administrator with respect to an application filed under this section shall send a copy of the comments to the applicant. The person shall certify to the Administrator that he or she has complied with the requirements of this paragraph. The Administrator may notify other persons participating in the proceeding of the comments and provide an opportunity for those other persons to respond.

§ 397.217 Waiver processing.

(a) The Administrator may initiate an investigation of any statement in an application and utilize any relevant facts obtained by that investigation. The Administrator may solicit and accept submissions from third persons relevant to an application and will provide the applicant an opportunity to respond to all third person submissions. In evaluating an application, the Administrator may convene a hearing or conference, if a hearing or conference will advance the evaluation of the application.

(b) The Administrator may dismiss the application without prejudice if:

(1) he or she determines that there is insufficient information upon which to base a determination;

(2) Upon his or her request, additional information is not submitted by the applicant; or

(3) The applicant fails to provide the notice required by this subpart.

(c) Except as provided in this subpart, the Administrator will only consider an application for a waiver of preemption determination if:

(1) The applicant expressly acknowledges in its application that the highway routing designation of the State, political subdivision thereof, or Indian tribe for which the determination is sought is preempted by the Act or the regulations thereunder; or

(2) The highway routing designation of the State, political subdivision thereof, or Indian tribe has been determined by a court of competent jurisdiction or in a determination issued pursuant to § 397.211 to be preempted by the Act or the regulations issued thereunder.

(d) When the Administrator has received all substantive information necessary to process an application for a waiver of preemption determination, notice of that fact will be served upon the applicant. Additional notice to all other persons who received notice of the proceeding may be served by publishing a notice in the FEDERAL REGISTER.

§ 397.219 Waiver determination and order.

(a) Upon consideration of the application and other relevant information received or obtained during the proceeding, the Administrator issues an order setting forth his or her determination.

(b) The Administrator may issue a waiver of preemption order only if he or she finds that the requirement of the State, political subdivision thereof, or Indian tribe affords the public a level of safety at least equal to that afforded by the requirements of the Act

and the regulations issued under the Act and does not unreasonably burden commerce. In determining whether the requirement of the State, political subdivision thereof, or Indian tribe unreasonably burdens commerce, the Administrator may consider the following factors:

(1) The extent to which increased costs and impairment of efficiency result from the highway routing designation of the State, political subdivision thereof, or Indian tribe;

(2) Whether the highway routing designation of the State, political subdivision thereof, or Indian tribe has a rational basis;

(3) Whether the highway routing designation of the State, political subdivision thereof, or Indian tribe achieves its stated purpose; and

(4) Whether there is need for uniformity with regard to the subject concerned and if so, whether the highway routing designation of the State, political subdivision thereof, or Indian tribe competes or conflicts with those of other States, political subdivisions thereof, or Indian tribes.

(c) The order includes a written statement setting forth the relevant facts and the legal basis for the determination, and provides that any person aggrieved by the order may file a petition for reconsideration in accordance with § 397.223.

(d) The Administrator serves a copy of the order upon the applicant, any other person who participated in the proceeding and upon any other person readily identifiable by the Administrator as one who may be affected by the order. A copy of each order is placed on file in the public docket. The Administrator may publish the order or notice of the order in the FEDERAL REGISTER.

(e) If no petition for reconsideration is filed within 20 days in accordance with § 397.223, an order issued under this section constitutes the final agency decision regarding whether a particular requirement of a State, political subdivision thereof, or Indian tribe is preempted under the Act or any regulations issued thereunder, or whether preemption is waived.

§ 397.221 Timeliness.

If the Administrator fails to take action on the application within 90 days of serving the notice required by § 397.217(d), the applicant may treat the application as having been denied in all respects.

§ 397.223 Petition for reconsideration.

(a) Any person aggrieved by an order issued under § 397.211 or § 397.219 may file a petition for reconsideration with the Administrator. The petition must be filed within 20 days of service of the determination or order issued under the above sections.

(b) The petition must contain a concise statement of the basis for seeking reconsideration, including any specific factual or legal errors, or material information not previously available.

(c) The petitioner shall mail a copy of the petition to each person who participated, either as an applicant or routing, in the waiver of preemption proceeding, accompanied by a statement that the person may submit comments concerning the petition to the Administrator within 20 days. The petition filed with the Administrator must contain a certification that the petitioner has complied with this paragraph and include the names and addresses of all persons to whom a copy of the petition was sent.

(d) The Administrator's decision under this section constitutes the final agency decision. If no petition for reconsideration is filed under this section, then the determination issued under § 397.211 or § 397.219 becomes the final agency decision at the end of the 20 day period.

§ 397.225 Judicial review.

A party to a proceeding under § 397.205(a), § 397.213(a), or § 397.223(a) may seek review by the appropriate district court of the United States of the decision of the Administrator under such proceeding only by filing a petition with such court within 60 days after the final agency decision.

PART 398—TRANSPORTATION OF MIGRANT WORKERS

Sec.

398.1 Definitions.

398.2 Applicability.
398.3 Qualifications of drivers or operators.
398.4 Driving of motor vehicles.
398.5 Parts and accessories necessary for safe operation.
398.6 Hours of service of drivers; maximum driving time.
398.7 Inspection and maintenance of motor vehicles.
398.8 Administration inspection of motor vehicles in operation.

AUTHORITY: Secs. 203, 204, 49 Stat. 544, as amended, 546, as amended; 49 U.S.C. 303, 304.

SOURCE: 33 FR 19765, Dec. 25, 1968, unless otherwise noted.

§ 398.1 Definitions.

(a) *Migrant worker.* ''Migrant worker'' means any individual proceeding to or returning from employment in agriculture as defined in section 3(f) of the Fair Labor Standards Act of 1938, as amended (29 U.S.C. 203(f)) or section 3121(g) of the Internal Revenue Code of 1954 (26 U.S.C. 3121(g)).

(b) *Carrier of migrant workers by motor vehicle.* ''Carrier of migrant worker by motor vehicle'' means any person, including any ''contract carrier by motor vehicle'', but not including any ''common carrier by motor vehicle'', who or which transports in interstate or foreign commerce at any one time three or more migrant workers to or from their employment by any motor vehicle other than a passenger automobile or station wagon, except a migrant worker transporting himself/herself or his/her immediate family.

(c) *Motor carrier.* ''Motor carrier'' means any carrier of migrant workers by motor vehicle as defined in paragraph (b) of this section.

(d) *Motor vehicle.* ''Motor vehicle'' means any vehicle, machine, tractor, trailer, or semitrailer propelled or drawn by mechanical power and used upon the highways in the transportation of passengers or property, or any combination thereof, determined by the Administration, but does not include a passenger automobile or station wagon, any vehicle, locomotive, or car operated exclusively on a rail or rails, or a trolley bus operated by electric power derived from a fixed overhead wire, furnishing local passenger transportation in street-railway service.

(e) *Bus.* ''Bus'' means any motor vehicle designed, constructed, and used for the transportation of passengers: Except passenger automobiles or station wagons other than taxicabs.

(f) *Truck.* ''Truck'' means any self-propelled motor vehicle except a truck tractor, designed and constructed primarily for the transportation of property.

(g) *Truck tractor.* ''Truck tractor'' means a self-propelled motor vehicle designed and used primarily for drawing other vehicles and not so constructed as to carry a load other than a part of the weight of the vehicle and load so drawn.

(h) *Semitrailer.* ''Semitrailer'' means any motor vehicle other than a ''pole trailer'', with or without motive power designed to be drawn by another motor vehicle and so constructed that some part of its weight rests upon the towing vehicle.

(i) *Driver or operator.* ''Driver or operator'' means any person who drives any motor vehicle.

(j) *Highway.* ''Highway'' means the entire width between the boundary lines of every way publicly maintained when any part thereof is open to the use of the public for purposes of vehicular traffic.

§ 398.2 Applicability.

The regulations prescribed in this part shall be applicable to motor carriers of migrant workers, as defined in § 398.1(b), only in the case of transportation of any migrant worker for a total distance of more than seventy-five miles, and then only if such transportation is across the boundary line of any State, the District of Columbia, or Territory of the United States, or a foreign country.

[33 FR 19765, Dec. 25, 1968, as amended at 40 FR 44557, Sept. 29, 1975]

§ 398.3 Qualifications of drivers or operators.

(a) *Compliance required.* Every motor carrier, and its officers, agents, representatives and employees who drive motor vehicles or are responsible for the hiring, supervision, training, assignment or dispatching of drivers shall comply and be conversant with the requirements of this part.

(b) *Minimum physical requirements.* No person shall drive, nor shall any motor carrier require or permit any person to drive, any motor vehicle unless such person possesses the following minimum qualifications:

(1) No loss of foot, leg, hand or arm,

(2) No mental, nervous, organic, or functional disease, likely to interfere with safe driving.

(3) No loss of fingers, impairment of use of foot, leg, fingers, hand or arm, or other structural defect or limitation, likely to interfere with safe driving.

(4) *Eyesight:* Visual acuity of at least 20/40 (Snellen) in each eye either without glasses or by correction with glasses; form field of vision in the horizontal meridian shall not be less than a total of 140 degrees; ability to distinguish colors red, green and yellow; drivers requiring correction by glasses shall wear properly prescribed glasses at all times when driving.

(5) *Hearing:* Hearing shall not be less than 10/20 in the better ear, for conversational tones, without a hearing aid.

(6) *Liquor, narcotics and drugs:* Shall not be addicted to the use of narcotics or habit forming drugs, or the excessive use of alcoholic beverages or liquors.

(7) *Initial and periodic physical examination of drivers:* No person shall drive nor shall any motor carrier require or permit any person to drive any motor vehicle unless within the immediately preceding 36 month period such person shall have been physically examined and shall have been certified in accordance with the provisions of paragraph (b)(8) of this section by a licensed doctor of medicine or osteopathy as meeting the requirements of this subsection.

(8) *Certificate of physical examination:* Every motor carrier shall have in its files at its principal place of business for every driver employed or used by it a legible certificate of a licensed doctor of medicine or osteopathy based on a physical examination as required by paragraph (b)(7) of this section or a legible photographically reproduced copy thereof, and every driver shall have in his/her possession while driving, such a certificate or a photographically reproduced copy thereof covering himself/herself.

(9) *Doctor's certificate:* The doctor's certificate shall certify as follows:

DOCTOR'S CERTIFICATE

(Driver of Migrant Workers)

This is to certify that I have this day examined _____ in accordance with § 398.3(b) of the Federal Motor Carrier Safety Regulations of the Federal Highway Administration and that I find him/her

Qualified under said rules ☐

Qualified only when wearing glasses ☐

I have kept on file in my office a completed examination.

_____

(Date)

(Place)

(Signature of examining doctor)

_____

(Address of doctor)

Signature of driver _____

Address of driver _____

(c) *Minimum age and experience requirements.* No person shall drive, nor shall any motor carrier require or permit any person to drive, any motor vehicle unless such person possesses the following minimum qualifications:

(1) *Age.* Minimum age shall be 21 years.

(2) *Driving skill.* Experience in driving some type of motor vehicle (including private automobiles) for not less than one year, including experience throughout the four seasons.

(3) *Knowledge of regulations.* Familiarity with the rules and regulations prescribed in this part pertaining to the driving of motor vehicles.

(4) *Knowledge of English.* Every driver shall be able to read and speak the English language sufficiently to understand highway traffic signs and signals and directions given in English and to respond to official inquiries.

(5) *Driver's permit.* Possession of a valid permit qualifying the driver to operate the type of vehicle driven by him/her in the jurisdiction by which the permit is issued.

[33 FR 19765, Dec. 25, 1968, as amended at 40 FR 44557, Sept. 29, 1975]

§ 398.4 Driving of motor vehicles.

(a) *Compliance required.* Every motor carrier shall comply with the requirements of this part, shall instruct its officers, agents, representatives and drivers with respect thereto, and shall take such measures as are necessary to insure compliance therewith by such persons. All officers, agents, representatives, drivers, and employees of motor carriers directly concerned with the management, maintenance, operation, or driving of motor vehicles, shall comply with and be conversant with the requirements of this part.

(b) *Driving rules to be obeyed.* Every motor vehicle shall be driven in accordance with the laws, ordinances, and regulations of the jurisdiction in which it is being operated, unless such laws, ordinances and regulations are at variance with specific regulations of this Administration which impose a greater affirmative obligation or restraint.

(c) *Driving while ill or fatigued.* No driver shall drive or be required or permitted to drive a motor vehicle while his/her ability or alertness is so impaired through fatigue, illness, or any other cause as to make it unsafe for him/her to begin or continue to drive, except in case of grave emergency where the hazard to passengers would be increased by observance of this section and then only to the nearest point at which the safety of passengers is assured.

(d) *Alcoholic beverages.* No driver shall drive or be required or permitted to drive a motor vehicle, be in active control of any such vehicle, or go on duty or remain on duty, when under the influence of any alcoholic beverage or liquor, regardless of its alcoholic content, nor shall any driver drink any such beverage or liquor while on duty.

(e) *Schedules to conform with speed limits.* No motor carrier shall permit nor require the operation of any motor vehicle between points in such period of time as would necessitate the vehicle being operated at speeds greater than those prescribed by the jurisdictions in or through which the vehicle is being operated.

(f) *Equipment and emergency devices.* No motor vehicle shall be driven unless the driver thereof shall have satisfied himself/herself that the following parts, accessories, and emergency devices are in good working order; nor shall any driver fail to use or make use of such parts, accessories, and devices when and as needed:

Service brakes, including trailer brake connections.
Parking (hand) brake.
Steering mechanism.
Lighting devices and reflectors.
Tires.
Horn.
Windshield wiper or wipers.
Rear-vision mirror or mirrors.
Coupling devices.
Fire extinguisher, at least one properly mounted.
Road warning devices, at least one red burning fusee and at least three flares (oil burning pot torches), red electric lanterns, or red emergency reflectors.

(g) *Safe loading*—(1) *Distribution and securing of load.* No motor vehicle shall be driven nor shall any motor carrier permit or require any motor vehicle to be driven if it is so loaded, or if the load thereon is so improperly distributed or so inadequately secured, as to prevent its safe operation.

(2) *Doors, tarpaulins, tailgates and other equipment.* No motor vehicle shall be driven unless the tailgate, tailboard, tarpaulins, doors, all equipment and rigging used in the operation of said vehicle, and all means of fastening the load, are securely in place.

(3) *Interference with driver.* No motor vehicle shall be driven when any object obscures his/her view ahead, or to the right or left sides, or to the rear, or interferes with the free movement of his/her arms or legs, or prevents his/her free and ready access to the accessories required for emergencies, or prevents the free and ready exit of any person from the cab or driver's compartment.

(4) *Property on motor vehicles.* No vehicle transporting persons and property shall be driven unless such property is stowed in a manner which will assure:

(i) Unrestricted freedom of motion to the driver for proper operation of the vehicle;

(ii) Unobstructed passage to all exits by any person; and

(iii) Adequate protection to passengers and others from injury as a result of the displacement or falling of such articles.

(5) *Maximum passengers on motor vehicles.* No motor vehicle shall be driven if the total number of passengers exceeds the seating capacity which will be permitted on seats prescribed in § 398.5(f) when that section is effective. All passengers carried on such vehicle shall remain seated while the motor vehicle is in motion.

(h) *Rest and meal stops.* Every carrier shall provide for reasonable rest stops at least once between meal stops. Meal stops shall be made at intervals not to exceed six hours and shall be for a period of not less than 30 minutes duration.

(i) *Kinds of motor vehicles in which workers may be transported.* Workers may be transported in or on only the following types of motor vehicles: A bus, a truck with no trailer attached, or a semitrailer attached to a truck-tractor provided that no other trailer is attached to the semitrailer. Closed vans without windows or means to assure ventilation shall not be used.

(j) *Limitation on distance of travel in trucks.* Any truck when used for the transportation of migrant workers, if such workers are being transported in excess of 600 miles, shall be stopped for a period of not less than eight consecutive hours either before or upon completion of 600 miles travel, and either before or upon completion of any subsequent 600 miles travel to provide rest for drivers and passengers.

(k) *Lighting devices and reflectors.* No motor vehicle shall be driven when any of the required lamps or reflectors are obscured by the tailboard, by any and all lighting devices required by subpart B of part 393 of this subchapter shall be lighted during darkness or at any other time when there is not sufficient light to render vehicles and persons visible upon the highway at a distance of 500 feet.

(l) *Ignition of fuel; prevention.* No driver or any employee of a motor carrier shall:

(1) Fuel a motor vehicle with the engine running, except when it is necessary to run the engine to fuel the vehicle;

(2) Smoke or expose any open flame in the vicinity of a vehicle being fueled;

(3) Fuel a motor vehicle unless the nozzle of the fuel hose is continuously in contact with the intake pipe of the fuel tank;

(4) Permit any other person to engage in such activities as would be likely to result in fire or explosion.

(m) *Reserve fuel.* No supply of fuel for the propulsion of any motor vehicle or for the operation of any accessory thereof shall be carried on the motor vehicle except in a properly mounted fuel tank or tanks.

(n) *Driving by unauthorized person.* Except in case of emergency, no driver shall permit a motor vehicle to which he/she is assigned to be driven by any person not authorized to drive such vehicle by the motor carrier in control thereof.

(o) *Protection of passengers from weather.* No motor vehicle shall be driven while transporting passengers unless the passengers therein are protected from inclement weather conditions such as rain, snow, or sleet, by use of the top or protective devices required by § 398.5(f).

(p) *Unattended vehicles; precautions.* No motor vehicle shall be left unattended by the driver until the parking brake has been securely set, the wheels chocked, and all reasonable precautions have been taken to prevent the movement of such vehicle.

(q) *Railroad grade crossings; stopping required; sign on rear of vehicle.* Every motor vehicle shall, upon approaching any railroad grade crossing, make a full stop not more than 50 feet, nor less than 15 feet from the nearest rail of such railroad grade crossing, and shall not proceed until due caution has been taken to ascertain that the course is clear; except that a full stop need not be made at:

(1) A street car crossing within a business or residence district of a municipality;

(2) A railroad grade crossing where a police officer or a traffic-control signal (not a railroad flashing signal) directs traffic to proceed;

(3) An abandoned or exempted grade crossing which is clearly marked as such by or with the consent of the proper state authority, when such marking can be read from the driver's position.

All such motor vehicles shall display a sign on the rear reading, ''This Vehicle Stops at Railroad Crossings.''

[33 FR 19765, Dec. 25, 1968, as amended at 40 FR 44557, Sept. 29, 1975]

§398.5 Parts and accessories necessary for safe operation.

(a) *Compliance.* Every motor carrier and its officers, agents, drivers, representatives and employees directly concerned with the installation and maintenance of equipment and accessories shall comply and be conversant with the requirements and specifications of this part, and no motor carrier shall operate any motor vehicle, or cause or permit it to be operated, unless it is equipped in accordance with said requirements and specifications.

(b) *Lighting devices.* Every motor vehicle shall be equipped with the lighting devices and reflectors required by subpart B of part 393 of this subchapter.

(c) *Brakes.* Every motor vehicle shall be equipped with brakes as required by subpart C of part 393 of this subchapter, except §393.44 of this subchapter, and shall satisfy the braking performance requirements contained therein.

(d) *Coupling devices; fifth wheel mounting and locking.* The lower half of every fifth wheel mounted on any truck-tractor or dolly shall be securely affixed to the frame thereof by U-bolts of adequate size, securely tightened, or by other means providing at least equivalent security. Such U-bolts shall not be of welded construction. The installation shall be such as not to cause cracking, warping, or deformation of the frame. Adequate means shall be provided positively to prevent the shifting of the lower half of a fifth wheel on the frame to which it is attached. The upper half of every fifth wheel shall be fastened to the motor vehicle with at least the security required for the securing of the lower half to a truck-tractor or dolly. Locking means shall be provided in every fifth wheel mechanism including adapters when used, so that the upper and lower halves may not be separated without the operation of a positive manual release. A release mechanism operated by the driver from the cab shall be deemed to meet this requirement. On fifth wheels designed and constructed as to be readily separable, the fifth wheel locking devices shall apply automatically on coupling for any motor vehicle the date of manufacture of which is subsequent to December 31, 1952.

(e) *Tires.* Every motor vehicle shall be equipped with tires of adequate capacity to support its gross weight. No motor vehicle shall be operated on tires which have been worn so smooth as to expose any tread fabric or which have any other defect likely to cause failure. No vehicle shall be operated while transporting passengers while using any tire which does not have tread configurations on that part of the tire which is in contact with the road surface. No vehicle transporting passengers shall be operated with regrooved, re-capped, or re-treaded tires on front wheels.

(f) *Passenger compartment.* Every motor vehicle transporting passengers, other than a bus, shall have a passenger compartment meeting the following requirements:

(1) *Floors.* A substantially smooth floor, without protruding obstructions more than two inches high, except as are necessary for securing seats or other devices to the floor, and without cracks or holes.

(2) *Sides.* Side walls and ends above the floor at least 60 inches high, by attachment of sideboards to the permanent body construction if necessary. Stake body construction shall be construed to comply with this requirement only if all six-inch or larger spaces between stakes are suitably closed to prevent passengers from falling off the vehicle.

(3) *Nails, screws, splinters.* The floor and the interior of the sides and ends of the passenger-carrying space shall be free of inwardly protruding nails, screws, splinters, or other projecting objects likely to be injurious to passengers or their apparel.

(4) *Seats.* On and after November 1, 1957, a seat shall be provided for each worker transported. The seats shall be: Securely attached to the vehicle during the course of transportation; not less than 16 inches nor more than 19 inches above the floor; at least 13 inches deep; equipped with backrests

extending to a height of at least 36 inches above the floor, with at least 24 inches of space between the backrests or between the edges of the opposite seats when face to face; designed to provide at least 18 inches of seat for each passenger; without cracks more than two inches wide, and the exposed surfaces, if made of wood, planed or sanded smooth and free of splinters.

(5) *Protection from weather.* Whenever necessary to protect the passengers from inclement weather conditions, be equipped with a top at least 80 inches high above the floor and facilities for closing the sides and ends of the passenger-carrying compartment. Tarpaulins or other such removable devices for protection from the weather shall be secured in place.

(6) *Exit.* Adequate means of ingress and egress to and from the passenger space shall be provided on the rear or at the right side. Such means of ingress and egress shall be at least 18 inches wide. The top and the clear opening shall be at least 60 inches high, or as high as the side wall of the passenger space if less than 60 inches. The bottom shall be at the floor of the passenger space.

(7) *Gates and doors.* Gates or doors shall be provided to close the means of ingress and egress and each such gate or door shall be equipped with at least one latch or other fastening device of such construction as to keep the gate or door securely closed during the course of transportation; and readily operative without the use of tools.

(8) *Ladders or steps.* Ladders or steps for the purpose of ingress or egress shall be used when necessary. The maximum verticle spacing of footholds shall not exceed 12 inches, except that the lowest step may be not more than 18 inches above the ground when the vehicle is empty.

(9) *Hand holds.* Hand holds or devices for similar purpose shall be provided to permit ingress and egress without hazard to passengers.

(10) *Emergency exit.* Vehicles with permanently affixed roofs shall be equipped with at least one emergency exit having a gate or door, latch and hand hold as prescribed in paragraphs (f) (7) and (9) of this section and located on a side or rear not equipped with the exit prescribed in paragraph (f)(6) of this section.

(11) *Communication with driver.* Means shall be provided to enable the passengers to communicate with the driver. Such means may include telephone, speaker tubes, buzzers, pull cords, or other mechanical or electrical means.

(g) *Protection from cold.* Every motor vehicle shall be provided with a safe means of protecting passengers from cold or undue exposure, but in no event shall heaters of the following types be used:

(1) *Exhaust heaters.* Any type of exhaust heater in which the engine exhaust gases are conducted into or through any space occupied by persons or any heater which conducts engine compartment air into any such space.

(2) *Unenclosed flame heaters.* Any type of heater employing a flame which is not fully enclosed.

(3) *Heaters permitting fuel leakage.* Any type of heater from the burner of which there could be spillage or leakage of fuel upon the tilting or overturning of the vehicle in which it is mounted.

(4) *Heaters permitting air contamination.* Any heater taking air, heated or to be heated, from the engine compartment or from direct contact with any portion of the exhaust system; or any heater taking air in ducts from the outside atmosphere to be conveyed through the engine compartment, unless said ducts are so constructed and installed as to prevent contamination of the air so conveyed by exhaust or engine compartment gases.

(5) Any heater not securely fastened to the vehicle.

§ 398.6 Hours of service of drivers; maximum driving time.

No person shall drive nor shall any motor carrier permit or require a driver employed or used by it to drive or operate for more than 10 hours in the aggregate (excluding rest stops and stops for meals) in any period of 24 consecutive hours, unless such driver be afforded eight consecutive hours rest immediately following the 10 hours aggregate driving. The term ''24 consecutive hours'' as used in this part means any such period starting at the time the driver reports for duty.

§ 398.7 Inspection and maintenance of motor vehicles.

Every motor carrier shall systematically inspect and maintain or cause to be systematically maintained, all motor vehicles and their accessories subject to its control, to insure that such motor vehicles and accessories are in safe and proper operating condition.

§ 398.8 Administration inspection of motor vehicles in operation.

(a) *Administration personnel authorized to perform inspections.* All persons designated as Special Agents of the Federal Highway Administration, as detailed in appendix B of chapter III of this title, are authorized to enter upon and perform inspections of motor carrier's vehicles in operation.

(b) *Prescribed inspection report.* Form MCS 63, Driver-Equipment Compliance Check, shall be used to record findings from motor vehicles selected for final inspection by authorized Administration employees.

(c) *Motor vehicles declared ''out of service''.* (1) Authorized Administration employees shall declare and mark ''out of service'' any motor vehicle which by reason of its mechanical condition or loading is so imminently hazardous to operate as to be likely to cause an accident or a breakdown. Form MCS 64, ''Out of Service Vehicle'' sticker shall be used to mark vehicles ''out of service.''

(2) No motor carrier shall require or permit any person to operate nor shall any person operate any motor vehicle declared and marked, ''out of service'' until all repairs required by the ''out of service notice'' on Form MCS 63 have been satisfactorily completed. The term operate as used in this section shall include towing the vehicle; provided, however, that vehicles marked ''out of service'' may be towed away by means of a vehicle using a crane or hoist; and provided further, that the vehicle combination consisting of the emergency towing vehicle and the ''out of service'' vehicle meets the performance requirements of § 393.52.

(3) No person shall remove the ''Out of Service Vehicle'' sticker from any motor vehicle prior to completion of all repairs required by the ''out of service notice'' on Form MCS 63.

(4) The person or persons completing the repairs required by the ''out of service notice'' shall sign the ''Certification of Repairman'' in accordance with the terms prescribed on Form MCS 63, entering the name of his/her shop or garage and the date and time the required repairs were completed. If the driver completes the required repairs, he/she shall sign and complete the ''Certification of Repairman.''

(d) *Motor carrier's disposition of Form MCS 63.* (1) Motor carriers shall carefully examine Forms MCS 63. Any and all violations or mechanical defects noted thereon shall be corrected. To the extent drivers are shown not to be in compliance with the Federal Motor Carrier Safety Regulations, appropriate corrective action shall be taken by the motor carrier.

(2) Motor carriers shall complete the ''Motor Carrier Certification of Action Taken'' on Form MCS 63 in accordance with the terms prescribed thereon. Motor carriers shall return Forms MCS 63 to the address indicated upon Form MCS 63 within fifteen (15) days following the date of the vehicle inspection.

[33 FR 19765, Dec. 25, 1968, as amended at 40 FR 44557, Sept. 29, 1975]

PART 399—EMPLOYEE SAFETY AND HEALTH STANDARDS

Subparts A–K [Reserved]

Subpart L—Step, Handhold, and Deck Requirements for Commercial Motor Vehicles

Sec.

399.201 Purpose and scope.
399.203 Applicability.
399.205 Definitions.
399.207 Truck and truck-tractor access requirements.
399.209 Test procedures.
399.211 Maintenance.

AUTHORITY: 49 U.S.C. 304, 1655; 49 CFR 1.48 and 301.60.

SOURCE: 44 FR 43732, July 26, 1979, unless otherwise noted.

Subparts A–K [Reserved]

Subpart L—Step, Handhold, and Deck Requirements for Commercial Motor Vehicles

§ 399.201 Purpose and scope.

This subpart prescribes step, handhold, and deck requirements on commercial motor vehicles. These requirements are intended to enhance the safety of motor carrier employees.

§ 399.203 Applicability.

This subpart applies to all trucks and truck-tractors, having a high profile cab-over-engine (COE) configuration, for entrance, egress and back of cab access, manufactured on and after September 1, 1982.

[44 FR 43732, July 26, 1979, as amended at 46 FR 56799, Nov. 19, 1981]

§ 399.205 Definitions.

Cab-over-engine (COE) A truck or truck-tractor having all, or the front portion, of the engine under the cab.

COE—High profile A COE having the door sill step above the height of the front tires.

Deck plate A horizontal surface designed to provide a person with stable footing for the performance of work such as the connection and disconnection of air and electrical lines, gaining access to permanently-mounted equipment or machinery or for similar needs.

Door sill step Any step normally protected from the elements by the cab door when closed.

Effective peripheral grip Any shaped surface, free of sharp edges, in which a full grasp can be made to secure a handhold by a person.

Fingertip grasp A handhold surface which provides a person contact restricted to finger segments 1 and/or 2 only; or which limits wrap-around closure of finger segment 1 with the palm of the hand to 90 degrees as shown in Illustration I.

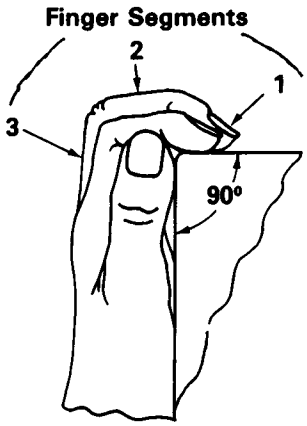

Illustration I
Fingertip Grasp

Full grasp A handhold surface which provides a person contact with finger segments 2 and 3 and which provides space for finger segment 1 to wrap around toward the palm of the hand beyond the 90-degree surface restriction shown in Illustration I. The handhold need not require contact between fingers and thumb. For example, the hand position shown in Illustration II qualifies as full grasp.

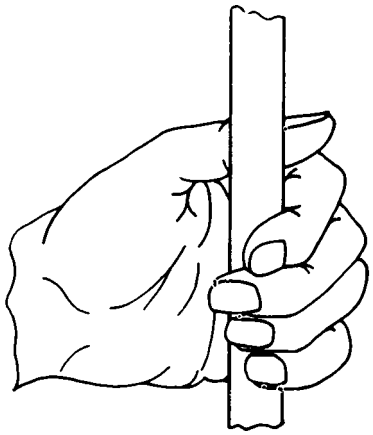

Illustration II
Full Grasp

Ground The flat horizontal surface on which the tires of a motor vehicle rest.

Handhold That which qualifies as providing full grasp if a person is able

to find a hand position on the handhold which allows more than fingertip grasp.

Handprint The surface area contacted by the hand when grasping a handhold. The size of this area is the width of the hand across the metacarpal and half the circumference of the handhold. The hand breadth of the typical person is 88.9 millimeters (3.5 inches).

Person Any individual within the 5th percentile female adult through the 95th percentile male adult of anthropometric measures as described by the 1962 Health Examination Survey, ''Weight, Height and Selected Body Dimensions of Adults, United States 1960–1962'' which is incorporated by reference. It is Public Health Service publication No. 1000–Series 11–No. 8 and is for sale from the U.S. Department of Commerce, National Technical Information Service, 5285 Port Royal Road, Springfield, Virginia 22161. When ordering use NTIS Accession No. PB 267174. It is also available for inspection at the Office of the Federal Register Library, 800 North Capitol Street, NW, suite 700, Washington, DC 20408. This incorporation by reference was approved by the Director of the Federal Register on July 17, 1979. These materials are incorporated as they exist on the date of the approval and a notice of any change in these materials will be published in the FEDERAL REGISTER.

Slip resistant material Any material designed to minimize the accumulation of grease, ice, mud or other debris and afford protection from accidental slipping.

§ 399.207 Truck and truck-tractor access requirements.

(a) *General rule.* Any person entering or exiting the cab or accessing the rear portion of a high profile COE truck or truck-tractor shall be afforded sufficient steps and handholds, and/or deck plates to allow the user to have at least 3 limbs in contact with the truck or truck-tractor at any time. This rule applies to intermediate positions as well as transition between intermediate positions. To allow for changes in climbing sequence, the step design shall include, as a minimum, one intermediate step of sufficient size to accommodate two feet. *Exception.* If air and electrical connections necessary to couple or uncouple a truck-tractor from a trailer are accessible from the ground, no step, handholds or deck plates are required to permit access to the rear of the cab.

(b) *Performance requirements.* All high profile COE trucks or truck-tractors shall be equipped on each side of the vehicle where a seat is located, with a sufficient number of steps and handholds to conform with the requirements of paragraph (a) of this section and shall meet the performance requirements:

(1) *Vertical height.* All measurements of vertical height shall be made from ground level with the vehicle at unladen weight.

(2) *Distance between steps.* The distance between steps, up to and including the door sill step, shall provide any person a stable resting position which can be sustained without body motion and by exerting no more arm force than 35 percent of the person's body weight per grasp during all stages of entry and exit. This criterion applies to intermediate positions as well as transition between intermediate positions above ground level.

(i) When the ground provides the person foot support during entry or is the final step in the sequence during exit, and the step is 508 millimeters (20 inches) or more above ground, the stable resting position shall be achievable by the person using both hands to grasp the handhold(s) and requiring no more arm force than 35 percent of body weight per grasp.

(ii) The vertical height of the first step shall be no more than 609 millimeters (24 inches) from ground level.

(3) *Construction.* Each step or deck plate shall be of a slip resistant design which minimizes the accumulation of foreign material. Wherever practicable, a self-cleaning material should be used.

(4) *Foot accommodation.* Step depth or clearance and step width necessary to accommodate a climbing person are defined by using a minimum 127 millimeter (5 inch) diameter disc as shown in Illustration III.

(i) *Single foot accommodation.* The disc shall fit on a tread rung, or in a step recess, with no exterior overhang.

(ii) *Two-foot accommodation.* Two discs shall fit on a tread rung, or in a step recess, with no exterior overhang.

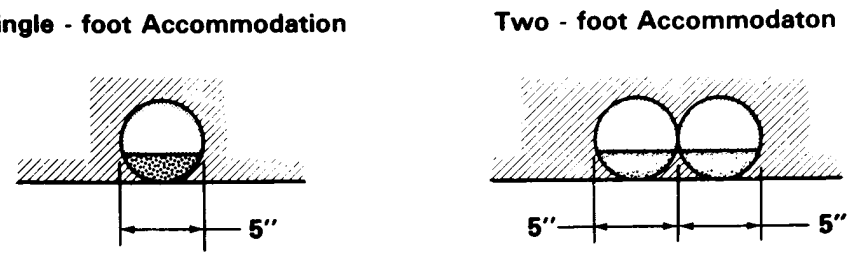

Illustration III
Foot Accommodation

NOTE: The 127 millimeter (5 inch) disc is only intended to test for a minimum depth and width requirement. The step need not retain the disc at rest.

(5) *Step strength.* Each step must withstand a vertical static load of at least 204 kilograms (450 pounds) uniformly distributed over any 127 millimeter (5 inch) increment of step width.

(6) *Handhold location.* A handhold must be located within the reach of any person entering or exiting the vehicle.

(7) *Exterior mounting specifications for handholds.* Each handhold, affixed to the exterior of the vehicle, shall have at least 38 millimeters (1.5 inches) clearance between the handhold and the surface to which it is mounted for the distance between its mounting points.

(8) *Handhold size and shape.* Each handhold shall be free of sharp edges (minimum 1 millimeter [0.04 inch] radius) and have an effective peripheral grip length that permits full grasp by any person.

(9) *Handhold strength.* Each handhold shall withstand a horizontal static load of at least 114 kilograms (250 pounds) uniformly distributed over the area of a hand print and applied away from the mounting surface.

(10) *Deck plates.* Deck plates shall be on the rear of a truck-tractor as necessary to couple or uncouple air and/or electrical connections.

(11) *Deck plate strength.* Each deck plate shall be capable of withstanding the vertical static load of at least 205 kilograms (450 pounds) uniformly distributed over a 127 millimeter (5 inch) diameter disc.

§ 399.209 Test procedures.

(a) The force exerted on a handhold will be measured using a handheld spring scale or force transducer which can be attached to the vehicle and is free to rotate into alignment with a person's hand position.

(b) Hand grasp will be evaluated by observing the handgrip of any individual who conforms with the definition of ''person'' appearing in § 399.205 of this subpart.

§ 399.211 Maintenance.

All steps, handholds, and/or deck plates required by this subpart shall be adequately maintained to serve their intended function.

APPENDIX A TO SUBCHAPTER B
[RESERVED]

APPENDIX B TO SUBCHAPTER B—SPECIAL AGENTS

CAUTIONARY NOTE: This appendix relates only to Federal authority to enforce the regulations in this subchapter. In its present

form, it has no application for the States and is not to be included in any adoption of these regulations by State authorities as a condition of eligibility for grants under part 350 of this chapter.

1. *Authority.* Persons appointed as special agents of the Federal Highway Administration (''Administration''), are authorized to enter upon, to inspect, and to examine any and all lands, buildings, and equipment of motor carriers and other persons subject to the Interstate Commerce Act, the Department of Transportation Act, and other related Acts, and to inspect and copy any and all accounts, books, records, memoranda, correspondence, and other documents of such carriers and other persons.

2. *Compliance.* Motor carriers and other persons subject to these Acts shall submit their accounts, books, records, memoranda, correspondence, and other documents for inspection and copying, and they shall submit their lands, buildings, and equipment for examination and inspection, to any special agent of the Administration upon demand and display of an Administration credential identifying him/her as a special agent.

3. *Definition of special agent.* Federal Highway Administration (FHWA) employees charged with enforcing 42 U.S.C. 4917 and 49 U.S.C. 104, 501 et seq., 521 et seq., 5101 et seq., 5901 et seq., 31101–31104, 31108, 31131 et seq., 31161, 31301 et seq., and 31501 *et seq.*, including employees within the Office of Motor Carriers and such other persons as the Federal Highway Administrator or the Associate Administrator for Motor Carriers may specify in writing, in possession of credentials issued by the FHWA, are special agents. They are hereby authorized to inspect and copy records and to inspect and examine lands, buildings, and equipment to the manner and extent provided by law.

4. *Facsimile of the Administration Credential:*

UNITED STATES OF AMERICA

DEPARTMENT OF TRANSPORTATION FEDERAL HIGHWAY ADMINISTRATION

This is to certify that _____ whose photograph and signature appear hereon is duly accredited as _____ with authority to enter upon, to inspect, and examine lands, buildings, and equipment, and to inspect and copy records and papers of carriers and other persons, in performance of his/her duties under the Department of Transportation Act, related acts, and regulations of the Department.

By direction of the Secretary

(Certifying Authority) (Bearer)

(Sec. 204, Interstate Commerce Act (49 U.S.C. 304); sec. 6, Department of Transportation Act (49 U.S.C. 1655); 49 U.S.C. 1801 et seq.; 18 U.S.C. 831–835; and the delegations of authority at 49 CFR 1.48 and 301.60; 49 U.S.C. 3102; 49 CFR 1.48(b))

[35 FR 1016, Jan. 24, 1970 as amended at 36 FR 16067, Aug. 19, 1971; 43 FR 20011, May 10, 1978; 44 FR 46425, July 10, 1980; 49 FR 38290, Sept. 28, 1984; 60 FR 38749, July 28, 1995; 61 FR 1843, Jan. 24, 1996]

APPENDIXES C–E TO SUBCHAPTER B [RESERVED]

APPENDIX F TO SUBCHAPTER B—COMMERCIAL ZONES

NOTE.— The text of these definitions is identical to the text of 49 CFR part 372, subpart B, revised as of October 1, 1975, which is no longer in print.

COMMERCIAL ZONES

Sec.
1 New York, N.Y.
2 Chicago, Ill.
3 St. Louis, Mo.-East St. Louis, Ill.
4 Washington, D.C.
5 Los Angeles, Calif., and contiguous and adjacent municipalities.
6 Philadelphia, Pa.
7 Cincinnati, Ohio
8 Kansas City, Mo.-Kansas City, Kans.
9 Boston, Mass.
10 Davenport, Iowa; Rock Island and Moline, Ill.
11 Commercial zones of municipalities in New Jersey within 5 miles of New York, N.Y.
12 Commercial zones of municipalities in Westchester and Nassau Counties, N.Y.
13 Tucson, Ariz.
14 Albuquerque, N. Mex.
18 Ravenswood, W. Va.
19 Lake Charles, La.
20 Syracuse, N.Y.
21 Baltimore, Md.
22 Cleveland, Ohio.
23 Detroit, Mich.
24 Seattle, Wash.
25 Albany, N.Y.
26 Minneapolis-St. Paul, Minn.
27 New Orleans, La.
28 Pittsburgh, Pa.
29 Portland, Oreg.
30 Vancouver, Wash.
31 Charleston, S.C.
32 Charleston, W. Va.
33 Memphis, Tenn.
34 Houston, Tex.
35 Pueblo, Colo.
36 Warren, Ohio
37 Louisville, Ky.
38 Sioux City, Iowa.
39 Beaumont, Tex.
40 Metropolitan Government of Nashville and Davidson County, Tenn.
41 Consolidated City of Indianapolis, Ind.
42 Lexington-Fayette Urban County, Ky.

43 Definitions.
44 Commercial zones determined generally, with exceptions.
45 Controlling distances and population data.

Section 1 *New York, N.Y.*

(a) The application of §372.241 Commercial Zones determined generally, with exceptions, is hereby extended to New York, N.Y.

(b) The exemption provided by section 203(b)(8) of the Interstate Commerce Act, of transportation by motor vehicle, in interstate or foreign commerce, performed wholly within the zone the limits of which are defined in paragraph (a) of this section, is hereby removed as to all such transportation except:

(1) Transportation which is performed wholly within the following territory: The area within the corporate limits of the cities of New York, Yonkers, Mount Vernon, North Pelham, Pelham, Pelham Manor, Great Neck Estates, Floral Park, and Valley Stream, N.Y., and Englewood, N.J.; the area within the borough limits of Alpine, Tenafly, Englewood Cliffs, Leonia, Fort Lee, Edgewater, Cliffside Park, Fairview, Palisades Park, and Ridgefield, Bergen County, N.J.; and that part of Hudson County, N.J., east of Newark Bay and the Hackensack River;

(2) Transportation which is performed in respect of a shipment which has had a prior, or will have a subsequent movement by water carrier, and which is performed wholly between points named in subparagraph (1) of this paragraph, on the one hand, and, on the other, those points in Newark and Elizabeth, N.J., identified as follows: All points in that area within the corporate limits of the cities of Newark and Elizabeth, N.J., west of Newark Bay and bounded on the south by the main line of the Central Railroad of New Jersey, on the west by the Newark & Elizabeth Branch of the Central Railroad Company of New Jersey, and on the north by the property line of the Penn Central Transportation Company.

(3) Transportation which is performed in respect of a shipment by rail carrier, and which is performed wholly between points named in subparagraph (1) of this paragraph, on the one hand, and, on the other,

(a) Those portions of Kearny, N.J., within an area bounded on the north by the main line of the Jersey City Branch of the Penn Central Transportation Co., on the south and east by Fish House Road and Pennsylvania Avenue, and on the west by the property line of the Penn Central Transportation Co. Truck-Train Terminal.

(b)(i) That portion of Newark, N.J., within an area bounded on the north by South Street and Delancey Street, on the east by Doremus Avenue, on the south by the freight right-of-way of the Penn Central Transportation Co. (Waverly Yard, Newark, N.J., to Greenville Piers, Jersey City, N.J., line), and on the west by the Penn Central Transportation Co.'s Hunter Street produce yard, and (ii) that portion of Newark, N.J., within an area bounded on the north by Poinier Street, on the east by Broad Steet, on the south by the passenger right-of-way of the Penn Central Transportation Co.'s main line and on the west by Frelinghuysen Avenue.

(c) That portion of Port Reading, N.J., within an area bounded on the east by the Arthur Kill, on the south by the right-of-way of the Reading Co., on the west by Cliff Road, and on the north by Woodbridge-Carteret Road, and

(d) That portion of Elizabeth, N.J., within an area bounded by a line extending from Newark Bay westward along Trumbull Street to its intersection with Division Street; thence northward along Trumbull Street to its intersection with East North Avenue; thence eastward along East North Avenue to its intersection with the New Jersey Turnpike, thence along the New Jersey Turnpike to the Elizabeth Channel; thence easterly along the Elizabeth Channel to Newark Bay; thence along the western shore of Newark Bay to the point of beginning.

Sec. 2 *Chicago, Ill.*

The zone adjacent to and commercially a part of Chicago, Ill., within which transportation by motor vehicle, in interstate or foreign commerce, not under a common control, management, or arrangement for a continuous carriage or shipment to or from a point beyond the zone is partially exempt from regulation under section 203(b)(8) of the Interstate Commerce Act (49 U.S.C. 303(b)(8)), includes and is comprised of all points as follows:

The area within the corporate limits of Chicago, Evanston, Oak Park, Cicero, Berwyn, River Forest, Willow Springs, Bridgeview, Hickory Hills, Worth, Homewood, and Lansing, Ill.; the area within the township limits of Niles, Maine, Leyden, Norwood Park, Proviso, Lyons, Riverside, Stickeny, Worth, Calumet, Bremen, and Thornton Townships, Cook County, Ill.; the area comprised of that part of Lemont Township, Cook County, and that part of Downers Grove Township, Du Page County, Ill., bounded by a line beginning at the intersection of Archer Avenue and the southern corporate limits of Willow Springs, Ill., and extending in a southwesterly direction along Archer Avenue to its junction with Chicago Joliet Road (Sag Lemont Highway), thence in a westerly direction over Chicago Joliet Road to its junction with Walker Road, thence directly north along an imaginary line to the southern shoreline of the Chicago Sanitary and Ship Canal, thence in a northeasterly direction along said shoreline to the corporate limits of Willow Springs, including

points on the indicated portions of the highways specified; the area within Burr Ridge, Du Page County, bounded by a line beginning at the intersection of County Line Road and Frontage Road, thence southwesterly along Frontage Road to its intersection with Garfield Street, thence northerly along Garfield Street to its junction with 74th Street, thence westerly along an imaginary line to the junction of 74th Street and Grant Street, thence southerly along Grant Street to its junction with 75th Street, thence westerly along 75th Street to its junction with Brush Hill Road, thence southerly along Brush Hill Road to its junction with Frontage Road, thence northeasterly along Frontage Road to its junction with County Line Road; and the area within the corporate limits of Hammond, Whiting, East Chicago, and Gary, Ind.

Sec. 3 *St. Louis, Mo.-East St. Louis, Ill.*

(a) The zone adjacent to and commercially a part of St. Louis, Mo.-East St. Louis, Ill, within which transportation by motor vehicle in interstate or foreign commerce, not under a common control, management or arrangement for a continuous carriage to or from a point beyond the zone is partially exempt from regulation under section 203(b)(8) of the Interstate Commerce Act (49 U.S.C. 303(b)(8)), includes and is comprised of all points as follows: (1) All points within the corporate limits of St. Louis, Mo.; (2) all points in St. Louis County, Mo., within a line drawn 0.5 mile south, west, and north of the following line:—Beginning at the Jefferson Barracks Bridge across the Mississippi River and extending westerly along Missouri Highway 77 to its junction with U.S. Highway 61 Bypass, thence along U.S. Highway 61 Bypass to its junction with U.S. Highway 66, thence westerly along U.S. Highway 66 to its junction with Bowles Avenue, thence northerly along Bowles Avenue, actual or projected, to the Meramec River, thence easterly along the south bank of the Meramec River to a point directly south of the western boundary of Kirkwood, thence across the Meramec River to and along the western boundary of Kirkwood to Marshall Road, thence westerly along Marshall Road to its junction with Treecourt Avenue, thence northerly along Treecourt Avenue to its junction with Big Bend Road, thence easterly along Big Bend Road to the western boundry of Kirkwood, thence northerly along the western boundary of Kirkwood to its junction with Dougherty Ferry Road, thence westerly along Dougherty Ferry Road to its junction with Interstate Highway 244, thence northerly along Interstate Highway 244 to its junction with Manchester Road, thence easterly along Manchester Road to its junction with the northwest corner of Kirkwood, thence along the western and northern boundaries of Kirkwood to the western boundary of Huntleigh, Mo., thence along the western and northern boundaries of Huntleigh to its junction with Lindbergh Boulevard, thence northerly along Lindbergh Boulevard to its junction with Lackland Avenue, thence in a westerly direction along Lackland Avenue to its junction with the right-of-way of the proposed Circumferential Expressway (Interstate Highway 244), thence in a northerly direction along said right-of-way to its junction with the right-of-way of the Chicago, Rock Island and Pacific Railroad, thence in an easterly direction along said right-of-way to its junction with Dorsett Road, thence in an easterly direction along Dorsett Road to its junction with Lindbergh Boulevard, thence in a northerly direction along Lindbergh Boulevard to its junction with St. Charles Rock Road, thence westerly along St. Charles Rock Road to its function with the Missouri River, thence northerly along the east shore of the Missouri River to its junction with the Norfolk and Western Railway Co. right-of-way, thence easterly along the southern boundary of the Norfolk and Western Railway Co. right-of-way to Lindbergh Boulevard, thence in an easterly direction along Lindbergh Boulevard to the western boundary of St. Ferdinand (Florissant), Mo., thence along the western, northern, and eastern boundaries of St. Ferdinand to junction Insterstate Highway 270, and thence along Interstate Highway 270 to the corporate limits of St. Louis (near Chain of Rocks Bridge); and (3) all points within the corporate limits of East St. Louis, Belleville, Granite City, Madison, Venice, Brooklyn, National City, Fairmont City, Washington Park, and Sauget, Ill.; that part of the village of Cahokia, Ill., bounded by Illinois Highway 3 on the east, First Avenue and Red House (Cargill) Road on the south and southwest, the east line of the right-of-way of the Alton and Southern Railroad on the west, and the corporate limits of Sauget, Ill., on the northwest and north; that part of Centerville, Ill., bounded by a line beginning at the junction of 26th Street and the corporate limit of East St. Louis, Ill., and extending northeasterly along 26th Street to its junction with Bond Avenue, thence southeasterly along Bond Avenue to its junction with Owen Street, thence southwesterly along Owen Street to its junction with Church Road, thence southeasterly along Church Road to its junction with Illinois Avenue, thence southwesterly along Illinois Avenue to the southwesterly side of the right-of-way of the Illinois Central Railroad Co., thence along the southwesterly side of the right-of-way of the Illinois Central Railroad Co. to the corporate limits of East St. Louis, Ill, thence along the corporate limits of East St. Louis, Ill., to the point of beginning; and that area bounded by a line commencing at the intersection of the right-of-way of the Alton and Southern Railroad and

the Madison, Ill., corporate limits near 19th Street, and extending east and south along said right-of-way to its intersection with the right-of-way of Illinois Terminal Railroad Co., thence southwesterly along the Illinois Terminal Railroad Co. right-of-way to its intersection with Illinois Highway 203, thence northwesterly along said highway to its intersection with the Madison, Ill., corporate boundary near McCambridge Avenue, thence northerly along the Madison, Ill., corporate boundary to the point of beginning.

(b) The exemption provided by section 203(b)(8) of the Interstate Commerce Act in respect of transportation by motor vehicle, in interstate or foreign commerce, between Belleville, Ill., on the one hand, and, on the other, any other point in the commercial zone, the limits of which are defined in paragraph (a) of this section, is hereby removed, and the said transportation is hereby subjected to all applicable provisions of the Interstate Commerce Act.

Sec. 4 *Washington, DC.*

The zone adjacent to and commercially a part of Washington, DC, within which transportation by motor vehicle, in interstate or foreign commerce, not under a common control, management, or arrangement for a continuous carriage to or from a point beyond the zone is partially exempt from regulation under section 203(b)(8) of the Interstate Commerce Act (49 U.S.A. 303(b)(8)) includes and it is comprised of all as follows:

Beginning at the intersection of MacArthur Boulevard and Falls Road (Maryland Highway 189) and extending northeasterly along Falls Road to its junction with Scott Drive, thence west on Scott Drive to its junction with Viers Drive, thence west on Viers Drive to its junction with Glen Mill Road, thence northeast on Glen Mill Road to its junction with Maryland Highway 28, thence west on Maryland Highway 28 to its junction with Shady Grove Road, thence northeast on Shady Grove Road approximately 2.7 miles to Crabbs Branch, thence southeasterly along the course of Crabbs Branch to Rock Creek, thence southerly along the course of Rock Creek to Viers Mill Road (Maryland Highway 586), thence southeasterly along Viers Mill Road approximately 0.3 mile to its junction with Aspen Hill Road, thence northeasterly along Aspen Hill Road to its junction with Brookeville Road (Maryland Highway 97), thence southeasterly along Brookeville Road to its junction with Maryland Highway 183, thence northeasterly along Maryland Highway 183 to Colesville, Md., thence southeasterly along Beltsville Road to its junction with Powder Mill Road (Maryland Highway 212), thence easterly over Powder Mill Road to its junction with Montgomery Road, thence northeasterly along Montgomery Road, approximately 0.2 mile, to its junction with an unnumbered highway extending northeasterly to the north of Ammendale Normal Institute, thence along such unnumbered highway for a distance of about 2.2 miles to its junction somewhat north of Virginia Manor, Md., with an unnumbered highway extending easterly through Muirkirk, Md., thence along such unnumbered highway through Muirkirk to its junction, approximately 1.8 miles east of the Baltimore and Ohio Railroad, with an unnumbered highway, thence southwesterly along such unnumbered highway for a distance of about 0.5 mile to its junction with an unnumbered highway, thence southeasterly along such unnumbered highway through Springfield and Hillmeade, Md., to its junction with Defense Highway (U.S. Highway 50), thence southwesterly along Defense Highway approximately 0.8 mile to its junction with Enterprise Road (Maryland Highway 556), thence southerly over Enterprise Road to its junction with Central Avenue (Maryland Highway 214), thence westerly over Central Avenue about 0.5 mile to its crossing of Western Branch, thence southerly down the course of Western Branch to Maryland Highway 202, thence westerly approximately 0.3 mile along Maryland Highway 202 to its junction with White House Road, thence southwesterly along White House Road to its junction with Maryland Highway 221, thence southeasterly along Maryland Highway 221 to its junction with Maryland Highway 4, thence westerly along Maryland Highway 4 to the boundary of Andrews Air Force Base, thence south and west along said boundary to Brandywine Road (Maryland Highway 5), thence northwesterly along Maryland Highway 5 to its junction with Maryland Highway 337, thence southwesterly along Maryland Highway 337 to its junction with Maryland Highway 224, thence southerly along Maryland Highway 224 to a point opposite the mouth of Broad Creek, thence due west across the Potomac River to the west bank thereof, thence southerly along the west bank of the Potomac River to Gunston Cove, thence up the course of Gunston Cove to Pohick Creek, thence up the course of Pohick Creek to Virginia Highway 611, thence southwesterly along Virginia Highway 611 to the Fairfax-Prince William County line, thence along said county line to Virginia Highway 123, thence northerly along Virginia Highway 123 to its junction with Virginia Highway 636, thence northeasterly along Virginia Highway 636 to its junction with Virginia Highway 638, thence northwesterly along Virginia Highway 638 to its junction with Virginia Highway 620, thence westerly along Virginia Highway 620 to its junction with Virginia Highway 655, thence northeasterly along Virginia Highway 655 to its junction with U.S. Highway 211, thence westerly along U.S. Highway 211 to its junction with Virginia

Highway 608, thence northerly along Virginia Highway 608 to its junction with U.S. Highway 50, thence westerly along U.S. Highway 50 to the Fairfax-Loudoun County line, thence northeasterly along said county line to its intersection with Dulles International Airport, thence along the southern, western, and northern boundaries of said airport to the Fairfax-Loudoun County line (at or near Dulles Airport Access Road), thence northeasterly along said county line to its junction with Virginia Highway 7, thence southeasterly along Virginia Highway 7 to its junction with Virginia Highway 193, thence along Virginia Highway 193 to its junction with Scott Run Creek, thence northerly down the course of Scott Run Creek to the Potomac River, thence due north across the river to MacArthur Boulevard to its junction with Maryland Highway 189, the point of beginning.

Sec. 5 *Los Angeles, Calif., and contiguous and adjacent municipalities.*

(a) The exemption provided by section 203(b)(8) of Part II of the Interstate Commerce Act to the extent it affects transportation by motor vehicle, in interstate or foreign commerce, performed wholly within Los Angeles, Calif., or wholly within any municipalitiy contiguous or adjacent to Los Angeles, Calif., or wholly a part of Los Angeles, as defined in paragraph (b) of this section, or wholly within the zone adjacent to and commercially a part of the San Pedro, Wilmington, and Terminal Island Districts of Los Angeles and Long Beach, as defined in paragraph (c) of this section, or wholly within the zone of any independent municipality contiguous or adjacent to Los Angeles, as determined under §372.241, or otherwise, between any point in Los Angeles County, Calif., north of the line described below, on the one hand, and, on the other, any point in Los Angeles County, Calif., south thereof is hereby removed and the said transportation is hereby subjected to all the applicable provisions of the Interstate Commerce Act:

Beginning at the Pacific Ocean, and extending easterly along the northern and eastern corporate limits of Manhattan Beach to the northern corporate limits of Redondo Beach, thence along the northern and eastern corporate limits of Redondo Beach to the intersection of Inglewood Avenue and Redondo Beach Boulevard, thence along Redondo Beach Boulevard to the corporate limits of Torrance, thence along the northwestern and eastern corporate limits of Torrance to 182d Street, thence along 182d Street, Walnut, and Main Streets to Alondra Boulevard, thence along Alondra Boulevard to its intersection with Dwight Avenue, thence southerly along Dwight Avenue and an imaginary straight line extending southward to Greenleaf Boulevard, thence eastward along Greenleaf Boulevard to the northwestern corner of the corporate limits of Long Beach, thence along the northern and eastern corporate limits of Long Beach to Artesia Boulevard, thence east on Artesia Boulevard to the Los Angeles-Orange County line.

(b) For the purpose of administration and enforcement of Part II of the Interstate Commerce Act, the zone adjacent to and commercially a part of Los Angeles and contiguous municipalities (except the San Pedro, Wilmington, and Terminal Island districts of Los Angeles and Long Beach, Calif.), in which transportation by motor vehicle in interstate or foreign commerce, not under a common control, management, or arrangement for a continuous carriage or shipment to or from a point beyond the zone, will be partially exempt from regulation under section 203(b)(8) of the act, is hereby defined to include the area of a line extending in a generally northwesterly and northerly direction from the intersection of Inglewood Avenue and Redondo Beach Boulevard along the eastern and northern corporate limits of Redondo Beach, Calif., to the eastern corporate limits of Manhattan Beach, Calif., thence along the eastern and northern corporate limits of Manhattan Beach to the Pacific Ocean, thence along the shoreline of the Pacific Ocean to the western corporate limits of Los Angeles at a point east of Topanga Canyon, and thence along the western corporate limits of Los Angeles to a point near Santa Susana Pass; south of a line extending in a generally easterly direction from a point near Santa Susana Pass along the northern corporate limits of Los Angeles to the eastern corporate limits of Burbank, Calif., thence along the eastern corporate limits of Burbank to the northern corporate limits of Glendale, Calif., and thence along the northern corporate limits of Glendale and Pasadena, Calif., to the northeastern corner of Pasadena; west of a line extending in a generally southerly and southwesterly direction from the northeastern corner of Pasadena along the eastern and a portion of the southern corporate limits of Pasadena to the eastern corporate limits of San Marino, Calif., thence along the eastern corporate limits of San Marino and the eastern and a portion of the southern corporate limits of Alhambra, Calif., to the western corporate limits of Monterey Park, Calif., and the western corporate limits of Montebello, Calif., thence along the western corporate limits of Montebello, Calif., to the Rio Hondo, and the Los Angeles River to the northern corporate limits of Long Beach; and north of a line extending in a generally westerly direction from the Los Angeles River along the northern corporate limits of Long Beach and thence along Greenleaf Boulevard to its intersection with an imaginary straight line extending southward from Dwight Avenue, thence north on the imaginary straight line

extending southward from Dwight Avenue, and thence northerly along Dwight Avenue to Alondra Boulevard, thence west along Alondra Boulevard, Main, Walnut, and 182d Streets to the eastern corporate limits of Torrance, thence along a portion of the eastern and the northwestern corporate limits of Torrance to Redondo Beach Boulevard, and thence along Redondo Beach Boulevard to Inglewood Avenue.

(c) For the purpose of administration and enforcement of Part II of the Interstate Commerce Act, the zone adjacent to and commercially a part of the San Pedro, Wilmington, and Terminal Island districts of Los Angeles and Long Beach in which transportation by motor vehicle in interstate or foreign commerce, not under a common control, management, or arrangement for a continuous carriage or shipment to or from a point beyond the zone, will be partially exempt from regulation under section 203(b)(8) of the act, is hereby defined to include the area east of a line extending in a generally northerly and northwesterly direction from the Pacific Ocean along the western corporate limits of Los Angeles to 258th Street, thence along 258th Street to the eastern corporate limits of Torrance, and thence along a portion of the eastern, and along the southern and western, corporate limits of Torrance to the northwestern corner of Torrance, south of a line extending in a generally easterly direction from the northwestern corner of Torrance along the northwestern and a portion of the eastern corporate limits of Torrance to 182d Street, thence along 182d, Walnut, Main, and Alondra Boulevard to its intersection with Dwight Avenue, thence southerly along Dwight Avenue and an imaginary straight line extending southward from Dwight Avenue to Greenleaf Boulevard and thence along Greenleaf Boulevard and the northern corporate limits of Long Beach to the northeastern corner of Long Beach; west of the eastern corporate limits of Long Beach; and north of the southern corporate limits of Long Beach and Los Angeles.

Sec. 6 *Philadelphia, Pa.*

The zone adjacent to and commercially a part of Philadelphia, Pa., within which transportation by motor vehicle, in interstate or foreign commerce, not under a common control, management, or arrangement for a continuous carriage or shipment to or from a point beyond such zone, is partially exempt from regulation under section 203(b)(8) of the Interstate Commerce Act (49 U.S.C. 303(b)(8)) includes and is comprised of all points as follows:

(a) The area within Pennsylvania included within the corporate limits of Philadelphia and Bensalem and Lower Southampton Townships in Bucks County; Conshohocken and West Conshohocken, Pa., and Lower Moreland, Abington, Cheltenham, Springfield, Whitemarsh, and Lower Merion Townships in Montgomery County; an area in Upper Dublin Township, Montgomery County, bounded by a line beginning at the intersection of Pennsylvania Avenue and Fort Washington Avenue and extending northeast along Fort Washington Avenue to its junction with Susquehanna Road, thence southeast along Susquehanna Road to its junction with the right-of-way of the Pennsylvania Railroad Company, thence southwest along the right-of-way of the Pennsylvania Railroad Company to Pennsylvania Avenue, thence northwest along Pennsylvania Avenue to its junction with Fort Washington Avenue, the point of beginning; Haverford Township in Delaware County; and an area in Delaware County south and east of a line extending southward from the intersection of the western and northern boundaries of Upper Darby Township along Darby Creek to Bishop Avenue, thence south along Bishop Avenue to Baltimore Pike, thence west along Baltimore Pike to Pennsylvania Highway 320, thence south along Pennsylvania Highway 320 to the corporate limits of Chester, thence along the northern corporate limit of Chester in a westerly direction to the eastern boundary of Upper Chichester Township, thence south to the southern boundary of said township along the eastern boundary thereof, and thence west along the southern boundary of said township to the Delaware State line, and thence south along the Delaware State line to the Delaware River, and

(b) The area in New Jersey included in the corporate limits of Camden, Gloucester City, Woodlynne, Merchantville, and Palmyra Boroughs, and the area included in Pennsauken Township in Camden County.

Sec. 7 *Cincinnati, Ohio.*

The zone adjacent to and commercially a part of Cincinnati, Ohio, within which transportation by motor vehicle, in interstate or foreign commerce, not under a common control, management, or arrangement for a continuing carriage to or from a point beyond the zone is partially exempt from regulation under section 203(b)(8) of the Interstate Commerce Act (49 U.S.C. 203(b)(8)), includes and is comprised of all points as follows:

Addyston, Ohio.	Mariemont, Ohio.
Cheviot, Ohio.	North Bend, Ohio.
Cincinnati, Ohio.	Norwood, Ohio.
Cleves, Ohio.	St. Bernard, Ohio.
Elmwood Place, Ohio.	Covington, Ky.
	Newport, Ky.
Fairfax, Ohio.	Cold Spring, Ky.

That part of Ohio bounded by a line commencing at the intersection of the Colerain-Springfield Township line and corporate limits of Cincinnati, Ohio, and extending along said township line in a northerly direction to

its intersection with the Butler-Hamilton County line, thence in an easterly direction along said county line to its intersection with Ohio Highway 4, thence in a northerly direction along Ohio Highway 4 to its intersection with Seward Road, thence in a northerly direction along said road to its intersection with Port Union Road, thence east along Port Union Road to the Fairfield Township-Union Township line, thence northward along said township line to its intersection with the right-of-way of the Pennsylvania Railroad Co., thence southeasterly along the right-of-way of the Pennsylvania Railroad Co. to its intersection with Princeton-Glendale Road (Ohio Highway 747), thence southward along said road to its intersection with Mulhauser Road, thence in an easterly direction along said road to the terminus thereof west of the tracks of the Pennsylvania Railroad Co., thence continue in an easterly direction in a straight line to Allen Road, thence along the latter to the junction thereof with Cincinnati-Dayton Road, thence in a southerly direction along Cincinnati-Dayton Road, to the Butler, Hamilton County line, thence along said county line to the Warren-Hamilton County line in an easterly direction to the Symmes-Sycamore Township line, thence in a southerly direction along the Symmes-Sycamore Township line to its intersection with the Columbia Township line, thence in a westerly direction along Sycamore-Columbia Township line to Madeira Township, thence in a clockwise direction around the boundary of Madeira Township to the Sycamore-Columbia Township line, thence in a westerly direction along said township line to Silverton Township, thence in a southerly direction along said corporate limits to junction with Redbank Road, thence in a southerly direction over Redbank Road to the Cincinnati Corporate limits.

That part of Kenton County, Ky., lying on and north of a line commencing at the intersection of the Kenton-Boone County line and Dixie Highway (U.S. Highways 25 and 42), and extending over said highway to the corporate limits of Covington, Ky., including communities on the described line.

That part of Campbell County, Ky., lying on and north of a line commencing at the southern corporate limits of Newport, Ky., and extending along Licking Pike (Kentucky Highway 9) to junction with Johns Hill Road, thence along Johns Hill Road to junction with Alexandria Pike (U.S. Highway 27), thence northward along Alexandria Pike to junction with River Road (Kentucky Highway 445), thence over the latter to the Ohio River, including communities on the described line.

That part of Boone County, Ky., bounded by a line beginning at the Boone-Kenton County line west of Erlanger, Ky., and extending in a northwesterly direction along Donaldson Highway to its intersection with Zig-Zag Road, thence along Zig-Zag Road to its intersection with Kentucky Highway 18, thence along Kentucky Highway 18 to its intersection with Kentucky Highway 237, thence along Kentucky Highway 237 to its intersection with Kentucky Highway 20, and thence easterly along Kentucky Highway 20 to the Boone-Kenton County line.

That part of Boone and Kenton Counties, Ky., bounded by a line commencing at the intersection of the Boone-Kenton County line and U.S. Highway 42, and extending in a southwesterly direction along U.S. Highway 42 to its junction with Gunpowder Road, thence southerly along Gunpowder Road to its junction with Sunnybrook Road, thence easterly along Sunnybrook Road to its junction with Interstate Highway 75, thence in a straight line in a northeasterly direction to Richardson Road, thence in an easterly direction over Richardson Road to its junction with Kentucky State Route 1303, thence in a northerly direction over Kentucky State Route 1303 to the southern boundary of Edgewood, Kenton County, Ky.

Sec. 8 *Kansas City, Mo.-Kansas City, Kans.*

The zone adjacent to and commercially a part of Kansas City, Mo.-Kansas City, Kans., within which transportation by motor vehicle, in interstate or foreign commerce, not under a common control, management, or arrangement for a continuing carriage to or from a point beyond the zone is partially exempt from regulation under section 203(b)(8) of the Interstate Commerce Act (49 U.S.C. 303(b)(8)), includes and is comprised of all points as follows:

Beginning on the north side of the Missouri River at the western boundary line of Parkville, Mo., thence along the western and northern boundaries of Parkville to the Kansas City, Mo., corporate limits, thence along the western, northern, and eastern corporate limits of Kansas City, Mo., to its junction with U.S. Bypass 71 (near Liberty, Mo.), thence along U.S. Bypass 71 to Liberty, thence along the northern and eastern boundaries of Liberty to its junction with U.S. Bypass 71 south of Liberty, thence south along U.S. Bypass 71 to its junction with the Independence, Mo., corporate limits, thence along the eastern Independence, Mo., corporate limits to its junction with Interstate Highway 70, thence along Interstate Highway 70 to its junction with the Blue Springs, Mo., corporate limits, thence along the western, northern, and eastern corporate limits of Blue Springs, Mo., to its junction with U.S. Highway 40, thence east along U.S. Highway 40 to its junction with Brizen-Dine Road, thence south along the southerly extension of Brizen-Dine Road to its junction with Missouri Highway AA, thence along

Missouri Highway AA to its junction with the Blue Springs, Mo., corporate limits, thence along the southern and western corporate limits of Blue Springs, Mo., to its junction with U.S. Highway 40, thence west along U.S. Highway 40 to its junction with the Lee's Summit, Mo., corporate limits.

Thence along the eastern Lee's Summit corporate limits to the Jackson-Cass County line, thence west along Jackson-Cass County line to the eastern corporate limits of Belton, Mo., thence along the eastern, southern, and western corporate limits of Belton to the western boundary of Richards-Gebaur Air Force Base, thence along the western boundary of said Air Force Base to Missouri Highway 150, thence west along Missouri Highway 150 to the Kansas-Missouri State line, thence north along the Kansas-Missouri State line, to 110th Street, thence west along 110th Street to its junction with U.S. Highway 69, thence north along U.S. Highway 69 to its junction with 103d Street, thence west along 103d Street to its junction with Quivera Road (the corporate boundary of Lenexa, Kans.), thence along the eastern and southern boundaries of Lenexa to Black Bob Road, thence south along Black Bob Road to 119th Street, thence east along 119th Street to the corporate limits of Olathe, Kans., thence south and east along the Olathe corporate limits to Schlagel Road, thence south along Schlagel Road to Olathe Morse Road, thence west along Olathe Morse Road to the northeast corner of Johnson County Airportr, thence south, west, and north along the boundaries of said airport to Pflumm Road, thence north along Pflumm Road to its junction with Olathe Martin City Road, thence west along Olathe Martin City Road to its junction with Murden Road, thence south along Murden Road to its junction with Olathe Morse Road (the corporate boundary of Olathe, Kans.), thence west and north along said corporate boundary to its intersection with U.S. Highway 56, thence southwest along U.S. Highway 56 to its junction with 159th Street.

Thence west along 159th Street to its junction with the Johnson County Industrial Airport, thence south, west, north and east along the boundaries of said airport to the point of beginning, on 159th Street, thence, east along 159th Street to its junction with U.S. Highway 56, thence northeast along U.S. Highway 56 to its junction with Parker Road, thence north along Parker Road to the northern boundary of Olathe, thence east and north along the northern corporate limits of Olathe to Pickering Road, thence north along Pickering Road to 107th Street (the corporate boundary of Lenexa, Kans.), thence along the western and northern boundaries of Lenexa to Pflumm Road, thence north along Pflumm Road to its junction with Kansas Highway 10, thence along Kansas Highway 10 to its junction with Kansas Highway 7, thence along an imaginary line due west across the Kansas River to the Wyandotte County-Leavenworth County line (142d Street) at Loring, Kans., thence westerly along County Route No. 82, a distance of three-fourths of a mile to the entrance of the facilities at Mid-Continent Underground Storage, Loring, thence from Loring in a northerly direction along Loring Lane and Lindwood Avenue to the southern boundary of Bonner Springs, Kans.

Thence along the southern, western, and northern boundaries of Bonner Springs to its intersection with Kansas Highway 7, thence southeast along Kansas Highway 7 to its junction with Kansas Highway 32, thence east on Kansas Highway 32 to the corporate boundary of Kansas City, Kans., thence north, west, and east along the corporate boundaries of Kansas City, Kans., to its junction with Cernech Road and Pomeroy Drive, thence northwesterly along Pomeroy Drive to its junction with 79th Street, thence along 79th Street to its junction with Walcotte Drive at Pomeroy, Kans., thence due west 1.3 miles to its junction with an unnamed road, thence north along such unnamed road to the entrance of Powell Port facility, thence due north to the southern bank of the Missouri River, thence east along the southern bank of Missouri River to a point directly across from the western boundary of Parkville, Mo., thence across the Missouri River to the point of beginning.

Sec. 9 *Boston, Mass.*

For the purpose of administration and enforcement of Part II of the Interstate Commerce Act, the zone adjacent to and commercially a part of Boston, Mass., and contiguous municipalities in which transportation by motor vehicle in interstate or foreign commerce, not under a common control, management, or arrangement for a continuous carriage or shipment to or from a point beyond the zone, will be partially exempt under section 203(b)(8) of the act from regulation, is hereby defined to include the following:

Boston, Mass.	Cambridge, Mass.
Winthrop, Mass.	Watertown, Mass.
Chelsea, Mass.	Brookline, Mass.
Revere, Mass.	Newton, Mass.
Everett, Mass.	Needham, Mass.
Malden, Mass.	Dedham, Mass.
Medford, Mass.	Milton, Mass.
Somerville, Mass.	Quincy, Mass.

Sec. 10 *Davenport, Iowa; Rock Island and Moline, Ill.*

For the purpose of administration and enforcement of Part II of the Interstate Commerce Act, the zones adjacent to and commercially a part of Davenport, Iowa, Rock

Island and Moline, Ill., in which transportation by motor vehicle, in interstate or foreign commerce, not under a common control, management, or arrangement for a continuous carriage or shipment to or from a point beyond such municipalities or zones, will be partially exempt from regulation under section 203(b)(8) of the act (49 U.S.C. 303(b)(8) are hereby determined to be coextensive and to include and to be comprised of the following:

(a) All points within the corporate limits of the city of Davenport and the city of Bettendorf, and in Davenport Township, Iowa.

(b) All points north of Davenport Township within that portion of Sheridan Township, Iowa, bounded by a line as follows: Beginning at the points where U.S. Highway 61 crosses the Davenport-Sheridan Township line and extending northward along U.S. Highway 61 to the right-of-way of the Chicago, Milwaukee, St. Paul & Pacific Railroad Co., thence northwesterly along said right-of-way to its junction with the first east-west unnumbered highway, thence westerly approximately 0.25 mile to its junction with a north-south unnumbered highway, thence southerly along such unnumbered highway to the northeast corner of Mount Joy Airport, thence along the northern and western boundaries of said airport to the southwestern corner thereof, and thence south in a straight line to the northern boundary of Davenport Township.

(c)(1) That part of Iowa lying west of the municipal limits of Davenport south of Iowa Highway 22, north of the Mississippi River and east of the present western boundary of the Dewey Portland Cement Co., at Linwood, including points on such boundaries, and (2) that part of Iowa east of the municipal limits of Bettendorf, south of U.S. Highway 67, west of a private road running between U.S. Highway 67 and Riverside Power Plant of the Iowa-Illinois Gas & Electric Co., and north of the Mississippi River, including points on such boundaries.

(d) The municipalities of Carbon Cliff, Silvis, East Moline, Moline, Rock Island, and Milan, Ill., and that part of Illinois lying south or east of such municipalities, within a line as follows: Beginning at a point where Illinois Highway 84 crosses the southern municipal limits of Carbon Cliff and extending southerly along such highway to its junction with Colona Road, thence westerly along Colona Road to Bowlesburg Road, thence southerly on Bowlesburg Road to the southern boundary of Hampton Township, thence along the southern boundaries of Hampton and South Moline Townships to U.S. Highway 150, thence southerly along U.S. Highway 150 to the southern boundary of the Moline Airport, thence along the southern and western boundaries of the Moline Airport to Illinois Highway 92, and thence along Illinois Highway 92 to the corporate limits of Milan.

(e) All points in Illinois within one-half mile on each side of Rock Island County State Aid Route No. 9 extending southwesterly from the corporate limits of Milan for a distance of 1 mile, including points on such highway.

Sec. 11 *Commercial zones of municipalities in New Jersey within 5 miles of New York, N.Y.*

(a) The application of §372.241 is hereby extended to each municipality in New Jersey, any part of which is within 5 miles of the corporate limits of New York, N.Y.

(b) The exemption provided by section 203(b)(8) of the Interstate Commerce Act, of transportation by motor vehicle, in interstate or foreign commerce, performed wholly within any commercial zone, the limits of which are defined in paragraph (a) of this section, is hereby removed as to all such transportation except (1) transportation which is performed wholly between any two points in New Jersey, or (2) transportation which is performed wholly between points in New Jersey named in §372.201, on the one hand, and, on the other, points in New York named in §372.201.

Sec. 12 *Commercial zones of municipalities in Westchester and Nassau Counties, N.Y.*

(a) The application of §372.241 is hereby extended to each municipality in Westchester or Nassau Counties, N.Y.

(b) The exemption provided by section 203(b)(8) of the Interstate Commerce Act, of transportation by motor vehicle, in interstate or foreign commerce, performed wholly within any commercial zone, the limits of which are defined in paragraph (a) of this section, is hereby removed as to all such transportation except (1) transportation which is performed wholly between points in New York neither of which is New York City, NY, or (2) transportation which is performed wholly between points in Westchester or Nassau County named in §372.201, on the one hand, and, on the other, New York City, N.Y., or points in New Jersey named in §372.201.

Sec. 13 *Tucson, Ariz.*

That zone adjacent to and commercially a part of Tucson, Ariz., within which transportation by motor vehicle, in interstate or foreign commerce, not under a common control, management, or arrangement for a continuous carriage or shipment to or from a point beyond the zone, is partially exempt, under section 203(b)(8) of the Interstate Commerce Act (49 U.S.C. 303(b)(8)) from regulation, includes, and is comprised of, all points as follows:

(a) The municipality of Tucson, Ariz., itself.

(b) All points within a line drawn 5 miles beyond the corporate limits of Tucson, Ariz.

(c) All points in that area south of the line described in paragraph (b) of this section, bounded by a line as follows: Beginning at the point where the line described in paragraph (b) of this section, intersects Wilmot Road, thence south along Wilmot Road to junction Nogales Old Vail Connection, thence west along Nogales Old Vail Connection, actual or extended, to the Santa Cruz River, thence north along the east bank of the Santa Cruz River to its joinder with the line described in paragraph (b) of this section.

(d) All of any municipality any part of which is within the limits of the combined areas defined in paragraphs (b) and (c) of this section.

(e) All of any municipality wholly surrounded, or so surrounded except for a water boundary, by the city of Tucson or by any municipality included under the terms of paragraph (d) of this section.

Sec. 14 *Albuquerque, N. Mex.*

The zone adjacent to and commercially a part of Albuquerque, N. Mex., within which transportation by motor vehicle, in interstate or foreign commerce, not under a common control, management, or arrangement for a continuous carriage or shipment to or from a point beyond the zone, is partially exempt, under section 203(b)(8) of the Interstate Commerce Act (49 U.S.C. 303(b)(8)), from regulation, includes, and is comprised of, all points as follows:

(a) The municipality of Albuqerque, N. Mex., itself.

(b) All points within a line drawn 5 miles beyond the corporate limits of Albuquerque, N. Mex.

(c) All points in that area north of the line described in paragraph (b) of this section, bounded by a line as follows: Beginning at the intersection of the line described in paragraph (b) of this section and New Mexico Highway 528, extending in a northeasterly direction along New Mexico Highway 528 to its intersection with New Mexico Highway 44, thence easterly along New Mexico Highway 44 to its intersection with New Mexico Highway 422, thence southerly along New Mexico Highway 422 to its intersection with the line described in paragraph (b) of this section.

(d) All of any municipality any part of which is within the limits of the combined areas defined in paragraphs (b) and (c) of this section;

(e) All of any municipality wholly surrounded, or so surrounded except for a water boundary, by the city of Albuquerque, N. Mex., or by any municipality included under the terms of paragraph (b) of this section.

Sec. 18 *Ravenswood, W. Va.*

That zone adjacent to and commercially a part of Ravenswood, W. Va., within which transportation by motor vehicle, in interstate or foreign commerce, not under common control, management, or arrangement for a continuous carriage or shipment to or from a point beyond the zone, is partially exempt, under section 203(b)(8) of the Interstate Commerce Act (49 U.S.C. 303(b)(8)), from regulation, includes, and is comprised of, all points as follows:

(a) The municipality of Ravenswood, W. Va., itself.

(b) All points within a line drawn 3 miles beyond the corporate limits of Ravenswood, W. Va., and

(c) All points in West Virginia in that area south and southwest of those described in paragraph (b) of this section, bounded by a line as follows: Beginning at the point where the Ohio River meets the line described in paragraph (b) of this section southwest of Ravenswood, thence southerly along the east bank of the Ohio River to the point where the mouth of the Lick Run River empties into the Ohio River; thence in a northeasterly direction along the northern bank of the Lick Run River to the point where it crosses West Virginia Highway 2 south of Ripley Landing, W. Va.; thence in a northerly direction along West Virginia Highway 2 to its intersection with the line described in paragraph (b) of this section west of Pleasant View, W. Va.

Sec. 19 *Lake Charles, La.*

That zone adjacent to and commercially a part of Lake Charles, La., within which transportation by motor vehicle, in interstate or foreign commerce, not under common control, management, or arrangement for a continuous carriage or shipment to or from a point beyond the zone, is partially exempt, under section 203(b)(8) of the Interstate Commerce Act (49 U.S.C. 303(b)(8)), from regulation, includes, and is comprised of, all points as follows:

(a) The municipality of Lake Charles La., itself;

(b) All points within a line drawn 4 miles beyond the corporate limits of Lake Charles, La.;

(c) All points in that area south and west of the line described in paragraph (b) of this section, bounded by a line, as follows: beginning at the point where the line described in paragraph (b) of this section intersects Louisiana Highway 385; thence south along Louisiana Highway 385 to its intersection with the Calcasieu-Cameron Parish line; thence west along the Calcasieu-Cameron Parish line to its intersection with Louisiana Highway 27; thence northerly along Louisiana Highway 27 to a point thereon 2 miles south of U.S. Highway 90; thence east along a line

parallel to U.S. Highway 90 to Louisiana Highway 108; thence north along Louisiana Highway 108 to junction U.S. Highway 90; thence east along U.S. Highway 90 to the intersection thereof with the line described in paragraph (b) of this section;

(d) All of the municipality any part of which is within the limits of the combined areas in paragraphs (b) and (c) of this section; and

(e) All of any municipality wholly surrounded, or so surrounded except for a water boundary, by the City of Lake Charles or by any municipality included under the terms of paragraph (d) of this section.

Sec. 20 *Syracuse, N.Y.*

The zone adjacent to and commercially a part of Syracuse, N.Y., within which transportation by motor vehicle, in interstate or foreign commerce, not under a common control, management, or arrangement for a continuing carriage to or from a point beyond the zone is partially exempt from regulation under section 203(b)(8) of the Interstate Commerce Act (49 U.S.C. 303(b)(8)), includes and is comprised of all points as follows:

(a) The municipality of Syracuse, NY., itself;

(b) All other municipalities and unincorporated areas within 5 miles of the corporate limits of Syracuse, N.Y., and all of any other municipality any part of which lies within 5 miles of such corporate limits;

(c) Those points in the town of Geddes, Onondaga County, N.Y., which are not within 5 miles of the corporate limits of Syracuse, N.Y.;

(d) Those points in the towns of Van Buren and Lysander, Onondaga County, N.Y., not within 5 miles of the corporate limits of Syracuse, N.Y., and within an area bounded by a line beginning at the intersection of Van Buren Road with the line described in (b) above, thence northwesterly along Van Buren Road to its intersection with the cleared right-of-way of Niagara Mohawk Power Company, thence northwesterly and north along said right-of-way to its intersection between Church Road and Emerick Road, with the cleared right-of-way of New York State Power Authority, thence easterly along said cleared right-of-way to its intersection with the Seneca River, thence south along the Seneca River to its intersection, near Gaskin Road, with the cleared right-of-way of Niagara Mohawk Power Company, thence southwesterly along said cleared right-of-way to its intersection with the eastern limits of the Village of Baldwinsville, thence south along such Village limits to their intersection with a line of railroad presently operated by the Erie-Lackawanna Railroad Company, thence southeasterly along said line of railroad to its intersection with the Van-Buren Lysander Town line, thence southeasterly along the Van-Buren Lysander Town line to its intersection with the Van-Buren Geddes Town line, thence southeasterly along the Van-Buren Geddes Town line to the line described in (b) above.

Sec. 21 *Baltimore, Md.*

The zone adjacent to and commercially a part of Baltimore, Md., within which transportation by motor vehicle, in interstate or foreign commerce, not under a common control, management, or arrangement for a continuous carriage to or from a point beyond the zone is partially exempt from regulation under section 203(b)(8) of the Interstate Commerce Act (49 U.S.C. 303(b)(8)) includes and it is comprised of all as follows:

(a) The municipality of Baltimore itself;

(b) All points within a line drawn 5 miles beyond the boundaries of Baltimore;

(c) All points in that area east of the line described in paragraph (b) of this section bounded by a line as follows: Beginning at the point where the line described in paragraph (b) of this section crosses Dark Head Creek and extending in a southeasterly direction along the center of Dark Head Creek and beyond to a point off Wilson Point, thence in a northeasterly direction to and along the center of Frog Mortar Creek to Stevens Road, thence northerly along Stevens Road to Eastern Avenue, thence easterly along Eastern Avenue to Bengies Road, thence northwesterly along Bengies Road, to the right-of-way of the Penn Central Transportation Co., thence westerly along such right-of-way to the junction thereof with the line described in paragraph (b) of this section;

(d) All points in that area south of the line described in paragraph (b) of this section, bounded on the west by the right-of-way of the line of the Penn Central Transportation Co., extending between Stony Run and Severn, Md., and on the south by that part of Maryland Highway 176, extending easterly from the said railroad to its junction with the line described in paragraph (b) of this section;

(e) All points in that area southwest of the line described in paragraph (b) of this section, bounded by a line as follows: Beginning at the point where the line described in paragraph (b) of this section crosses the Baltimore-Washington Expressway and extending in a southwesterly direction along the Baltimore-Washington Expressway to its intersection with Maryland Highway 176, thence westerly along Maryland Highway 176 to its intersection with the Howard-Anne Arundel County line, thence southwesterly along said county line to its intersection with Maryland Highway 32, thence northwesterly along Maryland Highway 32 to its intersection with the Little Patuxent River, thence northerly along the Little Patuxent River to the intersection of its north fork and its east

fork located approximately 1 mile north of the intersection of Maryland Highway 32 and Berger Road, thence easterly along the east fork of the Little Patuxent River to its intersection with Broken Land Parkway, thence southerly along Broken Land Parkway to its intersection with Snowden River Parkway, thence easterly along Snowden River Parkway, to its intersection with relocated Maryland Highway 175, thence southeasterly along relocated Maryland Highway 175, to its intersection with Lark Brown Road, thence northeasterly along Lark Brown Road to its intersection with Maryland Highway 175, thence southerly along Maryland Highway 175 to its intersection with Interstate Highway 95, thence northeasterly along Interstate Highway 95 to its intersection with the line described in paragraph (b) of this section;

(f) All points in that area north of the line described in paragraph (b) of this section bounded by a line as follows: Beginning at the junction of the line described in paragraph (b) of this section and the Baltimore-Harrisburg Expressway (Interstate Highway 83), thence northerly along Interstate Highway 83 to its junction with Shawan Road, thence easterly along Shawan Road to its junction with York Road (Maryland Highway 45) and continuing to a point 1,500 feet east of Maryland Highway 45, thence southerly along a line 1,500 feet east of the parallel to Maryland Highway 45 to its junction with the line described in paragraph (b) of this section;

(g) All points in that area west of the line described in paragraph (b) of this section bounded by a line as follows: Beginning at the point where the line described in paragraph (b) of this section intersects U.S. Highway 40 west of Baltimore, Md., and extending in a westerly direction along U.S. Highway 40 to its intersection with St. John's Lane, thence southerly along St. John's Lane to its intersection with Maryland Highway 144, thence easterly along Maryland Highway 144 to its intersection with the line in paragraph (b) of this section;

(h) All of any municipality any part of which is within the limits of the combined areas defined in paragraphs (b), (c), (d), (e), (f), and (g) of this section;

(i) All of any municipality wholly surrounded, or surrounded except for a water boundary, by the city of Baltimore or by any municipality included under the terms of (h) above.

Sec. 22 *Cleveland, Ohio*

The zone adjacent to and commercially a part of Cleveland, Ohio, within which transportation by motor vehicle, in interstate or foreign commerce, not under a common control, management, or arrangement for a continuous carriage to or from a point beyond the zone is partially exempt from regulation under section 203(b)(8) of the Interstate Commerce Act (49 U.S.C. 303(b)(8)) includes and it is comprised of all as follows:

(a) All points in Cuyahoga County, Ohio, and

(b) All points in Wickliffe, Willoughby Hills, Waite Hill, Willoughby, Willowick, Eastlake, Lakeline, Timberlake, and Mentor, Lake County, Ohio.

Sec. 23 *Detroit, Mich.*

For the purpose of administration and enforcement of Part II of the Interstate Commerce Act, the zone adjacent to and commercially a part of Detroit, Mich., in which transportation by motor vehicle in interstate or foreign commerce, not under a common control, management, or arrangement for a continuous carriage or shipment to or from a point beyond the zone, will be partially exempt under section 203(b)(8) of the act (49 U.S.C. 303(b)(8)) from regulation, is hereby determined to include, and to be comprised of, all that area within a line as follows:

Beginning at a point on Lake St. Clair opposite the intersection of Fifteen Mile Road and Michigan Highway 29 and extending south and southwest along the shore of Lake St. Clair, to the Detroit River, thence along such River (east of Belle Isle) and Trenton Channel to a point opposite Sibley Road, thence west to and along Sibley Road to Waltz Road, thence north along Waltz Road to Wick Road, thence west along Wick Road to Cogswell Road, thence north along Cogswell Road to Van Born Road, thence east along Van Born Road to Newburgh Road, thence north along Newburgh Road to its junction with Halsted Road, thence north along Halsted Road to West Maple Road, thence east along West Maple Road to Telegraph Road, thence north along Telegraph Road to Sixteen Mile Road, thence east along Sixteen Mile Road to Utica Road, thence southeasterly along Utica Road to Fifteen Mile Road (also called East Maple Road), thence along Fifteen Mile Road and across Michigan Highway 29 to Lake St. Clair, the point of beginning.

Sec. 24 *Seattle, Wash.*

The zone adjacent to and commercially a part of Seattle, Wash., within which transportation by motor vehicle, in interstate or foreign commerce, not under common control, management, or arrangement for continuous carriage or shipments to or from a point beyond such zone, is partially exempt from regulation under section 203(b)(8) of the Interstate Commerce Act (49 U.S.C. 303(b)(8)) includes and is comprised of all points as follows:

(a) The municipality of Seattle itself.

(b) All points within a line drawn 5 miles beyond the municipal limits of Seattle, except points on Bainbridge Island, Vashon Island, and Blake Island.

(c) All points more than 5 miles beyond the municipal limits of Seattle (1) within a line as follows: Beginning at that point south of Seattle where the eastern shore of Puget Sound intersects the line described in paragraph (b) of this section, thence southerly along the eastern shore of Puget Sound to Southwest 192d Street, thence easterly along Southwest 192d Street to the point where it again intersects the line described in paragraph (b) of this section; and (2) within a line as follows: Beginning at the junction of the southern corporate limits of Kent, Wash., and Washington Highway 181, and extending south along Washington Highway 181 to the northern corporate limits of Auburn, Wash., thence along the western, southern, and eastern corporate limits of Auburn to the junction of the northern corporate limits of Auburn and Washington Highway 167, thence northerly along Washington Highway 167 to its junction with the southern corporate limits of Kent, Wash., including all points on the highways named.

(d) All points more than 5 miles beyond the municipal limits of Seattle within a line as follows: Beginning at the junction of the northern corporate limits of Lynwood, Wash., and U.S. Highway 99, thence north along U.S. Highway 99 to its junction with Washington Highway 525, thence along Washington Highway 525 to its junction with West Casino Road, thence east along West Casino Road to the western boundary of the Everett facilities of the Boeing Co. at or near 4th Avenue West, thence along the western, northern and eastern boundaries of the facilities of the Boeing Co. to West Casino Road, thence east along West Casino Road to its junction with U.S. Highway 99, thence south along U.S. Highway 99 to 112th Street, thence easterly along 112th Street to its junction with Interstate Highway 5, thence southerly along Interstate Highway 5 to its intersection with the present zone limits, including all points on the named routes.

(e) All of any municipality any part of which is within the limits set forth in (b) above.

(f) All of any municipality wholly surrounded, or so surrounded except for a water boundary, by the city of Seattle or by any municipality included under the terms of (b) above.

Sec. 25 Albany, N.Y.

For the purpose of administration and enforcement of Part II of the Interstate Commerce Act, the zone adjacent to and commercially a part of Albany, N.Y., in which transportation by motor vehicle in interstate or foreign commerce, not under a common control, management, or arrangement for a continuous carriage or shipment to or from a point beyond the zone, will be partially exempt under section 203(b)(8) of the act (49 U.S.C. 303(b)(8)) from regulations, is hereby determined to include, and to be comprised of, the following:

(a) The municipality of Albany itself,

(b) All points within a line drawn 5 miles beyond the municipal limits of Albany,

(c) All points in that area more than 5 miles beyond the municipal limits of Albany bounded by a line as follows: Beginning at that point on Swatling Road (in the Town of Colonie) where it crosses the line described in (b) above and extending northerly along such road to the municipal limits of Cohoes, thence along the western and northern boundary of Cohoes to the Mohawk River, thence along such river to the northern boundary of the Town of Waterford, thence along the northern and eastern boundaries of the Town of Waterford to the northern boundary of the City of Troy (all of which city is included under the next following provision),

(d) All of any municipality any part of which is within the limits of the combined areas defined in (b) and (c) above, and

(e) All of any municipality wholly surrounded, or so surrounded except for a water boundary, by the municipality of Albany or by any other municipality included under the terms of (d) above.

Sec. 26 Minneapolis-St. Paul, Minn.

The zone adjacent to and commercially a part of Minneapolis-St. Paul, Minn, within which transportation by motor vehicle, in interstate or foreign commerce, not under a common control, management, or arrangement for a continuous carriage to or from a point beyond the zone is partially exempt from regulation under section 203(b)(8) of the Interstate Commerce Act (49 U.S.C. 303(b)(8)) includes and it is comprised of all as follows:

Beginning at the intersection of Minnesota Highway 36 and the Minnesota River and extending along the Minnesota River to the southwest corner of the city of Bloomington, thence north along the western boundaries of the city of Bloomington and the village of Edina to the southern boundary of the city of Hopkins, thence along the southern, western, and northern boundaries of the city of Hopkins to the western boundary of the city of St. Louis Park, thence north along the western boundaries of the city of St. Louis Park and the village of Golden Valley to the southeast corner of the village of Plymouth, thence west along the southern boundary of Plymouth to Interstate Highway 494, thence north along Interstate Highway 494 to Minnesota Highway 55, thence southeast along Minnesota Highway 55 to the western boundary of the village of Golden Valley, thence north along the western boundaries of the

villages of Golden Valley and New Hope to the northwestern corner of the village of New Hope, thence east along the northern boundary of the village of New Hope and the city of Crystal to the western boundary of the village of Brooklyn Center, thence north along the western boundary of the village of Brooklyn Center to its northern boundary, thence east along such northern boundary to the Hennepin County-Anoka County line, thence north along such county line to the northwestern corner of the village of Spring Lake Park in Anoka County, thence east along the northern boundary of the village of Spring Lake Park to the northwest corner of Mounds View Township in Ramsey County, thence east and south along the northern and eastern boundaries of Mounds View Township to the northwestern corner of the village of Little Canada, thence east and south along the northern and eastern boundaries of Little Canada to the northwest corner of the village of Maplewood, thence east and south along the northern and eastern boundaries of the village of Maplewood to the northeastern corner of the village of North St. Paul, thence south along the eastern boundary of the village of North St. Paul to the southeast corner of such village, thence south along the eastern boundary of the village of Maplewood to the northeastern corner of the village of Newport, thence south and west along the eastern and southern boundaries of the village of Newport to U.S. Highway 61, thence southeasterly along U.S. Highway 61, to the eastern boundary of the village of St. Paul Park, thence along the eastern, southern, and western boundaries of the village of St. Paul Park to a point on the Mississippi River opposite the southeast corner of the original village of Inver Grove, thence westerly across the river and along the southern and western boundaries of the original village of Inver Grove to the northwest corner of such village, thence due north to the southern boundary of South St. Paul, thence north and west along the western and southern boundaries of South St. Paul to the southeastern corner of West St. Paul, thence west along the southern boundary of West St. Paul to County Highway 63, thence south along County Highway 63 to its junction with County Highway 63A, thence west along County Highway 63A to its junction with Minnesota Highway 49, thence north along Minnesota Highway 49 to its junction with County Highway 28, thence west along County Highway 28 to its junction with Minnesota Highway 13, thence southwest along Minnesota Highway 13 to its junction with Minnesota Highway 36, thence north and northwest along Minnesota Highway 36 to the Minnesota River, the point of beginning.

Sec. 27 New Orleans, La.

The zone adjacent to and commercially a part of New Orleans, La., within which transportation by motor vehicle, in interstate or foreign commerce, not under common control, management, or arrangement for a continuous carriage or shipment to or from a point beyond the zone is partially exempt from regulation under section 203(b)(8) of the Interstate Commerce Act (49 U.S.C. 303(b)(8)), includes and is comprised of all points in the area bounded as follows:

Commencing at a point on the shore of Lake Pontchartrain where it is crossed by the Jefferson Parish-Orleans Parish line; thence easterly along the shore of Lake Pontchartrain to the Rigolets; thence through the Rigolets in an easterly direction to Lake Borgne; thence southwesterly along the shore of Lake Borgne to the Bayou Bienvenue; thence in a general westerly direction along the Bayou Bienvenue (which also constitutes the Orleans Parish-St. Bernard Parish line) to Paris Road; thence in a southerly direction along Paris Road to the Back Protection Levee; thence in a southeasterly direction along the Back Protection Levee (across Lake Borgne Canal) to a point 1 mile north of Louisiana Highway 46; thence in an easterly direction 1 mile north of Louisiana Highway 46 to longitude 89°50′ W.; thence south along longitude line 89°50′ W. (crossing Louisiana Highway 46 approximately three-eighths of a mile east of Toca) to Forty Arpent Canal; thence westerly, northwesterly, and southerly along Forty Arpent Canal to Scarsdale Canal; thence northwesterly along Scarsdale Canal and beyond it in the same direction to the middle of the Mississippi River; thence southerly along the middle of the Mississippi River to the Augusta Canal; thence in a westerly direction along the Augusta Canal to the Gulf Intracoastal Waterway; thence in a northerly direction along the middle of the Gulf Intracoastal Waterway (Harvey Canal) to the point where Lapalco Boulevard runs perpendicular to the Gulf Intracoastal Waterway (Harvey Canal); thence in a westerly direction along Lapalco Boulevard to its junction with Barataria Boulevard; thence north on Barartaria Boulevard to a point approximately 2 miles south of the Mississippi River where a high tension transmission line crosses Barataria Boulevard; thence in a westerly direction following such transmission line to the intersection thereof with U.S. Highway 90; thence westerly along U.S. Highway 90 to the Jefferson Parish-St. Charles Parish line; thence north along such parish line to the middle of the Mississippi River; thence westerly along the middle of the Mississippi River to a point south of Almedia Road; thence north to Almedia Road; thence in a northerly direction along Almedia Road to its junction with Highway

61; thence north to the shore of Lake Pontchartrain; thence along the shore of Lake Pontchartrain in an easterly direction to the Jefferson Parish-Orleans Parish line, the point of beginning.

Sec. 28 *Pittsburgh, Pa.*

For the purpose of administration and enforcement of Part II of the Interstate Commerce Act, the zone adjacent to and commercially a part of Pittsburgh, Pa., in which transportation by motor vehicle in interstate or foreign commerce, not under a common control, management, or arrangement for a continuous carriage or shipment to or from a point beyond the zone, will be partially exempt under section 203(b)(8) of the act (49 U.S.C. 303(b)(8)) from regulation, is hereby determined to include, and to be comprised of, the following:

(a) All points in Allegheny County, Pa., except Forward, Elizabeth, South Versailles, Marshall (including the Borough of Bradford Woods), Pine Richland, West Deer and Fawn Townships and that part of Frazer Township north of a line made by extending easterly in a straight line the southern boundary of West Deer Township.

(b) Borough of Trafford situated in both Alleghency and Westmoreland Counties;

(c) Borough of Ambridge and Harmony Township located in Beaver County; and

(d) The City of New Kensington and Borough of Arnold in Westmoreland County.

Sec. 29 *Portland, Oreg.*

For the purpose of administration and enforcement of Part II of the Interstate Commerce Act, the zone adjacent to and commercially a part of Portland, Oreg., in which transportation by motor vehicle in interstate or foreign commerce, not under a common control, management, or arrangement for a continuous carriage or shipment to or from a point beyond the zone, will be partially exempt under section 203(b)(8) of the act (49 U.S.C. 303(b)(8)) from regulation, is hereby determined to include, and to be comprised of, the following:

(a) The municipality itself.

(b) All points in Oregon within a line drawn 5 miles beyond the corporate limits of Portland.

(c) All of any municipality any part of which is within the line described in (b) above.

(d) All of any municipality wholly surrounded, or so surrounded except for a water boundary, by the city of Portland or by any municipality included under the terms of (c) above.

Sec. 30 *Vancouver, Wash.*

For the purpose of administration and enforcement of Part II of the Interstate Commerce Act, the zone adjacent to and commercially a part of Vancouver, Wash., in which transportation by motor vehicle in interstate or foreign commerce, not under a common control, management, or arrangement for a continuous carriage or shipment to or from a point beyond the zone, will be partially exempt under section 203(b)(8) of the act (49 U.S.C. 303(b)(8)) from regulation, is hereby determined to include, and to be comprised of, the following:

(a) The municipality itself.

(b) All points in Washington within a line drawn 4 miles beyond the corporate limits of Vancouver.

(c) All of any municipality any part of which is within the line described in (b) above.

(d) All of any municipality wholly surrounded, or so surrounded except for a water boundary, by the City of Vancouver or by any municipality included under the terms of (c) above.

Sec. 31 *Charleston, S.C.*

The zone adjacent to and commercially a part of Charleston, S.C., within which transportation by motor vehicle, in interstate or foreign commerce, not under a common control, management, or arrangement for a continuous carriage or shipment to or from a point beyond the zone is partially exempt, under section 203(b)(8) of the Interstate Commerce Act (49 U.S.C. 303(b)(8)), from regulation, includes and is comprised of, all points and places as follows:

(a) The municipality of Charleston itself.

(b) All points within a line drawn 4 miles beyond the boundaries of Charleston.

(c) All points in that area north of the line described in paragraph (b) of this section, bounded by a line as follows: Beginning at the point where the line described in paragraph (b) of this section crosses Cooper River and extending in a northerly direction along the center of Cooper River to Goose Creek; thence north and west along the center of Goose Creek to the dam of the reservoir of the Charleston waterworks; thence northwesterly along the west bank of the Charleston waterworks reservoir for approximately one mile to an unnamed creek; thence westerly along the center of this unnamed creek for approximately one mile to U.S. Highway 52; thence northerly along U.S. Highway 52 to junction South Carolina Highway S–10–75; thence westerly along South Carolina Highway S–10–75 approximately one and one half miles to a point one quarter mile west of the track of the Southern Railway Company; thence southeasterly along a line one quarter of a mile west of, and parallel to, the track of the Southern Railway Company to the junction thereof with the line described in paragraph (b) of this section.

(d) All of any municipality any part of which is within the limits of the combined

areas defined in paragraphs (1) and (c) of this section.

(e) All of any municipality wholly surrounded, or so surrounded except for a water boundary, by the city of Charleston or by any municipality included under the terms of paragraph (d) of this section.

Sec. 32 *Charleston, W. Va.*

That zone adjacent to and commercially a part of Charleston, W. Va., within which transportation by motor vehicle, in interstate or foreign commerce, not under a common control, management, or arrangement for a continuous carriage or shipment to or from a point beyond the zone, is partially exempt, under section 203(b)(8) of the Interstate Commerce Act (49 U.S.C. 303(b)(8)), from regulation, includes, and is comprised of, all points and places as follows:

(a) The municipality of Charleston, W. Va., itself.

(b) All points within a line drawn 4 miles beyond the corporate limits of Charleston, W. Va.

(c) All points in that area northwest of those described in (b) above, bounded by a line as follows: Beginning at a point on the line described in (b) above, one-half mile south of U.S. Highway 60 west of Charleston, thence westerly along a line one-half mile south of the junction of U.S. Highway 60 with West Virginia Highway 17 near 2¾ Mile Creek, thence westerly along a line one-half mile south of and parallel to West Virginia Highway 17 to the Coal River, thence north along the center of the Coal River to West Virginia Highway 17, thence northerly along West Virginia Highway 17 to Scary Creek, near Scary, W. Va., thence east along Scary Creek to the center of the Kanawha River, thence northerly along the center of the Kanawha River to a point opposite the mouth of Blake Creek (between Nitro and Poca, W. Va.), thence easterly along a straight line drawn through the junction of U.S. Highway 35 and West Virginia Highway 25 to a point one-half mile beyond said junction, thence southerly along a line one-half mile northeast of and parallel to West Virginia Highway 25 to the junction of the line described in (b) above.

(d) All points in that area southeast of those described in (b) above, bounded by a line as follows: Beginning at a point on the line described in (b) above one-half mile south of the Kanawha River, thence easterly along a line one-half mile south of, and parallel to, the Kanawha River to junction with a straight line intersecting the highway bridge at Chelyan, W. Va., thence northerly along said straight line across the Kanawha River to a point one-half mile north of the Kanawha River, thence westerly along a line one-half mile north of and parallel to the Kanawha River to the junction of the line described in (b) above.

(e) All of any municipality any part of which is within the limits of the combined areas defined in (b), (c), and (d) above.

Sec. 33 *Memphis, Tenn.*

That zone adjacent to and commercially a part of Memphis, Tenn., within which transportation by motor vehicle, in interstate or foreign commerce, not under a common control management, or arrangement for a continuous carriage or shipment to or from a point beyond the zone, is partially exempt, under section 203(b)(8) of the Interstate Commerce Act (49 U.S.C. 303(b)(8)) from regulation, includes, and is comprised of, all points as follows:

(a) The municipality of Memphis, Tenn., itself.

(b) All points within a line drawn 5 miles beyond the corporate limits of Memphis, Tenn.

(c) All points in that part of Shelby County, Tenn., north of the line described in paragraph (b) of this section, bounded by a line as follows: Beginning at the intersection of the line described in paragraph (b) of this section and U.S. Highway 51 north of Memphis, thence northeasterly along U.S. Highway 51 for approximately 3 miles to its intersection with Lucy Road, thence easterly along Lucy Road for approximately 1.4 miles to its intersection with Chase Road, thence northerly along Chase Road for approximately 0.6 mile to its intersection with Lucy Road thence easterly along Lucy Road for approximately 0.8 mile to its intersection with Main Road, thence southereasterly along Main Road approximately 0.3 mile to its intersection with Amherst Road, thence southerly and easterly along Amherst Road for approximately 0.8 mile to its intersection with Raleigh-Millington Road, thence southerly along Raleigh-Millington Road for approximately 2 miles to its intersection with the line described in paragraph (b) of this section north of Memphis;

(d) All of any municipality any part of which is within the limits of the combined areas described in paragraphs (b) and (c) of this section.

Sec. 34 *Houston, Tex.*

The zone adjacent to, and commercially a part of Houston, Tex., and contiguous municipalities in which transportation by motor vehicle, in interstate or foreign commerce, not under common control, management, or arrangement for a continuous carriage or shipment to or from a point beyond the zone, will be partially exempt under section 203(b)(8) of the act from regulation, is hereby defined to include the area which would result by application of the general formula promulgated in §372.241, and in addition thereto, the municipalities of Baytown, La Porte and Lomax, Tex.

Sec. 35 *Pueblo, Colo.*

The zone adjacent to and commercially a part of Pueblo, Colo., within which transportation by motor vehicle, in interstate or foreign commerce, not under a common control, management, or arrangement for a continuous carriage or shipment to or from a point beyond such zone is partially exempt from regulation under section 203(b)(8) of the Interstate Commerce Act (49 U.S.C. 303(b)(8)), includes and is comprised of all points as follows:

(a) the municipality of Pueblo, Colo., itself;

(b) All points within a line drawn 4 miles beyond the corporate limits of Pueblo, Colo.:

(c) All of the area known as the Pueblo Memorial Airport, consisting of about 3,500 acres, not within 4 miles of the corporate limits of Pueblo, Colo., and within an area located on the East of Pueblo, the nearest point being about 3.80 miles from the city limits of Pueblo, and bounded on the south by the tracks of the Santa Fe Railroad and the Missouri Pacific Railroad, and a public highway known as Baxter Road and designated as U.S. Highway 50 Bypass and Colorado Highway 96, with such property extending north, west, and east of the described southern base line.

Sec. 36 *Warren, Ohio.*

The zone adjacent to and commercially a part of Warren, Ohio, within which transportation by motor vehicle, in interstate or foreign commerce, not under a common control, management, or arrangement for a continuous carriage or shipment to or from a point beyond the zone, is partially exempt, under section 203(b)(8) of the Interstate Commerce Act (49 U.S.C. 303(b)(8)) from regulation includes, and is comprised of, all points as follows:

(a) The municipality of Warren, Ohio, itself.

(b) All points within a line drawn 4 miles beyond the corporate limits of Warren, Ohio.

(c) All points in that area, south of the line in paragraph (b) of this section, bounded by a line as follows: Beginning at the point where the line described in paragraph (b) of this section intersects Ellsworth-Baily Road, thence south along Ellsworth-Baily Road to the Ohio Turnpike, thence southeast along the Ohio Turnpike to New Hallock-Young Road, thence northeast along New Hallock-Young Road to Hallock-Young Road, thence east along Hallock-Young Road to junction Ohio Highway 45 (Salem-Warren Road), thence north along Ohio Highway 45 (Salem-Warren Road) to its intersection with the line described in paragraph (b) of this section.

Sec. 37 *Louisville, Ky.*

The zone adjacent to and commercially a part of Louisville, Ky., within which transportation by motor vehicle, in interstate or foreign commerce, not under a common control, management, or arrangement for a continuous carriage or shipment to or from a point beyond such zone, is partially exempt from regulation under section 203(b)(8) of the Interstate Commerce Act (49 U.S.C. 303(b)(8)) includes and is comprised of all points as follows:

(a) The municipality of Louisville, Ky., itself;

(b) All other municipalities and unincorporated areas within 5 miles of the corporate limits of Louisville, Ky., and all of any municipality any part of which lies within 5 miles of such corporate limits; and

(c) Those points not within 5 miles of the corporate limits of Louisville, Ky., and within an area bounded by a line beginning at the junction of Kentucky Highway 146 (LaGrange Road) and Kentucky Highway 1447 (Westport Road), thence over Kentucky Highway 146 to the junction of Kentucky Highway 146 and Kentucky Highway 841 (Jefferson Freeway), thence over Kentucky Highway 841 to the junction of Kentucky Highway 841 and Kentucky Highway 1447, thence over Kentucky Highway 1447 to junction Kentucky Highway 1447 and Kentucky Highway 146, the point of beginning, all within Jefferson County, Ky.

Sec. 38 *Sioux City, Iowa.*

The zone adjacent to and commercially a part of Sioux City, Iowa, within which transportation by motor vehicle, in interstate or foreign commerce, not under a common control, management, or arrangement for a continuous carriage or shipment to or from a point beyond such zone, is partially exempt from regulation under section 203(b)(8) of the Interstate Commerce Act (49 U.S.C. 303(b)(8)) includes and is comprised of all points as follows:

(a) The area which would result by application of the general formula promulgated in §372.241; and, in addition thereto,

(b) That area bounded by a line beginning at the intersection of Interstate Highway 29 and the line described in paragraph (a) of this section, and extending southeasterly along Interstate Highway 29 to its intersection with the Liberty-Lakeport Township, Iowa, line, thence westerly along the Liberty-Lakeport Township, Iowa, line to the Missouri River, thence northerly along the east bank of the Missouri River to its intersection with the line described in paragraph (a) of this section, thence along the line described in paragraph (a) of this section, to the point of beginning.

Sec. 39 *Beaumont, Tex.*

The zone adjacent to and commercially a part of Beaumont, Tex., within which transportation by motor vehicle, in interstate or foreign commerce, not under a common control, management, or arrangement for a continuous carriage or shipment to or from a point beyond such zone, is partially exempt from regulation under section 203(b)(8) of the Interstate Commerce Act (49 U.S.C. 303(b)(8)) includes and is comprised of all points as follows:

(a) The areas which would result by application of the general formula promulgated in §372.241 for Beaumont, Tex.; and in addition thereto,

(b) That area bounded by a line beginning at that point where the west bank of Hillebrandt Bayou intersects the line described in paragraph (a) of this section; thence along the west bank of Hillebrandt Bayou to its confluence with Taylors Bayou: thence in a southeasterly direction along the west and south banks of Taylors Bayou to its confluence with the Intracoastal Waterway; thence along the west and north banks of the Intra-coastal Waterway to its confluence with Sabine River and Sabine Lake at a point immediately east of Groves; thence in a northeasterly direction along the north and west banks of Sabine Lake and Sabine River to the Orange-Newton County line; thence westerly along said county line to the west right-of-way line of State Highway 87; thence southerly along the west right-of-way line of State Highway 87 to the north right-of-way line of Interstate Highway 10; thence westerly along the north right-of-way line of Interstate Highway 10 to intersection with the line described in paragraph (a) of this section; thence along the line described in paragraph (a) of this section, to the point of beginning.

Sec. 40 *Metropolitian Government of Nashville and Davidson County, Tenn.*

The zone adjacent to and commercially a part of the Metropolitan Government of Nashville and Davidson County, Tenn, within which transportation by motor vehicle, in interstate or foreign commerce, not under a common control, management, or arrangement for a continuous carriage or shipment to or from a point beyond the zone, is partially exempt from regulation under section 203(b)(8) of the Interstate Commerce Act (49 U.S.C. 303(b)(8)) includes and is comprised of all points as follows:

(a) The Metropolitan Government of Nashville and Davidson County itself.

(b) All of any municipality wholly surrounded, or so surrounded except for a water boundary, by the Metropolitan Government of Nashville and Davidson County.

Sec. 41 *Consolidated City of Indianapolis, Ind.*

The zone adjacent to and commercially a part of the Consolidated City of Indianapolis, Ind., within which transportation by motor vehicle, in interstate or foreign commerce, not under a common control, management, or arrangement for a continuous carriage or shipment to or from a point beyond the zone, is partially exempt from regulation under section 203(b)(8) of the Interstate Commerce Act (49 U.S.C. 303(b)(8) includes and is comprised of all points as follows:

(a) The Consolidated City of Indianapolis, Ind., itself.

(b) All of any municipality wholly surrounded or so surrounded except for a water boundary, by the Consolidated City of Indianapolis.

Sec. 42 *Lexington-Fayette Urban County, Ky.*

The zone adjacent to and commercially a part of Lexington-Fayette Urban County, Ky., within which transporation by motor vehicle, in interstate or foreign commerce, not under a common control, management, or arrangement for a continuous carriage or shipment to or from a point beyond the zone, is partially exempt from regulation under section 203(b)(8) of the Interstate Commerce Act (49 U.S.C. 303(b)(8)) includes and is comprised of all points as follows:

(a) Lexington-Fayette Urban County, Ky., itself.

(b) All other municipalities and unincorporated areas within 5 miles of the intersection of U.S. Highway 27 (Nicholasville Road) with the corporate boundary line between Jessamine County, Ky., and Lexington-Fayette Urban County, Ky.

Sec. 43 *Definitions.*

For the purposes of this part, the following terms are defined:

(a) ''Municipality'' means any city, town, village, or borough which has been created by special legislative act or which has been, otherwise, individually incorporated or chartered pursuant to general State laws, or which is recognized as such, under the Constitution or by the laws of the State in which located, and which has a local government. It does not include a town of the township or New England type.

(b) ''Contiguous municipalities'' means municipalities, as defined in paragraph (a) of this section, which have at some point a common municipal or corporate boundary.

(c) ''Unincorporated area'' means any area not within the corporate or municipal boundaries of any municipality as defined in paragraph (a) of this section.

Sec. 44 *Commercial zones determined generally, with exceptions.*

The commercial zone of each municipality in the United States, with the exceptions indicated in the note at the end of this section, within which the transportation of passengers or property, in interstate or foreign commerce, when not under a common control, management, or arrangement for a continuous carriage or shipment to or from a point without such zone, is exempt from all provisions of Part II, Interstate Commerce Act, except the provisions of section 204 relative to the qualifications and maximum hours of service of employees and safety of operation or standards of equipment shall be deemed to consist of:

(a) The municipality itself, hereinafter called the base municipality;

(b) All municipalities which are contiguous to the base municipality;

(c) All other municipalities and all unincorporated area within the United States which are adjacent to the base municipality as follows:

(1) When the base municipality has a population less than 2,500 all unincorporated areas within two miles of its corporate limits and all of any other municipality any part of which is within two miles of the corporate limits of the base municipality,

(2) When the base municipality has a population of 2,500 but less than 25,000, all unincorporated areas within 3 miles of its corporate limits and all of any other municipality any part of which is within 3 miles of the corporate limits of the base municipality,

(3) When the base municipality has a population of 25,000 but less than 100,000, all unincorporated areas within 4 miles of its corporate limits and all of any other municipality any part of which is within 4 miles of the corporate limits of the base municipality, and

(4) When the base municipality has a population of 100,000 or more, all unincorporated areas within 5 miles of its corporate limits and all of any other municipality any part of which is within 5 miles of the corporate limits of the base municipality, and

(d) All municipalities wholly surrounded, or so surrounded except for a water boundary, by the base municipality, by any municipality contiguous thereto, or by any municipality adjacent thereto which is included in the commercial zone of such base municipality under the provisions of paragraph (c) of this section.

NOTE: Except: Municipalities the commercial zones of which have been or are hereafter individually or specially determined.

Sec. 45 *Controlling distances and population data.*

In the application of § 372.241:

(a) Air-line distances or mileages about corporate limits of municipalities shall be used.

(b) The population of any municipality shall be deemed to be the highest figure shown for that municipality in any decennial census since (and including) the 1940 decennial census.

[53 FR 18058, May 19, 1988, as amended at 62 FR 49942, Sept. 24, 1997]

APPENDIX G TO SUBCHAPTER B—MINIMUM PERIODIC INSPECTION STANDARDS

A vehicle does not pass an inspection if it has one of the following defects or deficiencies:

1. *Brake System.*

a. *Service brakes.*—(1) Absence of braking action on any axle required to have brakes upon application of the service brakes (such as missing brakes or brake shoe(s) failing to move upon application of a wedge, S-cam, cam, or disc brake).

(2) Missing or broken mechanical components including: shoes, lining, pads, springs, anchor pins, spiders, cam rollers, push-rods, and air chamber mounting bolts.

(3) Loose brake components including air chambers, spiders, and cam shaft support brackets.

(4) Audible air leak at brake chamber (Example-ruptured diaphragm, loose chamber clamp, etc.).

(5) Readjustment limits. The maximum stroke at which brakes should be readjusted is given below. Any brake ¼″ or more past the readjustment limit or any two brakes less than ¼″ beyond the readjustment limit shall be cause for rejection. Stroke shall be measured with engine off and reservoir pressure of 80 to 90 psi with brakes fully applied.

BOLT TYPE BRAKE CHAMBER DATA

Type	Effective area (sq. in.)	Outside dia. (in.)	Maximum stroke at which brakes should be readjusted
A	12	6 15/16	1 3/8
B	24	9 3/16	1 3/4
C	16	8 1/16	1 3/4
D	6	5 1/4	1 1/4
E	9	6 3/16	1 3/8
F	36	11	2 1/4
G	30	9 7/8	2

ROTOCHAMBER DATA

Type	Effective area (sq. in.)	Outside dia. (in.)	Maximum stroke at which brakes should be readjusted
9	9	4 9/32	1 1/2
12	12	4 13/16	1 1/2
16	16	5 13/32	2
20	20	5 15/16	2
24	24	6 13/32	2
30	30	7 1/16	2 1/4
36	36	7 5/8	2 3/4
50	50	8 7/8	3

CLAMP TYPE BRAKE CHAMBER DATA

Type	Effective area (sq. in.)	Outside dia. (in.)	Maximum stroke at which brakes should be readjusted
6	6	4 1/2	1 1/4
9	9	5 1/4	1 3/8
12	12	5 11/16	1 3/8
16	16	6 3/8	1 3/4
20	20	6 25/32	1 3/4
24	24	7 7/32	[1] 1 3/4
30	30	8 3/32	2
36	36	9	2 1/4

[1] (2″ for long stroke design).

Wedge Brake Data.— Movement of the scribe mark on the lining shall not exceed 1/16 inch.

(6) Brake linings or pads.

(a) Lining or pad is not firmly attached to the shoe;

(b) Saturated with oil, grease, or brake fluid; or

(c) Non-steering axles: Lining with a thickness less than 1/4 inch at the shoe center for air drum brakes, 1/16 inch or less at the shoe center for hydraulic and electric drum brakes, and less than 1/8 inch for air disc brakes.

(d) Steering axles: Lining with a thickness less than 1/4 inch at the shoe center for drum brakes, less than 1/8 inch for air disc brakes and 1/16 inch or less for hydraulic disc and electric brakes.

(7) Missing brake on any axle required to have brakes.

(8) Mismatch across any power unit steering axle of:

(a) Air chamber sizes.

(b) Slack adjuster length.

b. *Parking Brake System.* No brakes on the vehicle or combination are applied upon actuation of the parking brake control, including driveline hand controlled parking brakes.

c. *Brake Drums or Rotors.*

(1) With any external crack or cracks that open upon brake application (do not confuse short hairline heat check cracks with flexural cracks).

(2) Any portion of the drum or rotor missing or in danger of falling away.

d. *Brake Hose.*

(1) Hose with any damage extending through the outer reinforcement ply. (Rubber impregnated fabric cover is not a reinforcement ply). (Thermoplastic nylon may have braid reinforcement or color difference between cover and inner tube. Exposure of second color is cause for rejection.

(2) Bulge or swelling when air pressure is applied.

(3) Any audible leaks.

(4) Two hoses improperly joined (such as a splice made by sliding the hose ends over a piece of tubing and clamping the hose to the tube).

(5) Air hose cracked, broken or crimped.

e. *Brake Tubing.*

(1) Any audible leak.

(2) Tubing cracked, damaged by heat, broken or crimped.

f. *Low Pressure Warning Device* missing, inoperative, or does not operate at 55 psi and below, or 1/2 the governor cut-out pressure, whichever is less.

g. *Tractor Protection Valve.* Inoperable or missing tractor protection valve(s) on power unit.

h. *Air Compressor.*

(1) Compressor drive belts in condition of impending or probable failure.

(2) Loose compressor mounting bolts.

(3) Cracked, broken or loose pulley.

(4) Cracked or broken mounting brackets, braces or adapters.

i. *Electric Brakes.*

(1) Absence of braking action on any wheel required to have brakes.

(2) Missing or inoperable breakaway braking device.

j. *Hydraulic Brakes. (Including Power Assist Over Hydraulic and Engine Drive Hydraulic Booster).*

(1) Master cylinder less than 1/4 full.

(2) No pedal reserve with engine running except by pumping pedal.

(3) Power assist unit fails to operate.

(4) Seeping or swelling brake hose(s) under application of pressure.

(5) Missing or inoperative check valve.

(6) Has any visually observed leaking hydraulic fluid in the brake system.

(7) Has hydraulic hose(s) abraded (chafed) through outer cover-to-fabric layer.

(8) Fluid lines or connections leaking, restricted, crimped, cracked or broken.

(9) Brake failure or low fluid warning light on and/or inoperative.

k. *Vacuum Systems.* Any vacuum system which:

(1) Has insufficient vacuum reserve to permit one full brake application after engine is shut off.

(2) Has vacuum hose(s) or line(s) restricted, abraded (chafed) through outer cover to cord

ply, crimped, cracked, broken or has collapse of vacuum hose(s) when vacuum is applied.

(3) Lacks an operative low-vacuum warning device as required.

2. *Coupling devices.*

a. *Fifth Wheels.*

(1) Mounting to frame.

(a) Any fasteners missing or ineffective.

(b) Any movement between mounting components.

(c) Any mounting angle iron cracked or broken.

(2) Mounting plates and pivot brackets.

(a) Any fasteners missing or ineffective.

(b) Any welds or parent metal cracked.

(c) More than ⅜ inch horizontal movement between pivot bracket pin and bracket.

(d) Pivot bracket pin missing or not secured.

(3) Sliders.

(a) Any latching fasteners missing or ineffective.

(b) Any fore or aft stop missing or not securely attached.

(c) Movement more than ⅜ inch between slider bracket and slider base.

(d) Any slider component cracked in parent metal or weld.

(4) Lower coupler.

(a) Horizontal movement between the upper and lower fifth wheel halves exceeds ½ inch.

(b) Operating handle not in closed or locked position.

(c) Kingpin not properly engaged.

(d) Separation between upper and lower coupler allowing light to show through from side to side.

(e) Cracks in the fifth wheel plate.

Exceptions: Cracks in fifth wheel approach ramps and casting shrinkage cracks in the ribs of the body of a cast fifth wheel.

(f) Locking mechanism parts missing, broken, or deformed to the extent the kingpin is not securely held.

b. *Pintle Hooks.*

(1) Mounting to frame.

(a) Any missing or ineffective fasteners (a fastener is not considered missing if there is an empty hole in the device but no corresponding hole in the frame or vice versa).

(b) Mounting surface cracks extending from point of attachment (e.g., cracks in the frame at mounting bolt holes).

(c) Loose mounting.

(d) Frame cross member providing pintle hook attachment cracked.

(2) Integrity.

(a) Cracks anywhere in pintle hook assembly.

(b) Any welded repairs to the pintle hook.

(c) Any part of the horn section reduced by more than 20%.

(d) Latch insecure.

c. *Drawbar/Towbar Eye.*

(1) Mounting.

(a) Any cracks in attachment welds.

(b) Any missing or ineffective fasteners.

(2) Integrity.

(a) Any cracks.

(b) Any part of the eye reduced by more than 20%.

d. *Drawbar/Towbar Tongue.*

(1) Slider (power or manual).

(a) Ineffective latching mechanism

(b) Missing or ineffective stop.

(c) Movement of more than ¼ inch between slider and housing.

(d) Any leaking, air or hydraulic cylinders, hoses, or chambers (other than slight oil weeping normal with hydraulic seals).

(2) Integrity.

(a) Any cracks.

(b) Movement of ¼ inch between subframe and drawbar at point of attachment.

e. *Safety Devices.*

(1) Safety devices missing.

(2) Unattached or incapable of secure attachment.

(3) Chains and hooks.

(a) Worn to the extent of a measurable reduction in link cross section.

(b) Improper repairs including welding, wire, small bolts, rope and tape.

(4) Cable.

(a) Kinked or broken cable strands.

(b) Improper clamps or clamping.

f. *Saddle-Mounts.*

(1) Method of attachment.

(a) Any missing or ineffective fasteners.

(b) Loose mountings.

(c) Any cracks or breaks in a stress or load bearing member.

(d) Horizontal movement between upper and lower saddle-mount halves exceeds ¼ inch.

3. *Exhaust System.*

a. Any exhaust system determined to be leaking at a point forward of or directly below the driver/sleeper compartment.

b. A bus exhaust system leaking or discharging to the atmosphere:

(1) Gasoline powered—excess of 6 inches forward of the rearmost part of the bus.

(2) Other than gasoline powered—in excess of 15 inches forward of the rearmost part of the bus.

(3) Other than gasoline powered—forward of a door or window designed to be opened. (exception: Emergency exits).

c. No part of the exhaust system of any motor vehicle shall be so located as would be likely to result in burning, charring, or damaging the electrical wiring, the fuel supply, or any combustible part of the motor vehicle.

4. *Fuel System.*

a. A fuel system with a visable leak at any point.

b. A fuel tank filler cap missing.

c. A fuel tank not securely attached to the motor vehicle by reason of loose, broken or missing mounting bolts or brackets (some

fuel tanks use springs or rubber bushings to permit movement).

5. *Lighting Devices.* All lighting devices and reflectors required by Section 393 shall be operable.

6. *Safe Loading.*

a. Part(s) of vehicle or condition of loading such that the spare tire or any part of the load or dunnage can fall onto the roadway.

b. Protection Against Shifting Cargo—Any vehicle without a front-end structure or equivalent device as required.

7. *Steering Mechanism.*

a. *Steering Wheel Free Play (on vehicles equipped with power steering the engine must be running).*

Steering wheel diameter	Manual steering system	Power steering system
16″	2″	4½″
18″	2¼″	4¾″
20″	2½″	5¼″
22″	2¾″	5¾″

b. *Steering Column.*

(1) Any absence or looseness of U-bolt(s) or positioning part(s).

(2) Worn, faulty or obviously repair welded universal joint(s).

(3) Steering wheel not properly secured.

c. *Front Axle Beam and All Steering Components Other Than Steering Column.*

(1) Any crack(s).

(2) Any obvious welded repair(s).

d. *Steering Gear Box.*

(1) Any mounting bolt(s) loose or missing.

(2) Any crack(s) in gear box or mounting brackets.

e. *Pitman Arm.* Any looseness of the pitman arm on the steering gear output shaft.

f. *Power Steering.* Auxiliary power assist cylinder loose.

g. *Ball and Socket Joints.*

(1) Any movement under steering load of a stud nut.

(2) Any motion, other than rotational, between any linkage member and its attachment point of more than ¼ inch.

h. *Tie Rods and Drag Links.*

(1) Loose clamp(s) or clamp bolt(s) on tie rods or drag links.

(2) Any looseness in any threaded joint.

i. *Nuts.* Nut(s) loose or missing on tie rods, pitman arm, drag link, steering arm or tie rod arm.

j. *Steering System.* Any modification or other condition that interferes with free movement of any steering component.

8. *Suspension.*

a. Any U-bolt(s), spring hanger(s), or other axle positioning part(s) cracked, broken, loose or missing resulting in shifting of an axle from its normal position. (After a turn, lateral axle displacement is normal with some suspensions. Forward or rearward operation in a straight line will cause the axle to return to alignment).

b. *Spring Assembly.*

(1) Any leaves in a leaf spring assembly broken or missing.

(2) Any broken main leaf in a leaf spring assembly. (Includes assembly with more than one main spring).

(3) Coil spring broken.

(4) Rubber spring missing.

(5) One or more leaves displaced in a manner that could result in contact with a tire, rim, brake drum or frame.

(6) Broken torsion bar spring in a torsion bar suspension.

(7) Deflated air suspension, i.e., system failure, leak, etc.

c. *Torque, Radius or Tracking Components.* Any part of a torque, radius or tracking component assembly or any part used for attaching the same to the vehicle frame or axle that is cracked, loose, broken or missing. (Does not apply to loose bushings in torque or track rods.)

9. *Frame.*

a. *Frame Members.*

(1) Any cracked, broken, loose, or sagging frame member.

(2) Any loose or missing fasteners including fasteners attaching functional component such as engine, transmission, steering gear, suspension, body parts, and fifth wheel.

b. *Tire and Wheel Clearance.* Any condition, including loading, that causes the body or frame to be in contact with a tire or any part of the wheel assemblies.

c. (1) *Adjustable Axle Assemblies (Sliding Subframes).* Adjustable axle assembly with locking pins missing or not engaged.

10. *Tires.*

a. Any tire on any steering axle of a power unit.

(1) With less than 4/32 inch tread when measured at any point on a major tread groove.

(2) Has body ply or belt material exposed through the tread or sidewall.

(3) Has any tread or sidewall separation.

(4) Has a cut where the ply or belt material is exposed.

(5) Labeled ''Not for Highway Use'' or displaying other marking which would exclude use on steering axle.

(6) A tube-type radial tire without radial tube stem markings. These markings include a red band around the tube stem, the word ''radial'' embossed in metal stems, or the word ''radial'' molded in rubber stems.

(7) Mixing bias and radial tires on the same axle.

(8) Tire flap protrudes through valve slot in rim and touches stem.

(9) Regrooved tire except motor vehicles used solely in urban or suburban service (see exception in 393.75(e).

(10) Boot, blowout patch or other ply repair.

(11) Weight carried exceeds tire load limit. This includes overloaded tire resulting from low air pressure.

(12) Tire is flat or has noticeable (e.g., can be heard or felt) leak.

(13) Any bus equipped with recapped or retreaded tire(s).

(14) So mounted or inflated that it comes in contact with any part of the vehicle.

b. All tires other than those found on the steering axle of a power unit:

(1) Weight carried exceeds tire load limit. This includes overloaded tire resulting from low air pressure.

(2) Tire is flat or has noticeable (e.g., can be heard or felt) leak.

(3) Has body ply or belt material exposed through the tread or sidewall.

(4) Has any tread or sidewall separation.

(5) Has a cut where ply or belt material is exposed.

(6) So mounted or inflated that it comes in contact with any part of the vehicle. (This includes a tire that contacts its mate.)

(7) Is marked ''Not for highway use'' or otherwise marked and having like meaning.

(8) With less than 2/32 inch tread when measured at any point on a major tread groove.

11. *Wheels and Rims.*

a. *Lock or Side Ring.* Bent, broken, cracked, improperly seated, sprung or mismatched ring(s).

b. *Wheels and rims.* Cracked or broken or has elongated bolt holes.

c. *Fasteners (both spoke and disc wheels).* Any loose, missing, broken, cracked, stripped or otherwise ineffective fasteners.

d. *Welds.*

(1) Any cracks in welds attaching disc wheel disc to rim.

(2) Any crack in welds attaching tubeless demountable rim to adapter.

(3) Any welded repair on aluminum wheel(s) on a steering axle.

(4) Any welded repair other than disc to rim attachment on steel disc wheel(s) mounted on the steering axle.

12. *Windshield Glazing.* (Not including a 2 inch border at the top, a 1 inch border at each side and the area below the topmost portion of the steering wheel.) Any crack, discoloration or vision reducing matter except: (1) coloring or tinting applied at time of manufacture; (2) any crack not over ¼ inch wide, if not intersected by any other crack; (3) any damaged area not more than ¾ inch in diameter, if not closer than 3 inches to any other such damaged area; (4) labels, stickers, decalcomania, etc. (see 393.60 for exceptions).

13. *Windshield Wipers.* Any power unit that has an inoperative wiper, or missing or damaged parts that render it ineffective.

COMPARISON OF APPENDIX G, AND THE NEW NORTH AMERICAN UNIFORM DRIVER-VEHICLE INSPECTION PROCEDURE (NORTH AMERICAN COMMERCIAL VEHICLE CRITICAL SAFETY INSPECTION ITEMS AND OUT-OF-SERVICE CRITERIA)

The vehicle portion of the FHWA's North American Uniform Driver-Vehicle Inspection Procedure (NAUD–VIP) requirements, CVSA's North American Commercial Vehicle Critical Safety Inspection Items and Out-Of-Service Criteria and Appendix G of subchapter B are similar documents and follow the same inspection procedures. The same items are required to be inspected by each document. FHWA's and CVSA's out-of-service criteria are intended to be used in random roadside inspections to identify critical vehicle inspection items and provide criteria for placing a vehicle(s) out-of-service. A vehicle(s) is placed out-of-service only when by reason of its mechanical condition or loading it is determined to be so imminently hazardous as to likely cause an accident or breakdown, or when such condition(s) would likely contribute to loss of control of the vehicle(s) by the driver. A certain amount of flexibility is given to the inspecting official whether to place the vehicle out-of-service at the inspection site or if it would be less hazardous to allow the vehicle to proceed to a repair facility for repair. The distance to the repair facility must not exceed 25 miles. The roadside type of inspection, however, does not necessarily mean that a vehicle has to be defect-free in order to continue in service.

In contrast, the Appendix G inspection procedure requires that all items required to be inspected are in proper adjustment, are not defective and function properly prior to the vehicle being placed in service.

DIFFERENCES BETWEEN THE OUT-OF-SERVICE CRITERIA . FHWA'S ANNUAL INSPECTION

1. *Brake System.*

The Appendix G criteria rejects vehicles with any defective brakes, any air leaks, etc. The out-of-service criteria allows 20% defective brakes on non-steering axles and a certain latitude on air leaks before placing a vehicle out-of-service.

2. *Coupling Devices.*

Appendix G rejects vehicles with any fifth wheel mounting fastener missing or ineffective. The out-of-service criteria allows up to 20% missing or ineffective fasteners on frame mountings and pivot bracket mountings and 25% on slider latching fasteners. The out-of-service criteria also allows some latitude on cracked welds.

3. *Exhaust System.*

Appendix G follows Section 393.83 verbatim. The CVSA out-of-service criteria allows vehicles to exhaust forward of the dimensions given in Section 393.83 as long as

the exhaust does not leak or exhaust under the chassis.

4. *Fuel System.*

Same for Appendix G and the out-of-service criteria.

5. *Lighting Devices.*

Appendix G requires all lighting devices required by Section 393 to be operative at all times. The out-of-service criteria only requires one stop light and functioning turn signals on the rear most vehicle of a combination vehicle to be operative at all times. In addition one operative head lamp and tail lamp are required during the hours of darkness.

6. *Safe Loading.*

Same for both Appendix G and the out-of-service criteria.

7. *Steering Mechanism*

Steering lash requirements of Appendix G follows the new requirements of § 393.209.

8. *Suspension*

Appendix G follows the new requirements of § 393.207 which does not allow any broken leaves in a leaf spring assembly. The out-of-service criteria allows up to 25% broken or missing leaves before being placed out-of-service.

9. *Frame*

The out-of-service criteria allows a certain latitude in frame cracks before placing a vehicle out-of-service. Appendix G follows the new requirements of 393.201 which does not allow any frame cracks.

10. *Tires*

Appendix G follows the requirements of 393.75 which requires a tire tread depth of 4/32 inch on power unit steering axles and 2/32 inch on all other axles. The out-of-service criteria only requires 2/32 inch tire tread depth on power unit steering axles and 1/32 inch on all other axles.

11. *Wheel and Rims*

The out-of-service criteria allows a certain amount latitude for wheel and rim cracks and missing or defective fasteners. Appendix G meets the requirements of the new 393.205 which does not allow defective wheels and rims non-effective nuts and bolts.

12. *Windshield Glazing*

The out-of-service criteria places in a restricted service condition any vehicle that has a crack or discoloration in the windshield area lying within the sweep of the wiper on the drivers side and does not address the remaining area of the windshield. Appendix G addresses requirements for the whole windshield as specified in 393.60.

13. *Windshield Wipers*

Appendix G requires windshield wipers to be operative at all times. The out-of-service criteria only requires that the windshield wiper on the driver's side to be inspected during inclement weather.

[53 FR 49411, Dec. 7, 1988; 53 FR 49968, Dec. 12, 1988]

FINDING AIDS

A list of CFR titles, subtitles, chapters, subchapters and parts and an alphabetical list of agencies publishing in the CFR are included in the CFR Index and Finding Aids volume to the Code of Federal Regulations which is published separately and revised annually.

Material Approved for Incorporation by Reference
Table of CFR Titles and Chapters
Alphabetical List of Agencies Appearing in the CFR
List of CFR Sections Affected

Material Approved for Incorporation by Reference

(Revised as of October 1, 1997)

The Director of the Federal Register has approved under 5 U.S.C. 552(a) and 1 CFR Part 51 the incorporation by reference of the following publications. This list contains only those incorporations by reference effective as of the revision date of this volume. Incorporations by reference found within a regulation are effective upon the effective date of that regulation. For more information on incorporation by reference, see the preliminary pages of this volume.

49 CFR (PARTS 200–399)

FEDERAL RAILROAD ADMINISTRATION, DEPARTMENT OF TRANSPORTATION

	49 CFR
American National Standards Institute (ANSI)	
1430 Broadway, New York, NY 10018	
ANSI Z41–1991, American National Standard for Personal Protection-Protective Footwear.	214.115
ANSI Z87.1–1989, Practice for Occupational and Educational Eye and Face Protection.	214.117
ANSI Z89.1–1986, Protective Headwear for Industrial Workers	214.113
American Society for Testing and Materials	
100 Barr Harbor Drive, West Conshohocken, PA, 19428-2959, Telephone (610) 832-9585, FAX (610) 832-9555	
Federal Railroad Administration, Office of the Associate Administrator, Nassif Bldg., 400 Seventh St., SW, Washington, DC 20590	
ASTM C 90–70 Standard Specification for Hollow Load-Bearing Concrete Masonry Units.	Part 223, Appendix A
ASTM C 33–77 Standard Specification for Lightweight Aggregates for Concrete Masonry Units.	Part 223, Appendix A
ASTM D 3953–91 Standard Specification for Strapping, Flat Steel and Seals.	393.7; 393.102
American Society of Mechanical Engineers	
Service Center, 22 Law Drive, P.O. Box 2900, Fairfield, NJ 07007, Telephone (610) 832-9585, FAX (610) 832-9555	
Boiler and Pressure Vessel Code (1971 Ed.):	
Boiler and Pressure Vessel Code (1971 Ed.):	
Section II, Part B, page 123	229.51(a)(1)
Section VIII, Division I	229.51(a)(2)
Association of American Railroads	
1920 L St., NW, Washington, DC 20036	
AAR Code of Rules for cars in interchange, 1979	232.17(b)
AAR Code of Tests, Instruction Pamphlet No. 5039–4, Sup. 1, Single Car Testing Device, 1974.	232.17(a)
AAR Railway Signaling Principles and Practices, Ch. 2: Symbols, Aspects and Indications, 1956.	235.12(b)
Cordage Institute	
350 Lincoln Street, #115, Hingham, MA 02043	
PETRS–2 Polyester Fiber Rope, 3-Strand and 8-Strand Constructions, January, 1993.	393.7; 393.102

49 CFR (PARTS 200–399)—Continued

FEDERAL RAILROAD ADMINISTRATION, DEPARTMENT OF TRANSPORTATION—Continued

	49 CFR
PPRS–2 Polypropylene Fiber Rope, 3-Strand and 8-Strand Constructions, August, 1992.	393.7; 393.102
CRS–1 Polyester/Polypropylene Composite Rope Specifications, Three- and Eight-Strand Standard Construction, May 1979.	393.7; 393.102
NRS–1 Nylon Rope Specifications, Three- and Eight-Strand Standard Construction, May 1979.	393.7; 393.102
C1 Double Braided Nylon Rope Specifications, DBN-January 1984	393.7; 393.102
Illuminating Engineering Society (IES)	
Federal Railroad Administration, Office of the Associate Administrator, Nassif Bldg., 400 Seventh St., SW, Washington, DC 20590	
IES Guide for Calculating the Effective Intensity of Flashing Signal Lights, Nov. 1964.	221.5(h)
National Association of Chain Manufacturers	
P.O. Box 3143, York, PA 17402–0143	
Welded Steel Chain Specifications, June 15, 1990	393.7; 393.102
Underwriters Laboratories, Inc. (UL)	
Available from: Global Engineering Documents, 15 Inverness Way East, Englewood, CO 80112, Telephone (800) 854–7179 or	
Global Engineering Documents, 7730 Carondelet Ave., Suite 470, Clayton, MO 63105, Telephone (800) 854–7179	
UL 912 Highway Emergency Signals, fourth edition, revised July 30, 1979.	393.7; 393.95
Web Sling and Tiedown Association, Inc	
710 East Ogden Avenue, Suite 113, Naperville, IL 60563	
Recommended Standard Specification for Synthetic Web Tiedowns, 1991 edition.	393.7; 393.102
Wire Rope Technical Board	
Wire Rope Technical Committee, P.O. Box 849, Stevensville, MD 21666	
Wire Rope Users Manual, November 1985, second edition	393.7; 393.102

Table of CFR Titles and Chapters

(Revised as of September 30, 1997)

Title 1—General Provisions

I Administrative Committee of the Federal Register (Parts 1—49)
II Office of the Federal Register (Parts 50—299)
IV Miscellaneous Agencies (Parts 400—500)

Title 2—[Reserved]

Title 3—The President

I Executive Office of the President (Parts 100—199)

Title 4—Accounts

I General Accounting Office (Parts 1—99)
II Federal Claims Collection Standards (General Accounting Office—Department of Justice) (Parts 100—299)

Title 5—Administrative Personnel

I Office of Personnel Management (Parts 1—1199)
II Merit Systems Protection Board (Parts 1200—1299)
III Office of Management and Budget (Parts 1300—1399)
IV Advisory Committee on Federal Pay (Parts 1400—1499)
V The International Organizations Employees Loyalty Board (Parts 1500—1599)
VI Federal Retirement Thrift Investment Board (Parts 1600—1699)
VII Advisory Commission on Intergovernmental Relations (Parts 1700—1799)
VIII Office of Special Counsel (Parts 1800—1899)
IX Appalachian Regional Commission (Parts 1900—1999)
XI Armed Forces Retirement Home (Part 2100)
XIV Federal Labor Relations Authority, General Counsel of the Federal Labor Relations Authority and Federal Service Impasses Panel (Parts 2400—2499)
XV Office of Administration, Executive Office of the President (Parts 2500—2599)
XVI Office of Government Ethics (Parts 2600—2699)
XXI Department of the Treasury (Parts 3100—3199)
XXII Federal Deposit Insurance Corporation (Part 3201)
XXIII Department of Energy (Part 3301)

Title 5—Administrative Personnel—Continued

Chap.	
XXIV	Federal Energy Regulatory Commission (Part 3401)
XXVI	Department of Defense (Part 3601)
XXVIII	Department of Justice (Part 3801)
XXIX	Federal Communications Commission (Parts 3900—3999)
XXX	Farm Credit System Insurance Corporation (Parts 4000—4099)
XXXI	Farm Credit Administration (Parts 4100—4199)
XXXIII	Overseas Private Investment Corporation (Part 4301)
XXXV	Office of Personnel Management (Part 4501)
XL	Interstate Commerce Commission (Part 5001)
XLI	Commodity Futures Trading Commission (Part 5101)
XLII	Department of Labor (Part 5201)
XLIII	National Science Foundation (Part 5301)
XLV	Department of Health and Human Services (Part 5501)
XLVI	Postal Rate Commission (Part 5601)
XLVII	Federal Trade Commission (Part 5701)
XLVIII	Nuclear Regulatory Commission (Part 5801)
L	Department of Transportation (Part 6001)
LII	Export-Import Bank of the United States (Part 6201)
LIII	Department of Education (Parts 6300—6399)
LIV	Environmental Protection Agency (Part 6401)
LVII	General Services Administration (Part 6701)
LVIII	Board of Governors of the Federal Reserve System (Part 6801)
LIX	National Aeronautics and Space Administration (Part 6901)
LX	United States Postal Service (Part 7001)
LXI	National Labor Relations Board (Part 7101)
LXII	Equal Employment Opportunity Commission (Part 7201)
LXIII	Inter-American Foundation (Part 7301)
LXV	Department of Housing and Urban Development (Part 7501)
LXVI	National Archives and Records Administration (Part 7601)
LXIX	Tennessee Valley Authority (Part 7901)
LXXI	Consumer Product Safety Commission (Part 8101)
LXXIV	Federal Mine Safety and Health Review Commission (Part 8401)
LXXVI	Federal Retirement Thrift Investment Board (Part 8601)
LXXVII	Office of Management and Budget (Part 8701)

Title 6—[Reserved]

Title 7—Agriculture

SUBTITLE A—Office of the Secretary of Agriculture (Parts 0—26)

SUBTITLE B—Regulations of the Department of Agriculture

I Agricultural Marketing Service (Standards, Inspections, Marketing Practices), Department of Agriculture (Parts 27—209)

II Food and Consumer Service, Department of Agriculture (Parts 210—299)

Title 7—Agriculture—Continued

Chap.	
III	Animal and Plant Health Inspection Service, Department of Agriculture (Parts 300—399)
IV	Federal Crop Insurance Corporation, Department of Agriculture (Parts 400—499)
V	Agricultural Research Service, Department of Agriculture (Parts 500—599)
VI	Natural Resources Conservation Service, Department of Agriculture (Parts 600—699)
VII	Farm Service Agency, Department of Agriculture (Parts 700—799)
VIII	Grain Inspection, Packers and Stockyards Administration (Federal Grain Inspection Service), Department of Agriculture (Parts 800—899)
IX	Agricultural Marketing Service (Marketing Agreements and Orders; Fruits, Vegetables, Nuts), Department of Agriculture (Parts 900—999)
X	Agricultural Marketing Service (Marketing Agreements and Orders; Milk), Department of Agriculture (Parts 1000—1199)
XI	Agricultural Marketing Service (Marketing Agreements and Orders; Miscellaneous Commodities), Department of Agriculture (Parts 1200—1299)
XIII	Northeast Dairy Compact Commission (Parts 1300—1399)
XIV	Commodity Credit Corporation, Department of Agriculture (Parts 1400—1499)
XV	Foreign Agricultural Service, Department of Agriculture (Parts 1500—1599)
XVI	Rural Telephone Bank, Department of Agriculture (Parts 1600—1699)
XVII	Rural Utilities Service, Department of Agriculture (Parts 1700—1799)
XVIII	Rural Housing Service, Rural Business-Cooperative Service, Rural Utilities Service, and Farm Service Agency, Department of Agriculture (Parts 1800—2099)
XXVI	Office of Inspector General, Department of Agriculture (Parts 2600—2699)
XXVII	Office of Information Resources Management, Department of Agriculture (Parts 2700—2799)
XXVIII	Office of Operations, Department of Agriculture (Parts 2800—2899)
XXIX	Office of Energy, Department of Agriculture (Parts 2900—2999)
XXX	Office of the Chief Financial Officer, Department of Agriculture (Parts 3000—3099)
XXXI	Office of Environmental Quality, Department of Agriculture (Parts 3100—3199)
XXXII	[Reserved]
XXXIII	Office of Transportation, Department of Agriculture (Parts 3300—3399)
XXXIV	Cooperative State Research, Education, and Extension Service, Department of Agriculture (Parts 3400—3499)
XXXV	Rural Housing Service, Department of Agriculture (Parts 3500—3599)

Title 7—Agriculture—Continued

Chap.

XXXVI National Agricultural Statistics Service, Department of Agriculture (Parts 3600—3699)

XXXVII Economic Research Service, Department of Agriculture (Parts 3700—3799)

XXXVIII World Agricultural Outlook Board, Department of Agriculture (Parts 3800—3899)

XLI [Reserved]

XLII Rural Business-Cooperative Service and Rural Utilities Service, Department of Agriculture (Parts 4200—4299)

Title 8—Aliens and Nationality

I Immigration and Naturalization Service, Department of Justice (Parts 1—499)

Title 9—Animals and Animal Products

I Animal and Plant Health Inspection Service, Department of Agriculture (Parts 1—199)

II Grain Inspection, Packers and Stockyards Administration (Packers and Stockyards Programs), Department of Agriculture (Parts 200—299)

III Food Safety and Inspection Service, Meat and Poultry Inspection, Department of Agriculture (Parts 300—599)

Title 10—Energy

I Nuclear Regulatory Commission (Parts 0—199)

II Department of Energy (Parts 200—699)

III Department of Energy (Parts 700—999)

X Department of Energy (General Provisions) (Parts 1000—1099)

XI United States Enrichment Corporation (Parts 1100—1199)

XV Office of the Federal Inspector for the Alaska Natural Gas Transportation System (Parts 1500—1599)

XVII Defense Nuclear Facilities Safety Board (Parts 1700—1799)

Title 11—Federal Elections

I Federal Election Commission (Parts 1—9099)

Title 12—Banks and Banking

I Comptroller of the Currency, Department of the Treasury (Parts 1—199)

II Federal Reserve System (Parts 200—299)

III Federal Deposit Insurance Corporation (Parts 300—399)

IV Export-Import Bank of the United States (Parts 400—499)

V Office of Thrift Supervision, Department of the Treasury (Parts 500—599)

VI Farm Credit Administration (Parts 600—699)

VII National Credit Union Administration (Parts 700—799)

Title 12—Banks and Banking—Continued

Chap.

VIII Federal Financing Bank (Parts 800—899)

IX Federal Housing Finance Board (Parts 900—999)

XI Federal Financial Institutions Examination Council (Parts 1100—1199)

XIV Farm Credit System Insurance Corporation (Parts 1400—1499)

XV Thrift Depositor Protection Oversight Board (Parts 1500—1599)

XVII Office of Federal Housing Enterprise Oversight, Department of Housing and Urban Development (Parts 1700-1799)

XVIII Community Development Financial Institutions Fund, Department of the Treasury (Parts 1800—1899)

Title 13—Business Credit and Assistance

I Small Business Administration (Parts 1—199)

III Economic Development Administration, Department of Commerce (Parts 300—399)

Title 14—Aeronautics and Space

I Federal Aviation Administration, Department of Transportation (Parts 1—199)

II Office of the Secretary, Department of Transportation (Aviation Proceedings) (Parts 200—399)

III Commercial Space Transportation, Federal Aviation Administration, Department of Transportation (Parts 400—499)

V National Aeronautics and Space Administration (Parts 1200—1299)

Title 15—Commerce and Foreign Trade

SUBTITLE A—Office of the Secretary of Commerce (Parts 0—29)

SUBTITLE B—Regulations Relating to Commerce and Foreign Trade

I Bureau of the Census, Department of Commerce (Parts 30—199)

II National Institute of Standards and Technology, Department of Commerce (Parts 200—299)

III International Trade Administration, Department of Commerce (Parts 300—399)

IV Foreign-Trade Zones Board, Department of Commerce (Parts 400—499)

VII Bureau of Export Administration, Department of Commerce (Parts 700—799)

VIII Bureau of Economic Analysis, Department of Commerce (Parts 800—899)

IX National Oceanic and Atmospheric Administration, Department of Commerce (Parts 900—999)

XI Technology Administration, Department of Commerce (Parts 1100—1199)

XIII East-West Foreign Trade Board (Parts 1300—1399)

XIV Minority Business Development Agency (Parts 1400—1499)

Title 15—Commerce and Foreign Trade—Continued

Chap.

SUBTITLE C—Regulations Relating to Foreign Trade Agreements

XX Office of the United States Trade Representative (Parts 2000—2099)

SUBTITLE D—Regulations Relating to Telecommunications and Information

XXIII National Telecommunications and Information Administration, Department of Commerce (Parts 2300—2399)

Title 16—Commercial Practices

I Federal Trade Commission (Parts 0—999)

II Consumer Product Safety Commission (Parts 1000—1799)

Title 17—Commodity and Securities Exchanges

I Commodity Futures Trading Commission (Parts 1—199)

II Securities and Exchange Commission (Parts 200—399)

IV Department of the Treasury (Parts 400—499)

Title 18—Conservation of Power and Water Resources

I Federal Energy Regulatory Commission, Department of Energy (Parts 1—399)

III Delaware River Basin Commission (Parts 400—499)

VI Water Resources Council (Parts 700—799)

VIII Susquehanna River Basin Commission (Parts 800—899)

XIII Tennessee Valley Authority (Parts 1300—1399)

Title 19—Customs Duties

I United States Customs Service, Department of the Treasury (Parts 1—199)

II United States International Trade Commission (Parts 200—299)

III International Trade Administration, Department of Commerce (Parts 300—399)

Title 20—Employees' Benefits

I Office of Workers' Compensation Programs, Department of Labor (Parts 1—199)

II Railroad Retirement Board (Parts 200—399)

III Social Security Administration (Parts 400—499)

IV Employees' Compensation Appeals Board, Department of Labor (Parts 500—599)

V Employment and Training Administration, Department of Labor (Parts 600—699)

VI Employment Standards Administration, Department of Labor (Parts 700—799)

VII Benefits Review Board, Department of Labor (Parts 800—899)

VIII Joint Board for the Enrollment of Actuaries (Parts 900—999)

Title 20—Employees' Benefits—Continued

Chap.

IX Office of the Assistant Secretary for Veterans' Employment and Training, Department of Labor (Parts 1000—1099)

Title 21—Food and Drugs

I Food and Drug Administration, Department of Health and Human Services (Parts 1—1299)

II Drug Enforcement Administration, Department of Justice (Parts 1300—1399)

III Office of National Drug Control Policy (Parts 1400—1499)

Title 22—Foreign Relations

I Department of State (Parts 1—199)

II Agency for International Development, International Development Cooperation Agency (Parts 200—299)

III Peace Corps (Parts 300—399)

IV International Joint Commission, United States and Canada (Parts 400—499)

V United States Information Agency (Parts 500—599)

VI United States Arms Control and Disarmament Agency (Parts 600—699)

VII Overseas Private Investment Corporation, International Development Cooperation Agency (Parts 700—799)

IX Foreign Service Grievance Board Regulations (Parts 900—999)

X Inter-American Foundation (Parts 1000—1099)

XI International Boundary and Water Commission, United States and Mexico, United States Section (Parts 1100—1199)

XII United States International Development Cooperation Agency (Parts 1200—1299)

XIII Board for International Broadcasting (Parts 1300—1399)

XIV Foreign Service Labor Relations Board; Federal Labor Relations Authority; General Counsel of the Federal Labor Relations Authority; and the Foreign Service Impasse Disputes Panel (Parts 1400—1499)

XV African Development Foundation (Parts 1500—1599)

XVI Japan-United States Friendship Commission (Parts 1600—1699)

XVII United States Institute of Peace (Parts 1700—1799)

Title 23—Highways

I Federal Highway Administration, Department of Transportation (Parts 1—999)

II National Highway Traffic Safety Administration and Federal Highway Administration, Department of Transportation (Parts 1200—1299)

III National Highway Traffic Safety Administration, Department of Transportation (Parts 1300—1399)

Title 24—Housing and Urban Development

Chap.

SUBTITLE A—Office of the Secretary, Department of Housing and Urban Development (Parts 0—99)

SUBTITLE B—Regulations Relating to Housing and Urban Development

I Office of Assistant Secretary for Equal Opportunity, Department of Housing and Urban Development (Parts 100—199)

II Office of Assistant Secretary for Housing-Federal Housing Commissioner, Department of Housing and Urban Development (Parts 200—299)

III Government National Mortgage Association, Department of Housing and Urban Development (Parts 300—399)

V Office of Assistant Secretary for Community Planning and Development, Department of Housing and Urban Development (Parts 500—599)

VI Office of Assistant Secretary for Community Planning and Development, Department of Housing and Urban Development (Parts 600—699) [Reserved]

VII Office of the Secretary, Department of Housing and Urban Development (Housing Assistance Programs and Public and Indian Housing Programs) (Parts 700—799)

VIII Office of the Assistant Secretary for Housing—Federal Housing Commissioner, Department of Housing and Urban Development (Section 8 Housing Assistance Programs and Section 202 Direct Loan Program) (Parts 800—899)

IX Office of Assistant Secretary for Public and Indian Housing, Department of Housing and Urban Development (Parts 900—999)

X Office of Assistant Secretary for Housing—Federal Housing Commissioner, Department of Housing and Urban Development (Interstate Land Sales Registration Program) (Parts 1700—1799)

XII Office of Inspector General, Department of Housing and Urban Development (Parts 2000—2099)

XX Office of Assistant Secretary for Housing—Federal Housing Commissioner, Department of Housing and Urban Development (Parts 3200—3899)

XXV Neighborhood Reinvestment Corporation (Parts 4100—4199)

Title 25—Indians

I Bureau of Indian Affairs, Department of the Interior (Parts 1—299)

II Indian Arts and Crafts Board, Department of the Interior (Parts 300—399)

III National Indian Gaming Commission, Department of the Interior (Parts 500—599)

IV Office of Navajo and Hopi Indian Relocation (Parts 700—799)

V Bureau of Indian Affairs, Department of the Interior, and Indian Health Service, Department of Health and Human Services (Part 900)

VI Office of the Assistant Secretary-Indian Affairs, Department of the Interior (Part 1001)

Title 25—Indians—Continued

Chap.

VII Office of the Special Trustee for American Indians, Department of the Interior (Part 1200)

Title 26—Internal Revenue

I Internal Revenue Service, Department of the Treasury (Parts 1—799)

Title 27—Alcohol, Tobacco Products and Firearms

I Bureau of Alcohol, Tobacco and Firearms, Department of the Treasury (Parts 1—299)

Title 28—Judicial Administration

I Department of Justice (Parts 0—199)

III Federal Prison Industries, Inc., Department of Justice (Parts 300—399)

V Bureau of Prisons, Department of Justice (Parts 500—599)

VI Offices of Independent Counsel, Department of Justice (Parts 600—699)

VII Office of Independent Counsel (Parts 700—799)

Title 29—Labor

SUBTITLE A—Office of the Secretary of Labor (Parts 0—99)

SUBTITLE B—Regulations Relating to Labor

I National Labor Relations Board (Parts 100—199)

II Office of Labor-Management Standards, Department of Labor (Parts 200—299)

III National Railroad Adjustment Board (Parts 300—399)

IV Office of Labor-Management Standards, Department of Labor (Parts 400—499)

V Wage and Hour Division, Department of Labor (Parts 500—899)

IX Construction Industry Collective Bargaining Commission (Parts 900—999)

X National Mediation Board (Parts 1200—1299)

XII Federal Mediation and Conciliation Service (Parts 1400—1499)

XIV Equal Employment Opportunity Commission (Parts 1600—1699)

XVII Occupational Safety and Health Administration, Department of Labor (Parts 1900—1999)

XX Occupational Safety and Health Review Commission (Parts 2200—2499)

XXV Pension and Welfare Benefits Administration, Department of Labor (Parts 2500—2599)

XXVII Federal Mine Safety and Health Review Commission (Parts 2700—2799)

XL Pension Benefit Guaranty Corporation (Parts 4000—4999)

Title 30—Mineral Resources

Chap.

I Mine Safety and Health Administration, Department of Labor (Parts 1—199)

II Minerals Management Service, Department of the Interior (Parts 200—299)

III Board of Surface Mining and Reclamation Appeals, Department of the Interior (Parts 300—399)

IV Geological Survey, Department of the Interior (Parts 400—499)

VI Bureau of Mines, Department of the Interior (Parts 600—699)

VII Office of Surface Mining Reclamation and Enforcement, Department of the Interior (Parts 700—999)

Title 31—Money and Finance: Treasury

SUBTITLE A—Office of the Secretary of the Treasury (Parts 0—50)

SUBTITLE B—Regulations Relating to Money and Finance

I Monetary Offices, Department of the Treasury (Parts 51—199)

II Fiscal Service, Department of the Treasury (Parts 200—399)

IV Secret Service, Department of the Treasury (Parts 400—499)

V Office of Foreign Assets Control, Department of the Treasury (Parts 500—599)

VI Bureau of Engraving and Printing, Department of the Treasury (Parts 600—699)

VII Federal Law Enforcement Training Center, Department of the Treasury (Parts 700—799)

VIII Office of International Investment, Department of the Treasury (Parts 800—899)

Title 32—National Defense

SUBTITLE A—Department of Defense

I Office of the Secretary of Defense (Parts 1—399)

V Department of the Army (Parts 400—699)

VI Department of the Navy (Parts 700—799)

VII Department of the Air Force (Parts 800—1099)

SUBTITLE B—Other Regulations Relating to National Defense

XII Defense Logistics Agency (Parts 1200—1299)

XVI Selective Service System (Parts 1600—1699)

XIX Central Intelligence Agency (Parts 1900—1999)

XX Information Security Oversight Office, National Archives and Records Administration (Parts 2000—2099)

XXI National Security Council (Parts 2100—2199)

XXIV Office of Science and Technology Policy (Parts 2400—2499)

XXVII Office for Micronesian Status Negotiations (Parts 2700—2799)

XXVIII Office of the Vice President of the United States (Parts 2800—2899)

XXIX Presidential Commission on the Assignment of Women in the Armed Forces (Part 2900)

Title 33—Navigation and Navigable Waters

Chap.

I Coast Guard, Department of Transportation (Parts 1—199)

II Corps of Engineers, Department of the Army (Parts 200—399)

IV Saint Lawrence Seaway Development Corporation, Department of Transportation (Parts 400—499)

Title 34—Education

SUBTITLE A—Office of the Secretary, Department of Education (Parts 1—99)

SUBTITLE B—Regulations of the Offices of the Department of Education

I Office for Civil Rights, Department of Education (Parts 100—199)

II Office of Elementary and Secondary Education, Department of Education (Parts 200—299)

III Office of Special Education and Rehabilitative Services, Department of Education (Parts 300—399)

IV Office of Vocational and Adult Education, Department of Education (Parts 400—499)

V Office of Bilingual Education and Minority Languages Affairs, Department of Education (Parts 500—599)

VI Office of Postsecondary Education, Department of Education (Parts 600—699)

VII Office of Educational Research and Improvement, Department of Education (Parts 700—799)

XI National Institute for Literacy (Parts 1100-1199)

SUBTITLE C—Regulations Relating to Education

XII National Council on Disability (Parts 1200—1299)

Title 35—Panama Canal

I Panama Canal Regulations (Parts 1—299)

Title 36—Parks, Forests, and Public Property

I National Park Service, Department of the Interior (Parts 1—199)

II Forest Service, Department of Agriculture (Parts 200—299)

III Corps of Engineers, Department of the Army (Parts 300—399)

IV American Battle Monuments Commission (Parts 400—499)

V Smithsonian Institution (Parts 500—599)

VII Library of Congress (Parts 700—799)

VIII Advisory Council on Historic Preservation (Parts 800—899)

IX Pennsylvania Avenue Development Corporation (Parts 900—999)

XI Architectural and Transportation Barriers Compliance Board (Parts 1100—1199)

XII National Archives and Records Administration (Parts 1200—1299)

XIV Assassination Records Review Board (Parts 1400-1499)

Title 37—Patents, Trademarks, and Copyrights

Chap.

I Patent and Trademark Office, Department of Commerce (Parts 1—199)

II Copyright Office, Library of Congress (Parts 200—299)

IV Assistant Secretary for Technology Policy, Department of Commerce (Parts 400—499)

V Under Secretary for Technology, Department of Commerce (Parts 500—599)

Title 38—Pensions, Bonuses, and Veterans' Relief

I Department of Veterans Affairs (Parts 0—99)

Title 39—Postal Service

I United States Postal Service (Parts 1—999)

III Postal Rate Commission (Parts 3000—3099)

Title 40—Protection of Environment

I Environmental Protection Agency (Parts 1—799)

V Council on Environmental Quality (Parts 1500—1599)

Title 41—Public Contracts and Property Management

SUBTITLE B—Other Provisions Relating to Public Contracts

50 Public Contracts, Department of Labor (Parts 50–1—50–999)

51 Committee for Purchase From People Who Are Blind or Severely Disabled (Parts 51–1—51–99)

60 Office of Federal Contract Compliance Programs, Equal Employment Opportunity, Department of Labor (Parts 60–1—60–999)

61 Office of the Assistant Secretary for Veterans Employment and Training, Department of Labor (Parts 61–1—61–999)

SUBTITLE C—Federal Property Management Regulations System

101 Federal Property Management Regulations (Parts 101–1—101–99)

105 General Services Administration (Parts 105–1—105–999)

109 Department of Energy Property Management Regulations (Parts 109–1—109–99)

114 Department of the Interior (Parts 114–1—114–99)

115 Environmental Protection Agency (Parts 115–1—115–99)

128 Department of Justice (Parts 128–1—128–99)

SUBTITLE D—Other Provisions Relating to Property Management [Reserved]

SUBTITLE E—Federal Information Resources Management Regulations System

201 Federal Information Resources Management Regulation (Parts 201–1—201–99) [Reserved]

SUBTITLE F—Federal Travel Regulation System

301 Travel Allowances (Parts 301–1—301–99)

302 Relocation Allowances (Parts 302–1—302–99)

Title 41—Public Contracts and Property Management—Continued

Chap.

303 Payment of Expenses Connected with the Death of Certain Employees (Parts 303–1—303–2)

304 Payment from a Non-Federal Source for Travel Expenses (Parts 304–1—304–99)

Title 42—Public Health

I Public Health Service, Department of Health and Human Services (Parts 1—199)

IV Health Care Financing Administration, Department of Health and Human Services (Parts 400—499)

V Office of Inspector General-Health Care, Department of Health and Human Services (Parts 1000—1999)

Title 43—Public Lands: Interior

SUBTITLE A—Office of the Secretary of the Interior (Parts 1—199)

SUBTITLE B—Regulations Relating to Public Lands

I Bureau of Reclamation, Department of the Interior (Parts 200—499)

II Bureau of Land Management, Department of the Interior (Parts 1000—9999)

III Utah Reclamation Mitigation and Conservation Commission (Parts 10000—10005)

Title 44—Emergency Management and Assistance

I Federal Emergency Management Agency (Parts 0—399)

IV Department of Commerce and Department of Transportation (Parts 400—499)

Title 45—Public Welfare

SUBTITLE A—Department of Health and Human Services (Parts 1—199)

SUBTITLE B—Regulations Relating to Public Welfare

II Office of Family Assistance (Assistance Programs), Administration for Children and Families, Department of Health and Human Services (Parts 200—299)

III Office of Child Support Enforcement (Child Support Enforcement Program), Administration for Children and Families, Department of Health and Human Services (Parts 300—399)

IV Office of Refugee Resettlement, Administration for Children and Families Department of Health and Human Services (Parts 400—499)

V Foreign Claims Settlement Commission of the United States, Department of Justice (Parts 500—599)

VI National Science Foundation (Parts 600—699)

VII Commission on Civil Rights (Parts 700—799)

VIII Office of Personnel Management (Parts 800—899)

Title 45—Public Welfare—Continued

Chap.

X Office of Community Services, Administration for Children and Families, Department of Health and Human Services (Parts 1000—1099)

XI National Foundation on the Arts and the Humanities (Parts 1100—1199)

XII ACTION (Parts 1200—1299)

XIII Office of Human Development Services, Department of Health and Human Services (Parts 1300—1399)

XVI Legal Services Corporation (Parts 1600—1699)

XVII National Commission on Libraries and Information Science (Parts 1700—1799)

XVIII Harry S. Truman Scholarship Foundation (Parts 1800—1899)

XXI Commission on Fine Arts (Parts 2100—2199)

XXII Christopher Columbus Quincentenary Jubilee Commission (Parts 2200—2299)

XXIII Arctic Research Commission (Part 2301)

XXIV James Madison Memorial Fellowship Foundation (Parts 2400—2499)

XXV Corporation for National and Community Service (Parts 2500—2599)

Title 46—Shipping

I Coast Guard, Department of Transportation (Parts 1—199)

II Maritime Administration, Department of Transportation (Parts 200—399)

IV Federal Maritime Commission (Parts 500—599)

Title 47—Telecommunication

I Federal Communications Commission (Parts 0—199)

II Office of Science and Technology Policy and National Security Council (Parts 200—299)

III National Telecommunications and Information Administration, Department of Commerce (Parts 300—399)

Title 48—Federal Acquisition Regulations System

1 Federal Acquisition Regulation (Parts 1—99)

2 Department of Defense (Parts 200—299)

3 Department of Health and Human Services (Parts 300—399)

4 Department of Agriculture (Parts 400—499)

5 General Services Administration (Parts 500—599)

6 Department of State (Parts 600—699)

7 United States Agency for International Development (Parts 700—799)

8 Department of Veterans Affairs (Parts 800—899)

9 Department of Energy (Parts 900—999)

10 Department of the Treasury (Parts 1000—1099)

Title 48—Federal Acquisition Regulations System—Continued

Chap.

12 Department of Transportation (Parts 1200—1299)

13 Department of Commerce (Parts 1300—1399)

14 Department of the Interior (Parts 1400—1499)

15 Environmental Protection Agency (Parts 1500—1599)

16 Office of Personnel Management Federal Employees Health Benefits Acquisition Regulation (Parts 1600—1699)

17 Office of Personnel Management (Parts 1700—1799)

18 National Aeronautics and Space Administration (Parts 1800—1899)

19 United States Information Agency (Parts 1900—1999)

20 Nuclear Regulatory Commission (Parts 2000—2099)

21 Office of Personnel Management, Federal Employees Group Life Insurance Federal Acquisition Regulation (Parts 2100—2199)

23 Social Security Administration (Parts 2300—2399)

24 Department of Housing and Urban Development (Parts 2400—2499)

25 National Science Foundation (Parts 2500—2599)

28 Department of Justice (Parts 2800—2899)

29 Department of Labor (Parts 2900—2999)

34 Department of Education Acquisition Regulation (Parts 3400—3499)

35 Panama Canal Commission (Parts 3500—3599)

44 Federal Emergency Management Agency (Parts 4400—4499)

51 Department of the Army Acquisition Regulations (Parts 5100—5199)

52 Department of the Navy Acquisition Regulations (Parts 5200—5299)

53 Department of the Air Force Federal Acquisition Regulation Supplement (Parts 5300—5399)

54 Defense Logistics Agency, Department of Defense (Part 5452)

57 African Development Foundation (Parts 5700—5799)

61 General Services Administration Board of Contract Appeals (Parts 6100—6199)

63 Department of Transportation Board of Contract Appeals (Parts 6300—6399)

99 Cost Accounting Standards Board, Office of Federal Procurement Policy, Office of Management and Budget (Parts 9900—9999)

Title 49—Transportation

SUBTITLE A—Office of the Secretary of Transportation (Parts 1—99)

SUBTITLE B—Other Regulations Relating to Transportation

I Research and Special Programs Administration, Department of Transportation (Parts 100—199)

II Federal Railroad Administration, Department of Transportation (Parts 200—299)

Title 49—Transportation—Continued

Chap.

III Federal Highway Administration, Department of Transportation (Parts 300—399)

IV Coast Guard, Department of Transportation (Parts 400—499)

V National Highway Traffic Safety Administration, Department of Transportation (Parts 500—599)

VI Federal Transit Administration, Department of Transportation (Parts 600—699)

VII National Railroad Passenger Corporation (AMTRAK) (Parts 700—799)

VIII National Transportation Safety Board (Parts 800—999)

X Surface Transportation Board, Department of Transportation (Parts 1000—1399)

Title 50—Wildlife and Fisheries

I United States Fish and Wildlife Service, Department of the Interior (Parts 1—199)

II National Marine Fisheries Service, National Oceanic and Atmospheric Administration, Department of Commerce (Parts 200—299)

III International Fishing and Related Activities (Parts 300—399)

IV Joint Regulations (United States Fish and Wildlife Service, Department of the Interior and National Marine Fisheries Service, National Oceanic and Atmospheric Administration, Department of Commerce); Endangered Species Committee Regulations (Parts 400—499)

V Marine Mammal Commission (Parts 500—599)

VI Fishery Conservation and Management, National Oceanic and Atmospheric Administration, Department of Commerce (Parts 600—699)

CFR Index and Finding Aids

Subject/Agency Index

List of Agency Prepared Indexes

Parallel Tables of Statutory Authorities and Rules

Acts Requiring Publication in the Federal Register

List of CFR Titles, Chapters, Subchapters, and Parts

Alphabetical List of Agencies Appearing in the CFR

Alphabetical List of Agencies Appearing in the CFR

(Revised as of September 30, 1997)

Agency	CFR Title, Subtitle or Chapter
ACTION	45, XII
Administrative Committee of the Federal Register	1, I
Advanced Research Projects Agency	32, I
Advisory Commission on Intergovernmental Relations	5, VII
Advisory Committee on Federal Pay	5, IV
Advisory Council on Historic Preservation	36, VIII
African Development Foundation	22, XV
Federal Acquisition Regulation	48, 57
Agency for International Development, United States	22, II
Federal Acquisition Regulation	48, 7
Agricultural Marketing Service	7, I, IX, X, XI
Agricultural Research Service	7, V
Agriculture Department	
Agricultural Marketing Service	7, I, IX, X, XI
Agricultural Research Service	7, V
Animal and Plant Health Inspection Service	7, III; 9, I
Chief Financial Officer, Office of	7, XXX
Commodity Credit Corporation	7, XIV
Cooperative State Research, Education, and Extension Service	7, XXXIV
Economic Research Service	7, XXXVII
Energy, Office of	7, XXIX
Environmental Quality, Office of	7, XXXI
Farm Service Agency	7, VII, XVIII
Federal Acquisition Regulation	48, 4
Federal Crop Insurance Corporation	7, IV
Food and Consumer Service	7, II
Food Safety and Inspection Service	9, III
Foreign Agricultural Service	7, XV
Forest Service	36, II
Grain Inspection, Packers and Stockyards Administration	7, VIII; 9, II
Information Resources Management, Office of	7, XXVII
Inspector General, Office of	7, XXVI
National Agricultural Library	7, XLI
National Agricultural Statistics Service	7, XXXVI
Natural Resources Conservation Service	7, VI
Operations, Office of	7, XXVIII
Rural Business-Cooperative Service	7, XVIII, XLII
Rural Development Administration	7, XLII
Rural Housing Service	7, XVIII, XXXV
Rural Telephone Bank	7, XVI
Rural Utilities Service	7, XVII, XVIII, XLII
Secretary of Agriculture, Office of	7, Subtitle A
Transportation, Office of	7, XXXIII
World Agricultural Outlook Board	7, XXXVIII
Air Force Department	32, VII
Federal Acquisition Regulation Supplement	48, 53
Alaska Natural Gas Transportation System, Office of the Federal Inspector	10, XV
Alcohol, Tobacco and Firearms, Bureau of	27, I
AMTRAK	49, VII
American Battle Monuments Commission	36, IV
American Indians, Office of the Special Trustee	25, VII

Agency	CFR Title, Subtitle or Chapter
Animal and Plant Health Inspection Service	7, III; 9, I
Appalachian Regional Commission	5, IX
Architectural and Transportation Barriers Compliance Board	36, XI
Arctic Research Commission	45, XXIII
Armed Forces Retirement Home	5, XI
Arms Control and Disarmament Agency, United States	22, VI
Army Department	32, V
Engineers, Corps of	33, II; 36, III
Federal Acquisition Regulation	48, 51
Assassination Records Review Board	36, XIV
Benefits Review Board	20, VII
Bilingual Education and Minority Languages Affairs, Office of	34, V
Blind or Severely Disabled, Committee for Purchase From People Who Are	41, 51
Board for International Broadcasting	22, XIII
Census Bureau	15, I
Central Intelligence Agency	32, XIX
Chief Financial Officer, Office of	7, XXX
Child Support Enforcement, Office of	45, III
Children and Families, Administration for	45, II, III, IV, X
Christopher Columbus Quincentenary Jubilee Commission	45, XXII
Civil Rights, Commission on	45, VII
Civil Rights, Office for	34, I
Coast Guard	33, I; 46, I; 49, IV
Commerce Department	44, IV
Census Bureau	15, I‘
Economic Affairs, Under Secretary	37, V
Economic Analysis, Bureau of	15, VIII
Economic Development Administration	13, III
Emergency Management and Assistance	44, IV
Export Administration, Bureau of	15, VII
Federal Acquisition Regulation	48, 13
Fishery Conservation and Management	50, VI
Foreign-Trade Zones Board	15, IV
International Trade Administration	15, III; 19, III
National Institute of Standards and Technology	15, II
National Marine Fisheries Service	50, II, IV
National Oceanic and Atmospheric Administration	15, IX; 50, II, III, IV, VI
National Telecommunications and Information Administration	15, XXIII; 47, III
National Weather Service	15, IX
Patent and Trademark Office	37, I
Productivity, Technology and Innovation, Assistant Secretary for	37, IV
Secretary of Commerce, Office of	15, Subtitle A
Technology, Under Secretary for	37, V
Technology Administration	15, XI
Technology Policy, Assistant Secretary for	37, IV
Commercial Space Transportation	14, III
Commodity Credit Corporation	7, XIV
Commodity Futures Trading Commission	5, XLI; 17, I
Community Planning and Development, Office of Assistant Secretary for	24, V, VI
Community Services, Office of	45, X
Comptroller of the Currency	12, I
Construction Industry Collective Bargaining Commission	29, IX
Consumer Product Safety Commission	5, LXXI; 16, II
Cooperative State Research, Education, and Extension Service	7, XXXIV
Copyright Office	37, II
Cost Accounting Standards Board	48, 99
Council on Environmental Quality	40, V
Customs Service, United States	19, I
Defense Contract Audit Agency	32, I
Defense Department	5, XXVI; 32, Subtitle A
Advanced Research Projects Agency	32, I
Air Force Department	32, VII

Agency	CFR Title, Subtitle or Chapter
Army Department	32, V; 33, II; 36, III, 48, 51
Defense Intelligence Agency	32, I
Defense Logistics Agency	32, I, XII; 48, 54
Defense Mapping Agency	32, I
Engineers, Corps of	33, II; 36, III
Federal Acquisition Regulation	48, 2
Navy Department	32, VI; 48, 52
Secretary of Defense, Office of	32, I
Defense Contract Audit Agency	32, I
Defense Intelligence Agency	32, I
Defense Logistics Agency	32, XII; 48, 54
Defense Mapping Agency	32, I
Defense Nuclear Facilities Safety Board	10, XVII
Delaware River Basin Commission	18, III
Drug Enforcement Administration	21, II
East-West Foreign Trade Board	15, XIII
Economic Affairs, Under Secretary	37, V
Economic Analysis, Bureau of	15, VIII
Economic Development Administration	13, III
Economic Research Service	7, XXXVII
Education, Department of	5, LIII
Bilingual Education and Minority Languages Affairs, Office of	34, V
Civil Rights, Office for	34, I
Educational Research and Improvement, Office of	34, VII
Elementary and Secondary Education, Office of	34, II
Federal Acquisition Regulation	48, 34
Postsecondary Education, Office of	34, VI
Secretary of Education, Office of	34, Subtitle A
Special Education and Rehabilitative Services, Office of	34, III
Vocational and Adult Education, Office of	34, IV
Educational Research and Improvement, Office of	34, VII
Elementary and Secondary Education, Office of	34, II
Employees' Compensation Appeals Board	20, IV
Employees Loyalty Board	5, V
Employment and Training Administration	20, V
Employment Standards Administration	20, VI
Endangered Species Committee	50, IV
Energy, Department of	5, XXIII; 10, II, III, X
Federal Acquisition Regulation	48, 9
Federal Energy Regulatory Commission	5, XXIV; 18, I
Property Management Regulations	41, 109
Energy, Office of	7, XXIX
Engineers, Corps of	33, II; 36, III
Engraving and Printing, Bureau of	31, VI
Enrichment Corporation, United States	10, XI
Environmental Protection Agency	5, LIV; 40, I
Federal Acquisition Regulation	48, 15
Property Management Regulations	41, 115
Environmental Quality, Office of	7, XXXI
Equal Employment Opportunity Commission	5, LXII; 29, XIV
Equal Opportunity, Office of Assistant Secretary for	24, I
Executive Office of the President	3, I
Administration, Office of	5, XV
Environmental Quality, Council on	40, V
Management and Budget, Office of	25, III, LXXVII; 48, 99
National Drug Control Policy, Office of	21, III
National Security Council	32, XXI; 47, 2
Presidential Documents	3
Science and Technology Policy, Office of	32, XXIV; 47, II
Trade Representative, Office of the United States	15, XX
Export Administration, Bureau of	15, VII
Export-Import Bank of the United States	5, LII; 12, IV
Family Assistance, Office of	45, II
Farm Credit Administration	5, XXXI; 12, VI
Farm Credit System Insurance Corporation	5, XXX; 12, XIV

Agency	CFR Title, Subtitle or Chapter
Farm Service Agency	7, VII, XVIII
Federal Acquisition Regulation	48, 1
Federal Aviation Administration	14, I
Commercial Space Transportation	14, III
Federal Claims Collection Standards	4, II
Federal Communications Commission	5, XXIX; 47, I
Federal Contract Compliance Programs, Office of	41, 60
Federal Crop Insurance Corporation	7, IV
Federal Deposit Insurance Corporation	5, XXII; 12, III
Federal Election Commission	11, I
Federal Emergency Management Agency	44, I
Federal Acquisition Regulation	48, 44
Federal Employees Group Life Insurance Federal Acquisition Regulation	48, 21
Federal Employees Health Benefits Acquisition Regulation	48, 16
Federal Energy Regulatory Commission	5, XXIV; 18, I
Federal Financial Institutions Examination Council	12, XI
Federal Financing Bank	12, VIII
Federal Highway Administration	23, I, II; 49, III
Federal Home Loan Mortgage Corporation	1, IV
Federal Housing Enterprise Oversight Office	12, XVII
Federal Housing Finance Board	12, IX
Federal Inspector for the Alaska Natural Gas Transportation System, Office of	10, XV
Federal Labor Relations Authority, and General Counsel of the Federal Labor Relations Authority	5, XIV; 22, XIV
Federal Law Enforcement Training Center	31, VII
Federal Maritime Commission	46, IV
Federal Mediation and Conciliation Service	29, XII
Federal Mine Safety and Health Review Commission	5, LXXIV; 29, XXVII
Federal Pay, Advisory Committee on	5, IV
Federal Prison Industries, Inc.	28, III
Federal Procurement Policy Office	48, 99
Federal Property Management Regulations	41, 101
Federal Property Management Regulations System	41, Subtitle C
Federal Railroad Administration	49, II
Federal Register, Administrative Committee of	1, I
Federal Register, Office of	1, II
Federal Reserve System	12, II
Board of Governors	5, LVIII
Federal Retirement Thrift Investment Board	5, VI, LXXVI
Federal Service Impasses Panel	5, XIV
Federal Trade Commission	5, XLVII; 16, I
Federal Transit Administration	49, VI
Federal Travel Regulation System	41, Subtitle F
Fine Arts, Commission on	45, XXI
Fiscal Service	31, II
Fish and Wildlife Service, United States	50, I, IV
Fishery Conservation and Management	50, VI
Food and Drug Administration	21, I
Food and Consumer Service	7, II
Food Safety and Inspection Service	9, III
Foreign Agricultural Service	7, XV
Foreign Assets Control, Office of	31, V
Foreign Claims Settlement Commission of the United States	45, V
Foreign Service Grievance Board	22, IX
Foreign Service Impasse Disputes Panel	22, XIV
Foreign Service Labor Relations Board	22, XIV
Foreign-Trade Zones Board	15, IV
Forest Service	36, II
General Accounting Office	4, I, II
General Services Administration	5, LVII
Contract Appeals, Board of	48, 61
Federal Acquisition Regulation	48, 5
Federal Property Management Regulations System	41, 101, 105
Federal Travel Regulation System	41, Subtitle F
Payment From a Non-Federal Source for Travel Expenses	41, 304

Agency	CFR Title, Subtitle or Chapter
Payment of Expenses Connected With the Death of Certain Employees	41, 303
Relocation Allowances	41, 302
Travel Allowances	41, 301
Geological Survey	30, IV
Government Ethics, Office of	5, XVI
Government National Mortgage Association	24, III
Grain Inspection, Packers and Stockyards Administration	7, VIII; 9, II
Great Lakes Pilotage	46, III
Harry S. Truman Scholarship Foundation	45, XVIII
Health and Human Services, Department of	5, XLV; 45, Subtitle A
Child Support Enforcement, Office of	45, III
Children and Families, Administration for	45, II, III, IV, X
Community Services, Office of	45, X
Family Assistance, Office of	45, II
Federal Acquisition Regulation	48, 3
Food and Drug Administration	21, I
Health Care Financing Administration	42, IV
Human Development Services, Office of	45, XIII
Indian Health Service	25, V
Inspector General (Health Care), Office of	42, V
Public Health Service	42, I
Refugee Resettlement, Office of	45, IV
Health Care Financing Administration	42, IV
Housing and Urban Development, Department of	5, LXV; 24, Subtitle B
Community Planning and Development, Office of Assistant Secretary for	24, V, VI
Equal Opportunity, Office of Assistant Secretary for	24, I
Federal Acquisition Regulation	48, 24
Federal Housing Enterprise Oversight, Office of	12, XVII
Government National Mortgage Association	24, III
Housing—Federal Housing Commissioner, Office of Assistant Secretary for	24, II, VIII, X, XX
Inspector General, Office of	24, XII
Public and Indian Housing, Office of Assistant Secretary for	24, IX
Secretary, Office of	24, Subtitle A, VII
Housing—Federal Housing Commissioner, Office of Assistant Secretary for	24, II, VIII, X, XX
Human Development Services, Office of	45, XIII
Immigration and Naturalization Service	8, I
Independent Counsel, Office of	28, VII
Indian Affairs, Bureau of	25, I, V
Indian Affairs, Office of the Assistant Secretary	25, VI
Indian Arts and Crafts Board	25, II
Indian Health Service	25, V
Information Agency, United States	22, V
Federal Acquisition Regulation	48, 19
Information Resources Management, Office of	7, XXVII
Information Security Oversight Office, National Archives and Records Administration	32, XX
Inspector General	
Agriculture Department	7, XXVI
Health and Human Services Department	42, V
Housing and Urban Development Department	24, XII
Institute of Peace, United States	22, XVII
Inter-American Foundation	5, LXIII; 22, X
Intergovernmental Relations, Advisory Commission on	5, VII
Interior Department	
American Indians, Office of the Special Trustee	25, VII
Endangered Species Committee	50, IV
Federal Acquisition Regulation	48, 14
Federal Property Management Regulations System	41, 114
Fish and Wildlife Service, United States	50, I, IV
Geological Survey	30, IV
Indian Affairs, Bureau of	25, I, V
Indian Affairs, Office of the Assistant Secretary	25, VI
Indian Arts and Crafts Board	25, II

Agency	CFR Title, Subtitle or Chapter
Land Management, Bureau of	43, II
Minerals Management Service	30, II
Mines, Bureau of	30, VI
National Indian Gaming Commission	25, III
National Park Service	36, I
Reclamation, Bureau of	43, I
Secretary of the Interior, Office of	43, Subtitle A
Surface Mining and Reclamation Appeals, Board of	30, III
Surface Mining Reclamation and Enforcement, Office of	30, VII
Internal Revenue Service	26, I
International Boundary and Water Commission, United States and Mexico, United States Section	22, XI
International Development, United States Agency for	22, II
Federal Acquisition Regulation	48, 7
International Development Cooperation Agency, United States	22, XII
International Development, United States Agency for	22, II; 48, 7
Overseas Private Investment Corporation	5, XXXIII; 22, VII
International Fishing and Related Activities	50, III
International Investment, Office of	31, VIII
International Joint Commission, United States and Canada	22, IV
International Organizations Employees Loyalty Board	5, V
International Trade Administration	15, III; 19, III
International Trade Commission, United States	19, II
Interstate Commerce Commission	5, XL
James Madison Memorial Fellowship Foundation	45, XXIV
Japan–United States Friendship Commission	22, XVI
Joint Board for the Enrollment of Actuaries	20, VIII
Justice Department	5, XXVIII; 28, I
Drug Enforcement Administration	21, II
Federal Acquisition Regulation	48, 28
Federal Claims Collection Standards	4, II
Federal Prison Industries, Inc.	28, III
Foreign Claims Settlement Commission of the United States	45, V
Immigration and Naturalization Service	8, I
Offices of Independent Counsel	28, VI
Prisons, Bureau of	28, V
Property Management Regulations	41, 128
Labor Department	5, XLII
Benefits Review Board	20, VII
Employees' Compensation Appeals Board	20, IV
Employment and Training Administration	20, V
Employment Standards Administration	20, VI
Federal Acquisition Regulation	48, 29
Federal Contract Compliance Programs, Office of	41, 60
Federal Procurement Regulations System	41, 50
Labor-Management Standards, Office of	29, II, IV
Mine Safety and Health Administration	30, I
Occupational Safety and Health Administration	29, XVII
Pension and Welfare Benefits Administration	29, XXV
Public Contracts	41, 50
Secretary of Labor, Office of	29, Subtitle A
Veterans' Employment and Training, Office of the Assistant Secretary for	41, 61; 20, IX
Wage and Hour Division	29, V
Workers' Compensation Programs, Office of	20, I
Labor-Management Standards, Office of	29, II, IV
Land Management, Bureau of	43, II
Legal Services Corporation	45, XVI
Library of Congress	36, VII
Copyright Office	37, II
Management and Budget, Office of	5, III, LXXVII; 48, 99
Marine Mammal Commission	50, V
Maritime Administration	46, II
Merit Systems Protection Board	5, II
Micronesian Status Negotiations, Office for	32, XXVII

Agency	CFR Title, Subtitle or Chapter
Mine Safety and Health Administration	30, I
Minerals Management Service	30, II
Mines, Bureau of	30, VI
Minority Business Development Agency	15, XIV
Miscellaneous Agencies	1, IV
Monetary Offices	31, I
National Aeronautics and Space Administration	5, LIX; 14, V
Federal Acquisition Regulation	48, 18
National Agricultural Library	7, XLI
National Agricultural Statistics Service	7, XXXVI
National Archives and Records Administration	5, LXVI; 36, XII
Information Security Oversight Office	32, XX
National Bureau of Standards	15, II
National Capital Planning Commission	1, IV
National Commission for Employment Policy	1, IV
National Commission on Libraries and Information Science	45, XVII
National and Community Service, Corporation for	45, XXV
National Council on Disability	34, XII
National Credit Union Administration	12, VII
National Drug Control Policy, Office of	21, III
National Foundation on the Arts and the Humanities	45, XI
National Highway Traffic Safety Administration	23, II, III; 49, V
National Indian Gaming Commission	25, III
National Institute for Literacy	34, XI
National Institute of Standards and Technology	15, II
National Labor Relations Board	5, LXI; 29, I
National Marine Fisheries Service	50, II, IV
National Mediation Board	29, X
National Oceanic and Atmospheric Administration	15, IX; 50, II, III, IV, VI
National Park Service	36, I
National Railroad Adjustment Board	29, III
National Railroad Passenger Corporation (AMTRAK)	49, VII
National Science Foundation	5, XLIII; 45, VI
Federal Acquisition Regulation	48, 25
National Security Council	32, XXI
National Security Council and Office of Science and Technology Policy	47, II
National Telecommunications and Information Administration	15, XXIII; 47, III
National Transportation Safety Board	49, VIII
National Weather Service	15, IX
Natural Resources Conservation Service	7, VI
Navajo and Hopi Indian Relocation, Office of	25, IV
Navy Department	32, VI
Federal Acquisition Regulation	48, 52
Neighborhood Reinvestment Corporation	24, XXV
Northeast Dairy Compact Commission	7, XIII
Nuclear Regulatory Commission	5, XLVIII; 10, I
Federal Acquisition Regulation	48, 20
Occupational Safety and Health Administration	29, XVII
Occupational Safety and Health Review Commission	29, XX
Offices of Independent Counsel	28, VI
Operations Office	7, XXVIII
Overseas Private Investment Corporation	5, XXXIII; 22, VII
Panama Canal Commission	48, 35
Panama Canal Regulations	35, I
Patent and Trademark Office	37, I
Payment From a Non-Federal Source for Travel Expenses	41, 304
Payment of Expenses Connected With the Death of Certain Employees	41, 303
Peace Corps	22, III
Pennsylvania Avenue Development Corporation	36, IX
Pension and Welfare Benefits Administration	29, XXV
Pension Benefit Guaranty Corporation	29, XL
Personnel Management, Office of	5, I, XXXV; 45, VIII
Federal Acquisition Regulation	48, 17
Federal Employees Group Life Insurance Federal Acquisition Regulation	48, 21

Agency	CFR Title, Subtitle or Chapter
Federal Employees Health Benefits Acquisition Regulation	48, 16
Postal Rate Commission	5, XLVI; 39, III
Postal Service, United States	5, LX; 39, I
Postsecondary Education, Office of	34, VI
President's Commission on White House Fellowships	1, IV
Presidential Commission on the Assignment of Women in the Armed Forces	32, XXIX
Presidential Documents	3
Prisons, Bureau of	28, V
Productivity, Technology and Innovation, Assistant Secretary	37, IV
Public Contracts, Department of Labor	41, 50
Public and Indian Housing, Office of Assistant Secretary for	24, IX
Public Health Service	42, I
Railroad Retirement Board	20, II
Reclamation, Bureau of	43, I
Refugee Resettlement, Office of	45, IV
Regional Action Planning Commissions	13, V
Relocation Allowances	41, 302
Research and Special Programs Administration	49, I
Rural Business-Cooperative Service	7, XVIII, XLII
Rural Development Administration	7, XLII
Rural Housing Service	7, XVIII, XXXV
Rural Telephone Bank	7, XVI
Rural Utilities Service	7, XVII, XVIII, XLII
Saint Lawrence Seaway Development Corporation	33, IV
Science and Technology Policy, Office of	32, XXIV
Science and Technology Policy, Office of, and National Security Council	47, II
Secret Service	31, IV
Securities and Exchange Commission	17, II
Selective Service System	32, XVI
Small Business Administration	13, I
Smithsonian Institution	36, V
Social Security Administration	20, III; 48, 23
Soldiers' and Airmen's Home, United States	5, XI
Special Counsel, Office of	5, VIII
Special Education and Rehabilitative Services, Office of	34, III
State Department	22, I
Federal Acquisition Regulation	48, 6
Surface Mining and Reclamation Appeals, Board of	30, III
Surface Mining Reclamation and Enforcement, Office of	30, VII
Surface Transportation Board	49, X
Susquehanna River Basin Commission	18, VIII
Technology Administration	15, XI
Technology Policy, Assistant Secretary for	37, IV
Technology, Under Secretary for	37, V
Tennessee Valley Authority	5, LXIX; 18, XIII
Thrift Depositor Protection Oversight Board	12, XV
Thrift Supervision Office, Department of the Treasury	12, V
Trade Representative, United States, Office of	15, XX
Transportation, Department of	5, L
Coast Guard	33, I; 46, I; 49, IV
Commercial Space Transportation	14, III
Contract Appeals, Board of	48, 63
Emergency Management and Assistance	44, IV
Federal Acquisition Regulation	48, 12
Federal Aviation Administration	14, I
Federal Highway Administration	23, I, II; 49, III
Federal Railroad Administration	49, II
Federal Transit Administration	49, VI
Maritime Administration	46, II
National Highway Traffic Safety Administration	23, II, III; 49, V
Research and Special Programs Administration	49, I
Saint Lawrence Seaway Development Corporation	33, IV
Secretary of Transportation, Office of	14, II; 49, Subtitle A
Surface Transportation Board	49, X

Agency	CFR Title, Subtitle or Chapter
Transportation, Office of	7, XXXIII
Travel Allowances	41, 301
Treasury Department	5, XXI; 17, IV
Alcohol, Tobacco and Firearms, Bureau of	27, I
Community Development Financial Institutions Fund	12, XVIII
Comptroller of the Currency	12, I
Customs Service, United States	19, I
Engraving and Printing, Bureau of	31, VI
Federal Acquisition Regulation	48, 10
Federal Law Enforcement Training Center	31, VII
Fiscal Service	31, II
Foreign Assets Control, Office of	31, V
Internal Revenue Service	26, I
International Investment, Office of	31, VIII
Monetary Offices	31, I
Secret Service	31, IV
Secretary of the Treasury, Office of	31, Subtitle A
Thrift Supervision, Office of	12, V
Truman, Harry S. Scholarship Foundation	45, XVIII
United States and Canada, International Joint Commission	22, IV
United States and Mexico, International Boundary and Water Commission, United States Section	22, XI
United States Enrichment Corporation	10, XI
Utah Reclamation Mitigation and Conservation Commission	43, III
Veterans Affairs Department	38, I
Federal Acquisition Regulation	48, 8
Veterans' Employment and Training, Office of the Assistant Secretary for	41, 61; 20, IX
Vice President of the United States, Office of	32, XXVIII
Vocational and Adult Education, Office of	34, IV
Wage and Hour Division	29, V
Water Resources Council	18, VI
Workers' Compensation Programs, Office of	20, I
World Agricultural Outlook Board	7, XXXVIII

List of CFR Sections Affected

All changes in this volume of the Code of Federal Regulations which were made by documents published in the FEDERAL REGISTER since January 1, 1986, are enumerated in the following list. Entries indicate the nature of the changes effected. Page numbers refer to FEDERAL REGISTER pages. The user should consult the entries for chapters and parts as well as sections for revisions.

For the period before January 1, 1986, see the ''List of CFR Sections Affected, 1949–1963, 1964–1972, and 1973–1985'' published in seven separate volumes.

1986

49 CFR

51 FR Page

Chapter II

212.221 (a) amendment suspended 757
(a) suspension removed 3975
212.223 New (a)(2) addition suspended 757
(a)(2) suspension removed 3975
217.13 (d) suspended 757
(d) suspension removed 3975
217 Appendix amendment suspended 757
Appendix suspension removed 3975
218 Authority citation revised 25185
218.5 (a) Note revised 25186
219 Addition suspended 757
Suspension removed 3975
219.11 (a) and (f) amended 3975
219.201 (a) amended 3975
219.501 (a) amended 3975
221 Authority citation revised 25185
221.5 (i) added 25185
221.13 Revised 25185
221.14 Redesignated from 221.15 and revised 25185
221.15 Redesignated as 221.14; new 221.15 added 25185
221.16 Added 25185
221 Appendix C revised 25186
225 Authority citation revised 47019
225.5 (b)(2) revised 47019

49 CFR—Continued

51 FR Page

Chapter II—Continued

225.7 (a) revised 47019
225.17 (d) revision suspended 757
(d) suspension removed 3975
225.19 (b) and (c) amended 47019
225 Appendix A revised 47019
232.13 (b), (c)(1), and (d)(1) and (2)(i) revised; (g) and (h) added 17303
232.19 Added 17303

Chapter III

301 Authority citation revised 12620
301.50 Revised 12620
301.60 Revised 12620
387 Authority citation revised 22083
387.5 Amended; interim 33856
387.7 (d)(1) and (2) amended; (d)(3) added; interim 22083
387.15 Amended; interim 33856
388 Authority citation revised 12621
388.4 Revised 12621
388.5 (b) nomenclature change 12621
388.6 Nomenclature change 12621
388.7 Amended 12621
388.8 Revised 12621
389 Authority citation revised 12621
389.1 Revised 12621
389.3 Amended 12621
389.11 Revised 12621
390 Authority citation revised 12621

49 CFR—Continued

51 FR Page

Chapter III—Continued

390.28 Revised 12621
390.40 Introductory text revised 12621
391 Authority citation revised 12621, 17571
391.15 (c)(3)(ii) revised 8200
391.41 (b)(12) revised 17571
391.49 (a), (b), (e)(1) introductory text, (i), and (ii), (g), (h), (i), (j), and (k) nomenclature change 12621
394 Authority citation revised 6125, 12622
394.3 (a)(2) and (3) revised 6125
394.9 (a) revised 6125
(d) amended 12622
395 Authority citation revised 12622
395.8 (k)(2) amended 12622
395.13 (c)(2) amended 12622

1987

49 CFR

52 FR Page

Chapter II

219.5 (b) removed 10575
219.205 (c) and (d) revised 10576
219.211 (a)(1) revised 10576
219 Appendix B added 10576

Chapter III

310 Removed 22474
383 Added 20587
383.37 Introductory text corrected 32926
391.11 (b)(7) revised 20589
391.21 (b)(10) amended; (b)(11) redesignated as (b)(12); new (b)(11) added 20589
391.27 (e) added 20589
392 Authority citation revised 27201
392.5 (c), (d) and (e) added 27201
393 Authority citation revised 2803
393.42 Revised 2803
394.3 (a)(3) revised 7278
395 Authority citation revised 41721
395.1 Revised 41721
(a) introductory text corrected 44520
395.2 (a)(9) added 41721
395.3 (b), (c), and (e) revised 41721

49 CFR—Continued

52 FR Page

Chapter III—Continued

395.8 (d) and (l)(1)(ii) revised; (l)(1) introductory text republished 41721
350—399 (Subchapter B) Appendix D heading revised; Appendix E added 20590

1988

49 CFR

53 FR Page

Chapter II

209 Authority citation revised 28596
Authority citation revised 52920
209.1 Introductory text, (a), (b) and (c) amended 52920
209 Appendix A revised; interim 28596
Appendix A revised 52920
213 Authority citation revised 28598
213.15 (a) revised; interim 28598
(a) designation and (b) removed; section amended 52924
213 Appendix B amended; interim 28599
Appendix B revised 52924
215 Authority citation revised 28599
215.7 Revised; interim 28599
Amended 52925
215 Appendix B amended; interim 28599
Appendix B revised 52925
216 Authority citation revised 28599
Authority citation revised 52927
216.7 Revised; interim 28599
217 Authority citation revised 28599
Authority citation revised 47131
217.5 Revised; interim 28599
Amended 52927
217.13 (d) introductory text revised; (d)(5) added 47131
217 Appendix A amended; interim 28599
Appendix A revised 52927
218 Authority citation revised 28599
218.3 (b)(2) revised; interim 28599
218.9 Revised; interim 28599
Amended 52928
218.41 Revised 52928

49 CFR—Continued

53 FR Page

Chapter II—Continued

218 Appendix A amended; interim 28600
Appendix A revised 52928
219 Authority citation revised 28600
219.3 (a)(2) amended; interim 28600
(c) added 47128
219.9 (d) added; interim 28600
(a)(1) revised; (a)(5) redesignated as (a)(7); (a) introductory text and new (7) republished; (a) (5) and (6) added 47128
(d) amended 52928
219.102 Added 47128
219.601—219.609 (Subpart G) Added 47128
219.701—219.711 (Subpart H) Added 47130
219 Appendix A amended; interim 28600
Appendix A amended 47131
Appendix B revised 47819
Appendix A revised 52928
220 Authority citation revised 28600
220.3 (b)(2) revised; interim 28600
220.7 Revised; interim 28600
Amended 52930
220 Appendix C amended; interim 28600
Appendix C revised 52930
221 Authority citation revised 28600
221.3 (b)(3) revised; interim 28600
221.7 Revised; interim 28600
Amended 52930
221 Appendix C amended; interim 28600
Appendix C revised 52930
223 Authority citation revised 28600
223.3 (b)(2) revised; interim 28600
223.7 Revised; interim 28601
Amended 52930
223 Appendix B amended; interim 28601
Appendix B revised 52930
225 Authority citation revised 28601
225.1 Amended; interim 28601
225.5 (a) revised; interim 28601
Introductory text and (b) introductory text republished; (b)(2) revised 48548

49 CFR—Continued

53 FR Page

Chapter II—Continued

225.19 (b) and (c) amended 48548
225.29 Revised; interim 28601
Amended 52931
225 Appendix B amended; interim 28601
Appendix A revised 48548
Appendix B revised 52931
228 Authority citation revised 28601
Authority citation revised 52931
228 Interim rules following 228.107 removed; Appendix A amended; interim 28601
228.21 Revised 52931
228.23 Revised 52931
228 Appendix B added 52931
229 Authority citation revised 28601
229.7 (b) revised; interim 28601
(b) amended 52931
229 Appendix B amended; interim 28601
Appendix B revised 52931
230 Authority citation revised 28602
230.0 (a) revised; interim 28602
231 Authority citation revised 28602
231.0 Added; interim 28602
Amended 52933
231 Appendix A added; interim 28602
Appendix A added 52933
232 Authority citation revised 28602
Authority citation revised 52934
232.0 Added; interim 28602
Amended 52934
232 Appendix designated as Appendix B; Appendix A added; interim 28602
Appendix A revised 52934
233 Authority citation revised 28602
233.11 Revised; interim 28602
Amended 52936
233 Appendix A added 52936
235 Authority citation revised 28602
235.9 Revised; interim 28602
Amended 52936
235 Appendix A added 52936
236 Authority citation revised 28603
236.0 Heading revised; (f) added 52936

49 CFR—Continued

53 FR Page

Chapter II—Continued

236.110 Revised; eff. 12–21–88 37313
236.587 (d) revised; eff. 12–21–88 37313
236 Appendix A revised; interim 28603
Appendix A revised 52936

Chapter III

301.60 Removed 2035
350 Auhority citation revised 15846
350.21 (e)(2) revised 15846
383 Waivers granted in part 37313
383.1 (b) (4) and (5) amended; (b)(6) through (11) added 27648
383.5 Amended 27648
Amended 39050
383.23 Added; eff. 4–1–92 27649
383.51 (b) revised; (d) added 39050
383.71—383.77 (Subpart E) Added 27649
383.72 Added 39051
383.91—383.95 (Subpart F) Added 27651
383.110—383.121 (Subpart G) Added 27654
383.131—383.135 (Subpart H) Added 27657
383.131 (a)(1) revised 39051
383.151—383.155 (Subpart J) Added 27657
385 Revised 50968
386 Authority citation revised 2036
386.1 Amended 2036
386.2 Amended 2036
386.11 (a) nomenclature change 2036
386.48 Nomenclature change 2036
386.54 (b)(6) revised 2036
386.72 (b) (1) and (2) amended 2036
(b)(2) revised 50970
387 Authority citation revised 47543
387.5 Amendment at 51 FR 33856 confirmed 12160
387.15 Amendment at 51 FR 33856 confirmed 12160
387.41 Revised 47543
389 Authority citation revised 2036
389.1 Amended 2036
389.3 Amended 2036
389.5 Amended 2036
389.7 Amended 2036
389.11 Amended 2036

49 CFR—Continued

53 FR Page

Chapter III—Continued

389.13 Nomenclature change 2036
389.17 (b) nomenclature change 2036
389.25 Nomenclature change 2036
389.27 (b) nomenclature change 2036
389.29 Nomenclature change 2036
389.31 (a) nomenclature change; (b)(1) amended 2036
389.33 Nomenclature change; (a) revised 2036
389.35 Nomenclature change; (a) amended 2036
389.37 Nomenclature change 2036
389.38 Removed 2036
390 Revised; eff. 11–15–88 18052
390.5 Amended 39051, 47543
390.21 (b)(2) correctly revised; eff. 11–15–88 27689
(b)(4) revised 47543
390.27 Revised 47543
391 Authority citation revised 18056
Waivers granted in part 37313
391.1 (b) removed; (c) redesignated as (b); eff. 11–15–88 18057
391.2 (a), (b), (c), and (f) removed; (d) and (e) redesignated as (a) and (b); eff. 11–15–88 18057
(c) reinstated 47544
391.3 Removed; eff. 11–15–88 18057
391.5 Removed; eff. 11–15–88 18057
391.7 Removed; eff. 11–15–88 18057
391.15 (c)(2)(i) footnote 1 amended; eff. 11–15–88 18057
(c) revised 39051
391.35 (e) footnote 1 amended; eff. 11–15–88 18057
391.41 (b)(12) footnote 1 amended; eff. 11–15–88 18057
(b)(12) revised 47154
391.43 (e) amended; eff. 11–15–88 18057
(c) and (e) amended 47154
391.51 (g) amended; eff. 11–15–88 18057
391.61 Amended; eff. 11–15–88 18057
391.62 Removed; eff. 11–15–88 18057
391.63 (a) amended; eff. 11–15–88 18057
391.65 (a)(2)(iii) revised; eff. 11–15–88 18057
391.67 Introductory text amended; eff. 11–15–88 18057
391.69 (b) amended; eff. 11–15–88 18057

49 CFR—Continued

53 FR Page

Chapter III—Continued

391.71 (a), (b) introductory text, and (1) amended; eff. 11–15–88 18057
391.81—391.123 (Subpart H) Added 47151
392 Authority citation revised 18057
392.1 Revised; eff. 11–15–88 18057
392.4 (a)(1) footnote 1 amended; eff. 11–15–88 18057
392.5 (a)(2) revised 39052
393 Authority citation revised 18057
Authority citation revised 49384
393.1 Revised; eff. 11–15–88 18057
393.1—393.5 (Subpart A) Revised 49384
393.2 Removed; eff. 11–15–88 18057
393.11 Revised 49385
393.12—393.16 Removed 49385
393.18 Removed 49397
393.19 Revised 49397
393.24 (c) footnote amended 49397
393.25 (c) introductory text, (2), (3), and (d) introductory text amended; (e) removed; (f) and (g) redesignated as (e) and (f) 49397
393.26 (d) removed; (e) redesignated as (d); (b) and (c) revised 49397
393.27 Revised 49397
393.28 Revised 49397
393.31 Existing text designated as (a) and (b); new (b) revised 49397
393.41 (a) revised 49398
393.42 Amended 49398
393.44 Revised 49400
393.45 (b), (c), and (d) revised 49400
393.46 (f) added 49400
393.50 (a) revised; (c) removed 49400
393.51 (c) introductory text, (d) introductory text, and (e) amended; (g) removed 49400
393.67 (f) revised 49400
393.69 (a) introductory text amended 49400
393.71 (h) (7) and (9) revised; (i) removed 49400
393.75 (f)(1) revised; eff. 11–15–88 18057

49 CFR—Continued

53 FR Page

Chapter III—Continued

(a) and (f), and footnote 1 revised; Table I removed; Table II redesignated as Table I 49401
393.76 (e)(2)(iv) revised; (e)(2)(v) removed 49401
393.77 (a) removed; (b) and (c) redesignated as (a) and (b); new (b) (5) and (11) revised 49401
393.83 Revised 49401
393.84 Revised 49401
393.87 Revised 49401
393.89 Amended 49402
393.91 Revised 49402
393.201—393.209 (Subpart J) Added 49402
394 Authority citation revised 18057
394.1 (c) revised; eff. 11–15–88 18057
394.3 (b)(3) amended; eff. 11–15–88 18057
(a) introductory text correctly revised; eff. 11–15–88 27689
394.5 Removed; eff. 11–15–88 18058
394.7 (a) amended; eff. 11–15–88 18058
(b)(11) added 47154
394.9 (a) and (d) amended 18058
(b) revised 47154
394.20 (a) and (b) amended 47154
395 Authority citation revised 18058, 38670
395.1 Removed; eff. 11–15–88 18058
395.2 (f) and (j) removed; (g) through (i) redesignated as (f) through (h); eff. 11–15–88 18058
(k) correctly designated as (i) 44589
(k) redesignated as (i) 47544
(k) added; eff. 10–31–88 38670
395.3 (a)(3) amended; eff. 11–15–88 18058
395.8 (f)(11), (h)(2), (k)(2) amended; (l)(2) removed; (l)(3) redesignated as (l)(2); eff. 11–15–88 18058
(a) and (e) revised; eff. 10–31–88 38670
395.13 (c)(2) amended; eff. 11–15–88 18058
(b)(2) revised; eff. 10–31–88 38670
(b)(2) revised 47544
395.15 Added; eff. 10–31–88 38670
396 Authority citation revised 18058
Authority citation revised 49410

49 CFR—Continued

53 FR Page

Chapter III—Continued

396.1 (a) designation and (b) removed; eff. 11–15–88 18058
396.3 (c) removed; (d) redesignated as (c); eff. 11–15–88 18058
396.11 (d) revised; eff. 11–15–88 18058
396.15 Heading and (a) revised; eff. 3–7–90 49410
Eff. date corrected to 12–7–89 49968
396.17 Added; eff. 3–7–90 49410
Eff. date corrected to 12–7–89 49968
396.19 Added; eff. 3–7–90 49410
Eff. date corrected to 12–7–89 49968
396.21 Added; eff. 3–7–90 49410
Eff. date corrected to 12–7–89 49968
396.23 Added; eff. 3–7–90 49410
Eff. date corrected to 12–7–89 49968
397 Authority citation revised 18058
397.1 (c) removed; eff. 11–15–88 18058
397.19 (b) amended; eff. 11–15–88 18058
397.21 Removed; eff. 11–15–88 18058
350—399 (Subchapter B) Appendix F added; eff. 11–15–88 18058
Appendix G added; eff. 3–7–90 49411
Appendix G effective date corrected to 12–7–89 49968

1989

49 CFR

54 FR Page

Chapter II

209.1 (b) revised 42905
209.3 (e) revised; (f) through (i) added 42906
209.5 (d) and (e) revised 42906
209.6 Added 42906
209.7 (a) and (b) revised 42906
209.8 Added 42906
209.9 Revised 42906
209.13 Revised 42906
209.15 Revised 42907
209.17 Added 42907
209.301—209.335 (Subpart D) Added 42907
210.3 (a) revised 33228
215.5 (f) revised 33228

49 CFR—Continued

54 FR Page

Chapter II—Continued

216.1 (a)(2) revised 33229
217 Authority citation revised 53279
217.3 (b)(2) revised 33229
217.13 (d) revised 53279
218.5 (n) added; eff. 1–1–90 39545
218.51—218.61 (Subpart D) Added 5492
218.71—218.80 (Subpart E) Added; eff. 1–1–90 39545
218 Appendix A amended; Appendix B added 5492
219 Random drug testing implementation guidance availability 35879
Revised 53259
219.3 (c) revised 22284
(c) revised 52945
219.102 Revised 22284
219.601 (a) and (d)(2) revised 22284
(b) introductory text republished; (b)(1) revised; eff. 1–16–90 39644
219.701 (a) revised 22285, 39645
219.711 (c)(1) revised 22285, 39645
219 Appendix A revised; eff. 10–1–89 39716
Appendix B corrected 40879
225.1 Amended 33229
225.17 (d) revised 53279
228.3 Revised 33229
228.5 Revised 33229
229.3 Revised 33229
229.5 (c) revised; (l) redesignated as (m); new (l) added 33229
231.0 Revised 33229
232.0 Revised 33230

Chapter III

325.7 Table 1 revised 50385
325.13 Nomenclature change 50385
325.33 (a) amended 50385
325.53 (a)(1) amended 50385
325.73 Table 2 amended 50385
383 Waiver granted in part 33230
383.1 (b) (2) and (5) revised 40787
383.5 Amended 40787
383.23 (b) amended; footnote 1 added 22285
383.31 (a), (b), and (c)(4) revised 40787
383.33 Revised 40788
383.51—383.53 (Subpart D) Heading revised 40788
383.51 (b)(1), (3) (i) through (v), and (c) (1) and (2) revised 40788

49 CFR—Continued

54 FR Page

Chapter III—Continued

383.73 (g) revised 40788
383.91 (c)(3) revised; figure 1 amended 47989
385 Determination of status 7191
386 Determination of status 7191
387.7 (b)(3) added 49092
387.15 Introductory text revised 49092
387.31 (b)(3) added 49092
387.39 Introductory text amended 49093
390 Determination of status 7191
Comment time extended 28818
390.3 (f)(6), (g), and (h) removed; (f)(7) redesignated as (f)(6) 12202
391 Determination of status 7191
Comment time extended 28818
391.2 (d) added 12202
391.15 (c)(2)(iv) revised 40788
391.43 (c), (d), and (e) redesignated as (d), (e), and (f); new (c) added; new (f)(3) revised 12202
391.45 Introductory text, (a), and (b) revised 12202
391.83 (c) revised 39547, 53295
391.93 (b) and (c) revised 46618
392 Determination of status 7191
393 Determination of status 7191
Comment time extended 28818
393.1 Revised 12202
Revised; interim 48617
393.42 (b)(4) added; interim 48617
394 Determination of status 7191
395 Determination of status 7191
396 Determination of status 7191
State periodic inspection programs 50726
396.17 (c) revised 50725
396.21 Revised 50725
398 Determination of status 7191
399 Determination of status 7191

1990

49 CFR

55 FR Page

Chapter II

217 Authority citation revised 22794
217.13 (d)(6) revised 22794
219.23 Heading corrected 22793
219.104 (e)(1) amended 22793
219.203 (b)(4) revised; (d)(2) corrected 22793
219.301 (f)(4) correctly revised 22793
219.303 (d)(1) amended 22794

49 CFR—Continued

55 FR Page

Chapter II—Continued

219 Appendix B corrected 22793
Appendix B revised 22794
Appendix A and C amended 22794
225 Authority citation revised 37826
225.5 (j) added; eff. 12–1–90 37827
Introductory text and (b) introductory text republished; (b)(2) revised 52847
225.7 (b) amended; eff. 12–1–90 37827
225.12 Added; eff. 12–1–90 37827
(g)(3) corrected 39538
225.13 Amended; eff. 12–1–90 37828
225.19 (b) and (c) amended 52847
225.21 (g) and (h) added; eff. 12–1–90 37828
225.27 (a) amended; eff. 12–1–90 37828
225 Appendix A revised 52847
Appendix B amended; eff. 12–1–90 37828
228 Appendix A amended 30893
Appendix C added 30893
240 Removed 4178

Chapter III

383.51 (b)(3)(iv) corrected 6727
383.77 (a) revised 25606
387.7 Regulation at 51 FR 22083 confirmed 40663
390.5 Amended 32916, 35435
390.21 Heading revised; (e) added 6993
391.41 (c) added; (b)(12) revised; interim 3554
391.43 (a) redesignated as (a)(1); (a)(2) added; (d) and (f) amended; interim 3555
391.81—391.123(Subpart H) Heading revised 3555
391.85 Amended; interim 3555
391.87 (a) through (g) redesignated as (b) through (h); new (a) added; new (c)(2) and (f) revised; new (g) and (h)(2) amended; interim 3555
391.97 (a) amended; (b) redesignated as (d); new (b) and (c) added; interim 3555
391.99 (b) amended; (c) revised; interim 3556
391.101 (b) revised; interim 3556
391.103 (d) revised; interim 3556
391.105 (a) and (c) revised; interim 3556

49 CFR—Continued

55 FR Page

Chapter III—Continued

391.107 (b) revised; interim 3556
391.109 (a) and (b) redesignated as (b) and (c); new (a) and (d) added; interim 3556
391.111 (b) revised; interim 3556
391.113 (a) revised; (c) added; interim 3556
391.115 (b) revised; new (c) added; interim 3557
391.119 (a)(2) revised; interim 3557
391.121 (b)(2) amended; (d) redesignated as (c); interim 3557
395.3 (b) introductory text revised 32916

1991

49 CFR

56 FR Page

Chapter II

209.337 Added (OMB numbers) 66791
219.3 (c) revised 18991
229 Authority citation revised 66792
230 Authority citation revised 66792
231 Authority citation revised 66792
232 Authority citation revised 66792
234 Added 33728
Regulation at 56 FR 33728 eff. 12–1–91 49417
Regulation at 56 FR 33738 effective date revised to 1–1–92 61169
234.13 OMB number pending 49417
240 Added 28254
Meetings 55240
245 Added; interim; eff. 10–30–91 49425
Meetings 59893

Chapter III

385 Authority citation revised 40805, 51344
385.1 Revised; interim 40805
385.3 Amended; interim 40805
385.11 Revised; interim 40806
385.13 Revised; interim 40806
385.15 Revised; interim 40806
385.17 Revised; interim 40806
385.19 Revised 51344
385 Appendix revised 5365
386 Authority citation revised 10182
386.2 Amended 10182

49 CFR—Continued

56 FR Page

Chapter III—Continued

386.11 (b) introductory text, (2), (c) introductory text and (3) revised; (c)(4) added 10182
386.14 (a), (b)(1), (2), (3), (c) and (e) revised; (f) added 10183
386.15 Removed 10183
386.16 (c)(1) introductory text and (v) revised; (c)(1)(vi) added; (c)(1)(iv) amended 10183
386.21—386.23 (Subpart C) Heading revised 10183
386.21 Redesignated as 386.22; new 386.21 added 10183
386.22 Redesignated as 386.23; (a) introductory text and (b) revised; new 386.22 redesignated from 386.21 10183
386.23 Redesignated from 386.22; (a) introductory text and (b) revised 10183
386.72 (b)(2) amended; (b)(3) and (4) added 10184
386.81—386.82 (Subpart G) Added 10184
386 Appendix A added 10184
391.83 (c) revised 18995
391.85 Amended; eff. 11–14–91 and 1–1–92 40809
391.93 (b) and (c) revised; (d) redesignated as (e); new (d) added; eff. 11–14–91 and 1–1–92 40809
396.25 Added 491
494.9 (c) revised 49429

1992

49 CFR

57 FR Page

Chapter II

212 Authority citation revised 28115
212.3 (d)(5) and (6) revised; (e) redesignated as (g); (d)(7), new (e) and (f) added 28115
212.101 (b)(1) and (c) revised 28115
212.105 (e)(1)(i) revised 28115
212.109 Revised 28115
212.201 (d)(5) and (f) revised 28115
212.227 Redesignated as 212.231; new 212.227 added 28115
212.229 Added 28116
212.231 Redesignated from 212.227 28115
214 Added 28127
Regulation at 57 FR 28127 effective date corrected 29561

49 CFR—Continued

57 FR Page

Chapter II—Continued
Regulations at 57 FR 28127 and 29561 effective date delayed to 8–24–92 30429
214.103 Suspended 45327
214.105 Suspended 45327
219.3 (c) revised 31279
245 Revised 30602
255 Removed 52734
268 Removed 52735

Chapter III
350 Revised; eff. 10–8–92 40956
355 Added; eff. 10–8–92 40962
383 Waivers 13650, 31457
383.23 (b) amended 31457
383.51 (c)(3) removed 53295
390.5 Amended 33278, 33646
390.21 (a) revised 3142
390.23 Revised 33647
390.25 Added 33647
391 Waivers 10295, 31458, 45002
391.43 (a)(1) revised; (c) through (f) redesignated as (d) through (g); new (c) added; newly redesignated (d) through (g) amended 33278
391.83 (c) revised 31278
395.1 Added 33647
395.2 Revised 33648
395.3 Revised 33649
395.7 Removed 33649
395.8 (k)(2) and (l) removed; (k)(3) redesignated as (k)(2) 33649
395.10 Removed 33649
395.11 Removed 33649
395.12 Removed 33649
396 Authority citation revised 40964
396.9 (d)(3)(ii) revised; eff. 10–8–92 40964
397 Authority citation revised 44131
397.101—397.103 (Subpart D) Added; interim 44131
397.201—397.225 (Subpart E) Added; interim 44132

1993

49 CFR

58 FR Page

Chapter II
217 Common preamble 68194
217.13 (d) removed 68235
218 Nomenclature change 43292

49 CFR—Continued

58 FR Page

Chapter II—Continued
Appendix B redesignated as Appendix C; Appendix A and new Appendix C amended; new Appendix B added 43293
218.5 Revised 43292
218.22 Added 43293
218.51 (b)(3) revised; eff. 11–5–93 36613
218.61 (c) revised; eff. 11–5–93 36613
219 Common preamble 68194
219.803 (Subpart I) Added 68235
219 Appendix D added 68237
Appendix D2 added 68250
228 Authority citation revised 18165
228 Appendix A amended 18165
229 Authority citation revised 6902, 36613
229.4 (b) revised; eff. 11–5–93 36613
229.5 (g) through (m) redesignated as (h) through (o); new (g) and (i) added; eff. 11–5–93 36613
229.25 (e) added; eff. 11–5–93 36614
229.133 Added; interim 6902
229.135 Added; effective 11–5–93 36614
Technical correction 40468
229 Appendix B amended; eff. 11–5–93 36615
240.5 (a) revised; interim 19002
240.7 Amended; interim 19002
240.13 (a) revised; interim 19003
240.117 (d), (e) and (h) revised; (i) added; interim 19003
240.215 (j) added; interim 19003
240.217 (b) revised; interim 19003
240.223 (a)(7) revised; interim 19003
240.229 (a) revised; (f) added; interim 19003
240.305 Heading, (a) and (c) revised; interim 19004
240.307 Revised; interim 19004
240.401 (a) revised; interim 19005

Chapter III
Chapter III Interpretation 60734
350 Appendix C amended 33776
Appendix C amended; interim 40600
355 Appendix A amended 33776
385.5 (f) revised 33776
385.7 (f) revised 33776
390.3 (f)(2) revised 33776
390.5 Introductory text revised; section amended 6729
Amended 33777, 59196, 67375

49 CFR—Continued

58 FR Page

Chapter III—Continued

390.15 Added 6729
390.27 Table amended 44464
391 Waivers 40690
Common preamble 68194
391.43 Amended; (e) introductory text and (g) revised 59196
391.85 Amended 33777
391.87 (h) revised 68222
391.89 Revised 33777
391.113 (a) revised 33777
392.71 Added 67375
394 Removed 6729
395.1 (i)(1) revised 33777
395.8 (f) revised 33777

1994

49 CFR

59 FR Page

Chapter II

207 Added 6587
209 Authority citation revised 43675
209.3 Revised; eff. 1–1–95 43676
209.401—209.409 (Subpart E) Added; eff. 1–1–95 43676
212 Authority citation revised 50104
212.231 Redesignated as 212.235; new 212.231 added; eff. 1–1–95 50104
212.233 Added; eff. 1–1–95 50105
212.235 Redesignated from 212.231; eff. 1–1–95 50104
214.103 (b) and (c) revised 30883
214.111 Revised 30883
214.113 (b) revised; (c) removed 30883
214.115 (b) revised 30883
214.117 (b) revised 30884
217 Authority citation revised 43070
Technical correction 46703
217.4 Added; eff. 11–21–94 43070
217.7 Revised; eff. 11–21–94 43070
217.9 (a), (b) introductory text, (5), (c) and (d) revised; (e) added; eff. 11–21–94 43070
217.11 Heading, (a), (b) introductory text, (4) and (c) revised; eff. 11–21–94 43071
217.13 Removed; new 217.13 redesignated from 217.15; new (b)(4) removed; eff. 11–21–94 43071
217.15 Redesignated as 217.13; eff. 11–21–94 43071

49 CFR—Continued

59 FR Page

Chapter II—Continued

217 Appendix A revised; eff. 11–21–94 43071
219 Nomenclature change; eff. 1–1–95 7457
Authority citation revised 60563, 62228, 62239
Announcement 67641
219.3 (a) introductory text and (c) revised; (b)(3) added; eff. 1–1–95 7457
219.5 Amended; eff. 1–1–95 7457
Amended 62228
219.9 (a) amended; (c) added; eff. 1–1–95 7458
219.11 (b)(2) revised; (g) redesignated as (h); (c)(4) and new (g) added; eff. 1–1–95 7458
219.15 Removed; eff. 1–1–95 7458
219.23 Heading, (a) and (b) revised; (d), (e) and (f) added; eff. 1–1–95 7458
219.101 (a)(2)(ii) revised; (a)(3) and (4) added; eff. 1–1–95 7459
219.104 (a), (d) and (e) revised; (f) and (g) added; eff. 1–1–95 7459
219.107 Added; eff. 1–1–95 7460
219.201 (a)(1)(iii), (2)(ii) and (b) revised; eff. 1–1–95 7460
219.203 (a)(1) revised; (d)(2) amended; eff. 1–1–95 7460
219.205 (a) revised; eff. 1–1–95 7460
219.206 Added; eff. 1–1–95 7461
219.209 (a)(1) amended; (c) added; eff. 1–1–95 7461
Corrected 50699
219.211 (a), (c) and (d) amended; (e) and (h) revised; eff. 1–1–95 7461
219.213 (a) and (b) revised; eff. 1–1–95 7461
219.300 Added; eff. 1–1–95 7461
(d) added 62239
219.301—219.309 (Subpart D) Heading revised; eff. 1–1–95 7461
219.301 (b)(1), (f) and (g) removed; (b) introductory text, (2) introductory text and (c) introductory text revised; eff. 1–1–95 7461
219.302 Added; eff. 1–1–95 7462
(f) removed 62239
219.303 Revised; eff. 1–1–95 7462
Revised 60563
219.307 Removed; eff. 1–1–95 7462
219.309 Removed; eff. 1–1–95 7462

49 CFR—Continued

59 FR Page

Chapter II—Continued

219.501—219.505 (Subpart F) Heading revised; eff. 1–1–95 7462
219.501 Revised; eff. 1–1–95 7462
(e) removed; (a) through (d) redesignated as (b) through (e); new (a) added; new (b) through (e) revised 60564
219.503 Revised; eff. 1–1–95 7462
219.505 Heading revised; (a) designation and (b) removed; eff. 1–1–95 7462
219.601—219.605 (Subpart G) Heading revised; eff. 1–1–95 7462
219.601 Heading, (b)(2)(iii) concluding text and (7) revised; (c) amended; eff. 1–1–95 7462
219.602 Added 62228
219.603 Heading revised; (a) designation, (b) and (c) removed; eff. 1–1–95 7463
219.605 Heading revised; (b) amended; eff. 1–1–95 7463
219.607 Added; eff. 1–1–95 7463
219.608 Added; eff. 1–1–95 7464
219.609 Added; eff. 1–1–95 7464
219.611 Added; eff. 1–1–95 7464
219.701—219.713 (Subpart H) Heading revised; eff. 1–1–95 7464
219.703 Heading revised; eff. 1–1–95 7464
219.707 Heading revised; (a) amended 7464
219.708 Added 7464
219.713 Removed; eff. 1–1–95 7464
219.715 Added; eff. 1–1–95 7464
219.801 Added; eff. 1–1–95 7465
Corrected 50699
219.901—219.905 (Subpart J) Added; eff. 1–1–95 7466
219 Appendix D3 added; eff. 1–1–95 7468
Appendix D4 added; eff. 1–1–95 7477
220 Authority citation revised 43071
Technical correction 46703
220.5 (d) and (e) added; eff. 11–21–94 43071
220.21 Heading and (b) revised; eff. 11–21–94 43072
229 Authority citation revised 24963
229.133 (b) revised; interim 24963
(b)(2)(iii) corrected 39705
234 Authority citation revised 50105

49 CFR—Continued

59 FR Page

Chapter II—Continued

234.1—234.6 (Subpart A) Designated as Subpart A; heading added; eff. 1–1–95 50105
234.1 Revised; eff. 1–1–95 50105
234.3 Revised; eff. 1–1–95 50105
234.4 Added; eff. 1–1–95 50105
234.5 Amended; eff. 1–1–95 50105
234.6 (a) and (b) redesignated from 234.15 and 234.17; heading added; new (a) revised; eff. 1–1–95 50105
234.7—234.13 (Subpart B) Designated as Subpart B; heading added; eff. 1–1–95 50105
234.15 Redesignated as 234.6(a); eff. 1–1–95 50105
234.17 Redesignated as 234.6(b); eff. 1–1–95 50105
234.101—234.109 (Subpart C) Added; eff. 1–1–95 50106
234.201—234.273 (Subpart D) Added; eff. 1–1–95 50107

Chapter III

Chapter III Nomenclature change 60323
350.11 (a) revised; interim 5264
350.21 (d)(3) added; interim 5264
350 Appendix C amended; interim 5264
382 Added 7505
Authority citation revised 49586, 60323
382.101 OMB number 49586
382.107 Amended 60323, 62229
382.303 (b)(2) redesignated as (b)(4); new (b)(2) and (3) added 62240
382.305 Revised 62229
382.307 (e)(2) and (3) redesignated as (e)(4) and (5); new (e)(2) and new (3) added 62240
383 Authority citation revised 26028
383.5 Amended 26028
383.37 (a) and (b) amended; (c) added 26028
383.51 (d) redesignated as (e); new (d) added 26028
383.53 Revised 26028
384 Added 26039
387.3 (c) revised 63923
387.5 Amended 63923
387.7 (d)(3) revised 63923
387.9 Revised 63923
387.15 Amended 63924

49 CFR—Continued

59 FR Page

Chapter III—Continued
387.17 Revised 63924
390 Authority citation revised 60323, 67554
390.3 (f)(6) removed; eff. 1–1–95 8752
(b) through (f) redesignated as (c) through (g); new (b) added 67554
390.5 Amended; eff. 1–1–95 8752
Amended 26028, 60323
390.50—390.60 (Subpart C) Added 67554
391 Authority citation revised 49586, 60323
Determination 59386
391.11 (b)(11) removed; (b)(12) redesignated as (b)(11) 60323
391.15 (d) added 26028
391.31 (a) revised; eff. 1–1–95 8752
391.35 (a) revised; eff. 1–1–95 8752
Removed 60323
391.37 Removed 60323
391.51 (a) revised; eff. 1–1–95 8752
(b)(2), (c)(3), (4) and (d)(2) amended; (c)(5) and (d)(3) removed; (d)(4) redesignated as (d)(3) 60323
391.61 Revised 60323
391.67 Revised 60324
391.68 Added; eff. 1–1–95 8752
Revised 60324
391.69 Revised 60324
391.71 (a) amended 60324
Heading, (a)(1) and (b)(3) revised 63924
391.73 Added; eff. 1–1–95 8752
Revised 60324
391.83 (a) revised; eff. 1–1–95 8753
391.87 OMB number 49586
391.93 Revised 7514
391.125 Added 7514
392 Authority citation revised 34711, 60324, 63924
392.5 Heading, (a)(1), (2), (3) and (b)(2) revised 7515
392.9a Removed 60324
392.10 (a)(2) through (5) and (b)(1) revised 63924
392.12 Removed 60324
392.18 Removed 60324
392.21 Removed 60324
392.22 (b)(1) introductory text, (2)(i) and (ii) revised; (b)(1)(iv) added; (b)(2)(vii) and authority citation removed 34711

49 CFR—Continued

59 FR Page

Chapter III—Continued
392.25 Revised 63925
392.30 Removed 60324
392.31 Removed 60324
392.32 Removed 60324
392.40 Removed 60324
392.41 Removed 60324
392.42 (Subpart E) Heading revised 60324
392.61 Removed 60324
392.62 Removed 60324
392.65 Removed 60324
392.69 Removed 60324
393 Authority citation revised 34712
393.7 Added 34712
(b)(2) through (6) added 34718
393.42 (b)(4) removed 25574
393.67 (a)(6) added; eff. 1–1–95 8753
393.95 (f)(2), (g) and (j) revised; (f)(3) added 34712
393.102 (b) revised; (g) removed 34718
(b)(6) table corrected 43898
395 Authority citation revised 60324
395.2 Amended 7515, 60324
395.8 (a) introductory text revised; eff. 1–1–95 8753
396 Authority citation revised 60324
396.3 (b)(4) removed; (b)(5) redesignated as (b)(4); (b)(3) amended 60324
396.3 (b) introductory text revised; eff. 1–1–95 8753
396.11 (d) revised; eff. 1–1–95 8753
397 Authority citation revised 51830, 63925
397.5 Revised 63925
397.7 Revised 63925
397.9 Removed 51830
397.13 Revised 63925
397.19 Revised 63925
397.61—397.77 (Subpart C) Added 51830
397.201 (a) revised; (c) amended 51834
397.203 (a)(3) revised 51834
350—399 (Subchapter B) Appendix H added 67556
Chapter III Appendixes A and C removed 60324

1995

49 CFR

60 FR Page

Chapter II

209 Authority citation revised 53136
209.321 (a) revised; interim 53136
213 Policy statement 20654
218 Authority citation revised 11049
218.5 Amended 11049
218.22 (c)(3), (4), (d) and (e) amended 11050
218.24 Added 11050
Stayed 30469
218 Appendix A amended 11050
219.501 (f) added 24766
219 Appendix B revised 61665
Appendix C revised 19539
229 Authority citation revised 27905
229.5 (i) revised 27905
229.25 (e)(2) revised 27905
229.135 (a) through (d) revised 27905
240 Authority citation revised 53136
240.7 Amended; interim 53136
240.119 (d)(4)(ii) amended; interim 53136
240.203 (a)(1) revised; interim 53136
240.205 Heading revised; interim 53136
240.217 (c)(1) revised; interim 53137
240.307 (a) revised; interim 53137
240.407 Revised; interim 53137
240.409 Revised; interim 53137
240.411 (a) revised; interim 53138
240 Appendix A amended; interim 53138

Chapter III

Chapter III Nomenclature change 38742
325.13 (d)(3) amended 38743
325.93 (b) revised 38743
350 Authority citation revised 38743
350—399 (Subchapter B) Request for comments 27700
350.3 Amended 38743
350 Appendix C amended 38743
382 Authority citation revised 2032, 38743
382.103 Revised; eff. 10–23–95 49325
382.115 (a) revised 2032
Revised; eff. 10–23–95 49325
382.301 (e) added 24766

49 CFR—Continued

60 FR Page

Chapter III—Continued

382.401 (b)(1)(vi) revised 13370
382.403 (a) revised 13370
383 Waiver denied 34188
384 Authority citation revised 57545
384.231 (b)(2) revised 57545
385 Authority citation revised 38743
385.23 Amended 38743
387 Authority citation revised 38743
387.31 (b)(3)(i) removed; (b)(3)(ii) and (iii) redesignated as (b)(3)(i) and (ii) 38743
388.5 (a) amended 38743
390 Authority citation revised 38743
390.3 Regulation at 59 FR 67554 eff. date extended to 9–27–95 26002
Regulation at 59 FR 67554 eff. date extended to 9–1–96 40761
390.5 Amended 38743, 44440
390.7 (a)(3) removed; (a)(4) redesignated as (a)(3) 38744
390.15 (b)(1)(vi) amended 38744
OMB number 44441
390.19 Amended 38744
390.21 (b)(1), (2), (4), (5), (c)(1), (3), (d), (e)(1), (2) introductory text, (ii), (iv)(B)(*2*), (iv)(C) and (v) amended 38744
390.23 (a)(3)(i) and (b) amended 38744
390.27 Heading revised 38744
390.33 Amended; heading revised 38744
390.50—390.60 (Subpart C) Regulation at 59 FR 67554 eff. date extended to 9–27–95 26002
Regulation at 59 FR 67554 eff. date extended to 9–1–96 40761
391 Authority citation revised 38744
391.1 (a) amended 38744
391.2 (a), (b), (c) and (d)(4) revised 38745
391.11 (a), (b) introductory text, (3) through (6) and (9) amended 38744
(b)(7) revised 38745
391.15 (c)(2)(ii) and (v) amended 38744

49 CFR—Continued

60 FR Page

Chapter III—Continued

(c)(2)(ii) Footnote 1, (iii) Footnote 1 and (d)(2)(iv) revised 38745
391.21 (a) and (b)(5) amended 38744
391.25 Amended 38744
391.27 (c) amended 38745
391.31 (a), (b), (c) introductory text and (3) through (8) amended 38744
391.31—391.37 (Subpart D) Heading revised 38746
391.33 (a) introductory text and (1) amended 38744
391.41 (a), (b) introductory text, (2)(ii) and (5) through (9) amended 38744
(b)(12) amended 38745
391.43 (e) and (f) amended 38745
(g) introductory text revised 38746
391.47 (c), (d)(1), (2) and (f) amended 38746
391.49 (a), (d)(3)(i)(A), (e)(4) and (g) amended 38745
(c)(2)(v), (3) introductory text, (vii) and (viii) revised 38746
391.51 (b)(1), (5), (d)(1), (3), (e) and (h)(1) amended 38745
391.61 Amended 38745
391.63 (a) introductory text and (b) amended 38745
391.65 (a)(2), (iv) and (vii) amended 38745
391.67 Introductory text amended 38745
Heading revised; (d) removed; (e) redesignated as (d) 38746
391.68 Revised 38746
391.69 Amended 38745
391.71 (a) introductory text and (b) introductory text amended 38745
Heading revised 38746
391.73 Amended 38745
391.83 (c) revised 56
391.85 Amended 38746
391.87 (h)(1) amended; (h)(3) revised; (h)(4) added 13370
392 Heading revised 38746
392.1 Amended 38746
392.2 Amended 38746
392.3 Amended 38746
392.4 (a)(1) footnote 1 revised; (a)(4) and (c) amended 38746
392.6 Amended 38746

49 CFR—Continued

60 FR Page

Chapter III—Continued

392.7 Amended 38746
392.8 Amended 38746
392.9 (a) introductory text, (1), (2), (3), (b)(1), (2), (3) introductory text, (ii), (iii) and (4) amended 38746
392.10 (a) introductory text, (2) and (3) amended 38746
(b)(3) amended 38747
392.10—392.18 (Subpart B) Heading revised 38746
392.11 Amended 38747
392.13 Amended; heading revised 38747
392.14 Amended 38747
392.15 (a) through (e) amended 38747
392.16 Amended 38747
392.20 Amended; heading revised 38747
392.20—392.25 (Subpart C) Heading revised 38746
392.22 Heading revised; (a), (b)(1) introductory text, (i), (ii), (iii), (2)(i) through (vi) amended 38747
392.24 Amended 38747
392.25 Amended 38747
392.33 Amended 38747
392.50 (a), (b) and (c) amended 38747
392.51 Amended 38747
392.60 Revised 38747
392.63 Amended 38747
392.64 Amended; heading revised 38747
392.66 Revised 38747
392.67 Amended; heading revised 38747
392.68 Amended 38747
393 Waiver 12146
Authority citation revised 46245
393.53 Added; eff. 10–6–95 46245
395 Authority citation revised 38748
395.1 (b) revised; (d)(2) amended 38748
395.2 Amended 38748
395.3 Heading and (b) revised 38748
395.8 (f)(5), (6), (h)(2), (3) and (4) revised; (k)(2) amended 38748
395.13 (c)(1)(i), (ii), (d)(1), (2) and (4) amended 38748
395.15 (d)(2), (g) introductory text, (i)(2), (4), (7) and (j)(2)(iv) revised 38748

49 CFR—Continued

60 FR Page

Chapter III—Continued
396 Authority citation revised.....38749
396.23 (a) revised.....38749
397.1 (a) revised.....38749
350—399 (Subchapter B) Regulation at 59 FR 67556 eff. date extended to 9–27–95.....26002
Appendix B amended.....38743, 38749
Regulation at 59 FR 67556 eff. date extended to 9–1–96.....40761

1996

49 CFR

61 FR Page

Chapter II
209.101 (a) revised.....38646
209.103 Revised.....38646
209.105 (a) and (c) revised.....38646
209.131 Revised.....38647
209.133 Revised.....38647
209.201 Revised.....38647
209 Appendix B added.....38647
212.301 Removed.....26125
212.303 Removed.....26125
212.305 Removed.....26125
212.307 Removed.....26125
212 Appendices A, B and C removed.....26125
214 Authority citation revised.....65975
214.4 Added.....65975
214.7 Amended.....65975
214.301—214.355 (Subpart C) Added.....65976
214 Appendix A amended.....65981
219 Authority citation revised.....60634
219.5 Amended.....37224, 60634, 67490
219.201 (a)(1) introductory text, (2) introductory text and (4) revised.....60634
225 Authority citation revised.....30967, 59371
Meetings.....37842
225.1 Revised; eff. 1–1–97.....30967
225.3 Revised; eff. 1–1–97.....30967
Introductory text, (a), (b), (c) introductory text and (1) through (4) redesignated as (a) introductory text, (1), (2), (3) introductory text and (i) through (iv); new (a) introductory text revised; new (b), new (c) and (d) added.....67490
225.5 Revised; eff. 1–1–97.....30968

49 CFR—Continued

61 FR Page

Chapter II—Continued
Amended.....59371, 67490
225.7 Amended; eff. 1–1–97.....30969
225.11 Revised; eff. 1–1–97.....30969
225.12 (a) and (g)(3) amended; (h)(1) and (2) revised; eff. 1–1–97.....30969
(b)(2)(iii) amended; eff. 1–1–97.....30973
225.13 Amended; eff. 1–1–97.....30973
225.15 (a) amended; eff. 1–1–97.....30973
225.19 (b) and (c) amended; (d) revised; (e) added; eff. 1–1–97.....30969
(a) and (b) amended; eff. 1–1–97.....30973
(e) revised.....60634
(c) amended.....67490
225.21 (b) amended; (f) removed; (g) and (h) redesignated as (f) and (g); new (h) and (i) added; eff. 1–1–97.....30969
(e) amended; eff. 1–1–97.....30973
225.25 Revised; eff. 1–1–97.....30970
(c) revised.....59371
(h) introductory text amended; (h)(12) and (13) revised; (h)(15) added.....67491
225.27 (a) amended; eff. 1–1–97.....30971
(a) amended.....67491
225.29 Amended; eff. 1–1–97.....30971
225.31 (f) revised; eff. 1–1–97.....30971
225.33 Added; eff. 1–1–97.....30972
(a)(10)(ii) amended.....59371
(a) introductory text amended.....67491
225.35 Added; eff. 1–1–97.....30972
Amended.....59371
225.37 Added; eff. 1–1–97.....30972
225 Appendix A removed; Appendix B redesignated as Appendix A; new Appendix A revised; eff. 1–1–97.....30973
Appendix B added.....60634
228 Authority citation revised.....20495
228 Appendix A amended.....20495
229 Authority citation revised.....8887
229.9 (a) introductory text revised.....8887
229.125 Heading revised; (d) through (h) added.....8887
229.133 (c) revised.....8887

49 CFR—Continued

61 FR Page

Chapter II—Continued
229 Appendix B amended 8888
233.9 Revised; interim 33872
234 Revised; interim 31806
235.7 (c)(24)(vi) added; interim 33872
236.590 Revised; interim 33873
251 Removed 4938
258 Removed 4938
Chapter III
365 Authority citation added 54707
Heading redesignated from Part 1160 heading 54707
365.101—365.123 (Subpart A) Redesignated from 1160.1—1160.12 (Subpart A) 54707
365.201—365.207 (Subpart B) Redesignated from 1160.40—1160.43 (Subpart B) 54707
365.301—365.309 (Subpart C) Redesignated from 1160.60—1160.64 (Subpart C) 54707
365.401—365.413 (Subpart D) Redesignated from Part 1181 54707
366 Redesignated from Part 1044 54707
367 Redesignated from Part 1023 54707
367.5 Regulation at 60 FR 30012 stayed through 1–1–98; regulation at 60 FR 39875 eff. date extended through 12–31–97 64295
368 Redesignated from Part 1171 54707
369 Redesignated from Part 1167 54707
371 Redesignated from Part 1045 54707
372 Heading added 54708
Authority citation added 54708
372.101—372.117 (Subpart A) Redesignated from Part 1047 54708
372.115 Heading revised 54708
372.201—372.243 (Subpart B) Redesignated from Part 1048 54708
372.301—372.303 (Subpart C) Redesignated from Part 1049 54708
373 Heading added 54708
Authority citation added 54708
373.101—373.105 (Subpart A) Redesignated from Part 1051; heading revised 54708
373.101 Heading revised 54708
373.201 (Subpart B) Redesignated from Part 1081; heading revised 54708

49 CFR—Continued

61 FR Page

Chapter III—Continued
373.201 Heading revised 54708
374 Heading added 54709
Authority citation added 54709
374.101—374.113 (Subpart A) Redesignated from Part 1055 54709
374.201 (Subpart B) Redesignated from Part 1061 54709
374.301—374.319 (Subpart C) Redesignated from Part 1063 54709
374.401—374.405 (Subpart D) Redesignated from Part 1064 54709
374.501—374.505 (Subpart E) Redesignated from Part 1054 54709
375 Redesignated from Part 1056 54707
376 Redesignated from Part 1057 54707
377 Heading added 54708
Authority citation added 54708
377.101—377.105 (Subpart A) Redesignated from Part 1052 54708
377.201—377.217 (Subpart B) Redesignated from Part 1320; heading revised 54709
378 Redesignated from Part 1008 54707
382 Revised 9553
382.107 Introductory text amended 1843
Amended 37224
383 Authority citation revised 9564, 14679
383.3 Revised 9564
(d) introductory text corrected 14677
(d) heading and introductory text revised; (d)(3) added 14679
383.5 Amended 9566, 14679
383.91 (a) revised 9566
385.17 (a) amended 1843
387 Authority citation revised 54709
387.301—387.323 (Subpart C) Redesignated from Part 1043 54709
Heading revised 54710
387.317 Heading revised 54710
387.401—387.419 (Subpart D) Redesignated from Part 1084; heading revised 54710
387.415 Heading revised 54710
390 Authority citation revised 54710
390.3 Regulation at 59 FR 67554 effective date extended to 1–2–97 42822

49 CFR—Continued

61 FR Page

Chapter III—Continued
390.5 Amended 9566
390.27 Revised 9566
390.50—390.60 (Subpart C) Regulation at 59 FR 67554 effective date extended to 1–2–97 42822
390.401—390.407 (Subpart D) Redesignated from Part 1058 54710
391.2 (d) redesignated as 391.62 13346
Corrected 17253
391.43 (e), (f) and (g) redesignated as (f), (g) and (h); new (e) added; new (f) introductory text and new (h) amended 13347
391.45 (b)(2) revised 13347
391.49 (b) amended 1843
391.62 Redesignated from 391.2(d) and revised 13346
Corrected 17253
391.64 Added 13346
391.85 Amended 9567
391.125 Revised 9567
392.4 Revised 9567
392.5 (a) revised 9567
393.25 (b) amended 1843
393.42 (b)(2) amended 1843
395 Authority citation revised 14679
395.1 (a) revised; (l) through (o) added 14679
395.2 Amended 14679
397 Authority citation revised 20497
Report availability 54744
397.1—397.19 (Subpart A) Heading added 1843
350—399 (Subchapter B) Appendix B amended 1843
Regulation at 59 FR 67556 effective date extended to 1–2–97 42822

1997

(Regulations published from January 1, 1997, through October 1, 1997)

49 CFR

62 FR Page

Chapter II
214 Reconsideration petitions 19234
219 Determination 13349
232 Authority citation revised 294
Reconsideration petitions 30461

49 CFR—Continued

62 FR Page

Chapter II—Continued
232.19 Heading and (a) revised; (h) removed 294
232.21 Added 294
232.23 Added 294
232.25 Added 295
232 Appendix A amended 295

Chapter III
Chapter III Regulatory guide 16370
355 Authority citation revised 37151
355 Appendix A amended 37151
356 Added 32041
365.101 (e) and (f) amended 49940
365.107 (c) and (e)(2) amended 49940
365.205 (d) amended 49940
365.405 (a)(2), (b)(1)(vii), (viii) and (2)(ii) amended 49940
365.409 (a) and (c) amended 49940
365.413 (a) introductory text amended 49940
366 Authority citation revised 49940
366.1 Amended 49940
366.3 Amended 49940
366.6 Amended 49940
367 Authority citation revised 15420
367.1 (a), (b) and (c) amended 15420
367.3 (c) amended 15420
367.4 (a), (b) introductory text, (c)(2), (3), (d) and (h) amended 15420
367.5 (a) introductory text and (b) amended 15420
367.6 (c) amended 15420
367 Appendix A amended 15420
368 Heading and authority citation revised 15420
368.1 Revised 15420
368.2 (a), (b)(1), (2), (c)(2), (d), (e) and (f) revised 15421
368.3 (a) and (c) revised; (d) removed 15421
368.5 Revised 15421
368.6 Amended; heading and (b) introductory text revised; (b)(2) amended; (c) removed 15421
368.7 Revised 15421
369 Removed 38035
370 Added 32042
371 Authority citation revised 15421
371.1 Amended 15421

49 CFR—Continued

62 FR Page

Chapter III—Continued

371.3 (a) introductory text revised; (a)(2) amended; (a)(6) concluding text removed 15421
371.7 Amended 15421
371.10 Amended 15421
372.101 Amended 15421
372.103 Amended 15421
372.105 Removed 15421
372.109 Introductory text amended 49940
372.111 (a) and (b) amended 38036
(b)(8) and (9)(iii) amended 49940
372.113 Removed 38036
372.115 Amended 15421
372.117 (a), (c), (d)(1), (2) and (3) amended 15421
372.201 Introductory text amended 15422
372.203 Introductory text amended 15422
372.205 Introductory text amended 15422
372.207 Introductory text amended 15422
372.209 Introductory text amended 15422
372.211 Introductory text amended 15422
372.213 Introductory text amended 15422
372.215 Introductory text amended 15422
372.217 Introductory text amended 15422
372.219 Introductory text amended 15422
372.221 Introductory text amended 15422
372.223 Introductory text amended 15422
372.225 Introductory text amended 15422
372.227 Introductory text amended 15422
372.229 Introductory text amended 15422
372.231 Introductory text amended 15422
372.233 Introductory text amended 15422
372.235 Introductory text amended 15422
372.237 (a) and (b) amended 15422
372.241 Introductory text amended 15422

49 CFR—Continued

62 FR Page

Chapter III—Continued

372.243 Introductory text amended 15422
372.301—372.303 (Subpart C) Note removed 49940
372.300 Added 15422
372.301 Revised 15422
372.303 Introductory text and (a) revised 15423
373.101 (e) amended 15423
373.103 Amended 15423
373.105 Amended 15423
374.101 Amended 15423
374.103 Amended 15423
374.105 Amended 15423
374.107 Amended 15423
374.109 Amended 15423
374.111 Amended 15423
374.113 (b) amended 15423
374.201 (a) and (c) amended 15423
374.307 (c)(1), (2)(iv) and (g) amended 15423
374.311 (b) amended 15423
374.319 (a) and (b) amended 15423
374.401 (a) introductory text and (3) amended 15423
374.403 (a) and (b) amended 15423
374.405 Amended 15423
374.501 Amended 15423
374.505 (d) amended 15423
375 Authority citation revised 49940
375.2 (a) introductory text amended 49940
(a)(2), (3) and (b)(2) amended 49941
375.3 (a) and (b) amended 49941
375.4 (a) amended 49941
375.5 (a) introductory text amended 49941
375.6 (a) and (b)(4) amended 49941
375.7 (a) introductory text amended 49941
375.8 (a)(1) and (3) amended 49941
375.11 (a) amended 49941
375.12 (a) amended 49941
375.13 (a) amended 49941
375.15 (a) and (b) amended 49941
375.16 (a) introductory text and (b) amended 49941
375.17 (a) and (c) amended 49941
375.18 (a) amended 49941
375.19 Amended 49941
376 Authority citation revised 15423
376.1 Introductory text, (a) and (c) amended 15423

49 CFR—Continued

62 FR Page

Chapter III—Continued

376.2 (a) amended 15424
376.11 Introductory text, (a) and (c)(1) amended 15424
376.12 Introductory text, (b), (c)(3), (4), (j)(1) and (l) amended 15424
376.21 Introductory text and (b) amended 15424
376.22 (a), (c)(2) and (4) amended 15424
376.26 Amended 15424
376.31 (b) and (d)(1) amended 15424
376.42 Amended 15424
377.101 Amended 15424
377.103 Amended 15424
377.105 Amended 15424
377.201 (a) amended 15424
377.205 (d)(3) amended; (e) removed 15424
377.211 Amended 15424
377.213 Removed 15424
377.215 (a) and (b)(1) amended 15424
377.217 Amended 15424
378 Authority citation revised 15424
378.1 Amended 15424
378.2 (a), (b) and (d) amended 15424
378.4 (a) and (d) amended 15424
378.5 (a) amended 15424
(b) and (c) amended 15425
378.6 Amended 15425
379 Added 32044
382.103 (c) revised 1296
382.115 Revised 37151
382.401 (c)(6)(iii) and (iv) amended; (c)(6)(v) removed; (e)(1) revised 37151
383 Authority citation revised 1296
383.3 (b) revised 1296
383.5 Amended 37151
383.51 (b)(2)(ii) and (v) revised; (b)(3)(i), (ii) and (d)(2)(iv) amended 37151
383.111 (a) amended 37151
384.101 Revised 37152
384.301 Revised 37152
384.305 (b) revised (OMB number) 37152
384.309 Revised 37152
385.9 Existing text designated as (a); (b) added; interim; eff. 5–28–97 through 11–28–97 28809

49 CFR—Continued

62 FR Page

Chapter III—Continued

385 Appendix designated as Appendix A; Appendix B added; interim; eff. 5–28–97 through 11–28–97 28809
387 Authority citation revised 16709
387.5 Amended 16709
387.301 (a)(1), (2) and (b) amended 49941
387.303 (b)(1) introductory text, (i), (2) and (4) amended 49941
387.309 (a)(2) and (b) amended 49941
387.311 (a) and (b) amended 49941
387.313 (a)(2), (3), (4) and (d) amended 49941
387.317 Amended 49942
387.321 Amended 49942
387.323 (c) amended 49942
387.403 (a) and (b) amended 49942
387.405 Amended 49942
387.407 (a) amended 49942
387.411 (b) amended 49942
387.413 (a) amended 49942
387.417 (a) and (b) amended 49942
387.419 Amended 49942
389 Authority citation revised 37152
389.1 Revised 37152
389.3 Revised 37152
389.11 Revised 37152
390 Authority citation revised 1296
390.3 (b) removed; (c) through (g) redesignted as (b) through (f) 1296
390.5 Amended 16709, 49942
390.21 (a) amended 49942
390.50—390.60 (Subpart C) Removed 1296
390.401 (a) amended 49942
391.15 (c)(2)(ii) and (iii) revised 37152
391.41 (b)(12) revised; (c) removed 37152
391.43 Amended; (a)(1) designation and (2) removed 37153
391.81—391.125 (Subpart H) Removed 37152
392.4 (a)(1) revised 37153
395.8 (f)(5) revised 16709
350—399 (Subchapter B) Appendix H removed 1296
Appendixes D and E removed 37153

49 CFR—Continued

62 FR
Page

Chapter III—Continued
390 Appendix F Amended 49942