AUTHENTICATED
U.S. GOVERNMENT
INFORMATION
GPO



and tests required to ensure compliance with this part have been properly completed and documented.

(b) *Retention of records.* The manufacturer shall retain the records described in paragraph (a)(1) of this section until it no longer manufactures the article. At that time, copies of these records shall be sent to the Administrator. The manufacturer shall retain the records described in paragraph (a)(2) of this section for a period of at least 2 years.

### § 21.615 FAA inspection.

Upon the request of the Administrator, each manufacturer of an article under a TSO authorization shall allow the Administrator to—

(a) Inspect any article manufactured under that authorization;

(b) Inspect the manufacturer's quality control system;

(c) Witness any tests;

(d) Inspect the manufacturing facilities; and

(e) Inspect the technical data files on that article.

### § 21.617 Issue of letters of TSO design approval: import appliances.

(a) A letter of TSO design approval may be issued for an appliance that is manufactured in a foreign country with which the United States has an agreement for the acceptance of these appliances for export and import and that is to be imported into the United States if—

(1) The country in which the appliance was manufactured certifies that the appliance has been examined, tested, and found to meet the applicable TSO designated in § 21.305(b) or the applicable performance standards of the country in which the appliance was manufactured and any other performance standards the Administrator may prescribe to provide a level of safety equivalent to that provided by the TSO designated in § 21.305(b); and

(2) The manufacturer has submitted one copy of the technical data required in the applicable performance standard through its civil aviation authority.

(b) The letter of TSO design approval will be issued by the Administrator and must list any deviation granted to the manufacturer under § 21.609.

(c) After the Administrator has issued a letter of TSO design approval and the country of manufacture issues a Certificate of Airworthiness for Export as specified in § 21.502(a), the manufacturer shall be authorized to identify the appliance with the TSO marking requirements described in § 21.607(d) and in the applicable TSO. Each appliance must be accompanied by a Certificate of Airworthiness for Export as specified in § 21.502(a) issued by the country of manufacture.

### § 21.619 Noncompliance.

The Administrator may, upon notice, withdraw the TSO authorization or letter of TSO design approval of any manufacturer who identifies with a TSO marking an article not meeting the performance standards of the applicable TSO.

### § 21.621 Transferability and duration.

A TSO authorization or letter of TSO design approval issued under this part is not transferable and is effective until surrendered, withdrawn, or otherwise terminated by the Administrator.

# PART 23—AIRWORTHINESS STANDARDS: NORMAL, UTILITY, ACROBATIC, AND COMMUTER CATEGORY AIRPLANES

SPECIAL FEDERAL AVIATION REGULATIONS

SFAR No. 23
SFAR No. 41 [Note]

## Subpart A—General

Sec.
23.1 Applicability.
23.2 Special retroactive requirements.
23.3 Airplane categories.

## Subpart B—Flight

GENERAL

23.21 Proof of compliance.
23.23 Load distribution limits.
23.25 Weight limits.
23.29 Empty weight and corresponding center of gravity.
23.31 Removable ballast.
23.33 Propeller speed and pitch limits.

PERFORMANCE

23.45 General.
23.49 Stalling period.
23.51 Takeoff speeds.

23.53 Takeoff performance.
23.55 Accelerate–stop distance.
23.57 Takeoff path.
23.59 Takeoff distance and takeoff run.
23.61 Takeoff flight path.
23.63 Climb: general.
23.65 Climb: All engines operating.
23.66 Takeoff climb: One-engine inoperative.
23.67 Climb: one engine inoperative.
23.69 Enroute climb/descent.
23.71 Glide: Single-engine airplanes.
23.73 Reference landing approach speed.
23.75 Landing distance.
23.77 Balked landing.

FLIGHT CHARACTERISTICS

23.141 General.

CONTROLLABILITY AND MANEUVERABILITY

23.143 General.
23.145 Longitudinal control.
23.147 Directional and lateral control.
23.149 Minimum control speed.
23.151 Acrobatic maneuvers.
23.153 Control during landings.
23.155 Elevator control force in maneuvers.
23.157 Rate of roll.

TRIM

23.161 Trim.

STABILITY

23.171 General.
23.173 Static longitudinal stability.
23.175 Demonstration of static longitudinal stability.
23.177 Static directional and lateral stability.
23.181 Dynamic stability.

STALLS

23.201 Wings level stall.
23.203 Turning flight and accelerated turning stalls.
23.207 Stall warning.

SPINNING

23.221 Spinning.

GROUND AND WATER HANDLING CHARACTERISTICS

23.231 Longitudinal stability and control.
23.233 Directional stability and control.
23.235 Operation on unpaved surfaces.
23.237 Operation on water.
23.239 Spray characteristics.

MISCELLANEOUS FLIGHT REQUIREMENTS

23.251 Vibration and buffeting.
23.253 High speed characteristics.

## Subpart C—Structure

GENERAL

23.301 Loads.
23.302 Canard or tandem wing configurations.
23.303 Factor of safety.
23.305 Strength and deformation.
23.307 Proof of structure.

FLIGHT LOADS

23.321 General.
23.331 Symmetrical flight conditions.
23.333 Flight envelope.
23.335 Design airspeeds.
23.337 Limit maneuvering load factors.
23.341 Gust loads factors.
23.343 Design fuel loads.
23.345 High lift devices.
23.347 Unsymmetrical flight conditions.
23.349 Rolling conditions.
23.351 Yawing conditions.
23.361 Engine torque.
23.363 Side load on engine mount.
23.365 Pressurized cabin loads.
23.367 Unsymmetrical loads due to engine failure.
23.369 Rear lift truss.
23.371 Gyroscopic and aerodynamic loads.
23.373 Speed control devices.

CONTROL SURFACE AND SYSTEM LOADS

23.391 Control surface loads.
23.393 Loads parallel to hinge line.
23.395 Control system loads.
23.397 Limit control forces and torques.
23.399 Dual control system.
23.405 Secondary control system.
23.407 Trim tab effects.
23.409 Tabs.
23.415 Ground gust conditions.

HORIZONTAL STABILIZING AND BALANCING SURFACES

23.421 Balancing loads.
23.423 Maneuvering loads.
23.425 Gust loads.
23.427 Unsymmetrical loads.

VERTICAL SURFACES

23.441 Maneuvering loads.
23.443 Gust loads.
23.445 Outboard fins or winglets.

AILERONS AND SPECIAL DEVICES

23.455 Ailerons.
23.459 Special devices.

GROUND LOADS

23.471 General.
23.473 Ground load conditions and assumptions.
23.477 Landing gear arrangement.
23.479 Level landing conditions.
23.481 Tail down landing conditions.
23.483 One-wheel landing conditions.
23.485 Side load conditions.
23.493 Braked roll conditions.
23.497 Supplementary conditions for tail

wheels.
23.499 Supplementary conditions for nose wheels.
23.505 Supplementary conditions for skiplanes.
23.507 Jacking loads.
23.509 Towing loads.
23.511 Ground load; unsymmetrical loads on multiple-wheel units.

WATER LOADS

23.521 Water load conditions.
23.523 Design weights and center of gravity positions.
23.525 Application of loads.
23.527 Hull and main float load factors.
23.529 Hull and main float landing conditions.
23.531 Hull and main float takeoff condition.
23.533 Hull and main float bottom pressures.
23.535 Auxiliary float loads.
23.537 Seawing loads.

EMERGENCY LANDING CONDITIONS

23.561 General.
23.562 Emergency landing dynamic conditions.

FATIGUE EVALUATION

23.571 Metallic pressurized cabin structures.
23.572 Metallic wing, empennage, and associated structures.
23.573 Damage tolerance and fatigue evaluation of structure.
23.574 Metallic damage tolerance and fatigue evaluation of commuter category airplanes.
23.575 Inspections and other procedures.

## Subpart D—Design and Construction

23.601 General.
23.603 Materials and workmanship.
23.605 Fabrication methods.
23.607 Fasteners.
23.609 Protection of structure.
23.611 Accessibility provisions.
23.613 Material strength properties and design values.
23.619 Special factors.
23.621 Casting factors.
23.623 Bearing factors.
23.625 Fitting factors.
23.627 Fatigue strength.
23.629 Flutter.

WINGS

23.641 Proof of strength.

CONTROL SURFACES

23.651 Proof of strength.
23.655 Installation.
23.657 Hinges.
23.659 Mass balance.

CONTROL SYSTEMS

23.671 General.
23.672 Stability augmentation and automatic and power-operated systems.
23.673 Primary flight controls.
23.675 Stops.
23.677 Trim systems.
23.679 Control system locks.
23.681 Limit load static tests.
23.683 Operation tests.
23.685 Control system details.
23.687 Spring devices.
23.689 Cable systems.
23.691 Artificial stall barrier system.
23.693 Joints.
23.697 Wing flap controls.
23.699 Wing flap position indicator.
23.701 Flap interconnection.
23.703 Takeoff warning system.

LANDING GEAR

23.721 General.
23.723 Shock absorption tests.
23.725 Limit drop tests.
23.726 Ground load dynamic tests.
23.727 Reserve energy absorption drop test.
23.729 Landing gear extension and retraction system.
23.731 Wheels.
23.733 Tires.
23.735 Brakes.
23.737 Skis.
23.745 Nose/tail wheel steering.

FLOATS AND HULLS

23.751 Main float buoyancy.
23.753 Main float design.
23.755 Hulls.
23.757 Auxiliary floats.

PERSONNEL AND CARGO ACCOMMODATIONS

23.771 Pilot compartment.
23.773 Pilot compartment view.
23.775 Windshields and windows.
23.777 Cockpit controls.
23.779 Motion and effect of cockpit controls.
23.781 Cockpit control knob shape.
23.783 Doors.
23.785 Seats, berths, litters, safety belts, and shoulder harnesses.
23.787 Baggage and cargo compartments.
23.791 Passenger information signs.
23.803 Emergency evacuation.
23.805 Flightcrew emergency exits.
23.807 Emergency exits.
23.811 Emergency exit marking.
23.812 Emergency lighting.
23.813 Emergency exit access.
23.815 Width of aisle.
23.831 Ventilation.

PRESSURIZATION

23.841 Pressurized cabins.
23.843 Pressurization tests.

FIRE PROTECTION

23.851 Fire extinguishers.
23.853 Passenger and crew compartment interiors.
23.855 Cargo and baggage compartment fire protection.
23.859 Combustion heater fire protection.
23.863 Flammable fluid fire protection.
23.865 Fire protection of flight controls, engine mounts, and other flight structure.

ELECTRICAL BONDING AND LIGHTNING PROTECTION

23.867 Electrical bonding and protection against lightning and static electricity.

MISCELLANEOUS

23.871 Leveling means.

## Subpart E—Powerplant

GENERAL

23.901 Installation.
23.903 Engines.
23.904 Automatic power reserve system.
23.905 Propellers.
23.907 Propeller vibration.
23.909 Turbocharger systems.
23.925 Propeller clearance.
23.929 Engine installation ice protection.
23.933 Reversing systems.
23.934 Turbojet and turbofan engine thrust reverser systems tests.
23.937 Turbopropeller-drag limiting systems.
23.939 Powerplant operating characteristics.
23.943 Negative acceleration.

FUEL SYSTEM

23.951 General.
23.953 Fuel system independence.
23.954 Fuel system lightning protection.
23.955 Fuel flow.
23.957 Flow between interconnected tanks.
23.959 Unusable fuel supply.
23.961 Fuel system hot weather operation.
23.963 Fuel tanks: General.
23.965 Fuel tank tests.
23.967 Fuel tank installation.
23.969 Fuel tank expansion space.
23.971 Fuel tank sump.
23.973 Fuel tank filler connection.
23.975 Fuel tank vents and carburetor vapor vents.
23.977 Fuel tank outlet.
23.979 Pressure fueling systems.

FUEL SYSTEM COMPONENTS

23.991 Fuel pumps.
23.993 Fuel system lines and fittings.
23.994 Fuel system components.
23.995 Fuel valves and controls.
23.997 Fuel strainer or filter.
23.999 Fuel system drains.
23.1001 Fuel jettisoning system.

OIL SYSTEM

23.1011 General.
23.1013 Oil tanks.
23.1015 Oil tank tests.
23.1017 Oil lines and fittings.
23.1019 Oil strainer or filter.
23.1021 Oil system drains.
23.1023 Oil radiators.
23.1027 Propeller feathering system.

COOLING

23.1041 General.
23.1043 Cooling tests.
23.1045 Cooling test procedures for turbine engine powered airplanes.
23.1047 Cooling test procedures for reciprocating engine powered airplanes.

LIQUID COOLING

23.1061 Installation.
23.1063 Coolant tank tests.

INDUCTION SYSTEM

23.1091 Air induction system.
23.1093 Induction system icing protection.
23.1095 Carburetor deicing fluid flow rate.
23.1097 Carburetor deicing fluid system capacity.
23.1099 Carburetor deicing fluid system detail design.
23.1101 Induction air preheater design.
23.1103 Induction system ducts.
23.1105 Induction system screens.
23.1107 Induction system filters.
23.1109 Turbocharger bleed air system.
23.1111 Turbine engine bleed air system.

EXHAUST SYSTEM

23.1121 General.
23.1123 Exhaust system.
23.1125 Exhaust heat exchangers.

POWERPLANT CONTROLS AND ACCESSORIES

23.1141 Powerplant controls: General.
23.1142 Auxiliary power unit controls.
23.1143 Engine controls.
23.1145 Ignition switches.
23.1147 Mixture controls.
23.1149 Propeller speed and pitch controls.
23.1153 Propeller feathering controls.
23.1155 Turbine engine reverse thrust and propeller pitch settings below the flight regime.
23.1157 Carburetor air temperature controls.
23.1163 Powerplant accessories.
23.1165 Engine ignition systems.

POWERPLANT FIRE PROTECTION

23.1181 Designated fire zones; regions included.
23.1182 Nacelle areas behind firewalls.
23.1183 Lines, fittings, and components.
23.1189 Shutoff means.
23.1191 Firewalls.

23.1192 Engine accessory compartment diaphragm.
23.1193 Cowling and nacelle.
23.1195 Fire extinguishing systems.
23.1197 Fire extinguishing agents.
23.1199 Extinguishing agent containers.
23.1201 Fire extinguishing systems materials.
23.1203 Fire detector system.

## Subpart F—Equipment

GENERAL

23.1301 Function and installation.
23.1303 Flight and navigation instruments.
23.1305 Powerplant instruments.
23.1307 Miscellaneous equipment.
23.1309 Equipment, systems, and installations.

INSTRUMENTS: INSTALLATION

23.1311 Electronic display instrument systems.
23.1321 Arrangement and visibility.
23.1322 Warning, caution, and advisory lights.
23.1323 Airspeed indicating system.
23.1325 Static pressure system.
23.1326 Pilot heat indication systems.
23.1327 Magnetic direction indicator.
23.1329 Automatic pilot system.
23.1331 Instruments using a power source.
23.1335 Flight director systems.
23.1337 Powerplant instruments installation.

ELECTRICAL SYSTEMS AND EQUIPMENT

23.1351 General.
23.1353 Storage battery design and installation.
23.1357 Circuit protective devices.
23.1359 Electrical system fire protection.
23.1361 Master switch arrangement.
23.1365 Electric cables and equipment.
23.1367 Switches.

LIGHTS

23.1381 Instrument lights.
23.1383 Taxi and landing lights.
23.1385 Position light system installation.
23.1387 Position light system dihedral angles.
23.1389 Position light distribution and intensities.
23.1391 Minimum intensities in the horizontal plane of position lights.
23.1393 Minimum intensities in any vertical plane of position lights.
23.1395 Maximum intensities in overlapping beams of position lights.
23.1397 Color specifications.
23.1399 Riding light.
23.1401 Anticollision light system.

SAFETY EQUIPMENT

23.1411 General.
23.1415 Ditching equipment.
23.1416 Pneumatic de-icer boot system.
23.1419 Ice protection.

MISCELLANEOUS EQUIPMENT

23.1431 Electronic equipment.
23.1435 Hydraulic systems.
23.1437 Accessories for multiengine airplanes.
23.1438 Pressurization and pneumatic systems.
23.1441 Oxygen equipment and supply.
23.1443 Minimum mass flow of supplemental oxygen.
23.1445 Oxygen distribution system.
23.1447 Equipment standards for oxygen dispensing units.
23.1449 Means for determining use of oxygen.
23.1450 Chemical oxygen generators.
23.1451 Fire protection for oxygen equipment.
23.1453 Protection of oxygen equipment from rupture.
23.1457 Cockpit voice recorders.
23.1459 Flight recorders.
23.1461 Equipment containing high energy rotors.

## Subpart G—Operating Limitations and Information

23.1501 General.
23.1505 Airspeed limitations.
23.1507 Operating maneuvering speed.
23.1511 Flap extended speed.
23.1513 Minimum control speed.
23.1519 Weight and center of gravity.
23.1521 Powerplant limitations.
23.1522 Auxiliary power unit limitations.
23.1523 Minimum flight crew.
23.1524 Maximum passenger seating configuration.
23.1525 Kinds of operation.
23.1527 Maximum operating altitude.
23.1529 Instructions for Continued Airworthiness.

MARKINGS AND PLACARDS

23.1541 General.
23.1543 Instrument markings: General.
23.1545 Airspeed indicator.
23.1547 Magnetic direction indicator.
23.1549 Powerplant and auxiliary power unit instruments.
23.1551 Oil quantity indicator.
23.1553 Fuel quantity indicator.
23.1555 Control markings.
23.1557 Miscellaneous markings and placards.
23.1559 Operating limitations placard.
23.1561 Safety equipment.
23.1563 Airspeed placards.
23.1567 Flight maneuver placard.

AIRPLANE FLIGHT MANUAL AND APPROVED MANUAL MATERIAL

23.1581 General.
23.1583 Operating limitations.
23.1585 Operating procedures.
23.1587 Performance information.
23.1589 Loading information.

APPENDIX A TO PART 23—SIMPLIFIED DESIGN LOAD CRITERIA
APPENDIX B TO PART 23 [RESERVED]
APPENDIX C TO PART 23—BASIC LANDING CONDITIONS
APPENDIX D TO PART 23—WHEEL SPIN-UP AND SPRING-BACK LOADS
APPENDIX E TO PART 23 [RESERVED]
APPENDIX F TO PART 23—TEST PROCEDURE
APPENDIX G TO PART 23—INSTRUCTIONS FOR CONTINUED AIRWORTHINESS
APPENDIX H TO PART 23—INSTALLATION OF AN AUTOMATIC POWER RESERVE (APR) SYSTEM
APPENDIX I TO PART 23—SEAPLANE LOADS

AUTHORITY: 49 U.S.C. 106(g), 40113, 44701–44702, 44704.

SOURCE: Docket No. 4080, 29 FR 17955, Dec. 18. 1964; 30 FR 258, Jan. 9, 1965, unless otherwise noted.

## SPECIAL FEDERAL AVIATION REGULATION NO. 23

1. *Applicability*. An applicant is entitled to a type certificate in the normal category for a reciprocating or turbopropeller multiengine powered small airplane that is to be certificated to carry more than 10 occupants and that is intended for use in operations under Part 135 of the Federal Aviation Regulations if he shows compliance with the applicable requirements of Part 23 of the Federal Aviation Regulations, as supplemented or modified by the additional airworthiness requirements of this regulation.

2. *References.* Unless otherwise provided, all references in this regulation to specific sections of Part 23 of the Federal Aviation Regulations are those sections of Part 23 in effect on March 30, 1967.

### FLIGHT REQUIREMENTS

3. *General.* Compliance must be shown with the applicable requirements of Subpart B of Part 23 of the Federal Aviation Regulations in effect on March 30, 1967, as supplemented or modified in sections 4 through 10 of this regulation.

### PERFORMANCE

4. *General.* (a) Unless otherwise prescribed in this regulation, compliance with each applicable performance requirement in sections 4 through 7 of this regulation must be shown for ambient atmospheric conditions and still air.

(b) The performance must correspond to the propulsive thrust available under the particular ambient atmospheric conditions and the particular flight condition. The available propulsive thrust must correspond to engine power or thrust, not exceeding the approved power or thrust less—

(1) Installation losses; and

(2) The power or equivalent thrust absorbed by the accessories and services appropriate to the particular ambient atmospheric conditions and the particular flight condition.

(c) Unless otherwise prescribed in this regulation, the applicant must select the takeoff, en route, and landing configurations for the airplane.

(d) The airplane configuration may vary with weight, altitude, and temperature, to the extent they are compatible with the operating procedures required by paragraph (e) of this section.

(e) Unless otherwise prescribed in this regulation, in determining the critical engine inoperative takeoff performance, the accelerate-stop distance, takeoff distance, changes in the airplane's configuration, speed, power, and thrust, must be made in accordance with procedures established by the applicant for operation in service.

(f) Procedures for the execution of balked landings must be established by the applicant and included in the Airplane Flight Manual.

(g) The procedures established under paragraphs (e) and (f) of this section must—

(1) Be able to be consistently executed in service by a crew of average skill;

(2) Use methods or devices that are safe and reliable; and

(3) Include allowance for any time delays, in the execution of the procedures, that may reasonably be expected in service.

5. *Takeoff*—(a) *General.* The takeoff speeds described in paragraph (b), the accelerate-stop distance described in paragraph (c), and the takeoff distance described in paragraph (d), must be determined for—

(1) Each weight, altitude, and ambient temperature within the operational limits selected by the applicant;

(2) The selected configuration for takeoff;

(3) The center of gravity in the most unfavorable position;

(4) The operating engine within approved operating limitation; and

(5) Takeoff data based on smooth, dry, hard-surface runway.

(b) *Takeoff speeds.* (1) The decision speed $V_1$ is the calibrated airspeed on the ground at which, as a result of engine failure or other reasons, the pilot is assumed to have made a decision to continue or discontinue the takeoff. The speed $V_1$ must be selected by the applicant but may not be less than—

(i) 1.10 $V_{s1}$;

(ii) 1.10 $V_{MC}$;

(iii) A speed that permits acceleration to $V_1$ and stop in accordance with paragraph (c) allowing credit for an overrun distance equal to that required to stop the airplane from a ground speed of 35 knots utilizing maximum braking; or

(iv) A speed at which the airplane can be rotated for takeoff and shown to be adequate to safely continue the takeoff, using normal piloting skill, when the critical engine is suddenly made inoperative.

(2) Other essential takeoff speeds necessary for safe operation of the airplane must be determined and shown in the Airplane Flight Manual.

(c) *Accelerate-stop distance.* (1) The accelerate-stop distance is the sum of the distances necessary to—

(i) Accelerate the airplane from a standing start to $V_1$; and

(ii) Decelerate the airplane from $V_1$ to a speed not greater than 35 knots, assuming that in the case of engine failure, failure of the critical engine is recognized by the pilot at the speed $V_1$. The landing gear must remain in the extended position and maximum braking may be utilized during deceleration.

(2) Means other than wheel brakes may be used to determine the accelerate-stop distance if that means is available with the critical engine inoperative and—

(i) Is safe and reliable;

(ii) Is used so that consistent results can be expected under normal operating conditions; and

(iii) Is such that exceptional skill is not required to control the airplane.

(d) *All engines operating takeoff distance.* The all engine operating takeoff distance is the horizontal distance required to takeoff and climb to a height of 50 feet above the takeoff surface according to procedures in FAR 23.51(a).

(e) *One-engine-inoperative takeoff.* The maximum weight must be determined for each altitude and temperature within the operational limits established for the airplane, at which the airplane has takeoff capability after failure of the critical engine at or above $V_1$ determined in accordance with paragraph (b) of this section. This capability may be established—

(1) By demonstrating a measurably positive rate of climb with the airplane in the takeoff configuration, landing gear extended; or

(2) By demonstrating the capability of maintaining flight after engine failure utilizing procedures prescribed by the applicant.

6. *Climb*—(a) *Landing climb: All-engines-operating.* The maximum weight must be determined with the airplane in the landing configuration, for each altitude, and ambient temperature within the operational limits established for the airplane and with the most unfavorable center of gravity and out-of-ground effect in free air, at which the steady gradient of climb will not be less than 3.3 percent, with:

(1) The engines at the power that is available 8 seconds after initiation of movement of the power or thrust controls from the mimimum flight idle to the takeoff position.

(2) A climb speed not greater than the approach speed established under section 7 of this regulation and not less than the greater of $1.05_{MC}$ or $1.10V_{S1}$.

(b) *En route climb, one-engine-inoperative.* (1) the maximum weight must be determined with the airplane in the en route configuration, the critical engine inoperative, the remaining engine at not more than maximum continuous power or thrust, and the most unfavorable center of gravity, at which the gradient at climb will be not less than—

(i) 1.2 percent (or a gradient equivalent to 0.20 $V_{so}2$, if greater) at 5,000 feet and an ambient temperature of 41° F. or

(ii) 0.6 percent (or a gradient equivalent to 0.01 $V_{so}2$, if greater) at 5,000 feet and ambient temperature of 81° F.

(2) The minimum climb gradient specified in subdivisions (i) and (ii) of subparagraph (1) of this paragraph must vary linearly between 41° F. and 81° F. and must change at the same rate up to the maximum operational temperature approved for the airplane.

7. *Landing.* The landing distance must be determined for standard atmosphere at each weight and altitude in accordance with FAR 23.75(a), except that instead of the gliding approach specified in FAR 23.75(a)(1), the landing may be preceded by a steady approach down to the 50-foot height at a gradient of descent not greater than 5.2 percent (3°) at a calibrated airspeed not less than $1.3_{s1}$.

TRIM

8. *Trim*—(a) *Lateral and directional trim.* The airplane must maintain lateral and directional trim in level flight at a speed of $V_h$ or $V_{MO}/M_{MO,}$ whichever is lower, with landing gear and wing flaps retracted.

(b) *Longitudinal trim.* The airplane must maintain longitudinal trim during the following conditions, except that it need not maintain trim at a speed greater than $V_{MO}$ $M_{MO:}$

(1) In the approach conditions specified in FAR 23.161(c)(3) through (5), except that instead of the speeds specified therein, trim must be maintained with a stick force of not more than 10 pounds down to a speed used in showing compliance with section 7 of this regulation or 1.4 $V^s{}_1$ whichever is lower.

(2) In level flight at any speed from $V_H$ or $V_{MO}/M_{MO}$, whichever is lower, to either $Vx$ or 1.4 $V_{s1}$, with the landing gear and wing flaps retracted.

STABILITY

9. *Static longitudinal stability.* (a) In showing compliance with the provisions of FAR

23.175(b) and with paragraph (b) of this section, the airspeed must return to within ±7½ percent of the trim speed.

(b) *Cruise stability*. The stick force curve must have a stable slope for a speed range of ±50 knots from the trim speed except that the speeds need not exceed $V_{FC}/M_{FC}$ or be less than 1.4 $V_{s1}$. This speed range will be considered to begin at the outer extremes of the friction band and the stick force may not exceed 50 pounds with—

(i) Landing gear retracted;

(ii) Wing flaps retracted;

(iii) The maximum cruising power as selected by the applicant as an operating limitation for turbine engines or 75 percent of maximum continuous power for reciprocating engines except that the power need not exceed that required at $V_{MO}/M_{MO}$;

(iv) Maximum takeoff weight; and

(v) The airplane trimmed for level flight with the power specified in subparagraph (iii) of this paragraph.

$V_{FC}/M_{FC}$ may not be less than a speed midway between $V_{MO}/M_{MO}$ and $V_{DF}/M_{DF}$, except that, for altitudes where Mach number is the limiting factor, $M_{FC}$ need not exceed the Mach number at which effective speed warning occurs.

(c) *Climb stability*. *For turbopropeller powered airplanes only*. In showing compliance with FAR 23.175(a), an applicant must in lieu of the power specified in FAR 23.175(a)(4), use the maximum power or thrust selected by the applicant as an operating limitation for use during climb at the best rate of climb speed except that the speed need not be less than 1.4 $V_{s1}$.

STALLS

10. *Stall warning*. If artificial stall warning is required to comply with the requirements of FAR 23.207, the warning device must give clearly distinguishable indications under expected conditions of flight. The use of a visual warning device that requires the attention of the crew within the cockpit is not acceptable by itself.

CONTROL SYSTEMS

11. *Electric trim tabs*. The airplane must meet the requirements of FAR 23.677 and in addition it must be shown that the airplane is safely controllable and that a pilot can perform all the maneuvers and operations necessary to effect a safe landing following any probable electric trim tab runaway which might be reasonably expected in service allowing for appropriate time delay after pilot recognition of the runaway. This demonstration must be conducted at the critical airplane weights and center of gravity positions.

INSTRUMENTS: INSTALLATION

12. *Arrangement and visibility*. Each instrument must meet the requirements of FAR 23.1321 and in addition—

(a) Each flight, navigation, and powerplant instrument for use by any pilot must be plainly visible to him from his station with the minimum practicable deviation from his normal position and line of vision when he is looking forward along the flight path.

(b) The flight instruments required by FAR 23.1303 and by the applicable operating rules must be grouped on the instrument panel and centered as nearly as practicable about the vertical plane of each pilot's forward vision. In addition—

(1) The instrument that most effectively indicates the attitude must be on the panel in the top center position;

(2) The instrument that most effectively indicates airspeed must be adjacent to and directly to the left of the instrument in the top center position;

(3) The instrument that most effectively indicates altitude must be adjacent to and directly to the right of the instrument in the top center position; and

(4) The instrument that most effectively indicates direction of flight must be adjacent to and directly below the instrument in the top center position.

13. *Airspeed indicating system*. Each airspeed indicating system must meet the requirements of FAR 23.1323 and in addition—

(a) Airspeed indicating instruments must be of an approved type and must be calibrated to indicate true airspeed at sea level in the standard atmosphere with a mimimum practicable instrument calibration error when the corresponding pilot and static pressures are supplied to the instruments.

(b) The airspeed indicating system must be calibrated to determine the system error, i.e., the relation between IAS and CAS, in flight and during the accelerate takeoff ground run. The ground run calibration must be obtained between 0.8 of the mimimum value of $V_1$ and 1.2 times the maximum value of $V_1$, considering the approved ranges of altitude and weight. The ground run calibration will be determined assuming an engine failure at the mimimum value of $V_1$.

(c) The airspeed error of the installation excluding the instrument calibration error, must not exceed 3 percent or 5 knots whichever is greater, throughout the speed range from $V_{MO}$ to $1.3S_1$ with flaps retracted and from 1.3 $VS_O$ to $V_{FE}$ with flaps in the landing position.

(d) Information showing the relationship between IAS and CAS must be shown in the Airplane Flight Manual.

14. *Static air vent system*. The static air vent system must meet the requirements of FAR 23.1325. The altimeter system calibration

must be determined and shown in the Airplane Flight Manual.

OPERATING LIMITATIONS AND INFORMATION

15. *Maximum operating limit speed* $V_{MO}/M_{MO}$. Instead of establishing operating limitations based on $V_{ME}$ and $V_{NO}$, the applicant must establish a maximum operating limit speed $V_{MO}/M_{MO}$ in accordance with the following:

(a) The maximum operating limit speed must not exceed the design cruising speed $Vc$ and must be sufficiently below $V_D/M_D$ or $V_{DF}$ $M_{DF}$ to make it highly improbable that the latter speeds will be inadvertently exceeded in flight.

(b) The speed $Vmo$ must not exceed 0.8 $V_D$ $M_D$ or 0.8 $V_{DF}/M_{DF}$ unless flight demonstrations involving upsets as specified by the Administrator indicates a lower speed margin will not result in speeds exceeding $V_D/M_D$ or $V_{DF}$. Atmospheric variations, horizontal gusts, and equipment errors, and airframe production variations will be taken into account.

16. *Minimum flight crew*. In addition to meeting the requirements of FAR 23.1523, the applicant must establish the minimum number and type of qualified flight crew personnel sufficient for safe operation of the airplane considering—

(a) Each kind of operation for which the applicant desires approval;

(b) The workload on each crewmember considering the following:

(1) Flight path control.

(2) Collision avoidance.

(3) Navigation.

(4) Communications.

(5) Operation and monitoring of all essential aircraft systems.

(6) Command decisions; and

(c) The accessibility and ease of operation of necessary controls by the appropriate crewmember during all normal and emergency operations when at his flight station.

17. *Airspeed indicator*. The airspeed indicator must meet the requirements of FAR 23.1545 except that, the airspeed notations and markings in terms of $V_{NO}$ and $V_{NE}$ must be replaced by the $V_{MO}/M_{MO}$ notations. The airspeed indicator markings must be easily read and understood by the pilot. A placard adjacent to the airspeed indicator is an acceptable means of showing compliance with the requirements of FAR 23.1545(c).

AIRPLANE FLIGHT MANUAL

18. *General*. The Airplane Flight Manual must be prepared in accordance with the requirements of FARs 23.1583 and 23.1587, and in addition the operating limitations and performance information set forth in sections 19 and 20 must be included.

19. *Operating limitations*. The Airplane Flight Manual must include the following limitations—

(a) *Airspeed limitations*. (1) The maximum operating limit speed $V_{MO}/M_{MO}$ and a statement that this speed limit may not be deliberately exceeded in any regime of flight (climb, cruise, or descent) unless a higher speed is authorized for flight test or pilot training;

(2) If an airspeed limitation is based upon compressibility effects, a statement to this effect and information as to any symptoms, the probable behavior of the airplane, and the recommended recovery procedures; and

(3) The airspeed limits, shown in terms of $V_{MO}/M_{MO}$ instead of $V_{NO}$ and $V_{NE}$.

(b) *Takeoff weight limitations*. The maximum takeoff weight for each airport elevation, ambient temperature, and available takeoff runway length within the range selected by the applicant. This weight may not exceed the weight at which:

(1) The all-engine operating takeoff distance determined in accordance with section 5(d) or the accelerate-stop distance determined in accordance with section 5(c), which ever is greater, is equal to the available runway length;

(2) The airplane complies with the one-engine-inoperative takeoff requirements specified in section 5(e); and

(3) The airplane complies with the one-engine-inoperative en route climb requirements specified in section 6(b), assuming that a standard temperature lapse rate exists from the airport elevation to the altitude of 5,000 feet, except that the weight may not exceed that corresponding to a temperature of 41° F at 5,000 feet.

20. *Performance information*. The Airplane Flight Manual must contain the performance information determined in accordance with the provisions of the performance requirements of this regulation. The information must include the following:

(a) Sufficient information so that the takeoff weight limits specified in section 19(b) can be determined for all temperatures and altitudes within the operation limitations selected by the applicant.

(b) The conditions under which the performance information was obtained, including the airspeed at the 50-foot height used to determine landing distances.

(c) The performance information (determined by extrapolation and computed for the range of weights between the maximum landing and takeoff weights) for—

(1) Climb in the landing configuration; and

(2) Landing distance.

(d) Procedure established under section 4 of this regulation related to the limitations and information required by this section in the form of guidance material including any relevant limitations or information.

(e) An explanation of significant or unusual flight or ground handling characteristics of the airplane.

(f) Airspeeds, as indicated airspeeds, corresponding to those determined for takeoff in accordance with section 5(b).

21. *Maximum operating altitudes.* The maximum operating altitude to which operation is permitted, as limited by flight, structural, powerplant, functional, or equipment characteristics, must be specified in the Airplane Flight Manual.

22. *Stowage provision for Airplane Flight Manual.* Provision must be made for stowing the Airplane Flight Manual in a suitable fixed container which is readily accessible to the pilot.

23. *Operating procedures.* Procedures for restarting turbine engines in flight (including the effects of altitude) must be set forth in the Airplane Flight Manual.

AIRFRAME REQUIREMENTS

FLIGHT LOADS

24. *Engine torque.* (a) Each turbopropeller engine mount and its supporting structure must be designed for the torque effects of—

(1) The conditions set forth in FAR 23.361(a).

(2) The limit engine torque corresponding to takeoff power and propeller speed, multiplied by a factor accounting for propeller control system malfunction, including quick feathering action, simultaneously with 1 *g* level flight loads. In the absence of a rational analysis, a factor of 1.6 must be used.

(b) The limit torque is obtained by multiplying the mean torque by a factor of 1.25.

25. *Turbine engine gyroscopic loads.* Each turbopropeller engine mount and its supporting structure must be designed for the gyroscopic loads that result, with the engines at maximum continuous r.p.m., under either—

(a) The conditions prescribed in FARs 23.351 and 23.423; or

(b) All possible combinations of the following:

(1) A yaw velocity of 2.5 radius per second.

(2) A pitch velocity of 1.0 radians per second.

(3) A normal load factor of 2.5.

(4) Maximum continuous thrust.

26. *Unsymmetrical loads due to engine failure.* (a) Turbopropeller powered airplanes must be designed for the unsymmetrical loads resulting from the failure of the critical engine including the following conditions in combination with a single malfunction of the propeller drag limiting system, considering the probable pilot corrective action on the flight controls.

(1) At speeds between $V_{MC}$ and $V_D$, the loads resulting from power failure because of fuel flow interruption are considered to be limit loads.

(2) At speeds between $V_{MC}$ and $V_C$, the loads resulting from the disconnection of the engine compressor from the turbine or from loss of the turbine blades are considered to be ultimate loads.

(3) The time history of the thrust decay and drag buildup occurring as a result of the prescribed engine failures must be substantiated by test or other data applicable to the particular engine-propeller combination.

(4) The timing and magnitude of the probable pilot corrective action must be conservatively estimated, considering the characteristics of the particular engine-propeller-airplane combination.

(b) Pilot corrective action may be assumed to be initiated at the time maximum yawing velocity is reached, but not earlier than two seconds after the engine failure. The magnitude of the corrective action may be based on the control forces specified in FAR 23.397 except that lower forces may be assumed where it is shown by analysis or test that these forces can control the yaw and roll resulting from the prescribed engine failure conditions.

GROUND LOADS

27. *Dual wheel landing gear units.* Each dual wheel landing gear unit and its supporting structure must be shown to comply with the following:

(a) *Pivoting.* The airplane must be assumed to pivot about one side of the main gear with the brakes on that side locked. The limit vertical load factor must be 1.0 and the coefficient of friction 0.8. This condition need apply only to the main gear and its supporting structure.

(b) *Unequal tire inflation.* A 60–40 percent distribution of the loads established in accordance with FAR 23.471 through FAR 23.483 must be applied to the dual wheels.

(c) *Flat tire.* (1) Sixty percent of the loads specified in FAR 23.471 through FAR 23.483 must be applied to either wheel in a unit.

(2) Sixty percent of the limit drag and side loads and 100 percent of the limit vertical load established in accordance with FARs 23.493 and 23.485 must be applied to either wheel in a unit except that the vertical load need not exceed the maximum vertical load in paragraph (c)(1) of this section.

FATIGUE EVALUATION

28. *Fatigue evaluation of wing and associated structure.* Unless it is shown that the structure, operating stress levels, materials, and expected use are comparable from a fatigue standpoint to a similar design which has had substantial satisfactory service experience, the strength, detail design, and the fabrication of those parts of the wing, wing carry-through, and attaching structure whose failure would be catastrophic must be evaluated under either—

(a) A fatigue strength investigation in which the structure is shown by analysis,

tests, or both to be able to withstand the repeated loads of variable magnitude expected in service; or

(b) A fail-safe strength investigation in which it is shown by analysis, tests, or both that catastrophic failure of the structure is not probable after fatigue, or obvious partial failure, of a principal structural element, and that the remaining structure is able to withstand a static ultimate load factor of 75 percent of the critical limit load factor at $V_c$. These loads must be multiplied by a factor of 1.15 unless the dynamic effects of failure under static load are otherwise considered.

DESIGN AND CONSTRUCTION

29. *Flutter.* For Multiengine turbopropeller powered airplanes, a dynamic evaluation must be made and must include—

(a) The significant elastic, inertia, and aerodynamic forces associated with the rotations and displacements of the plane of the propeller; and

(b) Engine-propeller-nacelle stiffness and damping variations appropriate to the particular configuration.

LANDING GEAR

30. *Flap operated landing gear warning device.* Airplanes having retractable landing gear and wing flaps must be equipped with a warning device that functions continuously when the wing flaps are extended to a flap position that activates the warning device to give adequate warning before landing, using normal landing procedures, if the landing gear is not fully extended and locked. There may not be a manual shut off for this warning device. The flap position sensing unit may be installed at any suitable location. The system for this device may use any part of the system (including the aural warning device) provided for other landing gear warning devices.

PERSONNEL AND CARGO ACCOMMODATIONS

31. *Cargo and baggage compartments.* Cargo and baggage compartments must be designed to meet the requirements of FAR 23.787 (a) and (b), and in addition means must be provided to protect passengers from injury by the contents of any cargo or baggage compartment when the ultimate forward inertia force is 9*g*.

32. *Doors and exits.* The airplane must meet the requirements of FAR 23.783 and FAR 23.807 (a)(3), (b), and (c), and in addition:

(a) There must be a means to lock and safeguard each external door and exit against opening in flight either inadvertently by persons, or as a result of mechanical failure. Each external door must be operable from both the inside and the outside.

(b) There must be means for direct visual inspection of the locking mechanism by crewmembers to determine whether external doors and exits, for which the initial opening movement is outward, are fully locked. In addition, there must be a visual means to signal to crewmembers when normally used external doors are closed and fully locked.

(c) The passenger entrance door must qualify as a floor level emergency exit. Each additional required emergency exit except floor level exits must be located over the wing or must be provided with acceptable means to assist the occupants in descending to the ground. In addition to the passenger entrance door:

(1) For a total seating capacity of 15 or less, an emergency exit as defined in FAR 23.807(b) is required on each side of the cabin.

(2) For a total seating capacity of 16 through 23, three emergency exits as defined in 23.807(b) are required with one on the same side as the door and two on the side opposite the door.

(d) An evacuation demonstration must be conducted utilizing the maximum number of occupants for which certification is desired. It must be conducted under simulated night conditions utilizing only the emergency exits on the most critical side of the aircraft. The participants must be representative of average airline passengers with no prior practice or rehearsal for the demonstration. Evacuation must be completed within 90 seconds.

(e) Each emergency exit must be marked with the word ''Exit'' by a sign which has white letters 1 inch high on a red background 2 inches high, be self-illuminated or independently internally electrically illuminated, and have a minimum luminescence (brightness) of at least 160 microlamberts. The colors may be reversed if the passenger compartment illumination is essentially the same.

(f) Access to window type emergency exits must not be obstructed by seats or seat backs.

(g) The width of the main passenger aisle at any point between seats must equal or exceed the values in the following table.

| Total seating capacity | Minimum main passenger aisle width | |
|---|---|---|
| | Less than 25 inches from floor | 25 inches and more from floor |
| 10 through 23 ..... | 9 inches ..... | 15 inches. |

MISCELLANEOUS

33. *Lightning strike protection.* Parts that are electrically insulated from the basic airframe must be connected to it through lightning arrestors unless a lightning strike on the insulated part—

(a) Is improbable because of shielding by other parts; or

(b) Is not hazardous.

34. *Ice protection.* If certification with ice protection provisions is desired, compliance with the following requirements must be shown:

(a) The recommended procedures for the use of the ice protection equipment must be set forth in the Airplane Flight Manual.

(b) An analysis must be performed to establish, on the basis of the airplane's operational needs, the adequacy of the ice protection system for the various components of the airplane. In addition, tests of the ice protection system must be conducted to demonstrate that the airplane is capable of operating safely in continuous maximum and intermittent maximum icing conditions as described in FAR 25, appendix C.

(c) Compliance with all or portions of this section may be accomplished by reference, where applicable because of similarity of the designs, to analysis and tests performed by the applicant for a type certificated model.

35. *Maintenance information.* The applicant must make available to the owner at the time of delivery of the airplane the information he considers essential for the proper maintenance of the airplane. That information must include the following:

(a) Description of systems, including electrical, hydraulic, and fuel controls.

(b) Lubrication instructions setting forth the frequency and the lubricants and fluids which are to be used in the various systems.

(c) Pressures and electrical loads applicable to the various systems.

(d) Tolerances and adjustments necessary for proper functioning.

(e) Methods of leveling, raising, and towing.

(f) Methods of balancing control surfaces.

(g) Identification of primary and secondary structures.

(h) Frequency and extent of inspections necessary to the proper operation of the airplane.

(i) Special repair methods applicable to the airplane.

(j) Special inspection techniques, including those that require X-ray, ultrasonic, and magnetic particle inspection.

(k) List of special tools.

## PROPULSION

### GENERAL

36. *Vibration characteristics.* For turbopropeller powered airplanes, the engine installation must not result in vibration characteristics of the engine exceeding those established during the type certification of the engine.

37. *In-flight restarting of engine.* If the engine on turbopropeller powered airplanes cannot be restarted at the maximum cruise altitude, a determination must be made of the altitude below which restarts can be consistently accomplished. Restart information must be provided in the Airplane Flight Manual.

38. *Engines*—(a) *For turbopropeller powered airplanes.* The engine installation must comply with the following requirements:

(1) *Engine isolation.* The powerplants must be arranged and isolated from each other to allow operation, in at least one configuration, so that the failure or malfunction of any engine, or of any system that can affect the engine, will not—

(i) Prevent the continued safe operation of the remaining engines; or

(ii) Require immediate action by any crewmember for continued safe operation.

(2) *Control of engine rotation.* There must be a means to individually stop and restart the rotation of any engine in flight except that engine rotation need not be stopped if continued rotation could not jeopardize the safety of the airplane. Each component of the stopping and restarting system on the engine side of the firewall, and that might be exposed to fire, must be at least fire resistant. If hydraulic propeller feathering systems are used for this purpose, the feathering lines must be at least fire resistant under the operating conditions that may be expected to exist during feathering.

(3) *Engine speed and gas temperature control devices.* The powerplant systems associated with engine control devices, systems, and instrumentation must provide reasonable assurance that those engine operating limitations that adversely affect turbine rotor structural integrity will not be exceeded in service.

(b) *For reciprocating-engine powered airplanes.* To provide engine isolation, the powerplants must be arranged and isolated from each other to allow operation, in at least one configuration, so that the failure or malfunction of any engine, or of any system that can affect that engine, will not—

(1) Prevent the continued safe operation of the remaining engines; or

(2) Require immediate action by any crewmember for continued safe operation.

39. *Turbopropeller reversing systems.* (a) Turbopropeller reversing systems intended for ground operation must be designed so that no single failure or malfunction of the system will result in unwanted reverse thrust under any expected operating condition. Failure of structural elements need not be considered if the probability of this kind of failure is extremely remote.

(b) Turbopropeller reversing systems intended for in-flight use must be designed so that no unsafe condition will result during normal operation of the system, or from any failure (or reasonably likely combination of failures) of the reversing system, under any anticipated condition of operation of the airplane. Failure of structural elements need not be considered if the probability of this kind of failure is extremely remote.

(c) Compliance with this section may be shown by failure analysis, testing, or both for propeller systems that allow propeller blades to move from the flight low-pitch position to a position that is substantially less than that at the normal flight low-pitch stop position. The analysis may include or be supported by the analysis made to show compliance with the type certification of the propeller and associated installation components. Credit will be given for pertinent analysis and testing completed by the engine and propeller manufacturers.

40. *Turbopropeller drag-limiting systems.* Turbopropeller drag-limiting systems must be designed so that no single failure or malfunction of any of the systems during normal or emergency operation results in propeller drag in excess of that for which the airplane was designed. Failure of structural elements of the drag-limiting systems need not be considered if the probability of this kind of failure is extremely remote.

41. *Turbine engine powerplant operating characteristics.* For turbopropeller powered airplanes, the turbine engine powerplant operating characteristics must be investigated in flight to determine that no adverse characteristics (such as stall, surge, or flameout) are present to a hazardous degree, during normal and emergency operation within the range of operating limitations of the airplane and of the engine.

42. *Fuel flow.* (a) For turbopropeller powered airplanes—

(1) The fuel system must provide for continuous supply of fuel to the engines for normal operation without interruption due to depletion of fuel in any tank other than the main tank; and

(2) The fuel flow rate for turbopropeller engine fuel pump systems must not be less than 125 percent of the fuel flow required to develop the standard sea level atmospheric conditions takeoff power selected and included as an operating limitation in the Airplane Flight Manual.

(b) For reciprocating engine powered airplanes, it is acceptable for the fuel flow rate for each pump system (main and reserve supply) to be 125 percent of the takeoff fuel consumption of the engine.

FUEL SYSTEM COMPONENTS

43. *Fuel pumps.* For turbopropeller powered airplanes, a reliable and independent power source must be provided for each pump used with turbine engines which do not have provisions for mechanically driving the main pumps. It must be demonstrated that the pump installations provide a reliability and durability equivalent to that provided by FAR 23.991(a).

44. *Fuel strainer or filter.* For turbopropeller powered airplanes, the following apply:

(a) There must be a fuel strainer or filter between the tank outlet and the fuel metering device of the engine. In addition, the fuel strainer or filter must be—

(1) Between the tank outlet and the engine-driven positive displacement pump inlet, if there is an engine-driven positive displacement pump;

(2) Accessible for drainage and cleaning and, for the strainer screen, easily removable; and

(3) Mounted so that its weight is not supported by the connecting lines or by the inlet or outlet connections of the strainer or filter itself.

(b) Unless there are means in the fuel system to prevent the accumulation of ice on the filter, there must be means to automatically maintain the fuel flow if ice-clogging of the filter occurs; and

(c) The fuel strainer or filter must be of adequate capacity (with respect to operating limitations established to insure proper service) and of appropriate mesh to insure proper engine operation, with the fuel contaminated to a degree (with respect to particle size and density) that can be reasonably expected in service. The degree of fuel filtering may not be less than that established for the engine type certification.

45. *Lightning strike protection.* Protection must be provided against the ignition of flammable vapors in the fuel vent system due to lightning strikes.

COOLING

46. *Cooling test procedures for turbopropeller powered airplanes.* (a) Turbopropeller powered airplanes must be shown to comply with the requirements of FAR 23.1041 during takeoff, climb en route, and landing stages of flight that correspond to the applicable performance requirements. The cooling test must be conducted with the airplane in the configuration and operating under the conditions that are critical relative to cooling during each stage of flight. For the cooling tests a temperature is ''stabilized'' when its rate of change is less than 2° F. per minute.

(b) Temperatures must be stabilized under the conditions from which entry is made into each stage of flight being investigated unless the entry condition is not one during which component and engine fluid temperatures would stabilize, in which case, operation through the full entry condition must be conducted before entry into the stage of flight being investigated in order to allow temperatures to reach their natural levels at the time of entry. The takeoff cooling test must be preceded by a period during which the powerplant component and engine fluid temperatures are stabilized with the engines at ground idle.

(c) Cooling tests for each stage of flight must be continued until—

(1) The component and engine fluid temperatures stabilize;

(2) The stage of flight is completed; or

(3) An operating limitation is reached.

INDUCTION SYSTEM

47. *Air induction.* For turbopropeller powered airplanes—

(a) There must be means to prevent hazardous quantities of fuel leakage or overflow from drains, vents, or other components of flammable fluid systems from entering the engine intake system; and

(b) The air inlet ducts must be located or protected so as to minimize the ingestion of foreign matter during takeoff, landing, and taxiing.

48. *Induction system icing protection.* For turbopropeller powered airplanes, each turbine engine must be able to operate throughout its flight power range without adverse effect on engine operation or serious loss of power or thrust, under the icing conditions specified in appendix C of FAR 25. In addition, there must be means to indicate to appropriate flight crewmembers the functioning of the powerplant ice protection system.

49. *Turbine engine bleed air systems.* Turbine engine bleed air systems of turbopropeller powered airplanes must be investigated to determine—

(a) That no hazard to the airplane will result if a duct rupture occurs. This condition must consider that a failure of the duct can occur anywhere between the engine port and the airplane bleed service; and

(b) That if the bleed air system is used for direct cabin pressurization, it is not possible for hazardous contamination of the cabin air system to occur in event of lubrication system failure.

EXHAUST SYSTEM

50. *Exhaust system drains.* Turbopropeller engine exhaust systems having low spots or pockets must incorporate drains at such locations. These drains must discharge clear of the airplane in normal and ground attitudes to prevent the accumulation of fuel after the failure of an attempted engine start.

POWERPLANT CONTROLS AND ACCESSORIES

51. *Engine controls.* If throttles or power levers for turbopropeller powered airplanes are such that any position of these controls will reduce the fuel flow to the engine(s) below that necessary for satisfactory and safe idle operation of the engine while the airplane is in flight, a means must be provided to prevent inadvertent movement of the control into this position. The means provided must incorporate a positive lock or stop at this idle position and must require a separate and distinct operation by the crew to displace the control from the normal engine operating range.

52. *Reverse thrust controls.* For turbopropeller powered airplanes, the propeller reverse thrust controls must have a means to prevent their inadvertent operation. The means must have a positive lock or stop at the idle position and must require a separate and distinct operation by the crew to displace the control from the flight regime.

53. *Engine ignition systems.* Each turbopropeller airplane ignition system must be considered an essential electrical load.

54. *Powerplant accessories.* The powerplant accessories must meet the requirements of FAR 23.1163, and if the continued rotation of any accessory remotely driven by the engine is hazardous when malfunctioning occurs, there must be means to prevent rotation without interfering with the continued operation of the engine.

POWERPLANT FIRE PROTECTION

55. *Fire detector system.* For turbopropeller powered airplanes, the following apply:

(a) There must be a means that ensures prompt detection of fire in the engine compartment. An overtemperature switch in each engine cooling air exit is an acceptable method of meeting this requirement.

(b) Each fire detector must be constructed and installed to withstand the vibration, inertia, and other loads to which it may be subjected in operation.

(c) No fire detector may be affected by any oil, water, other fluids, or fumes that might be present.

(d) There must be means to allow the flight crew to check, in flight, the functioning of each fire detector electric circuit.

(e) Wiring and other components of each fire detector system in a fire zone must be at least fire resistant.

56. *Fire protection, cowling and nacelle skin.* For reciprocating engine powered airplanes, the engine cowling must be designed and constructed so that no fire originating in the engine compartment can enter, either through openings or by burn through, any other region where it would create additional hazards.

57. *Flammable fluid fire protection.* If flammable fluids or vapors might be liberated by the leakage of fluid systems in areas other than engine compartments, there must be means to—

(a) Prevent the ignition of those fluids or vapors by any other equipment; or

(b) Control any fire resulting from that ignition.

EQUIPMENT

58. *Powerplant instruments.* (a) The following are required for turbopropeller airplanes:

(1) The instruments required by FAR 23.1305 (a)(1) through (4), (b)(2) and (4).

(2) A gas temperature indicator for each engine.

(3) Free air temperature indicator.

(4) A fuel flowmeter indicator for each engine.

(5) Oil pressure warning means for each engine.

(6) A torque indicator or adequate means for indicating power output for each engine.

(7) Fire warning indicator for each engine.

(8) A means to indicate when the propeller blade angle is below the low-pitch position corresponding to idle operation in flight.

(9) A means to indicate the functioning of the ice protection system for each engine.

(b) For turbopropeller powered airplanes, the turbopropeller blade position indicator must begin indicating when the blade has moved below the flight low-pitch position.

(c) The following instruments are required for reciprocating-engine powered airplanes:

(1) The instruments required by FAR 23.1305.

(2) A cylinder head temperature indicator for each engine.

(3) A manifold pressure indicator for each engine.

SYSTEMS AND EQUIPMENTS

GENERAL

59. *Function and installation.* The systems and equipment of the airplane must meet the requirements of FAR 23.1301, and the following:

(a) Each item of additional installed equipment must—

(1) Be of a kind and design appropriate to its intended function;

(2) Be labeled as to its identification, function, or operating limitations, or any applicable combination of these factors, unless misuse or inadvertent actuation cannot create a hazard;

(3) Be installed according to limitations specified for that equipment; and

(4) Function properly when installed.

(b) Systems and installations must be designed to safeguard against hazards to the aircraft in the event of their malfunction or failure.

(c) Where an installation, the functioning of which is necessary in showing compliance with the applicable requirements, requires a power supply, such installation must be considered an essential load on the power supply, and the power sources and the distribution system must be capable of supplying the following power loads in probable operation combinations and for probable durations:

(1) All essential loads after failure of any prime mover, power converter, or energy storage device.

(2) All essential loads after failure of any one engine on two-engine airplanes.

(3) In determining the probable operating combinations and durations of essential loads for the power failure conditions described in subparagraphs (1) and (2) of this paragraph, it is permissible to assume that the power loads are reduced in accordance with a monitoring procedure which is consistent with safety in the types of operations authorized.

60. *Ventilation.* The ventilation system of the airplane must meet the requirements of FAR 23.831, and in addition, for pressurized aircraft the ventilating air in flight crew and passenger compartments must be free of harmful or hazardous concentrations of gases and vapors in normal operation and in the event of reasonably probable failures or malfunctioning of the ventilating, heating, pressurization, or other systems, and equipment. If accumulation of hazardous quantities of smoke in the cockpit area is reasonably probable, smoke evacuation must be readily accomplished.

ELECTRICAL SYSTEMS AND EQUIPMENT

61. *General.* The electrical systems and equipment of the airplane must meet the requirements of FAR 23.1351, and the following:

(a) *Electrical system capacity.* The required generating capacity, and number and kinds of power sources must—

(1) Be determined by an electrical load analysis, and

(2) Meet the requirements of FAR 23.1301.

(b) *Generating system.* The generating system includes electrical power sources, main power busses, transmission cables, and associated control, regulation, and protective devices. It must be designed so that—

(1) The system voltage and frequency (as applicable) at the terminals of all essential load equipment can be maintained within the limits for which the equipment is designed, during any probable operating conditions;

(2) System transients due to switching, fault clearing, or other causes do not make essential loads inoperative, and do not cause a smoke or fire hazard;

(3) There are means, accessible in flight to appropriate crewmembers, for the individual and collective disconnection of the electrical power sources from the system; and

(4) There are means to indicate to appropriate crewmembers the generating system quantities essential for the safe operation of the system, including the voltage and current supplied by each generator.

62. *Electrical equipment and installation.* Electrical equipment controls, and wiring must be installed so that operation of any one unit or system of units will not adversely affect the simultaneous operation of to the safe operation.

63. *Distribution system.* (a) For the purpose of complying with this section, the distribution system includes the distribution busses, their associated feeders and each control and protective device.

(b) Each system must be designed so that essential load circuits can be supplied in the event of reasonably probable faults or open circuits, including faults in heavy current carrying cables.

(c) If two independent sources of electrical power for particular equipment or systems are required by this regulation, their electrical energy supply must be insured by means such as duplicate electrical equipment, throwover switching, or multichannel or loop circuits separately routed.

64. *Circuit protective devices.* The circuit protective devices for the electrical circuits of the airplane must meet the requirements of FAR 23.1357, and in addition circuits for loads which are essential to safe operation must have individual and exclusive circuit protection.

[Doc. No. 8070, 34 FR 189, Jan. 7, 1969, as amended by SFAR 23–1, 34 FR 20176, Dec. 24, 1969; 35 FR 1102, Jan. 28, 1970]

SFAR NO. 41

EDITORIAL NOTE: For the text of SFAR No. 41, see part 21 of this chapter.

## Subpart A—General

### § 23.1 Applicability.

(a) This part prescribes airworthiness standards for the issue of type certificates, and changes to those certificates, for airplanes in the normal, utility, acrobatic, and commuter categories.

(b) Each person who applies under Part 21 for such a certificate or change must show compliance with the applicable requirements of this part.

[Doc. No. 4080, 29 FR 17955, Dec. 18, 1964, as amended by Amdt. 23–34, 52 FR 1825, Jan. 15, 1987]

### § 23.2 Special retroactive requirements.

(a) Notwithstanding §§ 21.17 and 21.101 of this chapter and irrespective of the type certification basis, each normal, utility, and acrobatic category airplane having a passenger seating configuration, excluding pilot seats, of nine or less, manufactured after December 12, 1986, or any such foreign airplane for entry into the United States must provide a safety belt and shoulder harness for each forward- or aft-facing seat which will protect the occupant from serious head injury when subjected to the inertia loads resulting from the ultimate static load factors prescribed in § 23.561(b)(2) of this part, or which will provide the occupant protection specified in § 23.562 of this part when that section is applicable to the airplane. For other seat orientations, the seat/restraint system must be designed to provide a level of occupant protection equivalent to that provided for forward- or aft-facing seats with a safety belt and shoulder harness installed.

(b) Each shoulder harness installed at a flight crewmember station, as required by this section, must allow the crewmember, when seated with the safety belt and shoulder harness fastened, to perform all functions necessary for flight operations.

(c) For the purpose of this section, the date of manufacture is:

(1) The date the inspection acceptance records, or equivalent, reflect that the airplane is complete and meets the FAA approved type design data; or

(2) In the case of a foreign manufactured airplane, the date the foreign civil airworthiness authority certifies the airplane is complete and issues an original standard airworthiness certificate, or the equivalent in that country.

[Amdt. 23–36, 53 FR 30812, Aug. 15, 1988]

### § 23.3 Airplane categories.

(a) The normal category is limited to airplanes that have a seating configuration, excluding pilot seats, of nine or less, a maximum certificated takeoff weight of 12,500 pounds or less, and intended for nonacrobatic operation. Nonacrobatic operation includes:

(1) Any maneuver incident to normal flying;

(2) Stalls (except whip stalls); and

(3) Lazy eights, chandelles, and steep turns, in which the angle of bank is not more than 60 degrees.

(b) The utility category is limited to airplanes that have a seating configuration, excluding pilot seats, of nine or less, a maximum certificated takeoff weight of 12,500 pounds or less, and intended for limited acrobatic operation. Airplanes certificated in the utility category may be used in any of the operations covered under paragraph (a) of this section and in limited acrobatic operations. Limited acrobatic operation includes:

(1) Spins (if approved for the particular type of airplane); and

(2) Lazy eights, chandelles, and steep turns, or similar maneuvers, in which the angle of bank is more than 60 degrees but not more than 90 degrees.

(c) The acrobatic category is limited to airplanes that have a seating configuration, excluding pilot seats, of nine or less, a maximum certificated takeoff weight of 12,500 pounds or less, and intended for use without restrictions, other than those shown to be necessary as a result of required flight tests.

(d) The commuter category is limited to propeller-driven, multiengine airplanes that have a seating configuration, excluding pilot seats, of 19 or less, and a maximum certificated takeoff weight of 19,000 pounds or less. The commuter category operation is limited to any maneuver incident to normal flying, stalls (except whip stalls), and steep turns, in which the angle of bank is not more than 60 degrees.

(e) Except for commuter category, airplanes may be type certificated in more than one category if the requirements of each requested category are met.

[Doc. No. 4080, 29 FR 17955, Dec. 18, 1964, as amended by Amdt. 23–4, 32 FR 5934, Apr. 14, 1967; Amdt. 23–34, 52 FR 1825, Jan. 15, 1987; 52 FR 34745, Sept. 14, 1987; Amdt. 23–50, 61 FR 5183, Feb. 9, 1996]

## Subpart B—Flight

GENERAL

### §23.21 Proof of compliance.

(a) Each requirement of this subpart must be met at each appropriate combination of weight and center of gravity within the range of loading conditions for which certification is requested. This must be shown—

(1) By tests upon an airplane of the type for which certification is requested, or by calculations based on, and equal in accuracy to, the results of testing; and

(2) By systematic investigation of each probable combination of weight and center of gravity, if compliance cannot be reasonably inferred from combinations investigated.

(b) The following general tolerances are allowed during flight testing. However, greater tolerances may be allowed in particular tests:

| Item | Tolerance |
|---|---|
| Weight | +5%, –10%. |
| Critical items affected by weight | +5%, –1%. |
| C.G | ±7% total travel. |

### §23.23 Load distribution limits.

(a) Ranges of weights and centers of gravity within which the airplane may be safely operated must be established. If a weight and center of gravity combination is allowable only within certain lateral load distribution limits that could be inadvertently exceeded, these limits must be established for the corresponding weight and center of gravity combinations.

(b) The load distribution limits may not exceed any of the following:

(1) The selected limits;

(2) The limits at which the structure is proven; or

(3) The limits at which compliance with each applicable flight requirement of this subpart is shown.

[Doc. No. 26269, 58 FR 42156, Aug. 6, 1993]

### §23.25 Weight limits.

(a) *Maximum weight*. The maximum weight is the highest weight at which compliance with each applicable requirement of this part (other than those complied with at the design landing weight) is shown. The maximum weight must be established so that it is—

(1) Not more than the least of—

(i) The highest weight selected by the applicant; or

(ii) The design maximum weight, which is the highest weight at which compliance with each applicable structural loading condition of this part (other than those complied with at the design landing weight) is shown; or

(iii) The highest weight at which compliance with each applicable flight requirement is shown, and

(2) Not less than the weight with—

(i) Each seat occupied, assuming a weight of 170 pounds for each occupant for normal and commuter category airplanes, and 190 pounds for utility and acrobatic category airplanes, except that seats other than pilot seats may be placarded for a lesser weight; and

(A) Oil at full capacity, and

(B) At least enough fuel for maximum continuous power operation of at least 30 minutes for day-VFR approved airplanes and at least 45 minutes for night-VFR and IFR approved airplanes; or

(ii) The required minimum crew, and fuel and oil to full tank capacity.

(b) *Minimum weight.* The minimum weight (the lowest weight at which compliance with each applicable requirement of this part is shown) must be established so that it is not more than the sum of—

(1) The empty weight determined under § 23.29;

(2) The weight of the required minimum crew (assuming a weight of 170 pounds for each crewmember); and

(3) The weight of—

(i) For turbojet powered airplanes, 5 percent of the total fuel capacity of that particular fuel tank arrangement under investigation, and

(ii) For other airplanes, the fuel necessary for one-half hour of operation at maximum continuous power.

[Doc. No. 4080, 29 FR 17955, Dec. 18, 1964, as amended by Amdt. 23–7, 34 FR 13086, Aug. 13, 1969; Amdt. 23–21, 43 FR 2317, Jan. 16, 1978; Amdt. 23–34, 52 FR 1825, Jan. 15, 1987; Amdt. 23–45, 58 FR 42156, Aug. 6, 1993; Amdt. 23–50, 61 FR 5183, Feb. 9, 1996]

### § 23.29 Empty weight and corresponding center of gravity.

(a) The empty weight and corresponding center of gravity must be determined by weighing the airplane with—

(1) Fixed ballast;

(2) Unusable fuel determined under § 23.959; and

(3) Full operating fluids, including—

(i) Oil;

(ii) Hydraulic fluid; and

(iii) Other fluids required for normal operation of airplane systems, except potable water, lavatory precharge water, and water intended for injection in the engines.

(b) The condition of the airplane at the time of determining empty weight must be one that is well defined and can be easily repeated.

[Doc. No. 4080, 29 FR 17955, Dec. 18, 1964; 30 FR 258, Jan. 9, 1965, as amended by Amdt. 23–21, 43 FR 2317, Jan. 16, 1978]

### § 23.31 Removable ballast.

Removable ballast may be used in showing compliance with the flight requirements of this subpart, if—

(a) The place for carrying ballast is properly designed and installed, and is marked under § 23.1557; and

(b) Instructions are included in the airplane flight manual, approved manual material, or markings and placards, for the proper placement of the removable ballast under each loading condition for which removable ballast is necessary.

[Doc. No. 4080, 29 FR 17955, Dec. 18, 1964; 30 FR 258, Jan. 9, 1965, as amended by Amdt. 23–13, 37 FR 20023, Sept. 23, 1972]

### § 23.33 Propeller speed and pitch limits.

(a) *General.* The propeller speed and pitch must be limited to values that will assure safe operation under normal operating conditions.

(b) *Propellers not controllable in flight.* For each propeller whose pitch cannot be controlled in flight—

(1) During takeoff and initial climb at the all engine(s) operating climb speed specified in § 23.65, the propeller must limit the engine r.p.m., at full throttle or at maximum allowable takeoff manifold pressure, to a speed not greater than the maximum allowable takeoff r.p.m.; and

(2) During a closed throttle glide, at $V_{NE}$, the propeller may not cause an engine speed above 110 percent of maximum continuous speed.

(c) *Controllable pitch propellers without constant speed controls.* Each propeller that can be controlled in flight, but that does not have constant speed controls, must have a means to limit the pitch range so that—

(1) The lowest possible pitch allows compliance with paragraph (b)(1) of this section; and

(2) The highest possible pitch allows compliance with paragraph (b)(2) of this section.

(d) *Controllable pitch propellers with constant speed controls.* Each controllable pitch propeller with constant speed controls must have—

(1) With the governor in operation, a means at the governor to limit the maximum engine speed to the maximum allowable takeoff r.p.m.; and

(2) With the governor inoperative, the propeller blades at the lowest possible pitch, with takeoff power, the airplane stationary, and no wind, either—

(i) A means to limit the maximum engine speed to 103 percent of the maximum allowable takeoff r.p.m., or

(ii) For an engine with an approved overspeed, a means to limit the maximum engine and propeller speed to not more than the maximum approved overspeed.

[Doc. No. 4080, 29 FR 17955, Dec. 18, 1964, as amended by Amdt. 23–45, 58 FR 42156, Aug. 6, 1993; Amdt. 23–50, 61 FR 5183, Feb. 9, 1996]

PERFORMANCE

**§23.45 General.**

(a) Unless otherwise prescribed, the performance requirements of this part must be met for—

(1) Still air and standard atmosphere; and

(2) Ambient atmospheric conditions, for commuter category airplanes, for reciprocating engine-powered airplanes of more than 6,000 pounds maximum weight, and for turbine engine-powered airplanes.

(b) Performance data must be determined over not less than the following ranges of conditions—

(1) Airport altitudes from sea level to 10,000 feet; and

(2) For reciprocating engine-powered airplanes of 6,000 pounds, or less, maximum weight, temperature from standard to 30 °C above standard; or

(3) For reciprocating engine-powered airplanes of more than 6,000 pounds maximum weight and turbine engine-powered airplanes, temperature from standard to 30 °C above standard, or the maximum ambient atmospheric temperature at which compliance with the cooling provisions of §23.1041 to §23.1047 is shown, if lower.

(c) Performance data must be determined with the cowl flaps or other means for controlling the engine cooling air supply in the position used in the cooling tests required by §23.1041 to §23.1047.

(d) The available propulsive thrust must correspond to engine power, not exceeding the approved power, less—

(1) Installation losses; and

(2) The power absorbed by the accessories and services appropriate to the particular ambient atmospheric conditions and the particular flight condition.

(e) The performance, as affected by engine power or thrust, must be based on a relative humidity:

(1) Of 80 percent at and below standard temperature; and

(2) From 80 percent, at the standard temperature, varying linearly down to 34 percent at the standard temperature plus 50 °F.

(f) Unless otherwise prescribed, in determining the takeoff and landing distances, changes in the airplane's configuration, speed, and power must be made in accordance with procedures established by the applicant for operation in service. These procedures must be able to be executed consistently by pilots of average skill in atmospheric conditions reasonably expected to be encountered in service.

(g) The following, as applicable, must be determined on a smooth, dry, hard-surfaced runway—

(1) Takeoff distance of §23.53(b);

(2) Accelerate-stop distance of §23.55;

(3) Takeoff distance and takeoff run of §23.59; and

(4) Landing distance of §23.75.

NOTE: The effect on these distances of operation on other types of surfaces (for example, grass, gravel) when dry, may be determined or derived and these surfaces listed in the Airplane Flight Manual in accordance with §23.1583(p).

(h) For commuter category airplanes, the following also apply:

(1) Unless otherwise prescribed, the applicant must select the takeoff, enroute, approach, and landing configurations for the airplane.

(2) The airplane configuration may vary with weight, altitude, and temperature, to the extent that they are compatible with the operating procedures required by paragraph (h)(3) of this section.

(3) Unless otherwise prescribed, in determining the critical-engine-inoperative takeoff performance, takeoff flight path, and accelerate-stop distance, changes in the airplane's configuration, speed, and power must be

made in accordance with procedures established by the applicant for operation in service.

(4) Procedures for the execution of discontinued approaches and balked landings associated with the conditions prescribed in § 23.67(c)(4) and § 23.77(c) must be established.

(5) The procedures established under paragraphs (h)(3) and (h)(4) of this section must—

(i) Be able to be consistently executed by a crew of average skill in atmospheric conditions reasonably expected to be encountered in service;

(ii) Use methods or devices that are safe and reliable; and

(iii) Include allowance for any reasonably expected time delays in the execution of the procedures.

[Doc. No. 27807, 61 FR 5184, Feb. 9, 1996]

### § 23.49 Stalling period.

(a) $V_{SO}$ and $V_{S1}$ are the stalling speeds or the minimum steady flight speeds, in knots (CAS), at which the airplane is controllable with—

(1) For reciprocating engine-powered airplanes, the engine(s) idling, the throttle(s) closed or at not more than the power necessary for zero thrust at a speed not more than 110 percent of the stalling speed;

(2) For turbine engine-powered airplanes, the propulsive thrust not greater than zero at the stalling speed, or, if the resultant thrust has no appreciable effect on the stalling speed, with engine(s) idling and throttle(s) closed;

(3) The propeller(s) in the takeoff position;

(4) The airplane in the condition existing in the test, in which $V_{SO}$ and $V_{S1}$ are being used;

(5) The center of gravity in the position that results in the highest value of $V_{SO}$ and $V_{S1}$; and

(6) The weight used when $V_{SO}$ and $V_{S1}$ are being used as a factor to determine compliance with a required performance standard.

(b) $V_{SO}$ and $V_{S1}$ must be determined by flight tests, using the procedure and meeting the flight characteristics specified in § 23.201.

(c) Except as provided in paragraph (d) of this section, $V_{SO}$ and $V_{S1}$ at maximum weight must not exceed 61 knots for—

(1) Single-engine airplanes; and

(2) Multiengine airplanes of 6,000 pounds or less maximum weight that cannot meet the minimum rate of climb specified in § 23.67(a) (1) with the critical engine inoperative.

(d) All single-engine airplanes, and those multiengine airplanes of 6,000 pounds or less maximum weight with a $V_{SO}$ of more than 61 knots that do not meet the requirements of § 23.67(a)(1), must comply with § 23.562(d).

[Doc. No. 27807, 61 FR 5184, Feb. 9, 1996]

### § 23.51 Takeoff speeds.

(a) For normal, utility, and acrobatic category airplanes, rotation speed, $V_R$, is the speed at which the pilot makes a control input, with the intention of lifting the airplane out of contact with the runway or water surface.

(1) For multiengine landplanes, $V_R$, must not be less than the greater of 1.05 $V_{MC}$; or 1.10 $V_{S1}$;

(2) For single-engine landplanes, $V_R$, must not be less than $V_{S1}$; and

(3) For seaplanes and amphibians taking off from water, $V_R$, may be any speed that is shown to be safe under all reasonably expected conditions, including turbulence and complete failure of the critical engine.

(b) For normal, utility, and acrobatic category airplanes, the speed at 50 feet above the takeoff surface level must not be less than:

(1) or multiengine airplanes, the highest of—

(i) A speed that is shown to be safe for continued flight (or emergency landing, if applicable) under all reasonably expected conditions, including turbulence and complete failure of the critical engine;

(ii) 1.10 $V_{MC}$; or

(iii) 1.20 $V_{S1}$.

(2) For single-engine airplanes, the higher of—

(i) A speed that is shown to be safe under all reasonably expected conditions, including turbulence and complete engine failure; or

(ii) 1.20 $V_{S1}$.

(c) For commuter category airplanes, the following apply:

(l) $V_1$ must be established in relation to $V_{EF}$ as follows:

(i) $V_{EF}$ is the calibrated airspeed at which the critical engine is assumed to

fail. $V_{EF}$ must be selected by the applicant but must not be less than 1.05 $V_{MC}$ determined under §23.149(b) or, at the option of the applicant, not less than $V_{MCG}$ determined under §23.149(f).

(ii) The takeoff decision speed, $V_1$, is the calibrated airspeed on the ground at which, as a result of engine failure or other reasons, the pilot is assumed to have made a decision to continue or discontinue the takeoff. The takeoff decision speed, $V_1$, must be selected by the applicant but must not be less than $V_{EF}$ plus the speed gained with the critical engine inoperative during the time interval between the instant at which the critical engine is failed and the instant at which the pilot recognizes and reacts to the engine failure, as indicated by the pilot's application of the first retarding means during the accelerate-stop determination of §23.55.

(2) The rotation speed, $V_R$, in terms of calibrated airspeed, must be selected by the applicant and must not be less than the greatest of the following:

(i) $V_1$;

(ii) 1.05 $V_{MC}$ determined under §23.149(b);

(iii) 1.10 $V_{S1}$; or

(iv) The speed that allows attaining the initial climb-out speed, $V_2$, before reaching a height of 35 feet above the takeoff surface in accordance with §23.57(c)(2).

(3) For any given set of conditions, such as weight, altitude, temperature, and configuration, a single value of $V_R$ must be used to show compliance with both the one-engine-inoperative takeoff and all-engines-operating takeoff requirements.

(4) The takeoff safety speed, $V_2$, in terms of calibrated airspeed, must be selected by the applicant so as to allow the gradient of climb required in §23.67 (c)(1) and (c)(2) but mut not be less than 1.10 $V_{MC}$ or less than 1.20 $V_{S1}$.

(5) The one-engine-inoperative takeoff distance, using a normal rotation rate at a speed 5 knots less than $V_R$, established in accordance with paragraph (c)(2) of this section, must be shown not to exceed the corresponding one-engine-inoperative takeoff distance, determined in accordance with §23.57 and §23.59(a)(1), using the established $V_R$. The takeoff, otherwise performed in accordance with §23.57, must be continued safely from the point at which the airplane is 35 feet above the takeoff surface and at a speed not less than the established $V_2$ minus 5 knots.

(6) The applicant must show, with all engines operating, that marked increases in the scheduled takeoff distances, determined in accordance with §23.59(a)(2), do not result from over-rotation of the airplane or out-of-trim conditions.

[Doc. No. 27807, 61 FR 5184, Feb. 9, 1996]

### §23.53 Takeoff performance.

(a) For normal, utility, and acrobatic category airplanes, the takeoff distance must be determined in accordance with paragraph (b) of this section, using speeds determined in accordance with §23.51 (a) and (b).

(b) For normal, utility, and acrobatic category airplanes, the distance required to takeoff and climb to a height of 50 feet above the takeoff surface must be determined for each weight, altitude, and temperature within the operational limits established for takeoff with—

(1) Takeoff power on each engine;

(2) Wing flaps in the takeoff position(s); and

(3) Landing gear extended.

(c) For commuter category airplanes, takeoff performance, as required by §§23.55 through 23.59, must be determined with the operating engine(s) within approved operating limitations.

[Doc. No. 27807, 61 FR 5185, Feb. 9, 1996]

### §23.55 Accelerate-stop distance.

For each commuter category airplane, the accelerate-stop distance must be determined as follows:

(a) The accelerate-stop distance is the sum of the distances necessary to—

(1) Accelerate the airplane from a standing start to $V_{EF}$ with all engines operating;

(2) Accelerate the airplane from $V_{EF}$ to $V_1$, assuming the critical engine fails at $V_{EF}$; and

(3) Come to a full stop from the point at which $V_1$ is reached.

(b) Means other than wheel brakes may be used to determine the accelerate-stop distances if that means—

(1) Is safe and reliable;

(2) Is used so that consistent results can be expected under normal operating conditions; and

(3) Is such that exceptional skill is not required to control the airplane.

[Amdt. 23–34, 52 FR 1826, Jan. 15, 1987, as amended by Amdt. 23–50, 61 FR 5185, Feb. 9, 1996]

### § 23.57 Takeoff path.

For each commuter category airplane, the takeoff path is as follows:

(a) The takeoff path extends from a standing start to a point in the takeoff at which the airplane is 1500 feet above the takeoff surface at or below which height the transition from the takeoff to the enroute configuration must be completed; and

(1) The takeoff path must be based on the procedures prescribed in § 23.45;

(2) The airplane must be accelerated on the ground to $V_{EF}$ at which point the critical engine must be made inoperative and remain inoperative for the rest of the takeoff; and

(3) After reaching $V_{EF}$, the airplane must be accelerated to $V_2$.

(b) During the acceleration to speed $V_2$, the nose gear may be raised off the ground at a speed not less than $V_R$. However, landing gear retraction must not be initiated until the airplane is airborne.

(c) During the takeoff path determination, in accordance with paragraphs (a) and (b) of this section—

(1) The slope of the airborne part of the takeoff path must not be negative at any point;

(2) The airplane must reach $V_2$ before it is 35 feet above the takeoff surface, and must continue at a speed as close as practical to, but not less than $V_2$, until it is 400 feet above the takeoff surface;

(3) At each point along the takeoff path, starting at the point at which the airplane reaches 400 feet above the takeoff surface, the available gradient of climb must not be less than—

(i) 1.2 percent for two-engine airplanes;

(ii) 1.5 percent for three-engine airplanes;

(iii) 1.7 percent for four-engine airplanes; and

(4) Except for gear retraction and automatic propeller feathering, the airplane configuration must not be changed, and no change in power that requires action by the pilot may be made, until the airplane is 400 feet above the takeoff surface.

(d) The takeoff path to 35 feet above the takeoff surface must be determined by a continuous demonstrated takeoff.

(e) The takeoff path to 35 feet above the takeoff surface must be determined by synthesis from segments; and

(1) The segments must be clearly defined and must be related to distinct changes in configuration, power, and speed;

(2) The weight of the airplane, the configuration, and the power must be assumed constant throughout each segment and must correspond to the most critical condition prevailing in the segment; and

(3) The takeoff flight path must be based on the airplane's performance without utilizing ground effect.

[Amdt. 23–34, 52 FR 1827, Jan. 15, 1987, as amended by Amdt. 23–50, 61 FR 5185, Feb. 9, 1996]

### § 23.59 Takeoff distance and takeoff run.

For each commuter category airplane, the takeoff distance and, at the option of the applicant, the takeoff run, must be determined.

(a) Takeoff distance is the greater of—

(1) The horizontal distance along the takeoff path from the start of the takeoff to the point at which the airplane is 35 feet above the takeoff surface as determined under § 23.57; or

(2) With all engines operating, 115 percent of the horizontal distance from the start of the takeoff to the point at which the airplane is 35 feet above the takeoff surface, determined by a procedure consistent with § 23.57.

(b) If the takeoff distance includes a clearway, the takeoff run is the greater of—

(1) The horizontal distance along the takeoff path from the start of the takeoff to a point equidistant between the liftoff point and the point at which the airplane is 35 feet above the takeoff surface as determined under § 23.57; or

(2) With all engines operating, 115 percent of the horizontal distance from

the start of the takeoff to a point equidistant between the liftoff point and the point at which the airplane is 35 feet above the takeoff surface, determined by a procedure consistent with §23.57.

[Amdt. 23–34, 52 FR 1827, Jan. 15, 1987, as amended by Amdt. 23–50, 61 FR 5185, Feb. 9, 1996]

### §23.61 Takeoff flight path.

For each commuter category airplane, the takeoff flight path must be determined as follows:

(a) The takeoff flight path begins 35 feet above the takeoff surface at the end of the takeoff distance determined in accordance with §23.59.

(b) The net takeoff flight path data must be determined so that they represent the actual takeoff flight paths, as determined in accordance with §23.57 and with paragraph (a) of this section, reduced at each point by a gradient of climb equal to—

(1) 0.8 percent for two-engine airplanes;

(2) 0.9 percent for three-engine airplanes; and

(3) 1.0 percent for four-engine airplanes.

(c) The prescribed reduction in climb gradient may be applied as an equivalent reduction in acceleration along that part of the takeoff flight path at which the airplane is accelerated in level flight.

[Amdt. 23–34, 52 FR 1827, Jan. 15, 1987]

### §23.63 Climb: general.

(a) Compliance with the requirements of §§23.65, 23.66, 23.67, 23.69, and 23.77 must be shown—

(1) Out of ground effect; and

(2) At speeds that are not less than those at which compliance with the powerplant cooling requirements of §§23.1041 to 23.1047 has been demonstrated; and

(3) Unless otherwise specified, with one engine inoperative, at a bank angle not exceeding 5 degrees.

(b) For normal, utility, and acrobatic category reciprocating engine-powered airplanes of 6,000 pounds or less maximum weight, compliance must be shown with §23.65(a), §23.67(a), where appropriate, and §23.77(a) at maximum takeoff or landing weight, as appropriate, in a standard atmosphere.

(c) For normal, utility, and acrobatic category reciprocating engine-powered airplanes of more than 6,000 pounds maximum weight, and turbine engine-powered airplanes in the normal, utility, and acrobatic category, compliance must be shown at weights as a function of airport altitude and ambient temperature, within the operational limits established for takeoff and landing, respectively, with—

(1) Sections 23.65(b) and 23.67(b) (1) and (2), where appropriate, for takeoff, and

(2) Section 23.67(b)(2), where appropriate, and §23.77(b), for landing.

(d) For commuter category airplanes, compliance must be shown at weights as a function of airport altitude and ambient temperature within the operational limits established for takeoff and landing, respectively, with—

(1) Sections 23.67(c)(1), 23.67(c)(2), and 23.67(c)(3) for takeoff; and

(2) Sections 23.67(c)(3), 23.67(c)(4), and 23.77(c) for landing.

[Doc. No. 27807, 61 FR 5186, Feb. 9, 1996]

### §23.65 Climb: all engines operating.

(a) Each normal, utility, and acrobatic category reciprocating engine-powered airplane of 6,000 pounds or less maximum weight must have a steady climb gradient at sea level of at least 8.3 percent for landplanes or 6.7 percet for seaplanes and amphibians with—

(1) Not more than maximum continuous power on each engine;

(2) The landing gear retracted;

(3) The wing flaps in the takeoff position(s); and

(4) A climb speed not less than the greater of 1.1 $V_{MC}$ and 1.2 $V_{S1}$ for multi-engine airplanes and not less than 1.2 $V_{S1}$ for single—engine airplanes.

(b) Each normal, utility, and acrobatic category reciprocating engine-powered airplane of more than 6,000 pounds maximum weight and turbine engine-powered airplanes in the normal, utility, and acrobatic category must have a steady gradient of climb after takeoff of at least 4 percent with

(1) Take off power on each engine;

(2) The landing gear extended, except that if the landing gear can be retracted in not more than sven seconds,

the test may be conducted with the gear retracted;

(3) The wing flaps in the takeoff position(s); and

(4) A climb speed as specified in § 23.65(a)(4).

[Doc. No. 27807, 61 FR 5186, Feb. 9, 1996]

### § 23.66 Takeoff climb: One-engine inoperative.

For normal, utility, and acrobatic category reciprocating engine-powered airplanes of more than 6,000 pounds maximum weight, and turbine engine-powered airplanes in the normal, utility, and acrobatic category, the steady gradient of climb or descent must be determined at each weight, altitude, and ambient temperature within the operational limits established by the applicant with—

(a) The critical engine inoperative and its propeller in the position it rapidly and automatically assumes;

(b) The remaining engine(s) at takeoff power;

(c) The landing gear extended, except that if the landing gear can be retracted in not more than seven seconds, the test may be conducted with the gear retracted;

(d) The wing flaps in the takeoff position(s):

(e) The wings level; and

(f) A climb speed equal to that achieved at 50 feet in the demonstration of § 23.53.

[Doc. No. 27807, 61 FR 5186, Feb. 9, 1996]

### § 23.67 Climb: One engine inoperative.

(a) For normal, utility, and acrobatic category reciprocating engine-powered airplanes of 6,000 pounds or less maximum weight, the following apply:

(1) Except for those airplanes that meet the requirements prescribed in § 23.562(d), each airplane with a $V_{SO}$ of more than 61 knots must be able to maintain a steady climb gradient of at least 1.5 percent at a pressure altitude of 5,000 feet with the—

(i) Critical engine inoperative and its propeller in the minimum drag position;

(ii) Remaining engine(s) at not more than maximum continuous power;

(iii) Landing gear retracted;

(iv) Wing flaps retracted; and

(v) Climb speed not less than 1.2 $V_{S1}$.

(2) For each airplane that meets the requirements prescribed in § 23.562(d), or that has a $V_{SO}$ of 61 knots or less, the steady gradient of climb or descent at a pressure altitude of 5,000 feet must be determined with the—

(i) Critical engine inoperative and its propeller in the minimum drag position;

(ii) Remaining engine(s) at not more than maximum continuous power;

(iii) Landing gear retracted;

(iv) Wing flaps retracted; and

(v) Climb speed not less than $1.2V_{S1}$.

(b) For normal, utility, and acrobatic category reciprocating engine-powered airplanes of more than 6,000 pounds maximum weight, and turbine engine-powered airplanes in the normal, utility, and acrobatic category—

(1) The steady gradient of climb at an altitude of 400 feet above the takeoff must be measurably positive with the—

(i) Critical engine inoperative and its propeller in the minimum drag position;

(ii) Remaining engine(s) at takeoff power;

(iii) Landing gear retracted;

(iv) Wing flaps in the takeoff position(s); and

(v) Climb speed equal to that achieved at 50 feet in the demonstration of § 23.53.

(2) The steady gradient of climb must not be less than 0.75 percent at an altitude of 1,500 feet above the takeoff surface, or landing surface, as appropriate, with the—

(i) Critical engine inoperative and its propeller in the minimum drag position;

(ii) Remaining engine(s) at not more than maximum continuous power;

(iii) Landing gear retracted;

(iv) Wing flaps retracted; and

(v) Climb speed not less than 1.2 $V_{S1}$.

(c) For commuter category airplanes, the following apply:

(1) *Takeoff; landing gear extended.* The steady gradient of climb at the altitude of the takeoff surface must be measurably positive for two-engine airplanes, not less than 0.3 percent for three-engine airplanes, or 0.5 percent for four-engine airplanes with—

(i) The critical engine inoperative and its propeller in the position it rapidly and automatically assumes;

(ii) The remaining engine(s) at takeoff power;

(iii) The landing gear extended, and all landing gear doors open;

(iv) The wing flaps in the takeoff position(s);

(v) The wings level; and

(vi) A climb speed equal to $V_2$.

(2) *Takeoff; landing gear retracted.* The steady gradient of climb at an altitude of 400 feet above the takeoff surface must be not less than 2.0 percent of two-engine airplanes, 2.3 percent for three-engine airplanes, and 2.6 percent for four-engine airplanes with—

(i) The critical engine inoperative and its propeller in the position it rapidly and automatically assumes;

(ii) The remaining engine(s) at takeoff power;

(iii) The landing gear retracted;

(iv) The wing flaps in the takeoff position(s);

(v) A climb speed equal to $V_2$.

(3) *Enroute.* The steady gradient of climb at an altitude of 1,500 feet above the takeoff or landing surface, as appropriate, must be not less than 1.2 percent for two-engine airplanes, 1.5 percent for three-engine airplanes, and 1.7 percent for four-engine airplanes with—

(i) The critical engine inoperative and its propeller in the minimum drag position;

(ii) The remaining engine(s) at not more than maximum continuous power;

(iii) The landing gear retracted;

(iv) The wing flaps retracted; and

(v) A climb speed not less than 1.2 $V_{S1}$.

(4) *Discontinued approach.* The steady gradient of climb at an altitude of 400 feet above the landing surface must be not less than 2.1 percent for two-engine airplanes, 2.4 percent for three-engine airplanes, and 2.7 percent for four-engine airplanes, with—

(i) The critical engine inoperative and its propeller in the minimum drag position;

(ii) The remaining engine(s) at takeoff power;

(iii) Landing gear retracted;

(iv) Wing flaps in the approach position(s) in which $V_{S1}$ for these position(s) does not exceed 110 percent of the $V_{S1}$ for the related all-engines-operated landing position(s); and

(v) A climb speed established in connection with normal landing procedures but not exceeding 1.5 $V_{S1}$.

[Doc. No. 27807, 61 FR 5186, Feb. 9, 1996]

### §23.69 Enroute climb/descent.

(a) *All engines operating.* The steady gradient and rate of climb must be determined at each weight, altitude, and ambient temperature within the operational limits established by the applicant with—

(1) Not more than maximum continuous power on each engine;

(2) The landing gear retracted;

(3) The wing flaps retracted; and

(4) A climb speed not less than 1.3 $V_{S1}$.

(b) *One engine inoperative.* The steady gradient and rate of climb/descent must be determined at each weight, altitude, and ambient temperature within the operational limits established by the applicant with—

(1) The critical engine inoperative and its propeller in the minimum drag position;

(2) The remaining engine(s) at not more than maximum continuous power;

(3) The landing gear retracted;

(4) The wing flaps retracted; and

(5) A climb speed not less than 1.2 $V_{S1}$.

[Doc. No. 27807, 61 FR 5187, Feb. 9, 1996]

### §23.71 Glide: Single-engine airplanes.

The maximum horizontal distance traveled in still air, in nautical miles, per 1,000 feet of altitude lost in a glide, and the speed necessary to achieve this must be determined with the engine inoperative, its propeller in the minimum drag position, and landing gear and wing flaps in the most favorable available position.

[Doc. No. 27807, 61 FR 5187, Feb. 9, 1996]

### §23.73 Reference landing approach speed.

(a) For normal, utility, and acrobatic category reciprocating engine-powered

airplanes of 6,000 pounds or less maximum weight, the reference landing approach speed, $V_{REF}$, must not be less than the greater of $V_{MC}$, determined in § 23.149(b) with the wing flaps in the most extended takeoff position, and 1.3 $V_{SO}$.

(b) For normal, utility, and acrobatic category reciprocating engine-powered airplanes of more than 6,000 pounds maximum weight, and turbine engine-powered airplanes in the normal, utility, and acrobatic category, the reference landing approach speed, $V_{REF}$, must not be less than the greater of $V_{MC}$, determined in § 23.149(c), and 1.3 $V_{SO}$.

(c) For commuter category airplanes, the reference landing approach speed, $V_{REF}$, must not be less than the greater of 1.05 $V_{MC}$, determined in § 23.149(c), and 1.3 $V_{SO}$.

[Doc. No. 27807, 61 FR 5187, Feb. 9, 1996]

### § 23.75 Landing distance.

The horizontal distance necessary to land and come to a complete stop from a point 50 feet above the landing surface must be determined, for standard temperatures at each weight and altitude within the operational limits established for landing, as follows:

(a) A steady approach at not less than $V_{REF}$, determined in accordance with § 23.73 (a), (b), or (c), as appropriate, must be maintained down to the 50 foot height and—

(1) The steady approach must be at a gradient of descent not greater than 5.2 percent (3 degrees) down to the 50-foot height.

(2) In addition, an applicant may demonstrate by tests that a maximum steady approach gradient steeper than 5.2 percent, down to the 50-foot height, is safe. The gradient must be established as an operating limitation and the information necessary to display the gradient must be available to the pilot by an appropriate instrument.

(b) A constant configuration must be maintained throughout the maneuver.

(c) The landing must be made without excessive vertical acceleration or tendency to bounce, nose over, ground loop, porpoise, or water loop.

(d) It must be shown that a safe transition to the balked landing conditions of § 23.77 can be made from the conditions that exist at the 50 foot height, at maximum landing weight, or at the maximum landing weight for altitude and temperature of § 23.63 (c)(2) or (d)(2), as appropriate.

(e) The brakes must be used so as to not cause excessive wear of brakes or tires.

(f) Retardation means other than wheel brakes may be used if that means—

(1) Is safe and reliable; and

(2) Is used so that consistent results can be expected in service.

(g) If any device is used that depends on the operation of any engine, and the landing distance would be increased when a landing is made with that engine inoperative, the landing distance must be determined with that engine inoperative unless the use of other compensating means will result in a landing distance not more than that with each engine operating.

[Amdt. 23–21, 43 FR 2318, Jan. 16, 1978, as amended by Amdt. 23–34, 52 FR 1828, Jan. 15, 1987; Amdt. 23–42, 56 FR 351, Jan. 3, 1991; Amdt. 23–50, 61 FR 5187, Feb. 9, 1996]

### § 23.77 Balked landing.

(a) Each normal, utility, and acrobatic category reciprocating engine-powered airplane at 6,000 pounds or less maximum weight must be able to maintain a steady gradient of climb at sea level of at least 3.3 percent with—

(1) Takeoff power on each engine;

(2) The landing gear extended;

(3) The wing flaps in the landing position, except that if the flaps may safely be retracted in two seconds or less without loss of altitude and without sudden changes of angle of attack, they may be retracted; and

(4) A climb speed equal to $V_{REF}$, as defined in § 23.73(a).

(b) Each normal, utility, and acrobatic category reciprocating engine-powered airplane of more than 6,000 pounds maximum weight and each normal, utility, and acrobatic category turbine engine-powered airplane must be able to maintain a steady gradient of climb of at least 2.5 percent with—

(1) Not more than the power that is available on each engine eight seconds after initiation of movement of the power controls from minimum flight-idle position;

(2) The landing gear extended;

(3) The wing flaps in the landing position; and

(4) A climb speed equal to $V_{REF}$, as defined in §23.73(b).

(c) Each commuter category airplane must be able to maintain a steady gradient of climb of at least 3.2 percent with—

(1) Not more than the power that is available on each engine eight seconds after initiation of movement of the power controls from the minimum flight idle position;

(2) Landing gear extended;

(3) Wing flaps in the landing position; and

(4) A climb speed equal to $V_{REF}$, as defined in §23.73(c).

[Doc. No. 27807, 61 FR 5187, Feb. 9, 1996]

FLIGHT CHARACTERISTICS

### §23.141 General.

The airplane must meet the requirements of §§23.143 through 23.253 at all practical loading conditions and operating altitudes for which certification has been requested, not exceeding the maximum operating altitude established under §23.1527, and without requiring exceptional piloting skill, alertness, or strength.

[Doc. No. 26269, 58 FR 42156, Aug. 6, 1993]

CONTROLLABILITY AND MANEUVERABILITY

### §23.143 General.

(a) The airplane must be safely controllable and maneuverable during all flight phases including—

(1) Takeoff;

(2) Climb;

(3) Level flight;

(4) Descent;

(5) Go-around; and

(6) Landing (power on and power off) with the wing flaps extended and retracted.

(b) It must be possible to make a smooth transition from one flight condition to another (including turns and slips) without danger of exceeding the limit load factor, under any probable operating condition (including, for multiengine airplanes, those conditions normally encountered in the sudden failure of any engine).

(c) If marginal conditions exist with regard to required pilot strength, the control forces necessary must be determined by quantitative tests. In no case may the control forces under the conditions specified in paragraphs (a) and (b) of this section exceed those prescribed in the following table:

| Values in pounds force applied to the relevant control | Pitch | Roll | Yaw |
|---|---|---|---|
| (a) For temporary application: | | | |
| Stick | 60 | 30 | ..... |
| Wheel (Two hands on rim) | 75 | 50 | ..... |
| Wheel (One hand on rim) | 50 | 25 | ..... |
| Rudder Pedal | ..... | ..... | 150 |
| (b) For prolonged application | 10 | 5 | 20 |

[Doc. No, 4080, 29 FR 17955, Dec. 18, 1964, as amended by Amdt. 23–14, 38 FR 31819, Nov. 19, 1973; Amdt. 23–17, 41 FR 55464, Dec. 20, 1976; Amdt. 23–45, 58 FR 42156, Aug. 6, 1993; Amdt. 23–50, 61 FR 5188, Feb. 9, 1996]

### §23.145 Longitudinal control.

(a) With the airplane as nearly as possible in trim at 1.3 $V_{S1}$, it must be possible, at speeds below the trim speed, to pitch the nose downward so that the rate of increase in airspeed allows prompt acceleration to the trim speed with—

(1) Maximum continuous power on each engine;

(2) Power off; and

(3) Wing flap and landing gear—

(i) retracted, and

(ii) extended.

(b) Unless otherwise required, it must be possible to carry out the following maneuvers without requiring the application of single-handed control forces exceeding those specified in §23.143(c). The trimming controls must not be adjusted during the maneuvers:

(1) With the landing gear extended, the flaps retracted, and the airplanes as nearly as possible in trim at 1.4 $V_{S1}$, extend the flaps as rapidly as possible and allow the airspeed to transition from 1.4$V_{S1}$ to 1.4 $V_{SO}$≦

(i) With power off; and

(ii) With the power necessary to maintain level flight in the initial condition.

(2) With landing gear and flaps extended, power off, and the airplane as nearly as possible in trim at 1.3 $V_{SO}$, quickly apply takeoff power and retract the flaps as rapidly as possible to the recommended go around setting

and allow the airspeed to transition from 1.3 $V_{SO}$ to 1.3 $V_{S1}$. Retract the gear when a positive rate of climb is established.

(3) With landing gear and flaps extended, in level flight, power necessary to attain level flight at 1.1 $V_{SO}$, and the airplane as nearly as possible in trim, it must be possible to maintain approximately level flight while retracting the flaps as rapidly as possible with simultaneous application of not more than maximum continuous power. If gated flat positions are provided, the flap retraction may be demonstrated in stages with power and trim reset for level flight at 1.1 $V_{S1}$, in the initial configuration for each stage—

(i) From the fully extended position to the most extended gated position;

(ii) Between intermediate gated positions, if applicable; and

(iii) From the least extended gated position to the fully retracted position.

(4) With power off, flaps and landing gear retracted and the airplane as nearly as possible in trim at 1.4 $V_{S1}$, apply takeoff power rapidly while maintaining the same airspeed.

(5) With power off, landing gear and flaps extended, and the airplane as nearly as possible in trim at $V_{REF}$, obtain and maintain airspeeds between 1.1 $V_{SO}$, and either 1.7 $V_{SO}$ or $V_{FE}$, whichever is lower without requiring the application of two-handed control forces exceeding those specified in § 23.143(c).

(6) With maximum takeoff power, landing gear retracted, flaps in the takeoff position, and the airplane as nearly as possible in trim at $V_{FE}$ appropriate to the takeoff flap position, retract the flaps as rapidly as possible while maintaining constant speed.

(c) At speeds above $V_{MO}/M_{MO}$, and up to the maximum speed shown under § 23.251, a maneuvering capability of 1.5 g must be demonstrated to provide a margin to recover from upset or inadvertent speed increase.

(d) It must be possible, with a pilot control force of not more than 10 pounds, to maintain a speed of not more than $V_{REF}$ during a power-off glide with landing gear and wing flaps extended, for any weight of the airplane, up to and including the maximum weight.

(e) By using normal flight and power controls, except as otherwise noted in paragraphs (e)(1) and (e)(2) of this section, it must be possible to establish a zero rate of descent at an attitude suitable for a controlled landing without exceeding the operational and structural limitations of the airplane, as follows:

(1) For single-engine and multiengine airplanes, without the use of the primary longitudinal control system.

(2) For multiengine airplanes—

(i) Without the use of the primary directional control; and

(ii) If a single failure of any one connecting or transmitting link would affect both the longitudinal and directional primary control system, without the primary longitudinal and directional control system.

[Doc. No. 26269, 58 FR 42157, Aug. 6, 1993; Amdt. 23–45, 58 FR 51970, Oct. 5, 1993, as amended by Amdt. 23–50, 61 FR 5188, Feb. 9, 1996]

### § 23.147 Directional and lateral control.

(a) For each multiengine airplane, it must be possible, while holding the wings level within five degrees, to make sudden changes in heading safely in both directions. This ability must be shown at 1.4 $V_{S1}$ with heading changes up to 15 degrees, except that the heading change at which the rudder force corresponds to the limits specified in § 23.143 need not be exceeded, with the—

(1) Critical engine inoperative and its propeller in the minimum drag position;

(2) Remaining engines at maximum continuous power;

(3) Landing gear—

(i) Retracted; and

(ii) Extended; and

(4) Flaps retracted.

(b) For each multiengine airplane, it must be possible to regain full control of the airplane without exceeding a bank angle of 45 degrees, reaching a dangerous attitude or encountering dangerous characteristics, in the event of a sudden and complete failure of the critical engine, making allowance for a delay of two seconds in the initiation of recovery action appropriate to the situation, with the airplane initially in trim, in the following condition:

(1) Maximum continuous power on each engine;

(2) The wing flaps retracted;

(3) The landing gear retracted;

(4) A speed equal to that at which compliance with §23.69(a) has been shown; and

(5) All propeller controls in the position at which compliance with §23.69(a) has been shown.

(c) For all airplanes, it must be shown that the airplane is safely controllable without the use of the primary lateral control system in any all-engine configuration(s) and at any speed or altitude within the approved operating envelope. It must also be shown that the airplane's flight characteristics are not impaired below a level needed to permit continued safe flight and the ability to maintain attitudes suitable for a controlled landing without exceeding the operational and structural limitations of the airplane. If a single failure of any one connecting or transmitting link in the lateral control system would also cause the loss of additional control system(s), compliance with the above requirement must be shown with those additional systems also assumed to be inoperative.

[Doc. No. 27807, 61 FR 5188, Feb. 9, 1996]

### §23.149 Minimum control speed.

(a) $V_{MC}$ is the calibrated airspeed at which, when the critical engine is suddenly made inoperative, it is possible to maintain control of the airplane with that engine still inoperative, and thereafter maintain straight flight at the same speed with an angle of bank of not more than 5 degrees. The method used to simulate critical engine failure must represent the most critical mode of powerplant failure expected in service with respect to controllability.

(b) $V_{MC}$ for takeoff must not exceed 1.2 $V_{S1}$, where $V_{S1}$ is determined at the maximum takeoff weight. $V_{MC}$ must be determined with the most unfavorable weight and center of gravity position and with the airplane airborne and the ground effect negligible, for the takeoff configuration(s) with—

(1) Maximum available takeoff power initially on each engine;

(2) The airplane trimmed for takeoff;

(3) Flaps in the takeoff position(s);

(4) Landing gear retracted; and

(5) All propeller controls in the recommended takeoff position throughout.

(c) For all airplanes except reciprocating engine-powered airplanes of 6,000 pounds or less maximum weight, the conditions of paragraph (a) of this section must also be met for the landing configuration with—

(1) Maximum available takeoff power initially on each engine;

(2) The airplane trimmed for an approach, with all engines operating, at $V_{REF}$, at an approach gradient equal to the steepest used in the landing distance demonstration of §23.75;

(3) Flaps in the landing position;

(4) Landing gear extended; and

(5) All propeller controls in the position recommended for approach with all engines operating.

(d) A minimum speed to intentionally render the critical engine inoperative must be established and designated as the safe, intentional, one-engine-inoperative speed, $V_{SSE}$.

(e) At $V_{MC}$, the rudder pedal force required to maintain control must not exceed 150 pounds and it must not be necessary to reduce power of the operative engine(s). During the maneuver, the airplane must not assume any dangerous attitude and it must be possible to prevent a heading change of more than 20 degrees.

(f) At the option of the applicant, to comply with the requirements of §23.51(c)(1), $V_{MCG}$ may be determined. $V_{MCG}$ is the minimum control speed on the ground, and is the calibrated airspeed during the takeoff run at which, when the critical engine is suddenly made inoperative, it is possible to maintain control of the airplane using the rudder control alone (without the use of nosewheel steering), as limited by 150 pounds of force, and using the lateral control to the extent of keeping the wings level to enable the takeoff to be safely continued. In the determination of $V_{MCG}$, assuming that the path of the airplane accelerating with all engines operating is along the centerline of the runway, its path from the point at which the critical engine is made inoperative to the point at which recovery to a direction parallel to the centerline is completed may not deviate

more than 30 feet laterally from the centerline at any point. $V_{MCG}$ must be established with—

(1) The airplane in each takeoff configuration or, at the option of the applicant, in the most critical takeoff configuration;

(2) Maximum available takeoff power on the operating engines;

(3) The most unfavorable center of gravity;

(4) The airplane trimmed for takeoff; and

(5) The most unfavorable weight in the range of takeoff weights.

[Doc. No. 27807, 61 FR 5189, Feb. 9, 1996]

### § 23.151 Acrobatic maneuvers.

Each acrobatic and utility category airplane must be able to perform safely the acrobatic maneuvers for which certification is requested. Safe entry speeds for these maneuvers must be determined.

### § 23.153 Control during landings.

It must be possible, while in the landing configuration, to safely complete a landing without exceeding the one-hand control force limits specified in § 23.143(c) following an approach to land—

(a) At a speed of $V_{REF}$ minus 5 knots;

(b) With the airplane in trim, or as nearly as possible in trim and without the trimming control being moved throughout the maneuver;

(c) At an approach gradient equal to the steepest used in the landing distance demonstration of § 23.75; and

(d) With only those power changes, if any, that would be made when landing normally from an approach at $V_{REF}$.

[Doc. No. 27807, 61 FR 5189, Feb. 9, 1996]

### § 23.155 Elevator control force in maneuvers.

(a) The elevator control force needed to achieve the positive limit maneuvering load factor may not be less than:

(1) For wheel controls, W/100 (where W is the maximum weight) or 20 pounds, whichever is greater, except that it need not be greater than 50 pounds; or

(2) For stick controls, W/140 (where W is the maximum weight) or 15 pounds, whichever is greater, except that it need not be greater than 35 pounds.

(b) The requirement of paragraph (a) of this section must be met at 75 percent of maximum continuous power for reciprocating engines, or the maximum continuous power for turbine engines, and with the wing flaps and landing gear retracted—

(1) In a turn, with the trim setting used for wings level flight at $V_O$; and

(2) In a turn with the trim setting used for the maximum wings level flight speed, except that the speed may not exceed $V_{NE}$ or $V_{MO}/M_{MO}$, whichever is appropriate.

(c) There must be no excessive decrease in the gradient of the curve of stick force versus maneuvering load factor with increasing load factor.

[Amdt. 23–14, 38 FR 31819, Nov. 19, 1973; 38 FR 32784, Nov. 28, 1973, as amended by Amdt. 23–45, 58 FR 42158, Aug. 6, 1993; Amdt. 23–50, 61 FR 5189 Feb. 9, 1996]

### § 23.157 Rate of roll.

(a) *Takeoff.* It must be possible, using a favorable combination of controls, to roll the airplane from a steady 30-degree banked turn through an angle of 60 degrees, so as to reverse the direction of the turn within:

(1) For an airplane of 6,000 pounds or less maximum weight, 5 seconds from initiation of roll; and

(2) For an airplane of over 6,000 pounds maximum weight,

$$(W+500)/1,300$$

seconds, but not more than 10 seconds, where W is the weight in pounds.

(b) The requirement of paragraph (a) of this section must be met when rolling the airplane in each direction with—

(1) Flaps in the takeoff position;

(2) Landing gear retracted;

(3) For a single-engine airplane, at maximum takeoff power; and for a multiengine airplane with the critical engine inoperative and the propeller in the minimum drag position, and the other engines at maximum takeoff power; and

(4) The airplane trimmed at a speed equal to the greater of 1.2 $V_{S1}$ or 1.1 $V_{MC}$, or as nearly as possible in trim for straight flight.

(c) *Approach.* It must be possible, using a favorable combination of controls, to roll the airplane from a steady 30-degree banked turn through an angle of 60 degrees, so as to reverse the direction of the turn within:

(1) For an airplane of 6,000 pounds or less maximum weight, 4 seconds from initiation of roll; and

(2) For an airplane of over 6,000 pounds maximum weight,

$$(W+2{,}800)/2{,}200$$

seconds, but not more than 7 seconds, where W is the weight in pounds.

(d) The requirement of paragraph (c) of this section must be met when rolling the airplane in each direction in the following conditions—

(1) Flaps in the landing position(s);

(2) Landing gear extended;

(3) All engines operating at the power for a 3 degree approach; and

(4) The airplane trimmed at $V_{REF}$.

[Amdt. 23–14, 38 FR 31819, Nov. 19, 1973, as amended by Amdt. 23–45, 58 FR 42158, Aug. 6, 1993; Amdt. 23–50, 61 FR 5189, Feb. 9, 1996]

TRIM

## §23.161 Trim.

(a) *General.* Each airplane must meet the trim requirements of this section after being trimmed and without further pressure upon, or movement of, the primary controls or their corresponding trim controls by the pilot or the automatic pilot. In addition, it must be possible, in other conditions of loading, configuration, speed and power to ensure that the pilot will not be unduly fatigued or distracted by the need to apply residual control forces exceeding those for prolonged application of §23.143(c). This applies in normal operation of the airplane and, if applicable, to those conditions associated with the failure of one engine for which performance characteristics are established.

(b) *Lateral and directional trim.* The airplane must maintain lateral and directional trim in level flight with the landing gear and wing flaps retracted as follows:

(1) For normal, utility, and acrobatic category airplanes, at a speed of 0.9 $V_H$, $V_C$, or $V_{MO}/M_O$, whichever is lowest; and

(2) For commuter category airplanes, at all speeds from 1.4 $V_{S1}$ to the lesser of $V_H$ or $V_{MO}/M_{MO}$.

(c) *Longitudinal trim.* The airplane must maintain longitudinal trim under each of the following conditions:

(1) A climb with—

(i) Takeoff power, landing gear retracted, wing flaps in the takeoff position(s), at the speeds used in determining the climb performance required by §23.65; and

(ii) Maximum continuous power at the speeds and in the configuration used in determining the climb performance required by §23.69(a).

(2) Level flight at all speeds from the lesser of $V_H$ and either $V_{NO}$ or $V_{MO}/M_{MO}$ (as appropriate), to 1.4 $V_{S1}$, with the landing gear and flaps retracted.

(3) A descent at $V_{NO}$ or $V_{MO}/M_{MO}$, whichever is applicable, with power off and with the landing gear and flaps retracted.

(4) Approach with landing gear extended and with—

(i) A 3 degree angle of descent, with flaps retracted and at a speed of 1.4 $V_{S1}$;

(ii) A 3 degree angle of descent, flaps in the landing position(s) at $V_{REF}$; and

(iii) An approach gradient equal to the steepest used in the landing distance demonstrations of §23.75, flaps in the landing position(s) at $V_{REF}$.

(d) In addition, each multiple airplane must maintain longitudinal and directional trim, and the lateral control force must not exceed 5 pounds at the speed used in complying with §23.67(a), (b)(2), or (c)(3), as appropriate, with—

(1) The critical engine inoperative, and if applicable, its propeller in the minimum drag position;

(2) The remaining engines at maximum continuous power;

(3) The landing gear retracted;

(4) Wing flaps retracted; and

(5) An angle of bank of not more than five degrees.

(e) In addition, each commuter category airplane for which, in the determination of the takeoff path in accordance with §23.57, the climb in the takeoff configuration at $V_2$ extends beyond 400 feet above the takeoff surface, it must be possible to reduce the longitudinal and lateral control forces to 10 pounds and 5 pounds, respectively, and

the directional control force must not exceed 50 pounds at $V_2$ with—

(1) The critical engine inoperative and its propeller in the minimum drag position;

(2) The remaining engine(s) at takeoff power;

(3) Landing gear retracted;

(4) Wing flaps in the takeoff position(s); and

(5) An angle of bank not exceeding 5 degrees.

[Doc. No. 4080, 29 FR 17955, Dec. 18, 1964, as amended by Amdt. 23–21, 43 FR 2318, Jan. 16, 1978; Amdt. 23–34, 52 FR 1828, Jan. 15, 1987; Amdt. 23–42, 56 FR 351, Jan. 3, 1991; 56 FR 5455, Feb. 11, 1991; Amdt. 23–50, 61 FR 5189, Feb. 9, 1996]

STABILITY

### § 23.171 General.

The airplane must be longitudinally, directionally, and laterally stable under §§ 23.173 through 23.181. In addition, the airplane must show suitable stability and control ''feel'' (static stability) in any condition normally encountered in service, if flight tests show it is necessary for safe operation.

### § 23.173 Static longitudinal stability.

Under the conditions specified in § 23.175 and with the airplane trimmed as indicated, the characteristics of the elevator control forces and the friction within the control system must be as follows:

(a) A pull must be required to obtain and maintain speeds below the specified trim speed and a push required to obtain and maintain speeds above the specified trim speed. This must be shown at any speed that can be obtained, except that speeds requiring a control force in excess of 40 pounds or speeds above the maximum allowable speed or below the minimum speed for steady unstalled flight, need not be considered.

(b) The airspeed must return to within the tolerances specified for applicable categories of airplanes when the control force is slowly released at any speed within the speed range specified in paragraph (a) of this section. The applicable tolerances are—

(1) The airspeed must return to within plus or minus 10 percent of the original trim airspeed; and

(2) For commuter category airplanes, the airspeed must return to within plus or minus 7.5 percent of the original trim airspeed for the cruising condition specified in § 23.175(b).

(c) The stick force must vary with speed so that any substantial speed change results in a stick force clearly perceptible to the pilot.

[Doc. No. 4080, 29 FR 17955, Dec. 18, 1964, as amended by Amdt. 23–14, 38 FR 31820 Nov. 19, 1973; Amdt. 23–34, 52 FR 1828, Jan. 15, 1987]

### § 23.175 Demonstration of static longitudinal stability.

Static longitudinal stability must be shown as follows:

(a) *Climb.* The stick force curve must have a stable slope at speeds between 85 and 115 percent of the trim speed, with—

(1) Flaps retracted;

(2) Landing gear retracted;

(3) Maximum continuous power; and

(4) The airplane trimmed at the speed used in determining the climb performance required by § 23.69(a).

(b) *Cruise.* With flaps and landing gear retracted and the airplane in trim with power for level flight at representative cruising speeds at high and low altitudes, including speeds up to $V_{NO}$ or $V_{MO}/M_{MO}$, as appropriate, except that the speed need not exceed $V_H$—

(1) For normal, utility, and acrobatic category airplanes, the stick force curve must have a stable slope at all speeds within a range that is the greater of 15 percent of the trim speed plus the resulting free return speed range, or 40 knots plus the resulting free return speed range, above and below the trim speed, except that the slope need not be stable—

(i) At speeds less than 1.3 $V_{S1}$; or

(ii) For airplanes with $V_{NE}$ established under § 23.1505(a), at speeds greater than $V_{NE}$; or

(iii) For airplanes with $V_{MO}/M_{MO}$ established under § 23.1505(c), at speeds greater than $V_{FC}/M_{FC}$.

(2) For commuter category airplanes, the stick force curve must have a stable slope at all speeds within a range of 50 knots plus the resulting free return speed range, above and below the trim

speed, except that the slope need not be stable—

(i) At speeds less than 1.4 $V_{S1}$; or

(ii) At speeds greater than $V_{FC}/M_{FC}$; or

(iii) At speeds that require a stick force greater than 50 pounds.

(c) *Landing.* The stick force curve must have a stable slope at speeds between 1.1 $V_{S1}$ and 1.8 $V_{S1}$ with—

(1) Flaps in the landing position;

(2) Landing gear extended; and

(3) The airplane trimmed at—

(i) $V_{REF}$, or the minimum trim speed if higher, with power off; and

(ii) $V_{REF}$ with enough power to maintain a 3 degree angle of descent.

[Doc. No. 27807, 61 FR 5190, Feb. 9, 1996]

### §23.177 Static directional and lateral stability.

(a) The static directional stability, as shown by the tendency to recover from a wings level sideslip with the rudder free, must be positive for any landing gear and flap position appropriate to the takeoff, climb, cruise, approach, and landing configurations. This must be shown with symmetrical power up to maximum continuous power, and at speeds from 1.2 $V_{S1}$ up to the maximum allowable speed for the condition being investigated. The angel of sideslip for these tests must be appropriate to the type of airplane. At larger angles of sideslip, up to that at which full rudder is used or a control force limit in §23.143 is reached, whichever occurs first, and at speeds from 1.2 $V_{S1}$ to $V_O$, the rudder pedal force must not reverse.

(b) The static lateral stability, as shown by the tendency to raise the low wing in a sideslip, must be positive for all landing gear and flap positions. This must be shown with symmetrical power up to 75 percent of maximum continuous power at speeds above 1.2 $V_{S1}$ in the take off configuration(s) and at speeds above 1.3 $V_{S1}$ in other configurations, up to the maximum allowable speed for the configuration being investigated, in the takeoff, climb, cruise, and approach configurations. For the landing configuration, the power must be that necessary to maintain a 3 degree angle of descent in coordinated flight. The static lateral stability must not be negative at 1.2 $V_{S1}$ in the takeoff configuration, or at 1.3 $V_{S1}$ in other configurations. The angle of sideslip for these tests must be appropriate to the type of airplane, but in no case may the constant heading sideslip angle be less than that obtainable with a 10 degree bank, or if less, the maximum bank angle obtainable with full rudder deflection or 150 pound rudder force.

(c) Paragraph (b) of this section does not apply to acrobatic category airplanes certificated for inverted flight.

(d) In straight, steady slips at 1.2 $V_{S1}$ for any landing gear and flap positions, and for any symmetrical power conditions up to 50 percent of maximum continuous power, the aileron and rudder control movements and forces must increase steadily, but not necessarily in constant proportion, as the angle of sideslip is increased up to the maximum appropriate to the type of airplane. At larger slip angles, up to the angle at which full rudder or aileron control is used or a control force limit contained in §23.143 is reached, the aileron and rudder control movements and forces must not reverse as the angle of sideslip is increased. Rapid entry into, and recovery from, a maximum sideslip considered appropriate for the airplane must not result in uncontrollable flight characteristics.

[Doc. No. 27807, 61 FR 5190, Feb. 9, 1996]

### §23.181 Dynamic stability.

(a) Any short period oscillation not including combined lateral-directional oscillations occurring between the stalling speed and the maximum allowable speed appropriate to the configuration of the airplane must be heavily damped with the primary controls—

(1) Free; and

(2) In a fixed position.

(b) Any combined lateral-directional oscillations (''Dutch roll'') occurring between the stalling speed and the maximum allowable speed appropriate to the configuration of the airplane must be damped to 1/10 amplitude in 7 cycles with the primary controls—

(1) Free; and

(2) In a fixed position.

(c) If it is determined that the function of a stability augmentation system, reference §23.672, is needed to

meet the flight characteristic requirements of this part, the primary control requirements of paragraphs (a)(2) and (b)(2) of this section are not applicable to the tests needed to verify the acceptability of that system.

(d) During the conditions as specified in § 23.175, when the longitudinal control force required to maintain speeds differing from the trim speed by at least plus and minus 15 percent is suddenly released, the response of the airplane must not exhibit any dangerous characteristics nor be excessive in relation to the magnitude of the control force released. Any long-period oscillation of flight path, phugoid oscillation, that results must not be so unstable as to increase the pilot's workload or otherwise endanger the airplane.

[Amdt. 23–21, 43 FR 2318, Jan. 16, 1978, as amended by Amdt. 23–45, 58 FR 42158, Aug. 6, 1993]

STALLS

### § 23.201 Wings level stall.

(a) It must be possible to produce and to correct roll by unreversed use of the rolling control and to produce and to correct yaw by unreversed use of the directional control, up to the time the airplane stalls.

(b) The wings level stall characteristics must be demonstrated in flight as follows. Starting from a speed at least 10 knots above the stall speed, the elevator control must be pulled back so that the rate of speed reduction will not exceed one knot per second until a stall is produced, as shown by either:

(1) An uncontrollable downward pitching motion of the airplane;

(2) A downward pitching motion of the airplane that results from the activation of a stall avoidance device (for example, stick pusher); or

(3) The control reaching the stop.

(c) Normal use of elevator control for recovery is allowed after the downward pitching motion of paragraphs (b)(1) or (b)(2) of this section has unmistakably been produced, or after the control has been held against the stop for not less than the longer of two seconds or the time employed in the minimum steady slight speed determination of § 23.49.

(d) During the entry into and the recovery from the maneuver, it must be possible to prevent more than 15 degrees of roll or yaw by the normal use of controls.

(e) Compliance with the requirements of this section must be shown under the following conditions:

(1) *Wing flaps.* Retracted, fully extended, and each intermediate normal operating position.

(2) *Landing gear.* Retracted and extended.

(3) *Cowl flaps.* Appropriate to configuration.

(4) *Power:*

(i) Power off; and

(ii) 75 percent of maximum continuous power. However, if the power-to-weight ratio at 75 percent of maximum continuous power result in extreme nose-up attitudes, the test may be carried out with the power required for level flight in the landing configuration at maximum landing weight and a speed of 1.4 $V_{SO}$, except that the power may not be less than 50 percent of maximum continuous power.

(5) *Trim.* The airplane trimmed at a speed as near 1.5 $V_{S1}$ as practicable.

(6) *Propeller.* Full increase r.p.m. position for the power off condition.

[Doc. No. 27807, 61 FR 5191, Feb. 9, 1996]

### § 23.203 Turning flight and accelerated turning stalls.

Turning flight and accelerated turning stalls must be demonstrated in tests as follows:

(a) Establish and maintain a coordinated turn in a 30 degree bank. Reduce speed by steadily and progressively tightening the turn with the elevator until the airplane is stalled, as defined in § 23.201(b). The rate of speed reduction must be constant, and—

(1) For a turning flight stall, may not exceed one knot per second; and

(2) For an accelerated turning stall, be 3 to 5 knots per second with steadily increasing normal acceleration.

(b) After the airplane has stalled, as defined in § 23.201(b), it must be possible to regain wings level flight by normal use of the flight controls, but without increasing power and without—

(1) Excessive loss of altitude;

(2) Undue pitchup;

(3) Uncontrollable tendency to spin;

(4) Exceeding a bank angle of 60 degrees in the original direction of the

turn or 30 degrees in the opposite direction in the case of turning flight stalls;

(5) Exceeding a bank angle of 90 degrees in the original direction of the turn or 60 degrees in the opposite direction in the case of accelerated turning stalls; and

(6) Exceeding the maximum permissible speed or allowable limit load factor.

(c) Compliance with the requirements of this section must be shown under the following conditions:

(1) *Wing flaps:* Retracted, fully extended, and each intermediate normal operating position;

(2) *Landing gear:* Retracted and extended;

(3) *Cowl flaps:* Appropriate to configuration;

(4) *Power:*

(i) Power off; and

(ii) 75 percent of maximum continuous power. However, if the power-to-weight ratio at 75 percent of maximum continuous power results in extreme nose-up attitudes, the test may be carried out with the power required for level flight in the landing configuration at maximum landing weight and a speed of 1.4 $V_{SO}$, except that the power may not be less than 50 percent of maximum continuous power.

(5) *Trim:* The airplane trimmed at a speed as near 1.5 $V_{S1}$ as practicable.

(6) *Propeller.* Full increase rpm position for the power off condition.

[Amdt. 23–14, 38 FR 31820, Nov. 19, 1973, as amended by Amdt. 23–45, 58 FR 42159, Aug. 6, 1993; Amdt. 23–50, 61 FR 5191, Feb. 9, 1996]

### §23.207 Stall warning.

(a) There must be a clear and distinctive stall warning, with the flaps and landing gear in any normal position, in straight and turning flight.

(b) The stall warning may be furnished either through the inherent aerodynamic qualities of the airplane or by a device that will give clearly distinguishable indications under expected conditions of flight. However, a visual stall warning device that requires the attention of the crew within the cockpit is not acceptable by itself.

(c) During the stall tests required by §23.201(b) and §23.203(a)(1), the stall warning must begin at a speed exceeding the stalling speed by a margin of not less than 5 knots and must continue until the stall occurs.

(d) When following procedures furnished in accordance with §23.1585, the stall warning must not occur during a takeoff with all engines operating, a takeoff continued with one engine inoperative, or during an approach to landing.

(e) During the stall tests required by §23.203(a)(2), the stall warning must begin sufficiently in advance of the stall for the stall to be averted by pilot action taken after the stall warning first occurs.

(f) For acrobatic category airplanes, an artificial stall warning may be mutable, provided that it is armed automatically during takeoff and rearmed automatically in the approach configuration.

[Amdt. 23–7, 34 FR 13087, Aug. 13, 1969, as amended by Amdt. 23–45, 58 FR 42159, Aug. 6, 1993; Amdt. 23–50, 61 FR 5191, Feb. 9, 1996]

## SPINNING

### §23.221 Spinning.

(a) *Normal category airplanes.* A single-engine, normal category airplane must be able to recover from a one-turn spin or a three-second spin, whichever takes longer, in not more than one additional turn after initiation of the first control action for recovery, or demonstrate compliance with the optional spin resistant requirements of this section.

(1) The following apply to one turn or three second spins:

(i) For both the flaps-retracted and flaps-extended conditions, the applicable airspeed limit and positive limit maneuvering load factor must not be exceeded;

(ii) No control forces or characteristic encountered during the spin or recovery may adversely affect prompt recovery;

(iii) It must be impossible to obtain unrecoverable spins with any use of the flight or engine power controls either at the entry into or during the spin; and

(iv) For the flaps-extended condition, the flaps may be retracted during the recovery but not before rotation has ceased.

(2) At the applicant's option, the airplane may be demonstrated to be spin resistant by the following:

(i) During the stall maneuver contained in § 23.201, the pitch control must be pulled back and held against the stop. Then, using ailerons and rudders in the proper direction, it must be possible to maintain wings-level flight within 15 degrees of bank and to roll the airplane from a 30 degree bank in one direction to a 30 degree bank in the other direction;

(ii) Reduce the airplane speed using pitch control at a rate of approximately one knot per second until the pitch control reaches the stop; then, with the pitch control pulled back and held against the stop, apply full rudder control in a manner to promote spin entry for a period of seven seconds or through a 360 degree heading change, whichever occurs first. If the 360 degree heading change is reached first, it must have taken no fewer than four seconds. This maneuver must be performed first with the ailerons in the neutral position, and then with the ailerons deflected opposite the direction of turn in the most adverse manner. Power and airplane configuration must be set in accordance with § 23.201(e) without change during the maneuver. At the end of seven seconds or a 360 degree heading change, the airplane must respond immediately and normally to primary flight controls applied to regain coordinated, unstalled flight without reversal of control effect and without exceeding the temporary control forces specified by § 23.143(c); and

(iii) Compliance with §§ 23.201 and 23.203 must be demonstrated with the airplane in uncoordinated flight, corresponding to one ball width displacement on a slip-skid indicator, unless one ball width displacement cannot be obtained with full rudder, in which case the demonstration must be with full rudder applied.

(b) *Utility category airplanes.* A utility category airplane must meet the requirements of paragraph (a) of this section. In addition, the requirements of paragraph (c) of this section and § 23.807(b)(7) must be met if approval for spinning is requested.

(c) *Acrobatic category airplanes.* An acrobatic category airplane must meet the spin requirements of paragraph (a) of this section and § 23.807(b)(6). In addition, the following requirements must be met in each configuration for which approval for spinning is requested:

(1) The airplane must recover from any point in a spin up to and including six turns, or any greater number of turns for which certification is requested, in not more than one and one-half additional turns after initiation of the first control action for recovery. However, beyond three turns, the spin may be discontinued if spiral characteristics appear.

(2) The applicable airspeed limits and limit maneuvering load factors must not be exceeded. For flaps-extended configurations for which approval is requested, the flaps must not be retracted during the recovery.

(3) It must be impossible to obtain unrecoverable spins with any use of the flight or engine power controls either at the entry into or during the spin.

(4) There must be no characteristics during the spin (such as excessive rates of rotation or extreme oscillatory motion) that might prevent a successful recovery due to disorientation or incapacitation of the pilot.

[Doc. No. 27807, 61 FR 5191, Feb. 9, 1996]

## GROUND AND WATER HANDLING CHARACTERISTICS

### § 23.231 Longitudinal stability and control.

(a) A landplane may have no uncontrollable tendency to nose over in any reasonably expected operating condition, including rebound during landing or takeoff. Wheel brakes must operate smoothly and may not induce any undue tendency to nose over.

(b) A seaplane or amphibian may not have dangerous or uncontrollable porpoising characteristics at any normal operating speed on the water.

### § 23.233 Directional stability and control.

(a) A 90 degree cross-component of wind velocity, demonstrated to be safe for taxiing, takeoff, and landing must be established and must be not less than 0.2 $V_{SO}$.

(b) The airplane must be satisfactorily controllable in power-off landings at normal landing speed, without using brakes or engine power to maintain a straight path until the speed has decreased to at least 50 percent of the speed at touchdown.

(c) The airplane must have adequate directional control during taxiing.

(d) Seaplanes must demonstrate satisfactory directional stability and control for water operations up to the maximum wind velocity specified in paragraph (a) of this section.

[Doc. No. 4080, 29 FR 17955, Dec. 18, 1964, as amended by Amdt. 23–45, 58 FR 42159, Aug. 6, 1993; Amdt. 23–50, 61 FR 5192, Feb. 9, 1996]

### §23.235 Operation on unpaved surfaces.

The airplane must be demonstrated to have satisfactory characteristics and the shock-absorbing mechanism must not damage the structure of the airplane when the airplane is taxied on the roughest ground that may reasonably be expected in normal operation and when takeoffs and landings are performed on unpaved runways having the roughest surface that may reasonably be expected in normal operation.

[Doc. No. 27807, 61 FR 5192, Feb. 9, 1996]

### §23.237 Operation on water.

A wave height, demonstrated to be safe for operation, and any necessary water handling procedures for seaplanes and amphibians must be established.

[Doc. No. 27807, 61 FR 5192, Feb. 9, 1996]

### §23.239 Spray characteristics.

Spray may not dangerously obscure the vision of the pilots or damage the propellers or other parts of a seaplane or amphibian at any time during taxiing, takeoff, and landing.

## MISCELLANEOUS FLIGHT REQUIREMENTS

### §23.251 Vibration and buffeting.

There must be no vibration or buffeting severe enough to result in structural damage, and each part of the airplane must be free from excessive vibration, under any appropriate speed and power conditions up to $V_D/M_D$. In addition, there must be no buffeting in any normal flight condition severe enough to interfere with the satisfactory control of the airplane or cause excessive fatigue to the flight crew. Stall warning buffeting within these limits is allowable.

[Doc. No. 26269, 58 FR 42159, Aug. 6, 1993]

### §23.253 High speed characteristics.

If a maximum operating speed $V_{MO}$ $M_{MO}$ is established under §23.1505(c), the following speed increase and recovery characteristics must be met:

(a) Operating conditions and characteristics likely to cause inadvertent speed increases (including upsets in pitch and roll) must be simulated with the airplane trimmed at any likely speed up to $V_{MO}/M_{MO}$. These conditions and characteristics include gust upsets, inadvertent control movements, low stick force gradients in relation to control friction, passenger movement, leveling off from climb, and descent from Mach to airspeed limit altitude.

(b) Allowing for pilot reaction time after occurrence of the effective inherent or artificial speed warning specified in §23.1303, it must be shown that the airplane can be recovered to a normal attitude and its speed reduced to $V_{MO}/M_{MO}$, without—

(1) Exceeding $V_D/M_D$, the maximum speed shown under §23.251, or the structural limitations; or

(2) Buffeting that would impair the pilot's ability to read the instruments or to control the airplane for recovery.

(c) There may be no control reversal about any axis at any speed up to the maximum speed shown under §23.251. Any reversal of elevator control force or tendency of the airplane to pitch, roll, or yaw must be mild and readily controllable, using normal piloting techniques.

[Amdt. 23–7, 34 FR 13087, Aug. 13, 1969; as amended by Amdt. 23–26, 45 FR 60170, Sept. 11, 1980; Amdt. 23–45, 58 FR 42160, Aug. 6, 1993; Amdt. 23–50, 61 FR 5192, Feb. 9, 1996]

## Subpart C—Structure

GENERAL

### § 23.301 Loads.

(a) Strength requirements are specified in terms of limit loads (the maximum loads to be expected in service) and ultimate loads (limit loads multiplied by prescribed factors of safety). Unless otherwise provided, prescribed loads are limit loads.

(b) Unless otherwise provided, the air, ground, and water loads must be placed in equilibrium with inertia forces, considering each item of mass in the airplane. These loads must be distributed to conservatively approximate or closely represent actual conditions. Methods used to determine load intensities and distribution on canard and tandem wing configurations must be validated by flight test measurement unless the methods used for determining those loading conditions are shown to be reliable or conservative on the configuration under consideration.

(c) If deflections under load would significantly change the distribution of external or internal loads, this redistribution must be taken into account.

(d) Simplified structural design criteria may be used if they result in design loads not less than those prescribed in §§ 23.331 through 23.521. For airplane configurations described in appendix A, § 23.1, the design criteria of appendix A of this part are an approved equivalent of §§ 23.321 through 23.459. If appendix A of this part is used, the entire appendix must be substituted for the corresponding sections of this part.

[Doc. No. 4080, 29 FR 17955, Dec. 18, 1964; 30 FR 258, Jan. 9, 1965, as amended by Amdt. 23–28, 47 FR 13315, Mar. 29, 1982; Amdt. 23–42, 56 FR 352, Jan. 3, 1991; Amdt. 23–48, 61 FR 5143, Feb. 9, 1996]

### § 23.302 Canard or tandem wing configurations.

The forward structure of a canard or tandem wing configuration must:

(a) Meet all requirements of subpart C and subpart D of this part applicable to a wing; and

(b) Meet all requirements applicable to the function performed by these surfaces.

[Amdt. 23–42, 56 FR 352, Jan. 3, 1991]

### § 23.303 Factor of safety.

Unless otherwise provided, a factor of safety of 1.5 must be used.

### § 23.305 Strength and deformation.

(a) The structure must be able to support limit loads without detrimental, permanent deformation. At any load up to limit loads, the deformation may not interfere with safe operation.

(b) The structure must be able to support ultimate loads without failure for at least three seconds, except local failures or structural instabilities between limit and ultimate load are acceptable only if the structure can sustain the required ultimate load for at least three seconds. However when proof of strength is shown by dynamic tests simulating actual load conditions, the three second limit does not apply.

[Doc. No. 4080, 29 FR 17955, Dec. 18, 1964, as amended by Amdt. 23–45, 58 FR 42160, Aug. 6, 1993]

### § 23.307 Proof of structure.

(a) Compliance with the strength and deformation requirements of § 23.305 must be shown for each critical load condition. Structural analysis may be used only if the structure conforms to those for which experience has shown this method to be reliable. In other cases, substantiating load tests must be made. Dynamic tests, including structural flight tests, are acceptable if the design load conditions have been simulated.

(b) Certain parts of the structure must be tested as specified in Subpart D of this part.

FLIGHT LOADS

### § 23.321 General.

(a) Flight load factors represent the ratio of the aerodynamic force component (acting normal to the assumed longitudinal axis of the airplane) to the weight of the airplane. A positive flight load factor is one in which the aerodynamic force acts upward, with respect to the airplane.

(b) Compliance with the flight load requirements of this subpart must be shown—

(1) At each critical altitude within the range in which the airplane may be expected to operate;

(2) At each weight from the design minimum weight to the design maximum weight; and

(3) For each required altitude and weight, for any practicable distribution of disposable load within the operating limitations specified in §§23.1583 through 23.1589.

(c) When significant, the effects of compressibility must be taken into account.

[Doc. No. 4080, 29 FR 17955, Dec. 18, 1964, as amended by Amdt. 23–45, 58 FR 42160, Aug. 6, 1993]

### §23.331 Symmetrical flight conditions.

(a) The appropriate balancing horizontal tail load must be accounted for in a rational or conservative manner when determining the wing loads and linear inertia loads corresponding to any of the symmetrical flight conditions specified in §§23.333 through 23.341.

(b) The incremental horizontal tail loads due to maneuvering and gusts must be reacted by the angular inertia of the airplane in a rational or conservative manner.

(c) Mutual influence of the aerodynamic surfaces must be taken into account when determining flight loads.

[Doc. No. 4080, 29 FR 17955, Dec. 18, 1964; 30 FR 258, Jan. 9, 1965, as amended by Amdt. 23–42, 56 FR 352, Jan. 3, 1991]

### §23.333 Flight envelope.

(a) *General.* Compliance with the strength requirements of this subpart must be shown at any combination of airspeed and load factor on and within the boundaries of a flight envelope (similar to the one in paragraph (d) of this section) that represents the envelope of the flight loading conditions specified by the maneuvering and gust criteria of paragraphs (b) and (c) of this section respectively.

(b) *Maneuvering envelope.* Except where limited by maximum (static) lift coefficients, the airplane is assumed to be subjected to symmetrical maneuvers resulting in the following limit load factors:

(1) The positive maneuvering load factor specified in §23.337 at speeds up to $V_D$;

(2) The negative maneuvering load factor specified in §23.337 at $V_C$; and

(3) Factors varying linearly with speed from the specified value at $V_C$ to 0.0 at $V_D$ for the normal and commuter category, and —1.0 at $V_D$ for the acrobatic and utility categories.

(c) *Gust envelope.* (1) The airplane is assumed to be subjected to symmetrical vertical gusts in level flight. The resulting limit load factors must correspond to the conditions determined as follows:

(i) Positive (up) and negative (down) gusts of 50 f.p.s. at $V_C$ must be considered at altitudes between sea level and 20,000 feet. The gust velocity may be reduced linearly from 50 f.p.s. at 20,000 feet to 25 f.p.s. at 50,000 feet.

(ii) Positive and negative gusts of 25 f.p.s. at $V_D$ must be considered at altitudes between sea level and 20,000 feet. The gust velocity may be reduced linearly from 25 f.p.s. at 20,000 feet to 12.5 f.p.s. at 50,000 feet.

(iii) In addition, for commuter category airplanes, positive (up) and negative (down) rough air gusts of 66 f.p.s. at $V_B$ must be considered at altitudes between sea level and 20,000 feet. The gust velocity may be reduced linearly from 66 f.p.s. at 20,000 feet to 38 f.p.s. at 50,000 feet.

(2) The following assumptions must be made:

(i) The shape of the gust is—

$$U = \frac{U_{de}}{2}\left(1 - \mathrm{COS}\,\frac{2\pi s}{25C}\right)$$

Where—

$s$ =Distance penetrated into gust (ft.);

$C$ =Mean geometric chord of wing (ft.); and

$Ude$ =Derived gust velocity referred to in subparagraph (1) of this section.

(ii) Gust load factors vary linearly with speed between $V_C$ and $V_D$ .

(d) *Flight envelope.*

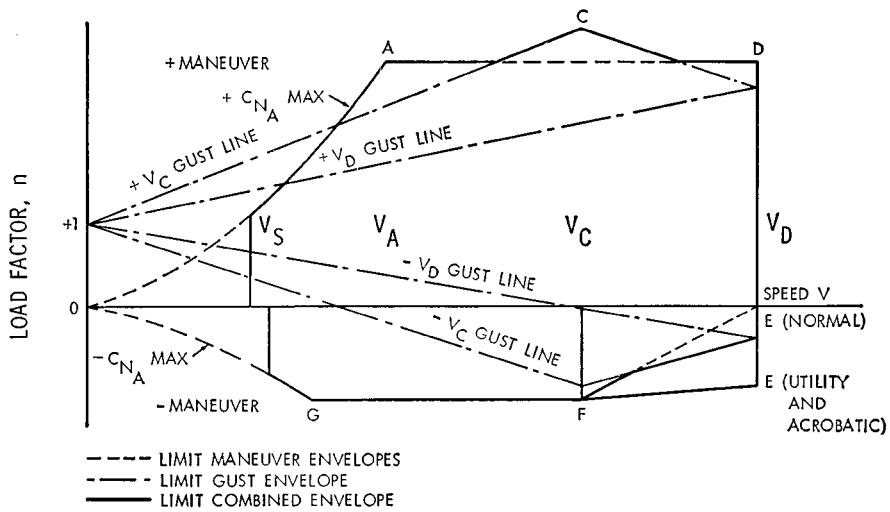


[Doc. No. 4080, 29 FR 17955, Dec. 18, 1964, as amended by Amdt. 23–7, 34 FR 13087, Aug. 13, 1969; Amdt. 23–34, 52 FR 1829, Jan. 15, 1987]

**§ 23.335 Design airspeeds.**

Except as provided in paragraph (a)(4) of this section, the selected design airspeeds are equivalent airspeeds (EAS).

(a) *Design cruising speed, $V_C$.* For $V_C$ the following apply:

(1) Where W/S′=wing loading at the design maximum takeoff weight, $V_c$ (in knots) may not be less than—

(i) 33 √(W/S) (for normal, utility, and commuter category airplanes);

(ii) 36 √(W/S) (for acrobatic category airplanes).

(2) For values of *W/S* more than 20, the multiplying factors may be decreased linearly with *W/S* to a value of 28.6 where *W/S* =100.

(3) $V_C$ need not be more than 0.9 $V_H$ at sea level.

(4) At altitudes where an $M_D$ is established, a cruising speed $M_C$ limited by compressibility may be selected.

(b) *Design dive speed $V_D$.* For $V_D$, the following apply:

(1) $V_D/M_D$ may not be less than 1.25 $V_C/M_C$; and

(2) With $V_{C\ min}$, the required minimum design cruising speed, $V_D$ (in knots) may not be less than—

(i) 1.40 $V_c$ *min* (for normal and commuter category airplanes);

(ii) 1.50 $V_{C\ min}$ (for utility category airplanes); and

(iii) 1.55 $V_{C\ min}$ (for acrobatic category airplanes).

(3) For values of *W/S* more than 20, the multiplying factors in paragraph (b)(2) of this section may be decreased linearly with *W/S* to a value of 1.35 where *W/S=100.*

(4) Compliance with paragraphs (b)(1) and (2) of this section need not be shown if $V_D/M_D$ is selected so that the minimum speed margin between $V_C/M_C$ and $V_D/M_D$ is the greater of the following:

(i) The speed increase resulting when, from the initial condition of stabilized flight at $V_C/M_C$, the airplane is assumed to be upset, flown for 20 seconds along a flight path 7.5° below the initial path, and then pulled up with a load factor of 1.5 (0.5 *g.* acceleration increment). At least 75 percent maximum continuous power for reciprocating engines, and maximum cruising power for turbines, or, if less, the power required for $V_C/M_C$ for both kinds of engines, must be assumed until the pullup is initiated, at which point power reduction and pilot-controlled drag devices may be used; and either—

(ii) Mach 0.05 for normal, utility, and acrobatic category airplanes (at altitudes where $M_D$ is established); or

(iii) Mach 0.07 for commuter category airplanes (at altitudes where $M_D$ is established) unless a rational analysis, including the effects of automatic systems, is used to determine a lower margin. If a rational analysis is used, the minimum speed margin must be enough to provide for atmospheric variations (such as horizontal gusts), and the penetration of jet streams or cold fronts), instrument errors, airframe production variations, and must not be less than Mach 0.05.

(c) *Design maneuvering speed* $V_A$. For $V_A$, the following applies:

(1) $V_A$ may not be less than $V_S\sqrt{n}$ where—

(i) $V_S$ is a computed stalling speed with flaps retracted at the design weight, normally based on the maximum airplane normal force coefficients, $C_{NA}$; and

(ii) $n$ is the limit maneuvering load factor used in design

(2) The value of $V_A$ need not exceed the value of $V_C$ used in design.

(d) *Design speed for maximum gust intensity*, $V_B$. For $V_B$, the following apply:

(1) $V_B$ may not be less than the speed determined by the intersection of the line representing the maximum positive lift, $C_{NMAX}$, and the line representing the rough air gust velocity on the gust V-n diagram, or $V_{S1}\sqrt{n_g}$, whichever is less, where:

(i) $n_g$ the positive airplane gust load factor due to gust, at speed $V_C$ (in accordance with § 23.341), and at the particular weight under consideration; and

(ii) $V_{S1}$ is the stalling speed with the flaps retracted at the particular weight under consideration.

(2) $V_B$ need not be greater than $V_C$.

[Doc. No. 4080, 29 FR 17955, Dec. 18, 1964, as amended by Amdt. 23–7, 34 FR 13088, Aug. 13, 1969; Amdt. 23–16, 40 FR 2577, Jan. 14, 1975; Amdt. 23–34, 52 FR 1829, Jan. 15, 1987; Amdt. 23–24, 52 FR 34745, Sept. 14, 1987; Amdt. 23–48, 61 FR 5143, Feb. 9, 1996]

### § 23.337 Limit maneuvering load factors.

(a) The positive limit maneuvering load factor $n$ may not be less than—

(1) 2.1+(24,000÷(W+10,000)) for normal and commuter category airplanes, where W=design maximum takeoff weight, except that n need not be more than 3.8;

(2) 4.4 for utility category airplanes; or

(3) 6.0 for acrobatic category airplanes.

(b) The negative limit maneuvering load factor may not be less than—

(1) 0.4 times the positive load factor for the normal utility and commuter categories; or

(2) 0.5 times the positive load factor for the acrobatic category.

(c) Maneuvering load factors lower than those specified in this section may be used if the airplane has design features that make it impossible to exceed these values in flight.

[Doc. No. 4080, 29 FR 17955, Dec. 18, 1964, as amended by Amdt. 23–7, 34 FR 13088, Aug. 13, 1969; Amdt. 23–34, 52 FR 1829, Jan. 15, 1987; Amdt. 23–48, 61 FR 5144, Feb. 9, 1996]

### § 23.341 Gust loads factors.

(a) Each airplane must be designed to withstand loads on each lifting surface resulting from gusts specified in § 23.333(c).

(b) The gust load for a canard or tandem wing configuration must be computed using a rational analysis, or may be computed in accordance with paragraph (c) of this section, provided that the resulting net loads are shown to be conservative with respect to the gust criteria of § 23.333(c).

(c) In the absence of a more rational analysis, the gust load factors must be computed as follows—

$$n = 1 + \frac{K_g U_{de} V a}{498\,(W/S)}$$

Where—

$K_g = 0.88\mu_g/5.3+\mu_g$=gust alleviation factor;

$\mu_g$=2(W/S)/ρ Cag=airplane mass ratio;

$U_{de}$=Derived gust velocities referred to in § 23.333(c) (f.p.s.);

ρ=Density of air (slugs/cu.ft.);

$W/S$ =Wing loading (p.s.f.) due to the applicable weight of the airplane in the particular load case.

$W/S$ =Wing loading (p.s.f.);

$C$ =Mean geometric chord (ft.);

$g$ =Acceleration due to gravity (ft./sec.$^2$)

$V$ =Airplane equivalent speed (knots); and

$a$ =Slope of the airplane normal force coefficient curve $C_{NA}$ per radian if the gust

loads are applied to the wings and horizontal tail surfaces simultaneously by a rational method. The wing lift curve slope $C_L$ per radian may be used when the gust load is applied to the wings only and the horizontal tail gust loads are treated as a separate condition.

[Amdt. 23–7, 34 FR 13088, Aug. 13, 1969, as amended by Amdt. 23–42, 56 FR 352, Jan. 3, 1991; Amdt. 23–48, 61 FR 5144, Feb. 9, 1996]

### § 23.343 Design fuel loads.

(a) The disposable load combinations must include each fuel load in the range from zero fuel to the selected maximum fuel load.

(b) If fuel is carried in the wings, the maximum allowable weight of the airplane without any fuel in the wing tank(s) must be established as ''maximum zero wing fuel weight,'' if it is less than the maximum weight.

(c) For commuter category airplanes, a structural reserve fuel condition, not exceeding fuel necessary for 45 minutes of operation at maximum continuous power, may be selected. If a structural reserve fuel condition is selected, it must be used as the minimum fuel weight condition for showing compliance with the flight load requirements prescribed in this part and—

(1) The structure must be designed to withstand a condition of zero fuel in the wing at limit loads corresponding to:

(i) Ninety percent of the maneuvering load factors defined in § 23.337, and

(ii) Gust velocities equal to 85 percent of the values prescribed in § 23.333(c).

(2) The fatigue evaluation of the structure must account for any increase in operating stresses resulting from the design condition of paragraph (c)(1) of this section.

(3) The flutter, deformation, and vibration requirements must also be met with zero fuel in the wings.

[Doc. No. 27805, 61 FR 5144, Feb. 9, 1996]

### § 23.345 High lift devices.

(a) If flaps or similar high lift devices are to be used for takeoff, approach or landing, the airplane, with the flaps fully extended at $V_F$, is assumed to be subjected to symmetrical maneuvers and gusts within the range determined by—

(1) Maneuvering, to a positive limit load factor of 2.0; and

(2) Positive and negative gust of 25 feet per second acting normal to the flight path in level flight.

(b) $V_F$ must be assumed to be not less than 1.4 $V_S$ or 1.8 $V_{SF}$, whichever is greater, where—

(1) $V_S$ is the computed stalling speed with flaps retracted at the design weight; and

(2) $V_{SF}$ is the computed stalling speed with flaps fully extended at the design weight.

(3) If an automatic flap load limiting device is used, the airplane may be designed for the critical combinations of airspeed and flap position allowed by that device.

(c) In determining external loads on the airplane as a whole, thrust, slipstream, and pitching acceleration may be assumed to be zero.

(d) The flaps, their operating mechanism, and their supporting structures, must be designed to withstand the conditions prescribed in paragraph (a) of this section. In addition, with the flaps fully extended at $V_F$, the following conditions, taken separately, must be accounted for:

(1) A head-on gust having a velocity of 25 feet per second (EAS), combined with propeller slipstream corresponding to 75 percent of maximum continuous power; and

(2) The effects of propeller slipstream corresponding to maximum takeoff power.

[Doc. No. 27805, 61 FR 5144, Feb. 9, 1996]

### § 23.347 Unsymmetrical flight conditions.

(a) The airplane is assumed to be subjected to the unsymmetrical flight conditions of §§ 23.349 and 23.351. Unbalanced aerodynamic moments about the center of gravity must be reacted in a rational or conservative manner, considering the principal masses furnishing the reacting inertia forces.

(b) Acrobatic category airplanes certified for flick maneuvers (snap roll) must be designed for additional asymmetric loads acting on the wing and the horizontal tail.

[Doc. No. 4080, 29 FR 17955, Dec. 18, 1964, as amended by Amdt. 23–48, 61 FR 5144, Feb. 9, 1996]

### §23.349 Rolling conditions.

The wing and wing bracing must be designed for the following loading conditions:

(a) Unsymmetrical wing loads appropriate to the category. Unless the following values result in unrealistic loads, the rolling accelerations may be obtained by modifying the symmetrical flight conditions in §23.333(d) as follows:

(1) For the acrobatic category, in conditions A and F, assume that 100 percent of the semispan wing airload acts on one side of the plane of symmetry and 60 percent of this load acts on the other side.

(2) For normal, utility, and commuter categories, in Condition A, assume that 100 percent of the semispan wing airload acts on one side of the airplane and 75 percent of this load acts on the other side.

(b) The loads resulting from the aileron deflections and speeds specified in §23.455, in combination with an airplane load factor of at least two thirds of the positive maneuvering load factor used for design. Unless the following values result in unrealistic loads, the effect of aileron displacement on wing torsion may be accounted for by adding the following increment to the basic airfoil moment coefficient over the aileron portion of the span in the critical condition determined in §23.333(d):

$$\Delta c_m = -0.01\delta$$

where—

$\Delta c_m$ is the moment coefficient increment; and $\delta$ is the down aileron deflection in degrees in the critical condition.

[Doc. No. 4080, 29 FR 17955, Dec. 18, 1964, as amended by Amdt. 23–7, 34 FR 13088, Aug. 13, 1969; Amdt. 23–34, 52 FR 1829, Jan. 15, 1987; Amdt. 23–48, 61 FR 5144, Feb. 9, 1996]

### §23.351 Yawing conditions.

The airplane must be designed for yawing loads on the vertical surfaces resulting from the loads specified in §§23.441 through 23.445.

[Doc. No. 4080, 29 FR 17955, Dec. 18, 1964; 30 FR 258, Jan. 9, 1965, as amended by Amdt. 23–42, 56 FR 352, Jan. 3, 1991]

### §23.361 Engine torque.

(a) Each engine mount and its supporting structure must be designed for the effects of—

(1) A limit engine torque corresponding to takeoff power and propeller speed acting simultaneously with 75 percent of the limit loads from flight condition A of §23.333(d);

(2) A limit engine torque corresponding to maximum continuous power and propeller speed acting simultaneously with the limit loads from flight condition A of §23.333(d); and

(3) For turbopropeller installations, in addition to the conditions specified in paragraphs (a)(1) and (a)(2) of this section, a limit engine torque corresponding to takeoff power and propeller speed, multiplied by a factor accounting for propeller control system malfunction, including quick feathering, acting simultaneously with lg level flight loads. In the absence of a rational analysis, a factor of 1.6 must be used.

(b) For turbine engine installations, the engine mounts and supporting structure must be designed to withstand each of the following:

(1) A limit engine torque load imposed by sudden engine stoppage due to malfunction or structural failure (such as compressor jamming).

(2) A limit engine torque load imposed by the maximum acceleration of the engine.

(c) The limit engine torque to be considered under paragraph (a) of this section must be obtained by multiplying the mean torque by a factor of—

(1) 1.25 for turbopropeller installations;

(2) 1.33 for engines with five or more cylinders; and

(3) Two, three, or four, for engines with four, three, or two cylinders, respectively.

[Amdt. 23–26, 45 FR 60171, Sept. 11, 1980, as amended by Amdt. 23–45, 58 FR 42160, Aug. 6, 1993]

### §23.363 Side load on engine mount.

(a) Each engine mount and its supporting structure must be designed for a limit load factor in a lateral direction, for the side load on the engine mount, of not less than—

(1) 1.33, or

(2) One-third of the limit load factor for flight condition A.

(b) The side load prescribed in paragraph (a) of this section may be assumed to be independent of other flight conditions.

### § 23.365 Pressurized cabin loads.

For each pressurized compartment, the following apply:

(a) The airplane structure must be strong enough to withstand the flight loads combined with pressure differential loads from zero up to the maximum relief valve setting.

(b) The external pressure distribution in flight, and any stress concentrations, must be accounted for.

(c) If landings may be made with the cabin pressurized, landing loads must be combined with pressure differential loads from zero up to the maximum allowed during landing.

(d) The airplane structure must be strong enough to withstand the pressure differential loads corresponding to the maximum relief valve setting multiplied by a factor of 1.33, omitting other loads.

(e) If a pressurized cabin has two or more compartments separated by bulkheads or a floor, the primary structure must be designed for the effects of sudden release of pressure in any compartment with external doors or windows. This condition must be investigated for the effects of failure of the largest opening in the compartment. The effects of intercompartmental venting may be considered.

### § 23.367 Unsymmetrical loads due to engine failure.

(a) Turbopropeller airplanes must be designed for the unsymmetrical loads resulting from the failure of the critical engine including the following conditions in combination with a single malfunction of the propeller drag limiting system, considering the probable pilot corrective action on the flight controls:

(1) At speeds between $V_{MC}$ and $V_{D,}$ the loads resulting from power failure because of fuel flow interruption are considered to be limit loads.

(2) At speeds between $V_{MC}$ and $V_C$, the loads resulting from the disconnection of the engine compressor from the turbine or from loss of the turbine blades are considered to be ultimate loads.

(3) The time history of the thrust decay and drag buildup occurring as a result of the prescribed engine failures must be substantiated by test or other data applicable to the particular engine-propeller combination.

(4) The timing and magnitude of the probable pilot corrective action must be conservatively estimated, considering the characteristics of the particular engine-propeller-airplane combination.

(b) Pilot corrective action may be assumed to be initiated at the time maximum yawing velocity is reached, but not earlier than 2 seconds after the engine failure. The magnitude of the corrective action may be based on the limit pilot forces specified in § 23.397 except that lower forces may be assumed where it is shown by analysis or test that these forces can control the yaw and roll resulting from the prescribed engine failure conditions.

[Amdt. 23–7, 34 FR 13089, Aug. 13, 1969]

### § 23.369 Rear lift truss.

(a) If a rear lift truss is used, it must be designed to withstand conditions of reversed airflow at a design speed of—

$V = 8.7 \sqrt{(W/S)} + 8.7$ (knots), where W/S = wing loading at design maximum takeoff weight.

(b) Either aerodynamic data for the particular wing section used, or a value of $C_L$ equalling $-0.8$ with a chordwise distribution that is triangular between a peak at the trailing edge and zero at the leading edge, must be used.

[Doc. No. 4080, 29 FR 17955, Dec. 18, 1964, as amended by Amdt. 23–7, 34 FR 13089, Aug. 13, 1969; 34 FR 17509, Oct. 30, 1969; Amdt. 23–45, 58 FR 42160, Aug. 6, 1993; Amdt. 23–48, 61 FR 5145, Feb. 9, 1996]

### § 23.371 Gyroscopic and aerodynamic loads.

(a) Each engine mount and its supporting structure must be designed for the gyroscopic, inertial, and aerodynamic loads that result, with the engine(s) and propeller(s), if applicable, at maximum continuous r.p.m., under either:

(1) The conditions prescribed in § 23.351 and § 23.423; or

(2) All possible combinations of the following—

(i) A yaw velocity of 2.5 radians per second;

(ii) A pitch velocity of 1.0 radian per second;

(iii) A normal load factor of 2.5; and

(iv) Maximum continuous thrust.

(b) For airplanes approved for aerobatic maneuvers, each engine mount and its supporting structure must meet the requirements of paragraph (a) of this section and be designed to withstand the load factors expected during combined maximum yaw and pitch velocities.

(c) For airplanes certificated in the commuter category, each engine mount and its supporting structure must meet the requirements of paragraph (a) of this section and the gust conditions specified in §23.341 of this part.

[Doc. No. 27805, 61 FR 5145, Feb. 9, 1996]

### §23.373 Speed control devices.

If speed control devices (such as spoilers and drag flaps) are incorporated for use in enroute conditions—

(a) The airplane must be designed for the symmetrical maneuvers and gusts prescribed in §§23.333, 23.337, and 23.341, and the yawing maneuvers and lateral gusts in §§23.441 and 23.443, with the device extended at speeds up to the placard device extended speed; and

(b) If the device has automatic operating or load limiting features, the airplane must be designed for the maneuver and gust conditions prescribed in paragraph (a) of this section at the speeds and corresponding device positions that the mechanism allows.

[Amdt. 23–7, 34 FR 13089, Aug. 13, 1969]

## CONTROL SURFACE AND SYSTEM LOADS

### §23.391 Control surface loads.

The control surface loads specified in §§23.397 through 23.459 are assumed to occur in the conditions described in §§23.331 through 23.351.

[Doc. No. 4080, 29 FR 17955, Dec. 18, 1964, as amended by Amdt. 23–48, 61 FR 5145, Feb. 9, 1996]

### §23.393 Loads parallel to hinge line.

(a) Control surfaces and supporting hinge brackets must be designed to withstand inertial loads acting parallel to the hinge line.

(b) In the absence of more rational data, the inertial loads may be assumed to be equal to KW, where—

(1) K = 24 for vertical surfaces;

(2) K = 12 for horizontal surfaces; and

(3) W = weight of the movable surfaces.

[Doc. No. 27805, 61 FR 5145, Feb. 9, 1996]

### §23.395 Control system loads.

(a) Each flight control system and its supporting structure must be designed for loads corresponding to at least 125 percent of the computed hinge moments of the movable control surface in the conditions prescribed in §§23.391 through 23.459. In addition, the following apply:

(1) The system limit loads need not exceed the higher of the loads that can be produced by the pilot and automatic devices operating the controls. However, autopilot forces need not be added to pilot forces. The system must be designed for the maximum effort of the pilot or autopilot, whichever is higher. In addition, if the pilot and the autopilot act in opposition, the part of the system between them may be designed for the maximum effort of the one that imposes the lesser load. Pilot forces used for design need not exceed the maximum forces prescribed in §23.397(b).

(2) The design must, in any case, provide a rugged system for service use, considering jamming, ground gusts, taxiing downwind, control inertia, and friction. Compliance with this subparagraph may be shown by designing for loads resulting from application of the minimum forces prescribed in §23.397(b).

(b) A 125 percent factor on computed hinge moments must be used to design elevator, aileron, and rudder systems. However, a factor as low as 1.0 may be used if hinge moments are based on accurate flight test data, the exact reduction depending upon the accuracy and reliability of the data.

(c) Pilot forces used for design are assumed to act at the appropriate control

grips or pads as they would in flight, and to react at the attachments of the control system to the control surface horns.

[Doc. No. 4080, 29 FR 17955, Dec. 18, 1964, as amended by Amdt. 23–7, 34 FR 13089, Aug. 13, 1969]

### § 23.397 Limit control forces and torques.

(a) In the control surface flight loading condition, the airloads on movable surfaces and the corresponding deflections need not exceed those that would result in flight from the application of any pilot force within the ranges specified in paragraph (b) of this section. In applying this criterion, the effects of control system boost and servo-mechanisms, and the effects of tabs must be considered. The automatic pilot effort must be used for design if it alone can produce higher control surface loads than the human pilot.

(b) The limit pilot forces and torques are as follows:

| Control | Maximum forces or torques for design weight, weight equal to or less than 5,000 pounds [1] | Minimum forces or torques [2] |
|---|---|---|
| Aileron: | | |
| Stick | 67 lbs | 40 lbs. |
| Wheel [3] | 50 D in.-lbs [4] | 40 D in.-lbs.[4] |
| Elevator: | | |
| Stick | 167 lbs | 100 lbs. |
| Wheel (symmetrical) | 200 lbs | 100 lbs. |
| Wheel (unsymmetrical) [5] | | 100 lbs. |
| Rudder | 200 lbs | 150 lbs. |

[1] For design weight *(W)* more than 5,000 pounds, the specified maximum values must be increased linearly with weight to 1.18 times the specified values at a design weight of 12,500 pounds and for commuter category airplanes, the specified values must be increased linearly with weight to 1.35 times the specified values at a design weight of 19,000 pounds.

[2] If the design of any individual set of control systems or surfaces makes these specified minimum forces or torques inapplicable, values corresponding to the present hinge moments obtained under § 23.415, but not less than 0.6 of the specified minimum forces or torques, may be used.

[3] The critical parts of the aileron control system must also be designed for a single tangential force with a limit value of 1.25 times the couple force determined from the above criteria.

[4] D=wheel diameter (inches).

[5] The unsymmetrical force must be applied at one of the normal handgrip points on the control wheel.

[Doc. No. 4080, 29 FR 17955, Dec. 18, 1964, as amended by Amdt. 23–7, 34 FR 13089, Aug. 13, 1969; Amdt. 23–17, 41 FR 55464, Dec. 20, 1976; Amdt. 23–34, 52 FR 1829, Jan. 15, 1987; Amdt. 23–45, 58 FR 42160, Aug. 6, 1993]

### § 23.399 Dual control system.

(a) Each dual control system must be designed to withstand the force of the pilots operating in opposition, using individual pilot forces not less than the greater of—

(1) 0.75 times those obtained under § 23.395; or

(2) The minimum forces specified in § 23.397(b).

(b) Each dual control system must be designed to withstand the force of the pilots applied together, in the same direction, using individual pilot forces not less than 0.75 times those obtained under § 23.395.

[Doc. No. 27805, 61 FR 5145, Feb. 9, 1996]

### § 23.405 Secondary control system.

Secondary controls, such as wheel brakes, spoilers, and tab controls, must be designed for the maximum forces that a pilot is likely to apply to those controls.

### § 23.407 Trim tab effects.

The effects of trim tabs on the control surface design conditions must be accounted for only where the surface loads are limited by maximum pilot effort. In these cases, the tabs are considered to be deflected in the direction that would assist the pilot. These deflections must correspond to the maximum degree of ''out of trim'' expected at the speed for the condition under consideration.

### § 23.409 Tabs.

Control surface tabs must be designed for the most severe combination of airspeed and tab deflection likely to be obtained within the flight envelope for any usable loading condition.

### § 23.415 Ground gust conditions.

(a) The control system must be investigated as follows for control surface loads due to ground gusts and taxiing downwind:

(1) If an investigation of the control system for ground gust loads is not required by paragraph (a)(2) of this section, but the applicant elects to design a part of the control system of these loads, these loads need only be carried from control surface horns through the

nearest stops or gust locks and their supporting structures.

(2) If pilot forces less than the minimums specified in § 23.397(b) are used for design, the effects of surface loads due to ground gusts and taxiing downwind must be investigated for the entire control system according to the formula:

$$H = K c S q$$

where—

H = limit hinge moment (ft.-lbs.);

c = mean chord of the control surface aft of the hinge line (ft.);

S = area of control surface aft of the hinge line (sq. ft.);

q = dynamic pressure (p.s.f.) based on a design speed not less than $14.6 \sqrt{(W/S)} + 14.6$ (f.p.s.) where W/S = wing loading at design maximum weight, except that the design speed need not exceed 88 (f.p.s.);

K = limit hinge moment factor for ground gusts derived in paragraph (b) of this section. (For ailerons and elevators, a positive value of K indicates a moment tending to depress the surface and a negative value of K indicates a moment tending to raise the surface).

(b) The limit hinge moment factor *K* for ground gusts must be derived as follows:

| Surface | *K* | Position of controls |
|---|---|---|
| (a) Aileron ..... | 0.75 | Control column locked lashed in mid-position. |
| (b) Aileron ..... | ±0.50 | Ailerons at full throw; + moment on one aileron, – moment on the other. |
| (c) Elevator ..... | ±0.75 | (c) Elevator full up (–). |
| (d) Elevator ..... | ..... | (d) Elevator full down (+). |
| (e) Rudder ..... | ±0.75 | (e) Rudder in neutral. |
| (f) Rudder ..... | ..... | (f) Rudder at full throw. |

(c) At all weights between the empty weight and the maximum weight declared for tie-down stated in the appropriate manual, any declared tie-down points and surrounding structure, control system, surfaces and associated gust locks, must be designed to withstand the limit load conditions that exist when the airplane is tied down and that result from wind speeds of up to 65 knots horizontally from any direction.

[Doc. No. 4080, 29 FR 17955, Dec. 18, 1964, as amended by Amdt. 23–7, 34 FR 13089, Aug. 13, 1969; Amdt. 23–45, 58 FR 42160, Aug. 6, 1993; Amdt. 23–48, 61 FR 5145, Feb. 9, 1996]

HORIZONTAL STABILIZING AND BALANCING SURFACES

### § 23.421 Balancing loads.

(a) A horizontal surface balancing load is a load necessary to maintain equilibrium in any specified flight condition with no pitching acceleration.

(b) Horizontal balancing surfaces must be designed for the balancing loads occurring at any point on the limit maneuvering envelope and in the flap conditions specified in § 23.345.

[Doc. No. 4080, 29 FR 17955, Dec. 18, 1964, as amended by Amdt. 23–7, 34 FR 13089, Aug. 13, 1969; Amdt. 23–42, 56 FR 352, Jan. 3, 1991]

### § 23.423 Maneuvering loads.

Each horizontal surface and its supporting structure, and the main wing of a canard or tandem wing configuration, if that surface has pitch control, must be designed for the maneuvering loads imposed by the following conditions:

(a) A sudden movement of the pitching control, at the speed $V_A$, to the maximum aft movement, and the maximum forward movement, as limited by the control stops, or pilot effort, whichever is critical.

(b) A sudden aft movement of the pitching control at speeds above $V_A$, followed by a forward movement of the pitching control resulting in the following combinations of normal and angular acceleration:

| Condition | Normal acceleration (n) | Angular acceleration (radian/sec$_2$) |
|---|---|---|
| Nose-up pitching ..... | 1.0 | $+39n_m \div V \times (n_m - 1.5)$ |
| Nose-down ptiching .... | $n_m$ | $-39n_m \div V \times (n_m - 1.5)$ |

where—

(1) $n_m$=positive limit maneuvering load factor used in the design of the airplane; and

(2) V=initial speed in knots.

The conditions in this paragraph involve loads corresponding to the loads that may occur in a ''checked maneuver'' (a maneuver in which the pitching control is suddenly displaced in one direction and then suddenly moved in the opposite direction). The deflections and timing of the ''checked maneuver'' must avoid exceeding the limit maneuvering load factor. The total horizontal

surface load for both nose-up and nose-down pitching conditions is the sum of the balancing loads at *V* and the specified value of the normal load factor *n*, plus the maneuvering load increment due to the specified value of the angular acceleration.

[Amdt. 23–42, 56 FR 353, Jan. 3, 1991; 56 FR 5455, Feb. 11, 1991]

**§ 23.425 Gust loads.**

(a) Each horizontal surface, other than a main wing, must be designed for loads resulting from—

(1) Gust velocities specified in § 23.333(c) with flaps retracted; and

(2) Positive and negative gusts of 25 f.p.s. nominal intensity at $V_F$ corresponding to the flight conditions specified in § 23.345(a)(2).

(b) [Reserved]

(c) When determining the total load on the horizontal surfaces for the conditions specified in paragraph (a) of this section, the initial balancing loads for steady unaccelerated flight at the pertinent design speeds $V_F$, $V_C$, and $V_D$ must first be determined. The incremental load resulting from the gusts must be added to the initial balancing load to obtain the total load.

(d) In the absence of a more rational analysis, the incremental load due to the gust must be computed as follows only on airplane configurations with aft-mounted, horizontal surfaces, unless its use elsewhere is shown to be conservative:

$$\Delta L_{ht} = \frac{K_g U_{de} V a_{ht} S_{ht}}{498}\left(1 - \frac{d\varepsilon}{d\alpha}\right)$$

where—

$\Delta L_{ht}$=Incremental horizontal tailload (lbs.);
$K_g$=Gust alleviation factor defined in § 23.341;
$U_{de}$=Derived gust velocity (f.p.s.);
V=Airplane equivalent speed (knots);
$a_{ht}$=Slope of aft horizontal lift curve (per radian)
$S_{ht}$=Area of aft horizontal lift surface ($ft^2$); and

$$\left(1 - \frac{d\varepsilon}{d\alpha}\right) = \text{Downwash factor}$$

[Doc. No. 4080, 29 FR 17955, Dec. 18, 1964, as amended by Amdt. 23–7, 34 FR 13089 Aug. 13, 1969; Amdt. 23–42, 56 FR 353, Jan. 3, 1991]

**§ 23.427 Unsymmetrical loads.**

(a) Horizontal surfaces other than main wing and their supporting structure must be designed for unsymmetrical loads arising from yawing and slipstream effects, in combination with the loads prescribed for the flight conditions set forth in §§ 23.421 through 23.425.

(b) In the absence of more rational data for airplanes that are conventional in regard to location of engines, wings, horizontal surfaces other than main wing, and fuselage shape:

(1) 100 percent of the maximum loading from the symmetrical flight conditions may be assumed on the surface on one side of the plane of symmetry; and

(2) The following percentage of that loading must be applied to the opposite side:

Percent=100 − 10 (n − 1), where n is the specified positive maneuvering load factor, but this value may not be more than 80 percent.

(c) For airplanes that are not conventional (such as airplanes with horizontal surfaces other than main wing having appreciable dihedral or supported by the vertical tail surfaces) the surfaces and supporting structures must be designed for combined vertical and horizontal surface loads resulting from each prescribed flight condition taken separately.

[Amdt. 23–14, 38 FR 31820, Nov. 19, 1973, as amended by Amdt. 23–42, 56 FR 353, Jan. 3, 1991]

VERTICAL SURFACES

**§ 23.441 Maneuvering loads.**

(a) At speeds up to $V_A$, the vertical surfaces must be designed to withstand the following conditions. In computing the loads, the yawing velocity may be assumed to be zero:

(1) With the airplane in unaccelerated flight at zero yaw, it is assumed that the rudder control is suddenly displaced to the maximum deflection, as limited by the control stops or by limit pilot forces.

(2) With the rudder deflected as specified in paragraph (a)(1) of this section, it is assumed that the airplane yaws to the overswing sideslip angle. In lieu of a rational analysis, an overswing angle

equal to 1.5 times the static sideslip angle of paragraph (a)(3) of this section may be assumed.

(3) A yaw angle of 15 degrees with the rudder control maintained in the neutral position (except as limited by pilot strength).

(b) For commuter category airplanes, the loads imposed by the following additional maneuver must be substantiated at speeds from $V_A$ to $V_D/M_D$. When computing the tail loads—

(1) The airplane must be yawed to the largest attainable steady state sideslip angle, with the rudder at maximum deflection caused by any one of the following:

(i) Control surface stops;

(ii) Maximum available booster effort;

(iii) Maximum pilot rudder force as shown below:

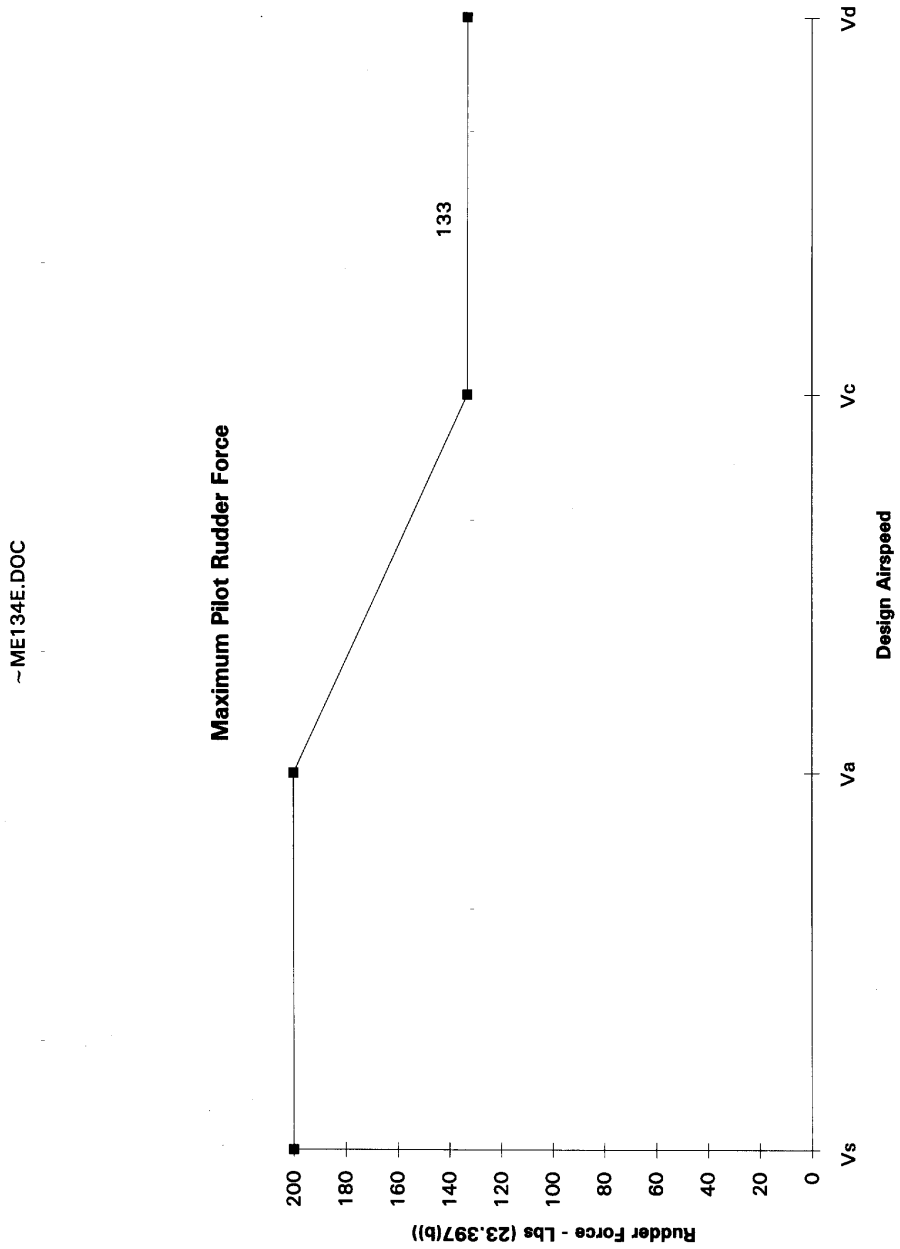


(2) The rudder must be suddenly displaced from the maximum deflection to the neutral position.

(c) The yaw angles specified in paragraph (a)(3) of this section may be reduced if the yaw angle chosen for a particular speed cannot be exceeded in—

(1) Steady slip conditions;

(2) Uncoordinated rolls from steep banks; or

(3) Sudden failure of the critical engine with delayed corrective action.

[Doc. No. 4080, 29 FR 17955, Dec. 18, 1964, as amended by Amdt. 23–7, 34 FR 13090, Aug. 13, 1969; Amdt. 23–14, 38 FR 31821, Nov. 19, 1973; Amdt. 23–28, 47 FR 13315, Mar. 29, 1982; Amdt. 23–42, 56 FR 353, Jan. 3, 1991; Amdt. 23–48, 61 FR 5145, Feb. 9, 1996]

### §23.443 Gust loads.

(a) Vertical surfaces must be designed to withstand, in unaccelerated flight at speed $V_C$, lateral gusts of the values prescribed for $V_C$ in §23.333(c).

(b) In addition, for commuter category airplanes, the airplane is assumed to encounter derived gusts normal to the plane of symmetry while in unaccelerated flight at $V_B$, $V_C$, $V_D$, and $V_F$. The derived gusts and airplane speeds corresponding to these conditions, as determined by §§23.341 and 23.345, must be investigated. The shape of the gust must be as specified in §23.333(c)(2)(i).

(c) In the absence of a more rational analysis, the gust load must be computed as follows:

$$L_{vt} = \frac{K_{gt}\, U_{de}\, V\, a_{vt}\, S_{vt}}{498}$$

Where—

$L_{vt}$=Vertical surface loads (lbs.);

$$k_{gt} = \frac{0.88\,\mu_{gt}}{5.3+\mu_{gt}} = \text{gust alleviation factor;}$$

$$\mu_{gt} = \frac{2W}{\rho c_t g\, a_{vt} S_{vt}} \frac{K^2}{l_{vt}} = \text{lateral mass ratio;}$$

$U_{de}$=Derived gust velocity (f.p.s.);

ρ=Air density (slugs/cu.ft.);

W=the applicable weight of the airplane in the particular load case (lbs.);

$S_{vt}$=Area of vertical surface (ft.$^2$);

$\check{c}_{\leq t}$=Mean geometric chord of vertical surface (ft.);

$a_{vt}$=Lift curve slope of vertical surface (per radian);

K=Radius of gyration in yaw (ft.);

$l_{vt}$=Distance from airplane c.g. to lift center of vertical surface (ft.);

g=Acceleration due to gravity (ft./sec.$^2$); and

V=Equivalent airspeed (knots).

[Amdt. 23–7, 34 FR 13090, Aug. 13, 1969, as amended by Amdt. 23–34, 52 FR 1830, Jan. 15, 1987; 52 FR 7262, Mar. 9, 1987; Amdt. 23–24, 52 FR 34745, Sept. 14, 1987; Amdt. 23–42, 56 FR 353, Jan. 3, 1991; Amdt. 23–48, 61 FR 5147, Feb. 9, 1996]

### §23.445 Outboard fins or winglets.

(a) If outboard fins or winglets are included on the horizontal surfaces or wings, the horizontal surfaces or wings must be designed for their maximum load in combination with loads induced by the fins or winglets and moments or forces exerted on the horizontal surfaces or wings by the fins or winglets.

(b) If outboard fins or winglets extend above and below the horizontal surface, the critical vertical surface loading (the load per unit area as determined under §§23.441 and 23.443) must be applied to—

(1) The part of the vertical surfaces above the horizontal surface with 80 percent of that loading applied to the part below the horizontal surface; and

(2) The part of the vertical surfaces below the horizontal surface with 80 percent of that loading applied to the part above the horizontal surface.

(c) The end plate effects of outboard fins or winglets must be taken into account in applying the yawing conditions of §§23.441 and 23.443 to the vertical surfaces in paragraph (b) of this section.

(d) When rational methods are used for computing loads, the maneuvering loads of §23.441 on the vertical surfaces and the one-g horizontal surface load, including induced loads on the horizontal surface and moments or forces exerted on the horizontal surfaces by the vertical surfaces, must be applied simultaneously for the structural loading condition.

[Doc. No. 4080, 29 FR 17955, Dec. 18, 1964, as amended by Amdt. 23–14, 38 FR 31821, Nov. 19, 1973; Amdt. 23–42, 56 FR 353, Jan. 3, 1991]

## AILERONS AND SPECIAL DEVICES

### §23.455 Ailerons.

(a) The ailerons must be designed for the loads to which they are subjected—

(1) In the neutral position during symmetrical flight conditions; and

(2) By the following deflections (except as limited by pilot effort), during unsymmetrical flight conditions:

(i) Sudden maximum displacement of the aileron control at $V_A$. Suitable allowance may be made for control system deflections.

(ii) Sufficient deflection at $V_C$, where $V_C$ is more than $V_A$, to produce a rate of roll not less than obtained in paragraph (a)(2)(i) of this section.

(iii) Sufficient deflection at $V_D$ to produce a rate of roll not less than one-third of that obtained in paragraph (a)(2)(i) of this section.

(b) [Reserved]

[Doc. No. 4080, 29 FR 17955, Dec. 18, 1964, as amended by Amdt. 23–7, 34 FR 13090, Aug. 13, 1969; Amdt. 23–42, 56 FR 353, Jan. 3, 1991]

### § 23.459 Special devices.

The loading for special devices using aerodynamic surfaces (such as slots and spoilers) must be determined from test data.

## GROUND LOADS

### § 23.471 General.

The limit ground loads specified in this subpart are considered to be external loads and inertia forces that act upon an airplane structure. In each specified ground load condition, the external reactions must be placed in equilibrium with the linear and angular inertia forces in a rational or conservative manner.

### § 23.473 Ground load conditions and assumptions.

(a) The ground load requirements of this subpart must be complied with at the design maximum weight except that §§ 23.479, 23.481, and 23.483 may be complied with at a design landing weight (the highest weight for landing conditions at the maximum descent velocity) allowed under paragraphs (b) and (c) of this section.

(b) The design landing weight may be as low as—

(1) 95 percent of the maximum weight if the minimum fuel capacity is enough for at least one-half hour of operation at maximum continuous power plus a capacity equal to a fuel weight which is the difference between the design maximum weight and the design landing weight; or

(2) The design maximum weight less the weight of 25 percent of the total fuel capacity.

(c) The design landing weight of a multiengine airplane may be less than that allowed under paragraph (b) of this section if—

(1) The airplane meets the one-engine-inoperative climb requirements of § 23.67(b)(1) or (c); and

(2) Compliance is shown with the fuel jettisoning system requirements of § 23.1001.

(d) The selected limit vertical inertia load factor at the center of gravity of the airplane for the ground load conditions prescribed in this subpart may not be less than that which would be obtained when landing with a descent velocity ($V$), in feet per second, equal to 4.4 $(W/S)^{1/4}$, except that this velocity need not be more than 10 feet per second and may not be less than seven feet per second.

(e) Wing lift not exceeding two-thirds of the weight of the airplane may be assumed to exist throughout the landing impact and to act through the center of gravity. The ground reaction load factor may be equal to the inertia load factor minus the ratio of the above assumed wing lift to the airplane weight.

(f) If energy absorption tests are made to determine the limit load factor corresponding to the required limit descent velocities, these tests must be made under § 23.723(a).

(g) No inertia load factor used for design purposes may be less than 2.67, nor may the limit ground reaction load factor be less than 2.0 at design maximum weight, unless these lower values will not be exceeded in taxiing at speeds up to takeoff speed over terrain as rough as that expected in service.

[Doc. No. 4080, 29 FR 17955, Dec. 18, 1964, as amended by Amdt. 23–7, 34 FR 13090, Aug. 13, 1969; Amdt. 23–28, 47 FR 13315, Mar. 29, 1982; Amdt. 23–45, 58 FR 42160, Aug. 6, 1993; Amdt. 23–48, 61 FR 5147, Feb. 9, 1996]

### § 23.477 Landing gear arrangement.

Sections 23.479 through 23.483, or the conditions in appendix C, apply to airplanes with conventional arrangements

of main and nose gear, or main and tail gear.

### §23.479 Level landing conditions.

(a) For a level landing, the airplane is assumed to be in the following attitudes:

(1) For airplanes with tail wheels, a normal level flight attitude.

(2) For airplanes with nose wheels, attitudes in which—

(i) The nose and main wheels contact the ground simultaneously; and

(ii) The main wheels contact the ground and the nose wheel is just clear of the ground.

The attitude used in paragraph (a)(2)(i) of this section may be used in the analysis required under paragraph (a)(2)(ii) of this section.

(b) When investigating landing conditions, the drag components simulating the forces required to accelerate the tires and wheels up to the landing speed (spin-up) must be properly combined with the corresponding instantaneous vertical ground reactions, and the forward-acting horizontal loads resulting from rapid reduction of the spin-up drag loads (spring-back) must be combined with vertical ground reactions at the instant of the peak forward load, assuming wing lift and a tire-sliding coefficient of friction of 0.8. However, the drag loads may not be less than 25 percent of the maximum vertical ground reactions (neglecting wing lift).

(c) In the absence of specific tests or a more rational analysis for determining the wheel spin-up and spring-back loads for landing conditions, the method set forth in appendix D of this part must be used. If appendix D of this part is used, the drag components used for design must not be less than those given by appendix C of this part.

(d) For airplanes with tip tanks or large overhung masses (such as turbopropeller or jet engines) supported by the wing, the tip tanks and the structure supporting the tanks or overhung masses must be designed for the effects of dynamic responses under the level landing conditions of either paragraph (a)(1) or (a)(2)(ii) of this section. In evaluating the effects of dynamic response, an airplane lift equal to the weight of the airplane may be assumed.

[Doc. No. 4080, 29 FR 17955, Dec. 18, 1964, as amended by Amdt. 23–17, 41 FR 55464, Dec. 20, 1976; Amdt. 23–45, 58 FR 42160, Aug. 6, 1993]

### §23.481 Tail down landing conditions.

(a) For a tail down landing, the airplane is assumed to be in the following attitudes:

(1) For airplanes with tail wheels, an attitude in which the main and tail wheels contact the ground simultaneously.

(2) For airplanes with nose wheels, a stalling attitude, or the maximum angle allowing ground clearance by each part of the airplane, whichever is less.

(b) For airplanes with either tail or nose wheels, ground reactions are assumed to be vertical, with the wheels up to speed before the maximum vertical load is attained.

### §23.483 One-wheel landing conditions.

For the one-wheel landing condition, the airplane is assumed to be in the level attitude and to contact the ground on one side of the main landing gear. In this attitude, the ground reactions must be the same as those obtained on that side under §23.479.

### §23.485 Side load conditions.

(a) For the side load condition, the airplane is assumed to be in a level attitude with only the main wheels contacting the ground and with the shock absorbers and tires in their static positions.

(b) The limit vertical load factor must be 1.33, with the vertical ground reaction divided equally between the main wheels.

(c) The limit side inertia factor must be 0.83, with the side ground reaction divided between the main wheels so that—

(1) 0.5 ($W$) is acting inboard on one side; and

(2) 0.33 ($W$) is acting outboard on the other side.

(d) The side loads prescribed in paragraph (c) of this section are assumed to be applied at the ground contact point

and the drag loads may be assumed to be zero.

[Doc. No. 4080, 29 FR 17955, Dec. 18, 1964, as amended by Amdt. 23–45, 58 FR 42160, Aug. 6, 1993]

### § 23.493 Braked roll conditions.

Under braked roll conditions, with the shock absorbers and tires in their static positions, the following apply:

(a) The limit vertical load factor must be 1.33.

(b) The attitudes and ground contacts must be those described in § 23.479 for level landings.

(c) A drag reaction equal to the vertical reaction at the wheel multiplied by a coefficient of friction of 0.8 must be applied at the ground contact point of each wheel with brakes, except that the drag reaction need not exceed the maximum value based on limiting brake torque.

### § 23.497 Supplementary conditions for tail wheels.

In determining the ground loads on the tail wheel and affected supporting structures, the following apply:

(a) For the obstruction load, the limit ground reaction obtained in the tail down landing condition is assumed to act up and aft through the axle at 45 degrees. The shock absorber and tire may be assumed to be in their static positions.

(b) For the side load, a limit vertical ground reaction equal to the static load on the tail wheel, in combination with a side component of equal magnitude, is assumed. In addition—

(1) If a swivel is used, the tail wheel is assumed to be swiveled 90 degrees to the airplane longitudinal axis with the resultant ground load passing through the axle;

(2) If a lock, steering device, or shimmy damper is used, the tail wheel is also assumed to be in the trailing position with the side load acting at the ground contact point; and

(3) The shock absorber and tire are assumed to be in their static positions.

(c) If a tail wheel, bumper, or an energy absorption device is provided to show compliance with § 23.925(b), the following apply:

(1) Suitable design loads must be established for the tail wheel, bumper, or energy absorption device; and

(2) The supporting structure of the tail wheel, bumper, or energy absorption device must be designed to withstand the loads established in paragraph (c)(1) of this section.

[Doc. No. 4080, 29 FR 17955, Dec. 18, 1964, as amended by Amdt. 23–48, 61 FR 5147, Feb. 9, 1996]

### § 23.499 Supplementary conditions for nose wheels.

In determining the ground loads on nose wheels and affected supporting structures, and assuming that the shock absorbers and tires are in their static positions, the following conditions must be met:

(a) For aft loads, the limit force components at the axle must be—

(1) A vertical component of 2.25 times the static load on the wheel; and

(2) A drag component of 0.8 times the vertical load.

(b) For forward loads, the limit force components at the axle must be—

(1) A vertical component of 2.25 times the static load on the wheel; and

(2) A forward component of 0.4 times the vertical load.

(c) For side loads, the limit force components at ground contact must be—

(1) A vertical component of 2.25 times the static load on the wheel; and

(2) A side component of 0.7 times the vertical load.

(d) For airplanes with a steerable nose wheel that is controlled by hydraulic or other power, at design takeoff weight with the nose wheel in any steerable position, the application of 1.33 times the full steering torque combined with a vertical reaction equal to 1.33 times the maximum static reaction on the nose gear must be assumed. However, if a torque limiting device is installed, the steering torque can be reduced to the maximum value allowed by that device.

(e) For airplanes with a steerable nose wheel that has a direct mechanical connection to the rudder pedals, the mechanism must be designed to withstand the steering torque for the

maximum pilot forces specified in §23.397(b).

[Doc. No. 4080, 29 FR 17955, Dec. 18, 1964, as amended by Amdt. 23–48, 61 FR 5147, Feb. 9, 1996]

### §23.505 Supplementary conditions for skiplanes.

In determining ground loads for skiplanes, and assuming that the airplane is resting on the ground with one main ski frozen at rest and the other skis free to slide, a limit side force equal to 0.036 times the design maximum weight must be applied near the tail assembly, with a factor of safety of 1.

[Amdt. 23–7, 34 FR 13090, Aug. 13, 1969]

### §23.507 Jacking loads.

(a) The airplane must be designed for the loads developed when the aircraft is supported on jacks at the design maximum weight assuming the following load factors for landing gear jacking points at a three-point attitude and for primary flight structure jacking points in the level attitude:

(1) Vertical-load factor of 1.35 times the static reactions.

(2) Fore, aft, and lateral load factors of 0.4 times the vertical static reactions.

(b) The horizontal loads at the jack points must be reacted by inertia forces so as to result in no change in the direction of the resultant loads at the jack points.

(c) The horizontal loads must be considered in all combinations with the vertical load.

[Amdt. 23–14, 38 FR 31821, Nov. 19, 1973]

### §23.509 Towing loads.

The towing loads of this section must be applied to the design of tow fittings and their immediate attaching structure.

(a) The towing loads specified in paragraph (d) of this section must be considered separately. These loads must be applied at the towing fittings and must act parallel to the ground. In addition:

(1) A vertical load factor equal to 1.0 must be considered acting at the center of gravity; and

(2) The shock struts and tires must be in there static positions.

(b) For towing points not on the landing gear but near the plane of symmetry of the airplane, the drag and side tow load components specified for the auxiliary gear apply. For towing points located outboard of the main gear, the drag and side tow load components specified for the main gear apply. Where the specified angle of swivel cannot be reached, the maximum obtainable angle must be used.

(c) The towing loads specified in paragraph (d) of this section must be reacted as follows:

(1) The side component of the towing load at the main gear must be reacted by a side force at the static ground line of the wheel to which the load is applied.

(2) The towing loads at the auxiliary gear and the drag components of the towing loads at the main gear must be reacted as follows:

(i) A reaction with a maximum value equal to the vertical reaction must be applied at the axle of the wheel to which the load is applied. Enough airplane inertia to achieve equilibrium must be applied.

(ii) The loads must be reacted by airplane inertia.

(d) The prescribed towing loads are as follows, where W is the design maximum weight:

| Tow point | Position | Load | | |
|---|---|---|---|---|
| | | Magnitude | No. | Direction |
| Main gear | | 0.225W | 1 | Forward, parallel to drag axis. |
| | | | 2 | Forward, at 30° to drag axis. |
| | | | 3 | Aft, parallel to drag axis. |
| | | | 4 | Aft, at 30° to drag axis. |
| Auxiliary gear | Swiveled forward | 0.3W | 5 | Forward. |
| | | | 6 | Aft. |
| | Swiveled aft | 0.3W | 7 | Forward. |
| | | | 8 | Aft. |

| Tow point | Position | Load | | |
|---|---|---|---|---|
| | | Magnitude | No. | Direction |
| | Swiveled 45° from forward | 0.15W | 9 | Forward, in plane of wheel. |
| | | | 10 | Aft, in plane of wheel. |
| | Swiveled 45° from aft | 0.15W | 11 | Forward, in plane of wheel. |
| | | | 12 | Aft, in plane of wheel. |

[Amdt. 23–14, 38 FR 31821, Nov. 19, 1973]

### § 23.511 Ground load; unsymmetrical loads on multiple-wheel units.

(a) *Pivoting loads.* The airplane is assumed to pivot about on side of the main gear with—

(1) The brakes on the pivoting unit locked; and

(2) Loads corresponding to a limit vertical load factor of 1, and coefficient of friction of 0.8 applied to the main gear and its supporting structure.

(b) *Unequal tire loads.* The loads established under §§ 23.471 through 23.483 must be applied in turn, in a 60/40 percent distribution, to the dual wheels and tires in each dual wheel landing gear unit.

(c) *Deflated tire loads.* For the deflated tire condition—

(1) 60 percent of the loads established under §§ 23.471 through 23.483 must be applied in turn to each wheel in a landing gear unit; and

(2) 60 percent of the limit drag and side loads, and 100 percent of the limit vertical load established under §§ 23.485 and 23.493 or lesser vertical load obtained under paragraph (c)(1) of this section, must be applied in turn to each wheel in the dual wheel landing gear unit.

[Amdt. 23–7, 34 FR 13090, Aug. 13, 1969]

## WATER LOADS

### § 23.521 Water load conditions.

(a) The structure of seaplanes and amphibians must be designed for water loads developed during takeoff and landing with the seaplane in any attitude likely to occur in normal operation at appropriate forward and sinking velocities under the most severe sea conditions likely to be encountered.

(b) Unless the applicant makes a rational analysis of the water loads, §§ 23.523 through 23.537 apply.

[Doc. No. 4080, 29 FR 17955, Dec. 18, 1964, as amended by Amdt. 23–45, 58 FR 42160, Aug. 6, 1993; Amdt. 23–48, 61 FR 5147, Feb. 9, 1996]

### § 23.523 Design weights and center of gravity positions.

(a) *Design weights.* The water load requirements must be met at each operating weight up to the design landing weight except that, for the takeoff condition prescribed in § 23.531, the design water takeoff weight (the maximum weight for water taxi and takeoff run) must be used.

(b) *Center of gravity positions.* The critical centers of gravity within the limits for which certification is requested must be considered to reach maximum design loads for each part of the seaplane structure.

[Doc. No. 26269, 58 FR 42160, Aug. 6, 1993]

### § 23.525 Application of loads.

(a) Unless otherwise prescribed, the seaplane as a whole is assumed to be subjected to the loads corresponding to the load factors specified in § 23.527.

(b) In applying the loads resulting from the load factors prescribed in § 23.527, the loads may be distributed over the hull or main float bottom (in order to avoid excessive local shear loads and bending moments at the location of water load application) using pressures not less than those prescribed in § 23.533(c).

(c) For twin float seaplanes, each float must be treated as an equivalent hull on a fictitious seaplane with a weight equal to one-half the weight of the twin float seaplane.

(d) Except in the takeoff condition of § 23.531, the aerodynamic lift on the

seaplane during the impact is assumed to be ⅔ of the weight of the seaplane.

[Doc. No. 26269, 58 FR 42161, Aug. 6, 1993; 58 FR 51970, Oct. 5, 1993]

**§23.527 Hull and main float load factors.**

(a) Water reaction load factors $n_w$ must be computed in the following manner:

(1) For the step landing case

$$n_w = \frac{C_1 V_{SO}^2}{\left(\mathrm{Tan}^{\frac{2}{3}}\beta\right) W^{\frac{1}{3}}}$$

(2) For the bow and stern landing cases

$$n_w = \frac{C_1 V_{SO}^2}{\left(\mathrm{Tan}^{\frac{2}{3}}\beta\right) W^{\frac{1}{3}}} \times \frac{K_1}{\left(1+r_x^2\right)^{\frac{2}{3}}}$$

(b) The following values are used:

(1) $n_w$=water reaction load factor (that is, the water reaction divided by seaplane weight).

(2) $C_1$=empirical seaplane operations factor equal to 0.012 (except that this factor may not be less than that necessary to obtain the minimum value of step load factor of 2.33).

(3) $V_{SO}$=seaplane stalling speed in knots with flaps extended in the appropriate landing position and with no slipstream effect.

(4) β=Angle of dead rise at the longitudinal station at which the load factor is being determined in accordance with figure 1 of appendix I of this part.

(5) W=seaplane landing weight in pounds.

(6) $K_1$=empirical hull station weighing factor, in accordance with figure 2 of appendix I of this part.

(7) $r_x$=ratio of distance, measured parallel to hull reference axis, from the center of gravity of the seaplane to the hull longitudinal station at which the load factor is being computed to the radius of gyration in pitch of the seaplane, the hull reference axis being a straight line, in the plane of symmetry, tangential to the keel at the main step.

(c) For a twin float seaplane, because of the effect of flexibility of the attachment of the floats to the seaplane, the factor $K_1$ may be reduced at the bow and stern to 0.8 of the value shown in figure 2 of appendix I of this part. This reduction applies only to the design of the carrythrough and seaplane structure.

[Doc. No. 26269, 58 FR 42161, Aug. 6, 1993; 58 FR 51970, Oct. 5, 1993]

**§23.529 Hull and main float landing conditions.**

(a) *Symmetrical step, bow, and stern landing.* For symmetrical step, bow, and stern landings, the limit water reaction load factors are those computed under §23.527. In addition—

(1) For symmetrical step landings, the resultant water load must be applied at the keel, through the center of gravity, and must be directed perpendicularly to the keel line;

(2) For symmetrical bow landings, the resultant water load must be applied at the keel, one-fifth of the longitudinal distance from the bow to the step, and must be directed perpendicularly to the keel line; and

(3) For symmetrical stern landings, the resultant water load must be applied at the keel, at a point 85 percent of the longitudinal distance from the step to the stern post, and must be directed perpendicularly to the keel line.

(b) *Unsymmetrical landing for hull and single float seaplanes.* Unsymmetrical step, bow, and stern landing conditions must be investigated. In addition—

(1) The loading for each condition consists of an upward component and a side component equal, respectively, to 0.75 and 0.25 tan β times the resultant load in the corresponding symmetrical landing condition; and

(2) The point of application and direction of the upward component of the load is the same as that in the symmetrical condition, and the point of application of the side component is at the same longitudinal station as the upward component but is directed inward perpendicularly to the plane of symmetry at a point midway between the keel and chine lines.

(c) *Unsymmetrical landing; twin float seaplanes.* The unsymmetrical loading consists of an upward load at the step of each float of 0.75 and a side load of 0.25 tan β at one float times the step landing load reached under §23.527. The

side load is directed inboard, perpendicularly to the plane of symmetry midway between the keel and chine lines of the float, at the same longitudinal station as the upward load.

[Doc. No. 26269, 58 FR 42161, Aug. 6, 1993]

**§ 23.531 Hull and main float takeoff condition.**

For the wing and its attachment to the hull or main float—

(a) The aerodynamic wing lift is assumed to be zero; and

(b) A downward inertia load, corresponding to a load factor computed from the following formula, must be applied:

$$n = \frac{C_{TO} V_{S1}^{2}}{\left(\mathrm{Tan}^{\frac{2}{3}} \beta\right) W^{\frac{1}{3}}}$$

Where—

n=inertia load factor;

$C_{TO}$=empirical seaplane operations factor equal to 0.004;

$V_{S1}$=seaplane stalling speed (knots) at the design takeoff weight with the flaps extended in the appropriate takeoff position;

β=angle of dead rise at the main step (degrees); and

W=design water takeoff weight in pounds.

[Doc. No. 26269, 58 FR 42161, Aug. 6, 1993]

**§ 23.533 Hull and main float bottom pressures.**

(a) *General.* The hull and main float structure, including frames and bulkheads, stringers, and bottom plating, must be designed under this section.

(b) *Local pressures.* For the design of the bottom plating and stringers and their attachments to the supporting structure, the following pressure distributions must be applied:

(1) For an unflared bottom, the pressure at the chine is 0.75 times the pressure at the keel, and the pressures between the keel and chine vary linearly, in accordance with figure 3 of appendix I of this part. The pressure at the keel (p.s.i.) is computed as follows:

$$P_K = \frac{C_2 K_2 V_{S1}^{2}}{\mathrm{Tan}\,\beta_k}$$

where—

$P_k$=pressure (p.s.i.) at the keel;

$C_2$=0.00213;

$K_2$=hull station weighing factor, in accordance with figure 2 of appendix I of this part;

$V_{S1}$=seaplane stalling speed (knots) at the design water takeoff weight with flaps extended in the appropriate takeoff position; and

$\beta_K$=angle of dead rise at keel, in accordance with figure 1 of appendix I of this part.

(2) For a flared bottom, the pressure at the beginning of the flare is the same as that for an unflared bottom, and the pressure between the chine and the beginning of the flare varies linearly, in accordance with figure 3 of appendix I of this part. The pressure distribution is the same as that prescribed in paragraph (b)(1) of this section for an unflared bottom except that the pressure at the chine is computed as follows:

$$P_{ch} = \frac{C_3 K_2 V_{S1}^{2}}{\mathrm{Tan}\,\beta}$$

where—

$P_{ch}$=pressure (p.s.i.) at the chine;

$C_3$=0.0016;

$K_2$=hull station weighing factor, in accordance with figure 2 of appendix I of this part;

$V_{S1}$=seaplane stalling speed (knots) at the design water takeoff weight with flaps extended in the appropriate takeoff position; and

β=angle of dead rise at appropriate station.

The area over which these pressures are applied must simulate pressures occurring during high localized impacts on the hull or float, but need not extend over an area that would induce critical stresses in the frames or in the overall structure.

(c) *Distributed pressures.* For the design of the frames, keel, and chine structure, the following pressure distributions apply:

(1) Symmetrical pressures are computed as follows:

$$P = \frac{C_4 K_2 V_{SO}^2}{\tan \beta}$$

where—

P=pressure (p.s.i.);

$C_4$=0.078 $C_1$ (with $C_1$ computed under § 23.527);

$K_2$=hull station weighing factor, determined in accordance with figure 2 of appendix I of this part;

$V_{S0}$=seaplane stalling speed (knots) with landing flaps extended in the appropriate position and with no slipstream effect; and

β=angle of dead rise at appropriate station.

(2) The unsymmetrical pressure distribution consists of the pressures prescribed in paragraph (c)(1) of this section on one side of the hull or main float centerline and one-half of that pressure on the other side of the hull or main float centerline, in accordance with figure 3 of appendix I of this part.

(3) These pressures are uniform and must be applied simultaneously over the entire hull or main float bottom. The loads obtained must be carried into the sidewall structure of the hull proper, but need not be transmitted in a fore and aft direction as shear and bending loads.

[Doc. No. 26269, 58 FR 42161, Aug. 6, 1993; 58 FR 51970, Oct. 5, 1993]

### § 23.535 Auxiliary float loads.

(a) *General.* Auxiliary floats and their attachments and supporting structures must be designed for the conditions prescribed in this section. In the cases specified in paragraphs (b) through (e) of this section, the prescribed water loads may be distributed over the float bottom to avoid excessive local loads, using bottom pressures not less than those prescribed in paragraph (g) of this section.

(b) *Step loading.* The resultant water load must be applied in the plane of symmetry of the float at a point three-fourths of the distance from the bow to the step and must be perpendicular to the keel. The resultant limit load is computed as follows, except that the value of L need not exceed three times the weight of the displaced water when the float is completely submerged:

$$L = \frac{C_5 V_{SO}^2 W^{\frac{2}{3}}}{\tan^{\frac{2}{3}} \beta_S \left(1 + r_y^2\right)^{\frac{2}{3}}}$$

where—

L=limit load (lbs.);

$C_5$=0.0053;

$V_{S0}$=seaplane stalling speed (knots) with landing flaps extended in the appropriate position and with no slipstream effect;

W=seaplane design landing weight in pounds;

$\beta_S$=angle of dead rise at a station ¾ of the distance from the bow to the step, but need not be less than 15 degrees; and

$r_y$=ratio of the lateral distance between the center of gravity and the plane of symmetry of the float to the radius of gyration in roll.

(c) *Bow loading.* The resultant limit load must be applied in the plane of symmetry of the float at a point one-fourth of the distance from the bow to the step and must be perpendicular to the tangent to the keel line at that point. The magnitude of the resultant load is that specified in paragraph (b) of this section.

(d) *Unsymmetrical step loading.* The resultant water load consists of a component equal to 0.75 times the load specified in paragraph (a) of this section and a side component equal to 0.025 tan β times the load specified in paragraph (b) of this section. The side load must be applied perpendicularly to the plane of symmetry of the float at a point midway between the keel and the chine.

(e) *Unsymmetrical bow loading.* The resultant water load consists of a component equal to 0.75 times the load specified in paragraph (b) of this section and a side component equal to 0.25 tan β times the load specified in paragraph (c) of this section. The side load must be applied perpendicularly to the plane of symmetry at a point midway between the keel and the chine.

(f) *Immersed float condition.* The resultant load must be applied at the centroid of the cross section of the

float at a point one-third of the distance from the bow to the step. The limit load components are as follows:

$$\text{vertical} = PgV$$

$$\text{aft} = \frac{C_X P V^{\frac{2}{3}} (KV_{SO})^2}{2}$$

$$\text{side} = \frac{C_Y P V^{\frac{2}{3}} (KV_{SO})^2}{2}$$

where—

P=mass density of water (slugs/ft.$^3$)

V=volume of float (ft.$^3$);

$C_X$=coefficient of drag force, equal to 0.133;

$C_y$=coefficient of side force, equal to 0.106;

K=0.8, except that lower values may be used if it is shown that the floats are incapable of submerging at a speed of 0.8 $V_{so}$ in normal operations;

$V_{so}$=seaplane stalling speed (knots) with landing flaps extended in the appropriate position and with no slipstream effect; and

g=acceleration due to gravity (ft/sec$^2$).

(g) *Float bottom pressures.* The float bottom pressures must be established under § 23.533, except that the value of $K_2$ in the formulae may be taken as 1.0. The angle of dead rise to be used in determining the float bottom pressures is set forth in paragraph (b) of this section.

[Doc. No. 26269, 58 FR 42162, Aug. 6, 1993; 58 FR 51970, Oct. 5, 1993]

### § 23.537 Seawing loads.

Seawing design loads must be based on applicable test data.

[Doc. No. 26269, 58 FR 42163, Aug. 6, 1993]

## EMERGENCY LANDING CONDITIONS

### § 23.561 General.

(a) The airplane, although it may be damaged in emergency landing conditions, must be designed as prescribed in this section to protect each occupant under those conditions.

(b) The structure must be designed to give each occupant every reasonable chance of escaping serious injury when—

(1) Proper use is made of the seats, safety belts, and shoulder harnesses provided for in the design;

(2) The occupant experiences the static inertia loads corresponding to the following ultimate load factors—

(i) Upward, 3.0g for normal, utility, and commuter category airplanes, or 4.5g for acrobatic category airplanes;

(ii) Forward, 9.0g;

(iii) Sideward, 1.5g; and

(iv) Downward, 6.0g when certification to the emergency exit provisions of § 23.807(d)(4) is requested; and

(3) The items of mass within the cabin, that could injure an occupant, experience the static inertia loads corresponding to the following ultimate load factors—

(i) Upward, 3.0g;

(ii) Forward, 18.0g; and

(iii) Sideward, 4.5g.

(c) Each airplane with retractable landing gear must be designed to protect each occupant in a landing—

(1) With the wheels retracted;

(2) With moderate descent velocity; and

(3) Assuming, in the absence of a more rational analysis—

(i) A downward ultimate inertia force of 3 *g;* and

(ii) A coefficient of friction of 0.5 at the ground.

(d) If it is not established that a turnover is unlikely during an emergency landing, the structure must be designed to protect the occupants in a complete turnover as follows:

(1) The likelihood of a turnover may be shown by an analysis assuming the following conditions—

(i) The most adverse combination of weight and center of gravity position;

(ii) Longitudinal load factor of 9.0g;

(iii) Vertical load factor of 1.0g; and

(iv) For airplanes with tricycle landing gear, the nose wheel strut failed with the nose contacting the ground.

(i) Maximum weight;

(ii) Most forward center of gravity position;

(iii) Longitudinal load factor of 9.0g;

(iv) Vertical load factor of 1.0g; and

(v) For airplanes with tricycle landing gear, the nose wheel strut failed with the nose contacting the ground.

(2) For determining the loads to be applied to the inverted airplane after a

turnover, an upward ultimate inertia load factor of 3.0g and a coefficient of friction with the ground of 0.5 must be used.

(e) Except as provided in §23.787(c), the supporting structure must be designed to restrain, under loads up to those specified in paragraph (b)(3) of this section, each item of mass that could injure an occupant if it came loose in a minor crash landing.

[Doc. No. 4080, 29 FR 17955, Dec. 18, 1964, as amended by Amdt. 23–7, 34 FR 13090, Aug. 13, 1969; Amdt. 23–24, 52 FR 34745, Sept. 14, 1987; Amdt. 23–36, 53 FR 30812, Aug. 15, 1988; Amdt. 23–46, 59 FR 25772, May 17, 1994; Amdt. 23–48, 61 FR 5147, Feb. 9, 1996]

### §23.562 Emergency landing dynamic conditions.

(a) Each seat/restraint system for use in a normal, utility, or acrobatic category airplane must be designed to protect each occupant during an emergency landing when—

(1) Proper use is made of seats, safety belts, and shoulder harnesses provided for in the design; and

(2) The occupant is exposed to the loads resulting from the conditions prescribed in this section.

(b) Except for those seat/restraint systems that are required to meet paragraph (d) of this section, each seat/restraint system for crew or passenger occupancy in a normal, utility, or acrobatic category airplane, must successfully complete dynamic tests or be demonstrated by rational analysis supported by dynamic tests, in accordance with each of the following conditions. These tests must be conducted with an occupant simulated by an anthropomorphic test dummy (ATD) defined by 49 CFR Part 572, Subpart B, or an FAA-approved equivalent, with a nominal weight of 170 pounds and seated in the normal upright position.

(1) For the first test, the change in velocity may not be less than 31 feet per second. The seat/restraint system must be oriented in its nominal position with respect to the airplane and with the horizontal plane of the airplane pitched up 60 degrees, with no yaw, relative to the impact vector. For seat/restraint systems to be installed in the first row of the airplane, peak deceleration must occur in not more than 0.05 seconds after impact and must reach a minimum of 19g. For all other seat/restraint systems, peak deceleration must occur in not more than 0.06 seconds after impact and must reach a minimum of 15g.

(2) For the second test, the change in velocity may not be less than 42 feet per second. The seat/restraint system must be oriented in its nominal position with respect to the airplane and with the vertical plane of the airplane yawed 10 degrees, with no pitch, relative to the impact vector in a direction that results in the greatest load on the shoulder harness. For seat/restraint systems to be installed in the first row of the airplane, peak deceleration must occur in not more than 0.05 seconds after impact and must reach a minimum of 26g. For all other seat/restraint systems, peak deceleration must occur in not more than 0.06 seconds after impact and must reach a minimum of 21g.

(3) To account for floor warpage, the floor rails or attachment devices used to attach the seat/restraint system to the airframe structure must be preloaded to misalign with respect to each other by at least 10 degrees vertically (i.e., pitch out of parallel) and one of the rails or attachment devices must be preloaded to misalign by 10 degrees in roll prior to conducting the test defined by paragraph (b)(2) of this section.

(c) Compliance with the following requirements must be shown during the dynamic tests conducted in accordance with paragraph (b) of this section:

(1) The seat/restraint system must restrain the ATD although seat/restraint system components may experience deformation, elongation, displacement, or crushing intended as part of the design.

(2) The attachment between the seat/restraint system and the test fixture must remain intact, although the seat structure may have deformed.

(3) Each shoulder harness strap must remain on the ATD's shoulder during the impact.

(4) The safety belt must remain on the ATD's pelvis during the impact.

(5) The results of the dynamic tests must show that the occupant is protected from serious head injury.

(i) When contact with adjacent seats, structure, or other items in the cabin can occur, protection must be provided so that the head impact does not exceed a head injury criteria (HIC) of 1,000.

(ii) The value of HIC is defined as—

$$HIC = \left\{ (t_2 - t_1) \left[ \frac{1}{(t_2 - t_1)} \int_{t_1}^{t_2} a(t)dt \right]^{2.5} \right\}_{Max}$$

Where: $t_1$ is the initial integration time, expressed in seconds, $t_2$ is the final integration time, expressed in seconds, $(t_2 - t_1)$ is the time duration of the major head impact, expressed in seconds, and a(t) is the resultant deceleration at the center of gravity of the head form expressed as a multiple of g (units of gravity).

(iii) Compliance with the HIC limit must be demonstrated by measuring the head impact during dynamic testing as prescribed in paragraphs (b)(1) and (b)(2) of this section or by a separate showing of compliance with the head injury criteria using test or analysis procedures.

(6) Loads in individual shoulder harness straps may not exceed 1,750 pounds. If dual straps are used for retaining the upper torso, the total strap loads may not exceed 2,000 pounds.

(7) The compression load measured between the pelvis and the lumbar spine of the ATD may not exceed 1,500 pounds.

(d) For all single-engine airplanes with a $V_{SO}$ of more than 61 knots at maximum weight, and those multiengine airplanes of 6,000 pounds or less maximum weight with a $V_{SO}$ of more than 61 knots at maximum weight that do not comply with § 23.67(a)(1);

(1) The ultimate load factors of § 23.561(b) must be increased by multiplying the load factors by the square of the ratio of the increased stall speed to 61 knots. The increased ultimate load factors need not exceed the values reached at a $V_{S0}$ of 79 knots. The upward ultimate load factor for acrobatic category airplanes need not exceed 5.0g.

(2) The seat/restraint system test required by paragraph (b)(1) of this section must be conducted in accordance with the following criteria:

(i) The change in velocity may not be less than 31 feet per second.

(ii)(A) The peak deceleration ($g_p$) of 19g and 15g must be increased and multiplied by the square of the ratio of the increased stall speed to 61 knots:

$g_p$=19.0 $(V_{S0}/61)^2$ or $g_p$=15.0 $(V_{S0}/61)^2$

(B) The peak deceleration need not exceed the value reached at a $V_{S0}$ of 79 knots.

(iii) The peak deceleration must occur in not more than time ($t_r$), which must be computed as follows:

$$t_r = \frac{31}{32.2(g_p)} = \frac{.96}{g_p}$$

where—

$g_p$=The peak deceleration calculated in accordance with paragraph (d)(2)(ii) of this section

$t_r$=The rise time (in seconds) to the peak deceleration.

(e) An alternate approach that achieves an equivalent, or greater, level of occupant protection to that required by this section may be used if substantiated on a rational basis.

[Amdt. 23–36, 53 FR 30812, Aug. 15, 1988, as amended by Amdt. 23–44, 58 FR 38639, July 19, 1993; Amdt. 23–50, 61 FR 5192, Feb. 9, 1996]

FATIGUE EVALUATION

**§ 23.571 Metallic pressurized cabin structures.**

For normal, utility, and acrobatic category airplanes, the strength, detail design, and fabrication of the metallic structure of the pressure cabin must be evaluated under one of the following:

(a) A fatigue strength investigation in which the structure is shown by tests, or by analysis supported by test evidence, to be able to withstand the repeated loads of variable magnitude expected in service; or

(b) A fail safe strength investigation, in which it is shown by analysis, tests, or both that catastrophic failure of the structure is not probable after fatigue failure, or obvious partial failure, of a principal structural element, and that the remaining structures are able to withstand a static ultimate load factor of 75 percent of the limit load factor at $V_C$, considering the combined effects of normal operating pressures, expected

external aerodynamic pressures, and flight loads. These loads must be multiplied by a factor of 1.15 unless the dynamic effects of failure under static load are otherwise considered.

(c) The damage tolerance evaluation of §23.573(b).

[Doc. No. 4080, 29 FR 17955, Dec. 18, 1964, as amended by Amdt. 23–14, 38 FR 31821, Nov. 19, 1973; Amdt. 23–45, 58 FR 42163, Aug. 6, 1993; Amdt. 23–48, 61 FR 5147, Feb. 9, 1996]

### §23.572 Metallic wing, empennage, and associated structures.

(a) For normal, utility, and acrobatic category airplanes, the strength, detail design, and fabrication of those parts of the airframe structure whose failure would be catastrophic must be evaluated under one of the following unless it is shown that the structure, operating stress level, materials and expected uses are comparable, from a fatigue standpoint, to a similar design that has had extensive satisfactory service experience:

(1) A fatigue strength investigation in which the structure is shown by tests, or by analysis supported by test evidence, to be able to withstand the repeated loads of variable magnitude expected in service; or

(2) A fail-safe strength investigation in which it is shown by analysis, tests, or both, that catastrophic failure of the structure is not probable after fatigue failure, or obvious partial failure, of a principal structural element, and that the remaining structure is able to withstand a static ultimate load factor of 75 percent of the critical limit load factor at $V_c$. These loads must be multiplied by a factor of 1.15 unless the dynamic effects of failure under static load are otherwise considered.

(3) The damage tolerance evaluation of §23.573(b).

(b) Each evaluation required by this section must—

(1) Include typical loading spectra (e.g. taxi, ground-air-ground cycles, maneuver, gust);

(2) Account for any significant effects due to the mutual influence of aerodynamic surfaces; and

(3) Consider any significant effects from propeller slipstream loading, and buffet from vortex impingements.

[Amdt. 23–7, 34 FR 13090, Aug. 13, 1969, as amended by Amdt. 23–14, 38 FR 31821, Nov. 19, 1973; Amdt. 23–34, 52 FR 1830, Jan. 15, 1987; Amdt. 23–38, 54 FR 39511, Sept. 26, 1989; Amdt. 23–45, 58 FR 42163, Aug. 6, 1993; Amdt. 23–48, 61 FR 5147, Feb. 9, 1996]

### §23.573 Damage tolerance and fatigue evaluation of structure.

(a) *Composite airframe structure.* Composite airframe structure must be evaluated under this paragraph instead of §§23.571 and 23.572. The applicant must evaluate the composite airframe structure, the failure of which would result in catastrophic loss of the airplane, in each wing (including canards, tandem wings, and winglets), empennage, their carrythrough and attaching structure, moveable control surfaces and their attaching structure fuselage, and pressure cabin using the damage-tolerance criteria prescribed in paragraphs (a)(1) through (a)(4) of this section unless shown to be impractical. If the applicant establishes that damage-tolerance criteria is impractical for a particular structure, the structure must be evaluated in accordance with paragraphs (a)(1) and (a)(6) of this section. Where bonded joints are used, the structure must also be evaluated in accordance with paragraph (a)(5) of this section. The effects of material variability and environmental conditions on the strength and durability properties of the composite materials must be accounted for in the evaluations required by this section.

(1) It must be demonstrated by tests, or by analysis supported by tests, that the structure is capable of carrying ultimate load with damage up to the threshold of detectability considering the inspection procedures employed.

(2) The growth rate or no-growth of damage that may occur from fatigue, corrosion, manufacturing flaws or impact damage, under repeated loads expected in service, must be established by tests or analysis supported by tests.

(3) The structure must be shown by residual strength tests, or analysis supported by residual strength tests, to be able to withstand critical limit flight loads, considered as ultimate loads,

with the extent of detectable damage consistent with the results of the damage tolerance evaluations. For pressurized cabins, the following loads must be withstood:

(i) Critical limit flight loads with the combined effects of normal operating pressure and expected external aerodynamic pressures.

(ii) The expected external aerodynamic pressures in 1g flight combined with a cabin differential pressure equal to 1.1 times the normal operating differential pressure without any other load.

(4) The damage growth, between initial detectability and the value selected for residual strength demonstrations, factored to obtain inspection intervals, must allow development of an inspection program suitable for application by operation and maintenance personnel.

(5) For any bonded joint, the failure of which would result in catastrophic loss of the airplane, the limit load capacity must be substantiated by one of the following methods—

(i) The maximum disbonds of each bonded joint consistent with the capability to withstand the loads in paragraph (a)(3) of this section must be determined by analysis, tests, or both. Disbonds of each bonded joint greater than this must be prevented by design features; or

(ii) Proof testing must be conducted on each production article that will apply the critical limit design load to each critical bonded joint; or

(iii) Repeatable and reliable non-destructive inspection techniques must be established that ensure the strength of each joint.

(6) Structural components for which the damage tolerance method is shown to be impractical must be shown by component fatigue tests, or analysis supported by tests, to be able to withstand the repeated loads of variable magnitude expected in service. Sufficient component, subcomponent, element, or coupon tests must be done to establish the fatigue scatter factor and the environmental effects. Damage up to the threshold of detectability and ultimate load residual strength capability must be considered in the demonstration.

(b) *Metallic airframe structure.* If the applicant elects to use § 23.571(a)(3) or § 23.572(a)(3), then the damage tolerance evaluation must include a determination of the probable locations and modes of damage due to fatigue, corrosion, or accidental damage. The determination must be by analysis supported by test evidence and, if available, service experience. Damage at multiple sites due to fatigue must be included where the design is such that this type of damage can be expected to occur. The evaluation must incorporate repeated load and static analyses supported by test evidence. The extent of damage for residual strength evaluation at any time within the operational life of the airplane must be consistent with the initial detectability and subsequent growth under repeated loads. The residual strength evaluation must show that the remaining structure is able to withstand critical limit flight loads, considered as ultimate, with the extent of detectable damage consistent with the results of the damage tolerance evaluations. For pressurized cabins, the following load must be withstood:

(1) The normal operating differential pressure combined with the expected external aerodynamic pressures applied simultaneously with the flight loading conditions specified in this part, and

(2) The expected external aerodynamic pressures in 1g flight combined with a cabin differential pressure equal to 1.1 times the normal operating differential pressure without any other load.

[Doc. No. 26269, 58 FR 42163, Aug. 6, 1993; 58 FR 51970, Oct. 5, 1993, as amended by Amdt. 23–48, 61 FR 5147, Feb. 9, 1996]

### § 23.574 Metallic damage tolerance and fatigue evaluation of commuter category airplanes.

For commuter category airplanes—

(a) *Metallic damage tolerance.* An evaluation of the strength, detail design, and fabrication must show that catastrophic failure due to fatigue, corrosion, defects, or damage will be avoided throughout the operational life of the airplane. This evaluation must be conducted in accordance with the provisions of § 23.573, except as specified in paragraph (b) of this section, for each

part of the structure that could contribute to a catastrophic failure.

(b) *Fatigue (safe-life) evaluation.* Compliance with the damage tolerance requirements of paragraph (a) of this section is not required if the applicant establishes that the application of those requirements is impractical for a particular structure. This structure must be shown, by analysis supported by test evidence, to be able to withstand the repeated loads of variable magnitude expected during its service life without detectable cracks. Appropriate safe-life scatter factors must be applied.

[Doc. No. 27805, 61 FR 5148, Feb. 9, 1996]

### §23.575 Inspections and other procedures.

Each inspection or other procedure, based on an evaluation required by §§23.571, 23.572, 23.573 or 23.574, must be established to prevent catastrophic failure and must be included in the Limitations Section of the Instructions for Continued Airworthiness required by §23.1529.

[Doc. No. 27805, 61 FR 5148, Feb. 9, 1996]

## Subpart D—Design and Construction

### §23.601 General.

The suitability of each questionable design detail and part having an important bearing on safety in operations, must be established by tests.

### §23.603 Materials and workmanship.

(a) The suitability and durability of materials used for parts, the failure of which could adversely affect safety, must—

(1) Be established by experience or tests;

(2) Meet approved specifications that ensure their having the strength and other properties assumed in the design data; and

(3) Take into account the effects of environmental conditions, such as temperature and humidity, expected in service.

(b) Workmanship must be of a high standard.

[Doc. No. 4080, 29 FR 17955, Dec. 18, 1964, as amended by Amdt. 23–17, 41 FR 55464, Dec. 20, 1976; Amdt. 23–23, 43 FR 50592, Oct. 10, 1978]

### §23.605 Fabrication methods.

(a) The methods of fabrication used must produce consistently sound structures. If a fabrication process (such as gluing, spot welding, or heat-treating) requires close control to reach this objective, the process must be performed under an approved process specification.

(b) Each new aircraft fabrication method must be substantiated by a test program.

[Doc. No. 4080, 29 FR 17955, Dec. 18, 1964; 30 FR 258, Jan. 9, 1965, as amended by Amdt. 23–23, 43 FR 50592, Oct. 10, 1978]

### §23.607 Fasteners.

(a) Each removable fastener must incorporate two retaining devices if the loss of such fastener would preclude continued safe flight and landing.

(b) Fasteners and their locking devices must not be adversely affected by the environmental conditions associated with the particular installation.

(c) No self-locking nut may be used on any bolt subject to rotation in operation unless a non-friction locking device is used in addition to the self-locking device.

[Doc. No. 27805, 61 FR 5148, Feb. 9, 1996]

### §23.609 Protection of structure.

Each part of the structure must—

(a) Be suitably protected against deterioration or loss of strength in service due to any cause, including—

(1) Weathering;

(2) Corrosion; and

(3) Abrasion; and

(b) Have adequate provisions for ventilation and drainage.

### §23.611 Accessibility provisions.

For each part that requires maintenance, inspection, or other servicing, appropriate means must be incorporated into the aircraft design to allow such servicing to be accomplished.

[Doc. No. 27805, 61 FR 5148, Feb. 9, 1996]

### §23.613 Material strength properties and design values.

(a) Material strength properties must be based on enough tests of material

meeting specifications to establish design values on a statistical basis.

(b) Design values must be chosen to minimize the probability of structural failure due to material variability. Except as provided in paragraph (e) of this section, compliance with this paragraph must be shown by selecting design values that ensure material strength with the following probability:

(1) Where applied loads are eventually distributed through a single member within an assembly, the failure of which would result in loss of structural integrity of the component; 99 percent probability with 95 percent confidence.

(2) For redundant structure, in which the failure of individual elements would result in applied loads being safely distributed to other load carrying members; 90 percent probability with 95 percent confidence.

(c) The effects of temperature on allowable stresses used for design in an essential component or structure must be considered where thermal effects are significant under normal operating conditions.

(d) The design of the structure must minimize the probability of catastrophic fatigue failure, particularly at points of stress concentration.

(e) Design values greater than the guaranteed minimums required by this section may be used where only guaranteed minimum values are normally allowed if a ''premium selection'' of the material is made in which a specimen of each individual item is tested before use to determine that the actual strength properties of that particular item will equal or exceed those used in design.

[Doc. No. 4080, 29 FR 17955, Dec. 18, 1964; 30 FR 258, Jan. 9, 1965, as amended by Amdt. 23–23, 43 FR 50592, Oct. 30, 1978; Amdt. 23–45, 58 FR 42163, Aug. 6, 1993]

### § 23.619 Special factors.

The factor of safety prescribed in § 23.303 must be multiplied by the highest pertinent special factors of safety prescribed in §§ 23.621 through 23.625 for each part of the structure whose strength is—

(a) Uncertain;

(b) Likely to deteriorate in service before normal replacement; or

(c) Subject to appreciable variability because of uncertainties in manufacturing processes or inspection methods.

[Amdt. 23–7, 34 FR 13091, Aug. 13, 1969]

### § 23.621 Casting factors.

(a) *General.* The factors, tests, and inspections specified in paragraphs (b) through (d) of this section must be applied in addition to those necessary to establish foundry quality control. The inspections must meet approved specifications. Paragraphs (c) and (d) of this section apply to any structural castings except castings that are pressure tested as parts of hydraulic or other fluid systems and do not support structural loads.

(b) *Bearing stresses and surfaces.* The casting factors specified in paragraphs (c) and (d) of this section—

(1) Need not exceed 1.25 with respect to bearing stresses regardless of the method of inspection used; and

(2) Need not be used with respect to the bearing surfaces of a part whose bearing factor is larger than the applicable casting factor.

(c) *Critical castings.* For each casting whose failure would preclude continued safe flight and landing of the airplane or result in serious injury to occupants, the following apply:

(1) Each critical casting must either—

(i) Have a casting factor of not less than 1.25 and receive 100 percent inspection by visual, radiographic, and either magnetic particle, penetrant or other approved equivalent non-destructive inspection method; or

(ii) Have a casting factor of not less than 2.0 and receive 100 percent visual inspection and 100 percent approved non-destructive inspection. When an approved quality control procedure is established and an acceptable statistical analysis supports reduction, non-destructive inspection may be reduced from 100 percent, and applied on a sampling basis.

(2) For each critical casting with a casting factor less than 1.50, three sample castings must be static tested and shown to meet—

(i) The strength requirements of § 23.305 at an ultimate load corresponding to a casting factor of 1.25; and

(ii) The deformation requirements of §23.305 at a load of 1.15 times the limit load.

(3) Examples of these castings are structural attachment fittings, parts of flight control systems, control surface hinges and balance weight attachments, seat, berth, safety belt, and fuel and oil tank supports and attachments, and cabin pressure valves.

(d) *Non-critical castings.* For each casting other than those specified in paragraph (c) or (e) of this section, the following apply:

(1) Except as provided in paragraphs (d)(2) and (3) of this section, the casting factors and corresponding inspections must meet the following table:

| Casting factor | Inspection |
|---|---|
| 2.0 or more | 100 percent visual. |
| Less than 2.0 but more than 1.5. | 100 percent visual, and magnetic particle or penetrant or equivalent nondestructive inspection methods. |
| 1.25 through 1.50 | 100 percent visual, magnetic particle or penetrant, and radiographic, or approved equivalent nondestructive inspection methods. |

(2) The percentage of castings inspected by nonvisual methods may be reduced below that specified in subparagraph (d)(1) of this section when an approved quality control procedure is established.

(3) For castings procured to a specification that guarantees the mechanical properties of the material in the casting and provides for demonstration of these properties by test of coupons cut from the castings on a sampling basis—

(i) A casting factor of 1.0 may be used; and

(ii) The castings must be inspected as provided in paragraph (d)(1) of this section for casting factors of ''1.25 through 1.50'' and tested under paragraph (c)(2) of this section.

(e) *Non-structural castings.* Castings used for non-structural purposes do not require evaluation, testing or close inspection.

[Doc. No. 4080, 29 FR 17955, Dec. 18, 1964, as amended by Amdt. 23–45, 58 FR 42164, Aug. 6, 1993]

### §23.623 Bearing factors.

(a) Each part that has clearance (free fit), and that is subject to pounding or vibration, must have a bearing factor large enough to provide for the effects of normal relative motion.

(b) For control surface hinges and control system joints, compliance with the factors prescribed in §§23.657 and 23.693, respectively, meets paragraph (a) of this section.

[Amdt. 23–7, 34 FR 13091, Aug. 13, 1969]

### §23.625 Fitting factors.

For each fitting (a part or terminal used to join one structural member to another), the following apply:

(a) For each fitting whose strength is not proven by limit and ultimate load tests in which actual stress conditions are simulated in the fitting and surrounding structures, a fitting factor of at least 1.15 must be applied to each part of—

(1) The fitting;

(2) The means of attachment; and

(3) The bearing on the joined members.

(b) No fitting factor need be used for joint designs based on comprehensive test data (such as continuous joints in metal plating, welded joints, and scarf joints in wood).

(c) For each integral fitting, the part must be treated as a fitting up to the point at which the section properties become typical of the member.

(d) For each seat, berth, safety belt, and harness, its attachment to the structure must be shown, by analysis, tests, or both, to be able to withstand the inertia forces prescribed in §23.561 multiplied by a fitting factor of 1.33.

[Doc. No. 4080, 29 FR 17955, Dec. 18, 1964, as amended by Amdt. 23–7, 34 FR 13091, Aug. 13, 1969]

### §23.627 Fatigue strength.

The structure must be designed, as far as practicable, to avoid points of stress concentration where variable stresses above the fatigue limit are likely to occur in normal service.

### §23.629 Flutter.

(a) It must be shown by the methods of paragraph (b) and either paragraph

(c) or (d) of this section, that the airplane is free from flutter, control reversal, and divergence for any condition of operation within the limit V-n envelope and at all speeds up to the speed specified for the selected method. In addition—

(1) Adequate tolerances must be established for quantities which affect flutter, including speed, damping, mass balance, and control system stiffness; and

(2) The natural frequencies of main structural components must be determined by vibration tests or other approved methods.

(b) Flight flutter tests must be made to show that the airplane is free from flutter, control reversal and divergence and to show that—

(1) Proper and adequate attempts to induce flutter have been made within the speed range up to $V_D$;

(2) The vibratory response of the structure during the test indicates freedom from flutter;

(3) A proper margin of damping exists at $V_D$; and

(4) There is no large and rapid reduction in damping as $V_D$ is approached.

(c) Any rational analysis used to predict freedom from flutter, control reversal and divergence must cover all speeds up to 1.2 $V_D$.

(d) Compliance with the rigidity and mass balance criteria (pages 4–12), in Airframe and Equipment Engineering Report No. 45 (as corrected) ''Simplified Flutter Prevention Criteria'' (published by the Federal Aviation Administration) may be accomplished to show that the airplane is free from flutter, control reversal, or divergence if—

(1) $V_D/M_D$ for the airplane is less than 260 knots (EAS) and less than Mach 0.5,

(2) The wing and aileron flutter prevention criteria, as represented by the wing torsional stiffness and aileron balance criteria, are limited in use to airplanes without large mass concentrations (such as engines, floats, or fuel tanks in outer wing panels) along the wing span, and

(3) The airplane—

(i) Does not have a T-tail or other unconventional tail configurations;

(ii) Does not have unusual mass distributions or other unconventional design features that affect the applicability of the criteria, and

(iii) Has fixed-fin and fixed-stabilizer surfaces.

(e) For turbopropeller-powered airplanes, the dynamic evaluation must include—

(1) Whirl mode degree of freedom which takes into account the stability of the plane of rotation of the propeller and significant elastic, inertial, and aerodynamic forces, and

(2) Propeller, engine, engine mount, and airplane structure stiffness and damping variations appropriate to the particular configuration.

(f) Freedom from flutter, control reversal, and divergence up to $V_D/M_D$ must be shown as follows:

(1) For airplanes that meet the criteria of paragraphs (d)(1) through (d)(3) of this section, after the failure, malfunction, or disconnection of any single element in any tab control system.

(2) For airplanes other than those described in paragraph (f)(1) of this section, after the failure, malfunction, or disconnection of any single element in the primary flight control system, any tab control system, or any flutter damper.

(g) For airplanes showing compliance with the fail-safe criteria of §§ 23.571 and 23.572, the airplane must be shown by analysis to be free from flutter up to $V_D/M_D$ after fatigue failure, or obvious partial failure, of a principal structural element.

(h) For airplanes showing compliance with the damage tolerance criteria of § 23.573, the airplane must be shown by analysis to be free from flutter up to $V_D/M_D$ with the extent of damage for which residual strength is demonstrated.

(i) For modifications to the type design that could affect the flutter characteristics, compliance with paragraph (a) of this section must be shown, except that analysis based on previously approved data may be used alone to show freedom from flutter, control reversal and divergence, for all speeds up

to the speed specified for the selected method.

[Amdt. 23–23, 43 FR 50592, Oct. 30, 1978, as amended by Amdt. 23–31, 49 FR 46867, Nov. 28, 1984; Amdt. 23–45, 58 FR 42164, Aug. 6, 1993; 58 FR 51970, Oct. 5, 1993; Amdt. 23–48, 61 FR 5148, Feb. 9, 1996]

WINGS

**§23.641 Proof of strength.**

The strength of stressed-skin wings must be proven by load tests or by combined structural analysis and load tests.

CONTROL SURFACES

**§23.651 Proof of strength.**

(a) Limit load tests of control surfaces are required. These tests must include the horn or fitting to which the control system is attached.

(b) In structural analyses, rigging loads due to wire bracing must be accounted for in a rational or conservative manner.

**§23.655 Installation.**

(a) Movable surfaces must be installed so that there is no interference between any surfaces, their bracing, or adjacent fixed structure, when one surface is held in its most critical clearance positions and the others are operated through their full movement.

(b) If an adjustable stabilizer is used, it must have stops that will limit its range of travel to that allowing safe flight and landing.

[Doc. No. 4080, 29 FR 17955, Dec. 18, 1964, as amended by Amdt. 23–45, 58 FR 42164, Aug. 6, 1993]

**§23.657 Hinges.**

(a) Control surface hinges, except ball and roller bearing hinges, must have a factor of safety of not less than 6.67 with respect to the ultimate bearing strength of the softest material used as a bearing.

(b) For ball or roller bearing hinges, the approved rating of the bearing may not be exceeded.

[Doc. No. 4080, 29 FR 17955, Dec. 18, 1964, as amended by Amdt. 23–48, 61 FR 5148, Feb. 9, 1996]

**§23.659 Mass balance.**

The supporting structure and the attachment of concentrated mass balance weights used on control surfaces must be designed for—

(a) 24 *g* normal to the plane of the control surface;

(b) 12 *g* fore and aft; and

(c) 12 *g* parallel to the hinge line.

CONTROL SYSTEMS

**§23.671 General.**

(a) Each control must operate easily, smoothly, and positively enough to allow proper performance of its functions.

(b) Controls must be arranged and identified to provide for convenience in operation and to prevent the possibility of confusion and subsequent inadvertent operation.

**§23.672 Stability augmentation and automatic and power-operated systems.**

If the functioning of stability augmentation or other automatic or power-operated systems is necessary to show compliance with the flight characteristics requirements of this part, such systems must comply with §23.671 and the following:

(a) A warning, which is clearly distinguishable to the pilot under expected flight conditions without requiring the pilot's attention, must be provided for any failure in the stability augmentation system or in any other automatic or power-operated system that could result in an unsafe condition if the pilot was not aware of the failure. Warning systems must not activate the control system.

(b) The design of the stability augmentation system or of any other automatic or power-operated system must permit initial counteraction of failures without requiring exceptional pilot skill or strength, by either the deactivation of the system or a failed portion thereof, or by overriding the failure by movement of the flight controls in the normal sense.

(c) It must be shown that, after any single failure of the stability augmentation system or any other automatic or power-operated system—

(1) The airplane is safely controllable when the failure or malfunction occurs at any speed or altitude within the approved operating limitations that is critical for the type of failure being considered;

(2) The controllability and maneuverability requirements of this part are met within a practical operational flight envelope (for example, speed, altitude, normal acceleration, and airplane configuration) that is described in the Airplane Flight Manual (AFM); and

(3) The trim, stability, and stall characteristics are not impaired below a level needed to permit continued safe flight and landing.

[Doc. No. 26269, 58 FR 42164, Aug. 6, 1993]

### § 23.673 Primary flight controls.

Primary flight controls are those used by the pilot for the immediate control of pitch, roll, and yaw.

[Doc. No. 4080, 29 FR 17955, Dec. 18, 1964, as amended by Amdt. 23–48, 61 FR 5148, Feb. 9, 1996]

### § 23.675 Stops.

(a) Each control system must have stops that positively limit the range of motion of each movable aerodynamic surface controlled by the system.

(b) Each stop must be located so that wear, slackness, or takeup adjustments will not adversely affect the control characteristics of the airplane because of a change in the range of surface travel.

(c) Each stop must be able to withstand any loads corresponding to the design conditions for the control system.

[Amdt. 23–17, 41 FR 55464, Dec. 20, 1976]

### § 23.677 Trim systems.

(a) Proper precautions must be taken to prevent inadvertent, improper, or abrupt trim tab operation. There must be means near the trim control to indicate to the pilot the direction of trim control movement relative to airplane motion. In addition, there must be means to indicate to the pilot the position of the trim device with respect to both the range of adjustment and, in the case of lateral and directional trim, the neutral position. This means must be visible to the pilot and must be located and designed to prevent confusion. The pitch trim indicator must be clearly marked with a position or range within which it has been demonstrated that take-off is safe for all center of gravity positions and each flap position approved for takeoff.

(b) Trimming devices must be designed so that, when any one connecting or transmitting element in the primary flight control system fails, adequate control for safe flight and landing is available with—

(1) For single-engine airplanes, the longitudinal trimming devices; or

(2) For multiengine airplanes, the longitudinal and directional trimming devices.

(c) Tab controls must be irreversible unless the tab is properly balanced and has no unsafe flutter characteristics. Irreversible tab systems must have adequate rigidity and reliability in the portion of the system from the tab to the attachment of the irreversible unit to the airplane structure.

(d) It must be demonstrated that the airplane is safely controllable and that the pilot can perform all maneuvers and operations necessary to effect a safe landing following any probable powered trim system runaway that reasonably might be expected in service, allowing for appropriate time delay after pilot recognition of the trim system runaway. The demonstration must be conducted at critical airplane weights and center of gravity positions.

[Doc. No. 4080, 29 FR 17955, Dec. 18, 1964, as amended by Amdt. 23–7, 34 FR 13091, Aug. 13, 1969; Amdt. 23–34, 52 FR 1830, Jan. 15, 1987; Amdt. 23–42, 56 FR 353, Jan. 3, 1991; Amdt. 23–49, 61 FR 5165, Feb. 9, 1996]

### § 23.679 Control system locks.

If there is a device to lock the control system on the ground or water:

(a) There must be a means to—

(1) Give unmistakable warning to the pilot when lock is engaged; or

(2) Automatically disengage the device when the pilot operates the primary flight controls in a normal manner.

(b) The device must be installed to limit the operation of the airplane so that, when the device is engaged, the

pilot receives unmistakable warning at the start of the takeoff.

(c) The device must have a means to preclude the possibility of it becoming inadvertently engaged in flight.

[Doc. No. 26269, 58 FR 42164, Aug. 6, 1993]

### §23.681 Limit load static tests.

(a) Compliance with the limit load requirements of this part must be shown by tests in which—

(1) The direction of the test loads produces the most severe loading in the control system; and

(2) Each fitting, pulley, and bracket used in attaching the system to the main structure is included.

(b) Compliance must be shown (by analyses or individual load tests) with the special factor requirements for control system joints subject to angular motion.

### §23.683 Operation tests.

(a) It must be shown by operation tests that, when the controls are operated from the pilot compartment with the system loaded as prescribed in paragraph (b) of this section, the system is free from—

(1) Jamming;

(2) Excessive friction; and

(3) Excessive deflection.

(b) The prescribed test loads are—

(1) For the entire system, loads corresponding to the limit airloads on the appropriate surface, or the limit pilot forces in §23.397(b), whichever are less; and

(2) For secondary controls, loads not less than those corresponding to the maximum pilot effort established under §23.405.

[Doc. No. 4080, 29 FR 17955, Dec. 18, 1964, as amended by Amdt. 23–7, 34 FR 13091, Aug. 13, 1969]

### §23.685 Control system details.

(a) Each detail of each control system must be designed and installed to prevent jamming, chafing, and interference from cargo, passengers, loose objects, or the freezing of moisture.

(b) There must be means in the cockpit to prevent the entry of foreign objects into places where they would jam the system.

(c) There must be means to prevent the slapping of cables or tubes against other parts.

(d) Each element of the flight control system must have design features, or must be distinctively and permanently marked, to minimize the possibility of incorrect assembly that could result in malfunctioning of the control system.

[Doc. No. 4080, 29 FR 17955, Dec. 18, 1964, as amended by Amdt. 23–17, 41 FR 55464, Dec. 20, 1976]

### §23.687 Spring devices.

The reliability of any spring device used in the control system must be established by tests simulating service conditions unless failure of the spring will not cause flutter or unsafe flight characteristics.

### §23.689 Cable systems.

(a) Each cable, cable fitting, turnbuckle, splice, and pulley used must meet approved specifications. In addition—

(1) No cable smaller than ⅛ inch diameter may be used in primary control systems;

(2) Each cable system must be designed so that there will be no hazardous change in cable tension throughout the range of travel under operating conditions and temperature variations; and

(3) There must be means for visual inspection at each fairlead, pulley, terminal, and turnbuckle.

(b) Each kind and size of pulley must correspond to the cable with which it is used. Each pulley must have closely fitted guards to prevent the cables from being misplaced or fouled, even when slack. Each pulley must lie in the plane passing through the cable so that the cable does not rub against the pulley flange.

(c) Fairleads must be installed so that they do not cause a change in cable direction of more than three degrees.

(d) Clevis pins subject to load or motion and retained only by cotter pins may not be used in the control system.

(e) Turnbuckles must be attached to parts having angular motion in a manner that will positively prevent binding throughout the range of travel.

(f) Tab control cables are not part of the primary control system and may be less than ⅛ inch diameter in airplanes that are safely controllable with the tabs in the most adverse positions.

[Doc. No. 4080, 29 FR 17955, Dec. 18, 1964, as amended by Amdt. 23–7, 34 FR 13091, Aug. 13, 1969]

### § 23.691 Artificial stall barrier system.

If the function of an artificial stall barrier, for example, stick pusher, is used to show compliance with § 23.201(c), the system must comply with the following:

(a) With the system adjusted for operation, the plus and minus airspeeds at which downward pitching control will be provided must be established.

(b) Considering the plus and minus airspeed tolerances established by paragraph (a) of this section, an airspeed must be selected for the activation of the downward pitching control that provides a safe margin above any airspeed at which any unsatisfactory stall characteristics occur.

(c) In addition to the stall warning required § 23.07, a warning that is clearly distinguishable to the pilot under all expected flight conditions without requiring the pilot's attention, must be provided for faults that would prevent the system from providing the required pitching motion.

(d) Each system must be designed so that the artificial stall barrier can be quickly and positively disengaged by the pilots to prevent unwanted downward pitching of the airplane by a quick release (emergency) control that meets the requirements of § 23.1329(b).

(e) A preflight check of the complete system must be established and the procedure for this check made available in the Airplane Flight Manual (AFM). Preflight checks that are critical to the safety of the airplane must be included in the limitations section of the AFM.

(f) For those airplanes whose design includes an autopilot system:

(1) A quick release (emergency) control installed in accordance with § 23.1329(b) may be used to meet the requirements of paragraph (d), of this section, and

(2) The pitch servo for that system may be used to provide the stall downward pitching motion.

(g) In showing compliance with § 23.1309, the system must be evaluated to determine the effect that any announced or unannounced failure may have on the continued safe flight and landing of the airplane or the ability of the crew to cope with any adverse conditions that may result from such failures. This evaluation must consider the hazards that would result from the airplane's flight characteristics if the system was not provided, and the hazard that may result from unwanted downward pitching motion, which could result from a failure at airspeeds above the selected stall speed.

[Doc. No. 27806, 61 FR 5165, Feb. 9, 1996]

### § 23.693 Joints.

Control system joints (in push-pull systems) that are subject to angular motion, except those in ball and roller bearing systems, must have a special factor of safety of not less than 3.33 with respect to the ultimate bearing strength of the softest material used as a bearing. This factor may be reduced to 2.0 for joints in cable control systems. For ball or roller bearings, the approved ratings may not be exceeded.

### § 23.697 Wing flap controls.

(a) Each wing flap control must be designed so that, when the flap has been placed in any position upon which compliance with the performance requirements of this part is based, the flap will not move from that position unless the control is adjusted or is moved by the automatic operation of a flap load limiting device.

(b) The rate of movement of the flaps in response to the operation of the pilot's control or automatic device must give satisfactory flight and performance characteristics under steady or changing conditions of airspeed, engine power, and attitude.

(c) If compliance with § 23.145(b)(3) necessitates wing flap retraction to positions that are not fully retracted, the wing flap control lever settings corresponding to those positions must be positively located such that a definite change of direction of movement of the

lever is necessary to select settings beyond those settings.

[Doc. No. 4080, 29 FR 17955, Dec. 18, 1964, as amended by Amdt. 23–49, 61 FR 5165, Feb. 9, 1996]

### §23.699 Wing flap position indicator.

There must be a wing flap position indicator for—

(a) Flap installations with only the retracted and fully extended position, unless—

(1) A direct operating mechanism provides a sense of ''feel'' and position (such as when a mechanical linkage is employed); or

(2) The flap position is readily determined without seriously detracting from other piloting duties under any flight condition, day or night; and

(b) Flap installation with intermediate flap positions if—

(1) Any flap position other than retracted or fully extended is used to show compliance with the performance requirements of this part; and

(2) The flap installation does not meet the requirements of paragraph (a)(1) of this section.

### §23.701 Flap interconnection.

(a) The main wing flaps and related movable surfaces as a system must—

(1) Be synchronized by a mechanical interconnection between the movable flap surfaces that is independent of the flap drive system; or by an approved equivalent means; or

(2) Be designed so that the occurrence of any failure of the flap system that would result in an unsafe flight characteristic of the airplane is extremely improbable; or

(b) The airplane must be shown to have safe flight characteristics with any combination of extreme positions of individual movable surfaces (mechanically interconnected surfaces are to be considered as a single surface).

(c) If an interconnection is used in multiengine airplanes, it must be designed to account for the unsummetrical loads resulting from flight with the engines on one side of the plane of symmetry inoperative and the remaining engines at takeoff power. For single-engine airplanes, and multiengine airplanes with no slipstream effects on the flaps, it may be assumed that 100 percent of the critical air load acts on one side and 70 percent on the other.

[Doc. No. 4080, 29 FR 17955, Dec. 18, 1964, as amended by Amdt. 23–14, 38 FR 31821, Nov. 19, 1973; Amdt. 23–42, 56 FR 353, Jan. 3, 1991; 56 FR 5455, Feb. 11, 1991; Amdt. 23–49, 61 FR 5165, Feb. 9, 1996]

### §23.703 Takeoff warning system.

For commuter category airplanes, unless it can be shown that a lift or longitudinal trim device that affects the takeoff performance of the aircraft would not give an unsafe takeoff configuration when selection out of an approved takeoff position, a takeoff warning system must be installed and meet the following requirements:

(a) The system must provide to the pilots an aural warning that is automatically activated during the initial portion of the takeoff role if the airplane is in a configuration that would not allow a safe takeoff. The warning must continue until—

(1) The configuration is changed to allow safe takeoff, or

(2) Action is taken by the pilot to abandon the takeoff roll.

(b) The means used to activate the system must function properly for all authorized takeoff power settings and procedures and throughout the ranges of takeoff weights, altitudes, and temperatures for which certification is requested.

[Doc. No. 27806, 61 FR 5166, Feb. 9, 1996]

## LANDING GEAR

### §23.721 General.

For commuter category airplanes that have a passenger seating configuration, excluding pilot seats, of 10 or more, the following general requirements for the landing gear apply:

(a) The main landing-gear system must be designed so that if it fails due to overloads during takeoff and landing (assuming the overloads to act in the upward and aft directions), the failure mode is not likely to cause the spillage of enough fuel from any part of the fuel system to consitute a fire hazard.

(b) Each airplane must be designed so that, with the airplane under control, it can be landed on a paved runway with any one or more landing-gear legs

not extended without sustaining a structural component failure that is likely to cause the spillage of enough fuel to consitute a fire hazard.

(c) Compliance with the provisions of this section may be shown by analysis or tests, or both.

[Amdt. 23–34, 52 FR 1830, Jan. 15, 1987]

### § 23.723 Shock absorption tests.

(a) It must be shown that the limit load factors selected for design in accordance with § 23.473 for takeoff and landing weights, respectively, will not be exceeded. This must be shown by energy absorption tests except that analysis based on tests conducted on a landing gear system with identical energy absorption characteristics may be used for increases in previously approved takeoff and landing weights.

(b) The landing gear may not fail, but may yield, in a test showing its reserve energy absorption capacity, simulating a descent velocity of 1.2 times the limit descent velocity, assuming wing lift equal to the weight of the airplane.

[Doc. No. 4080, 29 FR 17955, Dec. 18, 1964; 30 FR 258, Jan. 9, 1965, as amended by Amdt. 23–23, 43 FR 50593, Oct. 30, 1978; Amdt. 23–49, 61 FR 5166, Feb. 9, 1996]

### § 23.725 Limit drop tests.

(a) If compliance with § 23.723(a) is shown by free drop tests, these tests must be made on the complete airplane, or on units consisting of wheel, tire, and shock absorber, in their proper relation, from free drop heights not less than those determined by the following formula:

$$h \text{ (inches)} = 3.6\,(W/S)^{1/2}$$

However, the free drop height may not be less than 9.2 inches and need not be more than 18.7 inches.

(b) If the effect of wing lift is provided for in free drop tests, the landing gear must be dropped with an effective weight equal to

$$W_e = W\frac{\left[h+(1-L)d\right]}{(h+d)}$$

where—

$W_e$ = the effective weight to be used in the drop test (lbs.);

$h$ = specified free drop height (inches);

$d$ = deflection under impact of the tire (at the approved inflation pressure) plus the vertical component of the axle travel relative to the drop mass (inches);

$W = W_M$ for main gear units (lbs), equal to the static weight on that unit with the airplane in the level attitude (with the nose wheel clear in the case of nose wheel type airplanes);

$W = W_T$ for tail gear units (lbs.), equal to the static weight on the tail unit with the airplane in the tail-down attitude;

$W = W_N$ for nose wheel units lbs.), equal to the vertical component of the static reaction that would exist at the nose wheel, assuming that the mass of the airplane acts at the center of gravity and exerts a force of 1.0 $g$ downward and 0.33 $g$ forward; and

$L$ = the ratio of the assumed wing lift to the airplane weight, but not more than 0.667.

(c) The limit inertia load factor must be determined in a rational or conservative manner, during the drop test, using a landing gear unit attitude, and applied drag loads, that represent the landing conditions.

(d) The value of $d$ used in the computation of $W_e$ in paragraph (b) of this section may not exceed the value actually obtained in the drop test.

(e) The limit inertia load factor must be determined from the drop test in paragraph (b) of this section according to the following formula:

$$n = n_j\frac{W_e}{W} + L$$

where—

$n_j$ = the load factor developed in the drop test (that is, the acceleration $(dv/dt)$ in $g$'s recorded in the drop test) plus 1.0; and

$W_e$, W, and $L$ are the same as in the drop test computation.

(f) The value of $n$ determined in accordance with paragraph (e) may not be more than the limit inertia load factor used in the landing conditions in § 23.473.

[Doc. No. 4080, 29 FR 17955, Dec. 18, 1964, as amended by Amdt. 23–7, 34 FR 13091, Aug. 13, 1969; Amdt. 23–48, 61 FR 5148, Feb. 9, 1996]

### § 23.726 Ground load dynamic tests.

(a) If compliance with the ground load requirements of §§ 23.479 through 23.483 is shown dynamically by drop test, one drop test must be conducted that meets § 23.725 except that the drop height must be—

(1) 2.25 times the drop height prescribed in §23.725(a); or

(2) Sufficient to develop 1.5 times the limit load factor.

(b) The critical landing condition for each of the design conditions specified in §§23.479 through 23.483 must be used for proof of strength.

[Amdt. 23–7, 34 FR 13091, Aug. 13, 1969]

**§23.727 Reserve energy absorption drop test.**

(a) If compliance with the reserve energy absorption requirement in §23.723(b) is shown by free drop tests, the drop height may not be less than 1.44 times that specified in §23.725.

(b) If the effect of wing lift is provided for, the units must be dropped with an effective mass equal to $W_e=Wh/(h+d)$, when the symbols and other details are the same as in §23.725.

[Doc. No. 4080, 29 FR 17955, Dec. 18, 1964, as amended by Amdt. 23–7, 34 FR 13091, Aug. 13, 1969]

**§23.729 Landing gear extension and retraction system.**

(a) *General.* For airplanes with retractable landing gear, the following apply:

(1) Each landing gear retracting mechanism and its supporting structure must be designed for maximum flight load factors with the gear retracted and must be designed for the combination of friction, inertia, brake torque, and air loads, occurring during retraction at any airspeed up to 1.6 $V_{S1}$ with flaps retracted, and for any load factor up to those specified in §23.345 for the flaps-extended condition.

(2) The landing gear and retracting mechanism, including the wheel well doors, must withstand flight loads, including loads resulting from all yawing conditions specified in §23.351, with the landing gear extended at any speed up to at least 1.6 $V_{S1}$ with the flaps retracted.

(b) *Landing gear lock.* There must be positive means (other than the use of hydraulic pressure) to keep the landing gear extended.

(c) *Emergency operation.* For a landplane having retractable landing gear that cannot be extended manually, there must be means to extend the landing gear in the event of either—

(1) Any reasonably probable failure in the normal landing gear operation system; or

(2) Any reasonably probable failure in a power source that would prevent the operation of the normal landing gear operation system.

(d) *Operation test.* The proper functioning of the retracting mechanism must be shown by operation tests.

(e) *Position indicator.* If a retractable landing gear is used, there must be a landing gear position indicator (as well as necessary switches to actuate the indicator) or other means to inform the pilot that each gear is secured in the extended (or retracted) position. If switches are used, they must be located and coupled to the landing gear mechanical system in a manner that prevents an erroneous indication of either ''down and locked'' if each gear is not in the fully extended position, or ''up and locked'' if each landing gear is not in the fully retracted position.

(f) *Landing gear warning.* For landplanes, the following aural or equally effective landing gear warning devices must be provided:

(1) A device that functions continuously when one or more throttles are closed beyond the power settings normally used for landing approach if the landing gear is not fully extended and locked. A throttle stop may not be used in place of an aural device. If there is a manual shutoff for the warning device prescribed in this paragraph, the warning system must be designed so that when the warning has been suspended after one or more throttles are closed, subsequent retardation of any throttle to, or beyond, the position for normal landing approach will activate the warning device.

(2) A device that functions continuously when the wing flaps are extended beyond the maximum approach flap position, using a normal landing procedure, if the landing gear is not fully extended and locked. There may not be a manual shutoff for this warning device. The flap position sensing unit may be installed at any suitable location. The system for this device may use any part of the system (including the aural warning device) for the device required in paragraph (f)(1) of this section.

(g) *Equipment located in the landing gear bay*. If the landing gear bay is used as the location for equipment other than the landing gear, that equipment must be designed and installed to minimize damage from items such as a tire burst, or rocks, water, and slush that may enter the landing gear bay.

[Doc. No. 4080, 29 FR 17955, Dec. 18, 1964, as amended by Amdt. 23–7, 34 FR 13091, Aug. 13, 1969; Amdt. 23–21, 43 FR 2318, Jan. 1978; Amdt. 23–26, 45 FR 60171, Sept. 11, 1980; Amdt. 23–45, 58 FR 42164, Aug. 6, 1993; Amdt. 23–49, 61 FR 5166, Feb. 9, 1996]

### § 23.731 Wheels.

(a) The maximum static load rating of each wheel may not be less than the corresponding static ground reaction with—

(1) Design maximum weight; and

(2) Critical center of gravity.

(b) The maximum limit load rating of each wheel must equal or exceed the maximum radial limit load determined under the applicable ground load requirements of this part.

[Doc. No. 4080, 29 FR 17955, Dec. 18, 1964, as amended by Amdt. 23–45, 58 FR 42165, Aug. 6, 1993]

### § 23.733 Tires.

(a) Each landing gear wheel must have a tire whose approved tire ratings (static and dynamic) are not exceeded—

(1) By a load on each main wheel tire) to be compared to the static rating approved for such tires) equal to the corresponding static ground reaction under the design maximum weight and critical center of gravity; and

(2) By a load on nose wheel tires (to be compared with the dynamic rating approved for such tires) equal to the reaction obtained at the nose wheel, assuming the mass of the airplane to be concentrated at the most critical center of gravity and exerting a force of 1.0 W downward and 0.31 W forward (where W is the design maximum weight), with the reactions distributed to the nose and main wheels by the principles of statics and with the drag reaction at the ground applied only at wheels with brakes.

(b) If specially constructed tires are used, the wheels must be plainly and conspicuously marked to that effect. The markings must include the make, size, number of plies, and identification marking of the proper tire.

(c) Each tire installed on a retractable landing gear system must, at the maximum size of the tire type expected in service, have a clearance to surrounding structure and systems that is adequate to prevent contact between the tire and any part of the structure of systems.

[Doc. No. 4080, 29 FR 17955, Dec. 18, 1964, as amended by Amdt. 23–7, 34 FR 13092, Aug. 13, 1969; Amdt. 23–17, 41 FR 55464, Dec. 20, 1976; Amdt. 23–45, 58 FR 42165, Aug. 6, 1993]

### § 23.735 Brakes.

(a) Brakes must be provided. The landing brake kinetic energy capacity rating of each main wheel brake assembly must not be less than the kinetic energy absorption requirements determined under either of the following methods:

(1) The brake kinetic energy absorption requirements must be based on a conservative rational analysis of the sequence of events expected during landing at the design landing weight.

(2) Instead of a rational analysis, the kinetic energy absorption requirements for each main wheel brake assembly may be derived from the following formula:

$$KE=0.0443\ WV^2/N$$

where—

KE=Kinetic energy per wheel (ft.-lb.);

W=Design landing weight (lb.);

V=Airplane speed in knots. V must be not less than $V_S\sqrt{}$, the poweroff stalling speed of the airplane at sea level, at the design landing weight, and in the landing configuration; and

N=Number of main wheels with brakes.

(b) Brakes must be able to prevent the wheels from rolling on a paved runway with takeoff power on the critical engine, but need not prevent movement of the airplane with wheels locked.

(c) During the landing distance determination required by § 23.75, the pressure on the wheel braking system must not exceed the pressure specified by the brake manufacturer.

(d) If antiskid devices are installed, the devices and associated systems must be designed so that no single

probable malfunction or failure will result in a hazardous loss of braking ability or directional control of the airplane.

(e) In addition, for commuter category airplanes, the rejected takeoff brake kinetic energy capacity rating of each main wheel brake assembly must not be less than the kinetic energy absorption requirements determined under either of the following methods—

(1) The brake kinetic energy absorption requirements must be based on a conservative rational analysis of the sequence of events expected during a rejected takeoff at the design takeoff weight.

(2) Instead of a rational analysis, the kinetic energy absorption requirements for each main wheel brake assembly may be derived from the following formula—

$$KE=0.0443\ WV^2N$$

where,

KE=Kinetic energy per wheel (ft.-lbs.);

W=Design takeoff weight (lbs.);

V=Ground speed, in knots, associated with the maximum value of $V_1$ selected in accordance with §23.51(c)(1);

N=Number of main wheels with brakes.

[Amdt. 23–7, 34 FR 13092, Aug. 13, 1969, as amended by Amdt. 23–24, 44 FR 68742, Nov. 29, 1979; Amdt. 23–42, 56 FR 354, Jan. 3, 1991; Amdt. 23–49, 61 FR 5166, Feb. 9, 1996]

### §23.737 Skis.

The maximum limit load rating for each ski must equal or exceed the maximum limit load determined under the applicable ground load requirements of this part.

[Doc. No. 26269, 58 FR 42165, Aug. 6, 1993]

### §23.745 Nose/tail wheel steering.

(a) If nose/tail wheel steering is installed, it must be demonstrated that its use does not require exceptional pilot skill during takeoff and landing, in crosswinds, or in the event of an engine failure; or its use must be limited to low speed maneuvering.

(b) Movement of the pilot's steering control must not interfere with the retraction or extension of the landing gear.

[Doc. No. 27806, 61 FR 5166, Feb. 9, 1996]

## FLOATS AND HULLS

### §23.751 Main float buoyancy.

(a) Each main float must have—

(1) A buoyancy of 80 percent in excess of the buoyancy required by that float to support its portion of the maximum weight of the seaplane or amphibian in fresh water; and

(2) Enough watertight compartments to provide reasonable assurance that the seaplane or amphibian will stay afloat without capsizing if any two compartments of any main float are flooded.

(b) Each main float must contain at least four watertight compartments approximately equal in volume.

[Doc. No. 4080, 29 FR 17955, Dec. 18, 1964, as amended by Amdt. 23–45, 58 FR 42165, Aug. 6, 1993]

### §23.753 Main float design.

Each seaplane main float must meet the requirements of §23.521.

[Doc. No. 26269, 58 FR 42165, Aug. 6, 1993]

### §23.755 Hulls.

(a) The hull of a hull seaplane or amphibian of 1,500 pounds or more maximum weight must have watertight compartments designed and arranged so that the hull auxiliary floats, and tires (if used), will keep the airplane afloat without capsizing in fresh water when—

(1) For airplanes of 5,000 pounds or more maximum weight, any two adjacent compartments are flooded; and

(2) For airplanes of 1,500 pounds up to, but not including, 5,000 pounds maximum weight, any single compartment is flooded.

(b) Watertight doors in bulkheads may be used for communication between compartments.

[Doc. No. 4080, 29 FR 17955, Dec. 18, 1964, as amended by Amdt. 23–45, 58 FR 42165, Aug. 6, 1993; Amdt. 23–48, 61 FR 5148, Feb. 9, 1996]

### §23.757 Auxiliary floats.

Auxiliary floats must be arranged so that, when completely submerged in fresh water, they provide a righting moment of at least 1.5 times the upsetting moment caused by the seaplane or amphibian being tilted.

PERSONNEL AND CARGO ACCOMMODATIONS

**§ 23.771 Pilot compartment.**

For each pilot compartment—

(a) The compartment and its equipment must allow each pilot to perform his duties without unreasonable concentration or fatigue;

(b) Where the flight crew are separated from the passengers by a partition, an opening or openable window or door must be provided to facilitate communication between flight crew and the passengers; and

(c) The aerodynamic controls listed in § 23.779, excluding cables and control rods, must be located with respect to the propellers so that no part of the pilot or the controls lies in the region between the plane of rotation of any inboard propeller and the surface generated by a line passing through the center of the propeller hub making an angle of 5 degrees forward or aft of the plane of rotation of the propeller.

[Doc. No. 4080, 29 FR 17955, Dec. 18, 1964, as amended by Amdt. 23–14, 38 FR 31821, Nov. 19, 1973]

**§ 23.773 Pilot compartment view.**

(a) Each pilot compartment must be—

(1) Arranged with sufficiently extensive, clear and undistorted view to enable the pilot to safely taxi, takeoff, approach, land, and perform any maneuvers within the operating limitations of the airplane.

(2) Free from glare and reflections that could interfere with the pilot's vision. Compliance must be shown in all operations for which certification is requested; and

(3) Designed so that each pilot is protected from the elements so that moderate rain conditions do not unduly impair the pilot's view of the flight path in normal flight and while landing.

(b) Each pilot compartment must have a means to either remove or prevent the formation of fog or frost on an area of the internal portion of the windshield and side windows sufficiently large to provide the view specified in paragraph (a)(1) of this section. Compliance must be shown under all expected external and internal ambient operating conditions, unless it can be shown that the windshield and side windows can be easily cleared by the pilot without interruption of moral pilot duties.

[Doc. No. 26269, 58 FR 42165, Aug. 6, 1993]

**§ 23.775 Windshields and windows.**

(a) The internal panels of windshields and windows must be constructed of a nonsplintering material, such as nonsplintering safety glass.

(b) The design of windshields, windows, and canopies in pressurized airplanes must be based on factors peculiar to high altitude operation, including—

(1) The effects of continuous and cyclic pressurization loadings;

(2) The inherent characteristics of the material used; and

(3) The effects of temperatures and temperature gradients.

(c) On pressurized airplanes, if certification for operation up to and including 25,000 feet is requested, an enclosure canopy including a representative part of the installation must be subjected to special tests to account for the combined effects of continuous and cyclic pressurization loadings and flight loads, or compliance with the fail-safe requirements of paragraph (d) of this section must be shown.

(d) If certification for operation above 25,000 feet is requested the windshields, window panels, and canopies must be strong enough to withstand the maximum cabin pressure differential loads combined with critical aerodynamic pressure and temperature effects, after failure of any load-carrying element of the windshield, window panel, or canopy.

(e) The windshield and side windows forward of the pilot's back when the pilot is seated in the normal flight position must have a luminous transmittance value of not less than 70 percent.

(f) Unless operation in known or forecast icing conditions is prohibited by operating limitations, a means must be provided to prevent or to clear accumulations of ice from the windshield so that the pilot has adequate view for taxi, takeoff, approach, landing, and to perform any maneuvers within the operating limitations of the airplane.

(g) In the event of any probable single failure, a transparency heating system must be incapable of raising the temperature of any windshield or window to a point where there would be—

(1) Structural failure that adversely affects the integrity of the cabin; or

(2) There would be a danger of fire.

(h) In addition, for commuter category airplanes, the following applies:

(1) Windshield panes directly in front of the pilots in the normal conduct of their duties, and the supporting structures for these panes, must withstand, without penetration, the impact of a two-pound bird when the velocity of the airplane (relative to the bird along the airplane's flight path) is equal to the airplane's maximum approach flap speed.

(2) The windshield panels in front of the pilots must be arranged so that, assuming the loss of vision through any one panel, one or more panels remain available for use by a pilot seated at a pilot station to permit continued safe flight and landing.

[Doc. No. 4080, 29 FR 17955, Dec. 18, 1964, as amended by Amdt. 23–7, 34 FR 13092, Aug. 13, 1969; Amdt. 23–45, 58 FR 42165, Aug. 6, 1993; 58 FR 51970, Oct. 5, 1993; Amdt. 23–49, 61 FR 5166, Feb. 9, 1996]

### §23.777 Cockpit controls.

(a) Each cockpit control must be located and (except where its function is obvious) identified to provide convenient operation and to prevent confusion and inadvertent operation.

(b) The controls must be located and arranged so that the pilot, when seated, has full and unrestricted movement of each control without interference from either his clothing or the cockpit structure.

(c) Powerplant controls must be located—

(1) For multiengine airplanes, on the pedestal or overhead at or near the center of the cockpit;

(2) For single and tandem seated single-engine airplanes, on the left side console or instrument panel;

(3) For other single-engine airplanes at or near the center of the cockpit, on the pedestal, instrument panel, or overhead; and

(4) For airplanes, with side-by-side pilot seats and with two sets of powerplant controls, on left and right consoles.

(d) The control location order from left to right must be power (thrust) lever, propeller (rpm control), and mixture control (condition lever and fuel cutoff for turbine-powered airplanes). Power (thrust) levers must be at least one inch higher or longer to make them more prominent than propeller (rpm control) or mixture controls. Carburetor heat or alternate air control must be to the left of the throttle or at least eight inches from the mixture control when located other than on a pedestal. Carburetor heat or alternate air control, when located on a pedestal must be aft or below the power (thrust) lever. Supercharger controls must be located below or aft of the propeller controls. Airplanes with tandem seating or single-place airplanes may utilize control locations on the left side of the cabin compartment; however, location order from left to right must be power (thrust) lever, propeller (rpm control) and mixture control.

(e) Identical powerplant controls for each engine must be located to prevent confusion as to the engines they control.

(1) Conventional multiengine powerplant controls must be located so that the left control(s) operates the left engines(s) and the right control(s) operates the right engine(s).

(2) On twin-engine airplanes with front and rear engine locations (tandem), the left powerplant controls must operate the front engine and the right powerplant controls must operate the rear engine.

(f) Wing flap and auxiliary lift device controls must be located—

(1) Centrally, or to the right of the pedestal or powerplant throttle control centerline; and

(2) Far enough away from the landing gear control to avoid confusion.

(g) The landing gear control must be located to the left of the throttle centerline or pedestal centerline.

(h) Each fuel feed selector control must comply with §23.995 and be located and arranged so that the pilot can see and reach it without moving any seat or primary flight control when his seat is at any position in which it can be placed.

(1) For a mechanical fuel selector:

(i) The indication of the selected fuel valve position must be by means of a pointer and must provide positive identification and feel (detent, etc.) of the selected position.

(ii) The position indicator pointer must be located at the part of the handle that is the maximum dimension of the handle measured from the center of rotation.

(2) For electrical or electronic fuel selector:

(i) Digital controls or electrical switches must be properly labelled.

(ii) Means must be provided to indicate to the flight crew the tank or function selected. Selector switch position is not acceptable as a means of indication. The ''off'' or ''closed'' position must be indicated in red.

(3) If the fuel valve selector handle or electrical or digital selection is also a fuel shut-off selector, the off position marking must be colored red. If a separate emergency shut-off means is provided, it also must be colored red.

[Doc. No. 4080, 29 FR 17955, Dec. 18, 1964, as amended by Amdt. 23–7, 34 FR 13092, Aug. 13, 1969; Amdt. 23–33, 51 FR 26656, July 24, 1986; Amdt. 23–51, 61 FR 5136, Feb. 9, 1996]

## § 23.779 Motion and effect of cockpit controls.

Cockpit controls must be designed so that they operate in accordance with the following movement and actuation:

(a) Aerodynamic controls:

| | *Motion and effect* |
|---|---|
| (1) *Primary controls:* | |
| Aileron | Right (clockwise) for right wing down. |
| Elevator | Rearward for nose up. |
| Rudder | Right pedal forward for nose right. |
| (2) *Secondary controls:* | |
| Flaps (or auxiliary lift devices). | Forward or up for flaps up or auxiliary device stowed; rearward or down for flaps down or auxiliary device deployed. |
| Trim tabs (or equivalent). | Switch motion or mechanical rotation of control to produce similar rotation of the airplane about an axis parallel to the axis control. Axis of roll trim control may be displaced to accommodate comfortable actuation by the pilot. For single-engine airplanes, direction of pilot's hand movement must be in the same sense as airplane response for rudder trim if only a portion of a rotational element is accessible. |

(b) Powerplant and auxiliary controls:

| | *Motion and effect* |
|---|---|
| (1) *Powerplant controls:* | |
| Power (thrust) lever. | Forward to increase forward thrust and rearward to increase rearward thrust. |
| Propellers | Forward to increase rpm. |
| Mixture | Forward or upward for rich. |
| Fuel | Forward for open. |
| Carburetor, air heat or alternate air. | Forward or upward for cold. |
| Supercharger. | Forward or upward for low blower. |
| Turbosuperchargers. | Forward, upward, or clockwise to increase pressure. |
| Rotary controls. | Clockwise from off to full on. |
| (2) *Auxiliary controls:* | |
| Fuel tank selector. | Right for right tanks, left for left tanks. |
| Landing gear. | Down to extend. |
| Speed brakes. | Aft to extend. |

[Amdt. 23–33, 51 FR 26656, July 24, 1986, as amended by Amdt. 23–51, 61 FR 5136, Feb. 9, 1996]

## § 23.781 Cockpit control knob shape.

(a) Flap and landing gear control knobs must conform to the general shapes (but not necessarily the exact sizes or specific proportions) in the following figure:

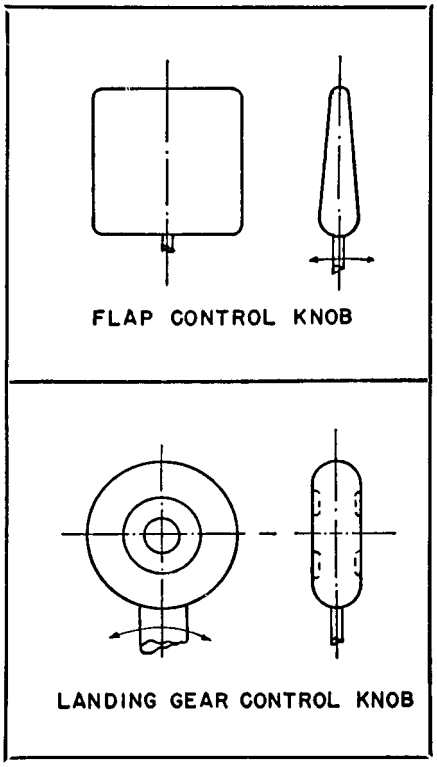
FLAP CONTROL KNOB
LANDING GEAR CONTROL KNOB

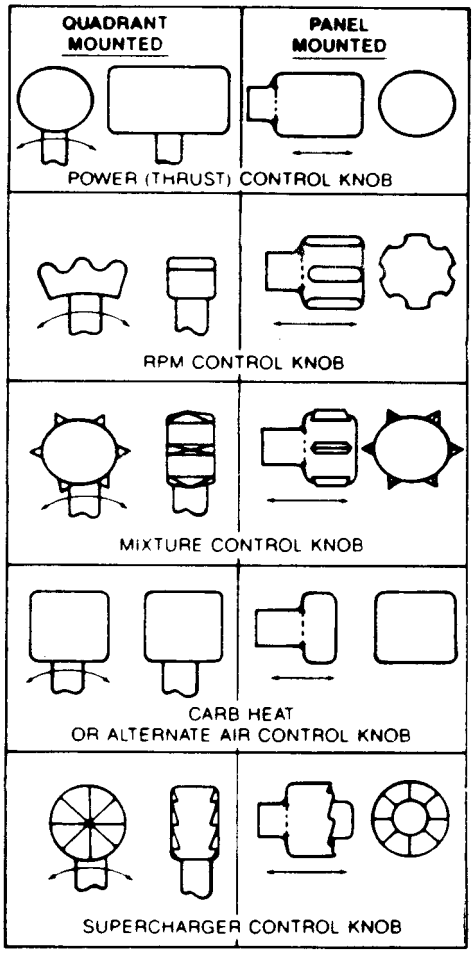


(b) Powerplant control knobs must conform to the general shapes (but not necessarily the exact sizes or specific proportions) in the following figure:

[Doc. No. 4080, 29 FR 17955, Dec. 18, 1964; 30 FR 258, Jan. 9, 1965, as amended by Amdt. 23–33, 51 FR 26657, July 24, 1986]

**§ 23.783 Doors.**

(a) Each closed cabin with passenger accommodations must have at least one adequate and easily accessible external door.

(b) Passenger doors must not be located with respect to any propeller disk or any other potential hazard so as to endanger persons using the door.

(c) Each external passenger or crew door must comply with the following requirements:

(1) There must be a means to lock and safeguard the door against inadvertent opening during flight by persons, by cargo, or as a result of mechanical failure.

(2) The door must be openable from the inside and the outside when the internal locking mechanism is in the locked position.

(3) There must be a means of opening which is simple and obvious and is arranged and marked inside and outside so that the door can be readily located, unlocked, and opened, even in darkness.

(4) The door must meet the marking requirements of §23.811 of this part.

(5) The door must be reasonably free from jamming as a result of fuselage deformation in an emergency landing.

(6) Auxiliary locking devices that are actuated externally to the airplane may be used but such devices must be overridden by the normal internal opening means.

(d) In addition, each external passenger or crew door, for a commuter category airplane, must comply with the following requirements:

(1) Each door must be openable from both the inside and outside, even though persons may be crowded against the door on the inside of the airplane.

(2) If inward opening doors are used, there must be a means to prevent occupants from crowding against the door to the extent that would interfere with opening the door.

(3) Auxiliary locking devices may be used.

(e) Each external door on a commuter category airplane, each external door forward of any engine or propeller on a normal, utility, or acrobatic category airplane, and each door of the pressure vessel on a pressurized airplane must comply with the following requirements:

(1) There must be a means to lock and safeguard each external door, including cargo and service type doors, against inadvertent opening in flight, by persons, by cargo, or as a result of mechanical failure or failure of a single structural element, either during or after closure.

(2) There must be a provision for direct visual inspection of the locking mechanism to determine if the external door, for which the initial opening movement is not inward, is fully closed and locked. The provisions must be discernible, under operating lighting conditions, by a crewmember using a flashlight or an equivalent lighting source.

(3) There must be a visual warning means to signal a flight crewmember if the external door is not fully closed and locked. The means must be designed so that any failure, or combination of failures, that would result in an erroneous closed and locked indication is improbable for doors for which the initial opening movement is not inward.

(f) In addition, for commuter category airplanes, the following requirements apply:

(1) Each passenger entry door must qualify as a floor level emergency exit. This exit must have a rectangular opening of not less than 24 inches wide by 48 inches high, with corner radii not greater than one-third the width of the exit.

(2) If an integral stair is installed at a passenger entry door, the stair must be designed so that, when subjected to the inertia loads resulting from the ultimate static load factors in §23.561(b)(2) and following the collapse of one or more legs of the landing gear, it will not reduce the effectiveness of emergency egress through the passenger entry door.

(g) If lavatory doors are installed, they must be designed to preclude an occupant from becoming trapped inside the lavatory. If a locking mechanism is installed, it must be capable of being unlocked from outside of the lavatory.

[Doc. No. 4080, 29 FR 17955, Dec. 18, 1964; 30 FR 258, Jan. 9, 1965, as amended by Amdt. 23–36, 53 FR 30813, Aug. 15, 1988; Amdt. 23–46, 59 FR 25772, May 17, 1994; Amdt. 23–49, 61 FR 5166, Feb. 9, 1996]

### §23.785 Seats, berths, litters, safety belts, and shoulder harnesses.

There must be a seat or berth for each occupant that meets the following:

(a) Each seat/restraint system and the supporting structure must be designed to support occupants weighing at least 215 pounds when subjected to the maximum load factors corresponding to the specified flight and ground load conditions, as defined in the approved operating envelope of the airplane. In addition, these loads must be multiplied by a factor of 1.33 in determining the strength of all fittings and the attachment of—

(1) Each seat to the structure; and

(2) Each safety belt and shoulder harness to the seat or structure.

(b) Each forward-facing or aft-facing seat/restraint system in normal, utility, or acrobatic category airplanes must consist of a seat, a safety belt, and a shoulder harness, with a metal-to-metal latching device, that are designed to provide the occupant protection provisions required in § 23.562. Other seat orientations must provide the same level of occupant protection as a forward-facing or aft-facing seat with a safety belt and a shoulder harness, and must provide the protection provisions of § 23.562.

(c) For commuter category airplanes, each seat and the supporting structure must be designed for occupants weighing at least 170 pounds when subjected to the inertia loads resulting from the ultimate static load factors prescribed in § 23.561(b)(2) of this part. Each occupant must be protected from serious head injury when subjected to the inertia loads resulting from these load factors by a safety belt and shoulder harness, with a metal-to-metal latching device, for the front seats and a safety belt, or a safety belt and shoulder harness, with a metal-to-metal latching device, for each seat other than the front seats.

(d) Each restraint system must have a single-point release for occupant evacuation.

(e) The restraint system for each crewmember must allow the crewmember, when seated with the safety belt and shoulder harness fastened, to perform all functions necessary for flight operations.

(f) Each pilot seat must be designed for the reactions resulting from the application of pilot forces to the primary flight controls as prescribed in § 23.395 of this part.

(g) There must be a means to secure each safety belt and shoulder harness, when not in use, to prevent interference with the operation of the airplane and with rapid occupant egress in an emergency.

(h) Unless otherwise placarded, each seat in a utility or acrobatic category airplane must be designed to accommodate an occupant wearing a parachute.

(i) The cabin area surrounding each seat, including the structure, interior walls, instrument panel, control wheel, pedals, and seats within striking distance of the occupant's head or torso (with the restraint system fastened) must be free of potentially injurious objects, sharp edges, protuberances, and hard surfaces. If energy absorbing designs or devices are used to meet this requirement, they must protect the occupant from serious injury when the occupant is subjected to the inertia loads resulting from the ultimate static load factors prescribed in § 23.561(b)(2) of this part, or they must comply with the occupant protection provisions of § 23.562 of this part, as required in paragraphs (b) and (c) of this section.

(j) Each seat track must be fitted with stops to prevent the seat from sliding off the track.

(k) Each seat/restraint system may use design features, such as crushing or separation of certain components, to reduce occupant loads when showing compliance with the requirements of § 23.562 of this part; otherwise, the system must remain intact.

(l) For the purposes of this section, a front seat is a seat located at a flight crewmember station or any seat located alongside such a seat.

(m) Each berth, or provisions for a litter, installed parallel to the longitudinal axis of the airplane, must be designed so that the forward part has a padded end-board, canvas diaphragm, or equivalent means that can withstand the load reactions from a 215-pound occupant when subjected to the inertia loads resulting from the ultimate static load factors of § 23.561(b)(2) of this part. In addition—

(1) Each berth or litter must have an occupant restraint system and may not have corners or other parts likely to cause serious injury to a person occupying it during emergency landing conditions; and

(2) Occupant restraint system attachments for the berth or litter must withstand the inertia loads resulting from the ultimate static load factors of § 23.561(b)(2) of this part.

(n) Proof of compliance with the static strength requirements of this section for seats and berths approved as

part of the type design and for seat and berth installations may be shown by—

(1) Structural analysis, if the structure conforms to conventional airplane types for which existing methods of analysis are known to be reliable;

(2) A combination of structural analysis and static load tests to limit load; or

(3) Static load tests to ultimate loads.

[Amdt. 23–36, 53 FR 30813, Aug. 15, 1988; Amdt. 23–36, 54 FR 50737, Dec. 11, 1989; Amdt. 23–49, 61 FR 5167, Feb. 9, 1996]

### §23.787 Baggage and cargo compartments.

(a) Each baggage and cargo compartment must:

(1) Be designed for its placarded maximum weight of contents and for the critical load distributions at the appropriate maximum load factors corresponding to the flight and ground load conditions of this part.

(2) Have means to prevent the contents of any compartment from becoming a hazard by shifting, and to protect any controls, wiring, lines, equipment or accessories whose damage or failure would affect safe operations.

(3) Have a means to protect occupants from injury by the contents of any compartment, located aft of the occupants and separated by structure, when the ultimate forward inertial load factor is 9g and assuming the maximum allowed baggage or cargo weight for the compartment.

(b) Designs that provide for baggage or cargo to be carried in the same compartment as passengers must have a means to protect the occupants from injury when the baggage or cargo is subjected to the inertial loads resulting from the ultimate static load factors of §23.561(b)(3), assuming the maximum allowed baggage or cargo weight for the compartment.

(c) For airplanes that are used only for the carriage of cargo, the flightcrew emergency exits must meet the requirements of §23.807 under any cargo loading conditions.

[Doc. No. 27806, 61 FR 5167, Feb. 9, 1996]

### §23.791 Passenger information signs.

For those airplanes in which the flightcrew members cannot observe the other occupants' seats or where the flightcrew members' compartment is separated from the passenger compartment, there must be at least one illuminated sign (using either letters or symbols) notifying all passengers when seat belts should be fastened. Signs that notify when seat belts should be fastened must:

(a) When illuminated, be legible to each person seated in the passenger compartment under all probable lighting conditions; and

(b) Be installed so that a flightcrew member can, when seated at the flightcrew member's station, turn the illumination on and off.

[Doc. No. 27806, 61 FR 5167, Feb. 9, 1996]

### §23.803 Emergency evacuation.

(a) For commuter category airplanes, an evacuation demonstration must be conducted utilizing the maximum number of occupants for which certification is desired. The demonstration must be conducted under simulated night conditions using only the emergency exits on the most critical side of the airplane. The participants must be representative of average airline passengers with no prior practice or rehearsal for the demonstration. Evacuation must be completed within 90 seconds.

(b) In addition, when certification to the emergency exit provisions of §23.807(d)(4) is requested, only the emergency lighting system required by §23.812 may be used to provide cabin interior illumination during the evacuation demonstration required in paragraph (a) of this section.

[Amdt. 23–34, 52 FR 1831, Jan. 15, 1987, as amended by Amdt. 23–46, 59 FR 25773, May 17, 1994]

### §23.805 Flightcrew emergency exits.

For airplanes where the proximity of the passenger emergency exits to the flightcrew area does not offer a convenient and readily accessible means of evacuation for the flightcrew, the following apply:

(a) There must be either one emergency exit on each side of the airplane, or a top hatch emergency exit, in the flightcrew area;

(b) Each emergency exit must be located to allow rapid evacuation of the crew and have a size and shape of at least a 19- by 20-inch unobstructed rectangular opening; and

(c) For each emergency exit that is not less than six feet from the ground, an assisting means must be provided. The assisting means may be a rope or any other means demonstrated to be suitable for the purpose. If the assisting means is a rope, or an approved device equivalent to a rope, it must be—

(1) Attached to the fuselage structure at or above the top of the emergency exit opening or, for a device at a pilot's emergency exit window, at another approved location if the stowed device, or its attachment, would reduce the pilot's view; and

(2) Able (with its attachment) to withstand a 400-pound static load.

[Doc. No. 26324, 59 FR 25773, May 17, 1994]

**§ 23.807 Emergency exits.**

(a) *Number and location.* Emergency exits must be located to allow escape without crowding in any probable crash attitude. The airplane must have at least the following emergency exits:

(1) For all airplanes with a seating capacity of two or more, excluding airplanes with canopies, at least one emergency exit on the opposite side of the cabin from the main door specified in § 23.783 of this part.

(2) [Reserved]

(3) If the pilot compartment is separated from the cabin by a door that is likely to block the pilot's escape in a minor crash, there must be an exit in the pilot's compartment. The number of exits required by paragraph (a)(1) of this section must then be separately determined for the passenger compartment, using the seating capacity of that compartment.

(4) Emergency exits must not be located with respect to any propeller disk or any other potential hazard so as to endanger persons using that exit.

(b) *Type and operation.* Emergency exits must be movable windows, panels, canopies, or external doors, openable from both inside and outside the airplane, that provide a clear and unobstructed opening large enough to admit a 19-by-26-inch ellipse. Auxiliary locking devices used to secure the airplane must be designed to be overridden by the normal internal opening means. The inside handles of emergency exits that open outward must be adequately protected against inadvertent operation. In addition, each emergency exit must—

(1) Be readily accessible, requiring no exceptional agility to be used in emergencies;

(2) Have a method of opening that is simple and obvious;

(3) Be arranged and marked for easy location and operation, even in darkness;

(4) Have reasonable provisions against jamming by fuselage deformation; and

(5) In the case of acrobatic category airplanes, allow each occupant to abandon the airplane at any speed between $V_{SO}$ and $V_D$; and

(6) In the case of utility category airplanes certificated for spinning, allow each occupant to abandon the airplane at the highest speed likely to be achieved in the maneuver for which the airplane is certificated.

(c) *Tests.* The proper functioning of each emergency exit must be shown by tests.

(d) *Doors and exits.* In addition, for commuter category airplanes, the following requirements apply:

(1) In addition to the passenger entry door—

(i) For an airplane with a total passenger seating capacity of 15 or fewer, an emergency exit, as defined in paragraph (b) of this section, is required on each side of the cabin; and

(ii) For an airplane with a total passenger seating capacity of 16 through 19, three emergency exits, as defined in paragraph (b) of this section, are required with one on the same side as the passenger entry door and two on the side opposite the door.

(2) A means must be provided to lock each emergency exit and to safeguard against its opening in flight, either inadvertently by persons or as a result of mechanical failure. In addition, a means for direct visual inspection of the locking mechanism must be provided to determine that each emergency exit for which the initial opening movement is outward is fully locked.

(3) Each required emergency exit, except floor level exits, must be located over the wing or, if not less than six feet from the ground, must be provided with an acceptable means to assist the occupants to descend to the ground. Emergency exits must be distributed as uniformly as practical, taking into account passenger seating configuration.

(4) Unless the applicant has complied with paragraph (d)(1) of this section, there must be an emergency exit on the side of the cabin opposite the passenger entry door, provided that—

(i) For an airplane having a passenger seating configuration of nine or fewer, the emergency exit has a rectangular opening measuring not less than 19 inches by 26 inches high with corner radii not greater than one-third the width of the exit, located over the wing, with a step up inside the airplane of not more than 29 inches and a step down outside the airplane of not more than 36 inches;

(ii) For an airplane having a passenger seating configuration of 10 to 19 passengers, the emergency exit has a rectangular opening measuring not less than 20 inches wide by 36 inches high, with corner radii not greater than one-third the width of the exit, and with a step up inside the airplane of not more than 20 inches. If the exit is located over the wing, the step down outside the airplane may not exceed 27 inches; and

(iii) The airplane complies with the additional requirements of §§23.561(b)(2)(iv), 23.803(b), 23.811(c), 23.812, 23.813(b), and 23.815.

(e) For multiengine airplanes, ditching emergency exits must be provided in accordance with the following requirements, unless the emergency exits required by paragraph (a) or (d) of this section already comply with them:

(1) One exit above the waterline on each side of the airplane having the dimensions specified in paragraph (b) or (d) of this section, as applicable; and

(2) If side exits cannot be above the waterline, there must be a readily accessible overhead hatch emergency exit that has a rectangular opening measuring not less than 20 inches wide by 36 inches long, with corner radii not greater than one-third the width of the exit.

[Doc. No. 4080, 29 FR 17955, Dec. 18, 1964, as amended by Amdt. 23–7, 34 FR 13092, Aug. 13, 1969; Amdt. 23–10, 36 FR 2864, Feb. 11, 1971; Amdt. 23–34, 52 FR 1831, Jan. 15, 1987; Amdt. 23–36, 53 FR 30814, Aug. 15, 1988; 53 FR 34194, Sept. 2, 1988; Amdt. 23–46, 59 FR 25773, May 17, 1994; Amdt. 23–49, 61 FR 5167, Feb. 9, 1996]

### §23.811 Emergency exit marking.

(a) Each emergency exit and external door in the passenger compartment must be externally marked and readily identifiable from outside the airplane by—

(1) A conspicuous visual identification scheme; and

(2) A permanent decal or placard on or adjacent to the emergency exit which shows the means of opening the emergency exit, including any special instructions, if applicable.

(b) In addition, for commuter category airplanes, these exits and doors must be internally marked with the word ''exit'' by a sign which has white letters 1 inch high on a red background 2 inches high, be self-illuminated or independently, internally electrically illuminated, and have a minimum brightness of at least 160 microlamberts. The color may be reversed if the passenger compartment illumination is essentially the same.

(c) In addition, when certification to the emergency exit provisions of §23.807(d)(4) is requested, the following apply:

(1) Each emergency exit, its means of access, and its means of opening, must be conspicuously marked;

(2) The identity and location of each emergency exit must be recognizable from a distance equal to the width of the cabin;

(3) Means must be provided to assist occupants in locating the emergency exits in conditions of dense smoke;

(4) The location of the operating handle and instructions for opening each emergency exit from inside the airplane must be shown by marking that is readable from a distance of 30 inches;

(5) Each passenger entry door operating handle must—

(i) Be self-illuminated with an initial brightness of at least 160 microlamberts; or

(ii) Be conspicuously located and well illuminated by the emergency lighting even in conditions of occupant crowding at the door;

(6) Each passenger entry door with a locking mechanism that is released by rotary motion of the handle must be marked—

(i) With a red arrow, with a shaft of at least three-fourths of an inch wide and a head twice the width of the shaft, extending along at least 70 degrees of arc at a radius approximately equal to three-fourths of the handle length;

(ii) So that the center line of the exit handle is within ± one inch of the projected point of the arrow when the handle has reached full travel and has released the locking mechanism;

(iii) With the word ''open'' in red letters, one inch high, placed horizontally near the head of the arrow; and

(7) In addition to the requirements of paragraph (a) of this section, the external marking of each emergency exit must—

(i) Include a 2-inch colorband outlining the exit; and

(ii) Have a color contrast that is readily distinguishable from the surrounding fuselage surface. The contrast must be such that if the reflectance of the darker color is 15 percent or less, the reflectance of the lighter color must be at least 45 percent. ''Reflectance'' is the ratio of the luminous flux reflected by a body to the luminous flux it receives. When the reflectance of the darker color is greater than 15 percent, at least a 30 percent difference between its reflectance and the reflectance of the lighter color must be provided.

[Amdt. 23–36, 53 FR 30814, Aug. 15, 1988; 53 FR 34194, Sept. 2, 1988, as amended by Amdt. 23–46, 59 FR 25773, May 17, 1994]

### § 23.812 Emergency lighting.

When certification to the emergency exit provisions of § 23.807(d)(4) is requested, the following apply:

(a) An emergency lighting system, independent of the main cabin lighting system, must be installed. However, the source of general cabin illumination may be common to both the emergency and main lighting systems if the power supply to the emergency lighting system is independent of the power supply to the main lighting system.

(b) There must be a crew warning light that illuminates in the cockpit when power is on in the airplane and the emergency lighting control device is not armed.

(c) The emergency lights must be operable manually from the flightcrew station and be provided with automatic activation. The cockpit control device must have ''on,'' ''off,'' and ''armed'' positions so that, when armed in the cockpit, the lights will operate by automatic activation.

(d) There must be a means to safeguard against inadvertent operation of the cockpit control device from the ''armed'' or ''on'' positions.

(e) The cockpit control device must have provisions to allow the emergency lighting system to be armed or activated at any time that it may be needed.

(f) When armed, the emergency lighting system must activate and remain lighted when—

(1) The normal electrical power of the airplane is lost; or

(2) The airplane is subjected to an impact that results in a deceleration in excess of 2g and a velocity change in excess of 3.5 feet-per-second, acting along the longitudinal axis of the airplane; or

(3) Any other emergency condition exists where automatic activation of the emergency lighting is necessary to aid with occupant evacuation.

(g) The emergency lighting system must be capable of being turned off and reset by the flightcrew after automatic activation.

(h) The emergency lighting system must provide internal lighting, including—

(1) Illuminated emergency exit marking and locating signs, including those required in § 23.811(b);

(2) Sources of general illumination in the cabin that provide an average illumination of not less than 0.05 foot-candle and an illumination at any point of not less than 0.01 foot-candle when measured along the center line of the main passenger aisle(s) and at the seat armrest height; and

(3) Floor proximity emergency escape path marking that provides emergency

evacuation guidance for the airplane occupants when all sources of illumination more than 4 feet above the cabin aisle floor are totally obscured.

(i) The energy supply to each emergency lighting unit must provide the required level of illumination for at least 10 minutes at the critical ambient conditions after activation of the emergency lighting system.

(j) If rechargeable batteries are used as the energy supply for the emergency lighting system, they may be recharged from the main electrical power system of the airplane provided the charging circuit is designed to preclude inadvertent battery discharge into the charging circuit faults. If the emergency lighting system does not include a charging circuit, battery condition monitors are required.

(k) Components of the emergency lighting system, including batteries, wiring, relays, lamps, and switches, must be capable of normal operation after being subjected to the inertia forces resulting from the ultimate load factors prescribed in §23.561(b)(2).

(l) The emergency lighting system must be designed so that after any single transverse vertical separation of the fuselage during a crash landing:

(1) At least 75 percent of all electrically illuminated emergency lights required by this section remain operative; and

(2) Each electrically illuminated exit sign required by §23.811 (b) and (c) remains operative, except those that are directly damaged by the fuselage separation.

[Doc. No. 26324, 59 FR 25774, May 17, 1994]

### §23.813 Emergency exit access.

(a) For commuter category airplanes, access to window-type emergency exits may not be obstructed by seats or seat backs.

(b) In addition, when certification to the emergency exit provisions of §23.807(d)(4) is requested, the following emergency exit access must be provided:

(1) The passageway leading from the aisle to the passenger entry door must be unobstructed and at least 20 inches wide.

(2) There must be enough space next to the passenger entry door to allow assistance in evacuation of passengers without reducing the unobstructed width of the passageway below 20 inches.

(3) If it is necessary to pass through a passageway between passenger compartments to reach a required emergency exit from any seat in the passenger cabin, the passageway must be unobstructed; however, curtains may be used if they allow free entry through the passageway.

(4) No door may be installed in any partition between passenger compartments unless that door has a means to latch it in the open position. The latching means must be able to withstand the loads imposed upon it by the door when the door is subjected to the inertia loads resulting from the ultimate static load factors prescribed in §23.561(b)(2).

(5) If it is necessary to pass through a doorway separating the passenger cabin from other areas to reach a required emergency exit from any passenger seat, the door must have a means to latch it in the open position. The latching means must be able to withstand the loads imposed upon it by the door when the door is subjected to the inertia loads resulting from the ultimate static load factors prescribed in §23.561(b)(2).

[Amdt. 23–36, 53 FR 30815, Aug. 15, 1988, as amended by Amdt. 23–46, 59 FR 25774, May 17, 1994]

### §23.815 Width of aisle.

(a) Except as provided in paragraph (b) of this section, for commuter category airplanes, the width of the main passenger aisle at any point between seats must equal or exceed the values in the following table:

| Number of passenger seats | Minimum main passenger aisle width | |
|---|---|---|
| | Less than 25 inches from floor | 25 inches and more from floor |
| 10 through 19 ..... | 9 inches ..... | 15 inches. |

(b) When certification to the emergency exist provisions of §23.807(d)(4) is requested, the main passenger aisle width at any point between the seats must equal or exceed the following values:

| Number of passenger seats | Minimum main passenger aisle width (inches) | |
|---|---|---|
| | Less than 25 inches from floor | 25 inches and more from floor |
| 10 or fewer | [1] 12 | 15 |
| 11 through 19 | 12 | 20 |

[1] A narrower width not less than 9 inches may be approved when substantiated by tests found necessary by the Administrator.

[Amdt. 23–34, 52 FR 1831, Jan. 15, 1987, as amended by Amdt. 23–46, 59 FR 25774, May 17, 1994]

### § 23.831 Ventilation.

(a) Each passenger and crew compartment must be suitably ventilated. Carbon monoxide concentration may not exceed one part in 20,000 parts of air.

(b) For pressurized airplanes, the ventilating air in the flightcrew and passenger compartments must be free of harmful or hazardous concentrations of gases and vapors in normal operations and in the event of reasonably probable failures or malfunctioning of the ventilating, heating, pressurization, or other systems and equipment. If accumulation of hazardous quantities of smoke in the cockpit area is reasonably probable, smoke evacuation must be readily accomplished starting with full pressurization and without depressurizing beyond safe limits.

[Doc. No. 4080, 29 FR 17955, Dec. 18, 1964; 30 FR 258, Jan. 9, 1965, as amended by Amdt. 23–34, 52 FR 1831, Jan. 15, 1987; Amdt. 23–42, 56 FR 354, Jan. 3, 1991]

## PRESSURIZATION

### § 23.841 Pressurized cabins.

(a) If certification for operation over 25,000 feet is requested, the airplane must be able to maintain a cabin pressure altitude of not more than 15,000 feet in event of any probable failure or malfunction in the pressurization system.

(b) Pressurized cabins must have at least the following valves, controls, and indicators, for controlling cabin pressure:

(1) Two pressure relief valves to automatically limit the positive pressure differential to a predetermined value at the maximum rate of flow delivered by the pressure source. The combined capacity of the relief valves must be large enough so that the failure of any one valve would not cause an appreciable rise in the pressure differential. The pressure differential is positive when the internal pressure is greater than the external.

(2) Two reverse pressure differential relief valves (or their equivalent) to automatically prevent a negative pressure differential that would damage the structure. However, one valve is enough if it is of a design that reasonably precludes its malfunctioning.

(3) A means by which the pressure differential can be rapidly equalized.

(4) An automatic or manual regulator for controlling the intake or exhaust airflow, or both, for maintaining the required internal pressures and airflow rates.

(5) Instruments to indicate to the pilot the pressure differential, the cabin pressure altitude, and the rate of change of cabin pressure altitude.

(6) Warning indication at the pilot station to indicate when the safe or preset pressure differential is exceeded and when a cabin pressure altitude of 10,000 feet is exceeded.

(7) A warning placard for the pilot if the structure is not designed for pressure differentials up to the maximum relief valve setting in combination with landing loads.

(8) A means to stop rotation of the compressor or to divert airflow from the cabin if continued rotation of an engine-driven cabin compressor or continued flow of any compressor bleed air will create a hazard if a malfunction occurs.

[Amdt. 23–14, 38 FR 31822, Nov. 19, 1973, as amended by Amdt. 23–17, 41 FR 55464, Dec. 20, 1976; Amdt. 23–49, 61 FR 5167, Feb. 9, 1996]

### § 23.843 Pressurization tests.

(a) *Strength test.* The complete pressurized cabin, including doors, windows, canopy, and valves, must be tested as a pressure vessel for the pressure differential specified in § 23.365(d).

(b) *Functional tests.* The following functional tests must be performed:

(1) Tests of the functioning and capacity of the positive and negative pressure differential valves, and of the emergency release valve, to simulate the effects of closed regulator valves.

(2) Tests of the pressurization system to show proper functioning under each possible condition of pressure, temperature, and moisture, up to the maximum altitude for which certification is requested.

(3) Flight tests, to show the performance of the pressure supply, pressure and flow regulators, indicators, and warning signals, in steady and stepped climbs and descents at rates corresponding to the maximum attainable within the operating limitations of the airplane, up to the maximum altitude for which certification is requested.

(4) Tests of each door and emergency exit, to show that they operate properly after being subjected to the flight tests prescribed in paragraph (b)(3) of this section.

FIRE PROTECTION

### §23.851 Fire extinguishers.

(a) There must be at least one hand fire extinguisher for use in the pilot compartment that is located within easy access of the pilot while seated.

(b) There must be at least one hand fire extinguisher located conveniently in the passenger compartment—

(1) Of each airplane accommodating more than 6 passengers; and

(2) Of each commuter category airplane.

(c) For hand fire extinguishers, the following apply:

(1) The type and quantity of each extinguishing agent used must be appropriate to the kinds of fire likely to occur where that agent is to be used.

(2) Each extinguisher for use in a personnel compartment must be designed to minimize the hazard of toxic gas concentrations.

[Doc. No. 26269, 58 FR 42165, Aug. 6, 1993]

### §23.853 Passenger and crew compartment interiors.

For each compartment to be used by the crew or passengers:

(a) The materials must be at least flame-resistant;

(b) [Reserved]

(c) If smoking is to be prohibited, there must be a placard so stating, and if smoking is to be allowed—

(1) There must be an adequate number of self-contained, removable ashtrays; and

(2) Where the crew compartment is separated from the passenger compartment, there must be at least one illuminated sign (using either letters or symbols) notifying all passengers when smoking is prohibited. Signs which notify when smoking is prohibited must—

(i) When illuminated, be legible to each passenger seated in the passenger cabin under all probable lighting conditions; and

(ii) Be so constructed that the crew can turn the illumination on and off; and

(d) In addition, for commuter category airplanes the following requirements apply:

(1) Each disposal receptacle for towels, paper, or waste must be fully enclosed and constructed of at least fire resistant materials and must contain fires likely to occur in it under normal use. The ability of the disposal receptacle to contain those fires under all probable conditions of wear, misalignment, and ventilation expected in service must be demonstrated by test. A placard containing the legible words ''No Cigarette Disposal'' must be located on or near each disposal receptacle door.

(2) Lavatories must have ''No Smoking'' or ''No Smoking in Lavatory'' placards located conspicuously on each side of the entry door and self-contained, removable ashtrays located conspicuously on or near the entry side of each lavatory door, except that one ashtray may serve more than one lavatory door if it can be seen from the cabin side of each lavatory door served. The placards must have red letters at least ½ inch high on a white background at least 1 inch high (a ''No Smoking'' symbol may be included on the placard).

(3) Materials (including finishes or decorative surfaces applied to the materials) used in each compartment occupied by the crew or passengers must meet the following test criteria as applicable:

(i) Interior ceiling panels, interior wall panels, partitions, galley structure, large cabinet walls, structural

flooring, and materials used in the construction of stowage compartments (other than underseat stowage compartments and compartments for stowing small items such as magazines and maps) must be self-extinguishing when tested vertically in accordance with the applicable portions of appendix F of this part or by other equivalent methods. The average burn length may not exceed 6 inches and the average flame time after removal of the flame source may not exceed 15 seconds. Drippings from the test specimen may not continue to flame for more than an average of 3 seconds after falling.

(ii) Floor covering, textiles (including draperies and upholstery), seat cushions, padding, decorative and nondecorative coated fabrics, leather, trays and galley furnishings, electrical conduit, thermal and acoustical insulation and insulation covering, air ducting, joint and edge covering, cargo compartment liners, insulation blankets, cargo covers and transparencies, molded and thermoformed parts, air ducting joints, and trim strips (decorative and chafing), that are constructed of materials not covered in paragraph (d)(3)(iv) of this section must be self extinguishing when tested vertically in accordance with the applicable portions of appendix F of this part or other approved equivalent methods. The average burn length may not exceed 8 inches and the average flame time after removal of the flame source may not exceed 15 seconds. Drippings from the test specimen may not continue to flame for more than an average of 5 seconds after falling.

(iii) Motion picture film must be safety film meeting the Standard Specifications for Safety Photographic Film PH1.25 (available from the American National Standards Institute, 1430 Broadway, New York, N.Y. 10018) or an FAA approved equivalent. If the film travels through ducts, the ducts must meet the requirements of paragraph (d)(3)(ii) of this section.

(iv) Acrylic windows and signs, parts constructed in whole or in part of elastomeric materials, edge-lighted instrument assemblies consisting of two or more instruments in a common housing, seatbelts, shoulder harnesses, and cargo and baggage tiedown equipment, including containers, bins, pallets, etc., used in passenger or crew compartments, may not have an average burn rate greater than 2.5 inches per minute when tested horizontally in accordance with the applicable portions of appendix F of this part or by other approved equivalent methods.

(v) Except for electrical wire cable insulation, and for small parts (such as knobs, handles, rollers, fasteners, clips, grommets, rub strips, pulleys, and small electrical parts) that the Administrator finds would not contribute significantly to the propagation of a fire, materials in items not specified in paragraphs (d)(3)(i), (ii), (iii), or (iv) of this section may not have a burn rate greater than 4.0 inches per minute when tested horizontally in accordance with the applicable portions of appendix F of this part or by other approved equivalent methods.

(e) Lines, tanks, or equipment containing fuel, oil, or other flammable fluids may not be installed in such compartments unless adequately shielded, isolated, or otherwise protected so that any breakage or failure of such an item would not create a hazard.

(f) Airplane materials located on the cabin side of the firewall must be self-extinguishing or be located at such a distance from the firewall, or otherwise protected, so that ignition will not occur if the firewall is subjected to a flame temperature of not less than 2,000 degrees F for 15 minutes. For self-extinguishing materials (except electrical wire and cable insulation and small parts that the Administrator finds would not contribute significantly to the propagation of a fire), a vertifical self-extinguishing test must be conducted in accordance with appendix F of this part or an equivalent method approved by the Administrator. The average burn length of the material may not exceed 6 inches and the average flame time after removal of the flame source may not exceed 15 seconds. Drippings from the material test specimen may not continue to

flame for more than an average of 3 seconds after falling.

[Amdt. 23–14, 23 FR 31822, Nov. 19, 1973, as amended by Amdt. 23–23, 43 FR 50593, Oct. 30, 1978; Amdt. 23–25, 45 FR 7755, Feb. 4, 1980; Amdt. 23–34, 52 FR 1831, Jan. 15, 1987]

### §23.855 Cargo and baggage compartment fire protection.

(a) Sources of heat within each cargo and baggage compartment that are capable of igniting the compartment contents must be shielded and insulated to prevent such ignition.

(b) Each cargo and baggage compartment must be constructed of materials that meet the appropriate provisions of §23.853(d)(3).

(c) In addition, for commuter category airplanes, each cargo and baggage compartment must:

(1) Be located where the presence of a fire would be easily discovered by the pilots when seated at their duty station, or it must be equipped with a smoke or fire detector system to give a warning at the pilots' station, and provide sufficient access to enable a pilot to effectively reach any part of the compartment with the contents of a hand held fire extinguisher, or

(2) Be equipped with a smoke or fire detector system to give a warning at the pilots' station and have ceiling and sidewall liners and floor panels constructed of materials that have been subjected to and meet the 45 degree angle test of appendix F of this part. The flame may not penetrate (pass through) the material during application of the flame or subsequent to its removal. The average flame time after removal of the flame source may not exceed 15 seconds, and the average glow time may not exceed 10 seconds. The compartment must be constructed to provide fire protection that is not less than that required of its individual panels; or

(3) Be constructed and sealed to contain any fire within the compartment.

[Doc. No. 27806, 61 FR 5167, Feb. 9, 1996]

### §23.859 Combustion heater fire protection.

(a) *Combustion heater fire regions.* The following combustion heater fire regions must be protected from fire in accordance with the applicable provisions of §§23.1182 through 23.1191 and 23.1203:

(1) The region surrounding the heater, if this region contains any flammable fluid system components (excluding the heater fuel system) that could—

(i) Be damaged by heater malfunctioning; or

(ii) Allow flammable fluids or vapors to reach the heater in case of leakage.

(2) The region surrounding the heater, if the heater fuel system has fittings that, if they leaked, would allow fuel vapor to enter this region.

(3) The part of the ventilating air passage that surrounds the combustion chamber.

(b) *Ventilating air ducts.* Each ventilating air duct passing through any fire region must be fireproof. In addition—

(1) Unless isolation is provided by fireproof valves or by equally effective means, the ventilating air duct downstream of each heater must be fireproof for a distance great enough to ensure that any fire originating in the heater can be contained in the duct; and

(2) Each part of any ventilating duct passing through any region having a flammable fluid system must be constructed or isolated from that system so that the malfunctioning of any component of that system cannot introduce flammable fluids or vapors into the ventilating airstream.

(c) *Combustion air ducts.* Each combustion air duct must be fireproof for a distance great enough to prevent damage from backfiring or reverse flame propagation. In addition—

(1) No combustion air duct may have a common opening with the ventilating airstream unless flames from backfires or reverse burning cannot enter the ventilating airstream under any operating condition, including reverse flow or malfunctioning of the heater or its associated components; and

(2) No combustion air duct may restrict the prompt relief of any backfire that, if so restricted, could cause heater failure.

(d) *Heater controls: general.* Provision must be made to prevent the hazardous accumulation of water or ice on or in any heater control component, control system tubing, or safety control.

(e) *Heater safety controls.* (1) Each combustion heater must have the following safety controls:

(i) Means independent of the components for the normal continuous control of air temperature, airflow, and fuel flow must be provided to automatically shut off the ignition and fuel supply to that heater at a point remote from that heater when any of the following occurs:

(A) The heater exchanger temperature exceeds safe limits.

(B) The ventilating air temperature exceeds safe limits.

(C) The combustion airflow becomes inadequate for safe operation.

(D) The ventilating airflow becomes inadequate for safe operation.

(ii) Means to warn the crew when any heater whose heat output is essential for safe operation has been shut off by the automatic means prescribed in paragraph (e)(1)(i) of this section.

(2) The means for complying with paragraph (e)(1)(i) of this section for any individual heater must—

(i) Be independent of components serving any other heater whose heat output is essential for safe operations; and

(ii) Keep the heater off until restarted by the crew.

(f) *Air intakes.* Each combustion and ventilating air intake must be located so that no flammable fluids or vapors can enter the heater system under any operating condition—

(1) During normal operation; or

(2) As a result of the malfunctioning of any other component.

(g) *Heater exhaust.* Heater exhaust systems must meet the provisions of §§ 23.1121 and 23.1123. In addition, there must be provisions in the design of the heater exhaust system to safely expel the products of combustion to prevent the occurrence of—

(1) Fuel leakage from the exhaust to surrounding compartments;

(2) Exhaust gas impingement on surrounding equipment or structure;

(3) Ignition of flammable fluids by the exhaust, if the exhaust is in a compartment containing flammable fluid lines; and

(4) Restrictions in the exhaust system to relieve backfires that, if so restricted, could cause heater failure.

(h) *Heater fuel systems.* Each heater fuel system must meet each powerplant fuel system requirement affecting safe heater operation. Each heater fuel system component within the ventilating airstream must be protected by shrouds so that no leakage from those components can enter the ventilating airstream.

(i) *Drains.* There must be means to safely drain fuel that might accumulate within the combustion chamber or the heater exchanger. In addition—

(1) Each part of any drain that operates at high temperatures must be protected in the same manner as heater exhausts; and

(2) Each drain must be protected from hazardous ice accumulation under any operating condition.

[Amdt. 23–27, 45 FR 70387, Oct. 23, 1980]

**§ 23.863 Flammable fluid fire protection.**

(a) In each area where flammable fluids or vapors might escape by leakage of a fluid system, there must be means to minimize the probability of ignition of the fluids and vapors, and the resultant hazard if ignition does occur.

(b) Compliance with paragraph (a) of this section must be shown by analysis or tests, and the following factors must be considered:

(1) Possible sources and paths of fluid leakage, and means of detecting leakage.

(2) Flammability characteristics of fluids, including effects of any combustible or absorbing materials.

(3) Possible ignition sources, including electrical faults, overheating of equipment, and malfunctioning of protective devices.

(4) Means available for controlling or extinguishing a fire, such as stopping flow of fluids, shutting down equipment, fireproof containment, or use of extinguishing agents.

(5) Ability of airplane components that are critical to safety of flight to withstand fire and heat.

(c) If action by the flight crew is required to prevent or counteract a fluid fire (e.g. equipment shutdown or actuation of a fire extinguisher), quick acting means must be provided to alert the crew.

(d) Each area where flammable fluids or vapors might escape by leakage of a fluid system must be identified and defined.

[Amdt. 23–23, 43 FR 50593, Oct. 30, 1978]

### §23.865 Fire protection of flight controls, engine mounts, and other flight structure.

Flight controls, engine mounts, and other flight structure located in designated fire zones, or in adjacent areas that would be subjected to the effects of fire in the designated fire zones, must be constructed of fireproof material or be shielded so that they are capable of withstanding the effects of a fire. Engine vibration isolators must incorporate suitable features to ensure that the engine is retained if the nonfireproof portions of the isolators deteriorate from the effects of a fire.

[Doc. No. 27805, 61 FR 5148, Feb. 9, 1996]

ELECTRICAL BONDING AND LIGHTNING PROTECTION

### §23.867 Electrical bonding and protection against lightning and static electricity.

(a) The airplane must be protected against catastrophic effects from lightning.

(b) For metallic components, compliance with paragraph (a) of this section may be shown by—

(1) Bonding the components properly to the airframe; or

(2) Designing the components so that a strike will not endanger the airplane.

(c) For nonmetallic components, compliance with paragraph (a) of this section may be shown by—

(1) Designing the components to minimize the effect of a strike; or

(2) Incorporating acceptable means of diverting the resulting electrical current so as not to endanger the airplane.

[Amdt. 23–7, 34 FR 13092, Aug. 13, 1969]

MISCELLANEOUS

### §23.871 Leveling means.

There must be means for determining when the airplane is in a level position on the ground.

[Amdt. 23–7, 34 FR 13092, Aug. 13, 1969]

## Subpart E—Powerplant

GENERAL

### §23.901 Installation.

(a) For the purpose of this part, the airplane powerplant installation includes each component that—

(1) Is necessary for propulsion; and

(2) Affects the safety of the major propulsive units.

(b) Each powerplant installation must be constructed and arranged to—

(1) Ensure safe operation to the maximum altitude for which approval is requested.

(2) Be accessible for necessary inspections and maintenance.

(c) Engine cowls and nacelles must be easily removable or openable by the pilot to provide adequate access to and exposure of the engine compartment for preflight checks.

(d) Each turbine engine installation must be constructed and arranged to—

(1) Result in carcass vibration characteristics that do not exceed those established during the type certification of the engine.

(2) Provide continued safe operation without a hazardous loss of power or thrust while being operated in rain for at least three minutes with the rate of water ingestion being not less than four percent, by weight, of the engine induction airflow rate at the maximum installed power or thrust approved for takeoff and at flight idle.

(e) The installation must comply with—

(1) The instructions provided under the engine type certificate and the propeller type certificate.

(2) The applicable provisions of this subpart.

(f) Each auxiliary power unit installation must meet the applicable portions of this part.

[Doc. No. 4080, 29 FR 17955, Dec. 18, 1964, as amended by Amdt. 23–7, 34 FR 13092, Aug. 13, 1969; Amdt. 23–18, 42 FR 15041, Mar. 17, 1977; Amdt. 23–29, 49 FR 6846, Feb. 23, 1984; Amdt. 23–34, 52 FR 1832, Jan. 15, 1987; Amdt. 23–34, 52 FR 34745, Sept. 14, 1987; Amdt. 23–43, 58 FR 18970, Apr. 9, 1993; Amdt. 23–51, 61 FR 5136, Feb. 9, 1996]

**§ 23.903 Engines.**

(a) *Engine type certificate.* (1) Each engine must have a type certificate and must meet the applicable requirements of part 34 of this chapter.

(2) Each turbine engine must either—

(i) Comply with § 33.77 of this chapter in effect on October 31, 1974, or as later amended; or

(ii) Be shown to have a foreign object ingestion service history in similar installation locations which has not resulted in any unsafe condition.

(b) *Turbine engine installations.* For turbine engine installations—

(1) Design precautions must be taken to minimize the hazards to the airplane in the event of an engine rotor failure or of a fire originating inside the engine which burns through the engine case.

(2) The powerplant systems associated with engine control devices, systems, and instrumentation must be designed to give reasonable assurance that those operating limitations that adversely affect turbine rotor structural integrity will not be exceeded in service.

(c) *Engine isolation.* The powerplants must be arranged and isolated from each other to allow operation, in at least one configuration, so that the failure or malfunction of any engine, or the failure or malfunction (including destruction by fire in the engine compartment) of any system that can affect an engine (other than a fuel tank if only one fuel tank is installed), will not:

(1) Prevent the continued safe operation of the remaining engines; or

(2) Require immediate action by any crewmember for continued safe operation of the remaining engines.

(d) *Starting and stopping (piston engine).* (1) The design of the installation must be such that risk of fire or mechanical damage to the engine or airplane, as a result of starting the engine in any conditions in which starting is to be permitted, is reduced to a minimum. Any techniques and associated limitations for engine starting must be established and included in the Airplane Flight Manual, approved manual material, or applicable operating placards. Means must be provided for—

(i) Restarting any engine of a multiengine airplane in flight, and

(ii) Stopping any engine in flight, after engine failure, if continued engine rotation would cause a hazard to the airplane.

(2) In addition, for commuter category airplanes, the following apply:

(i) Each component of the stopping system on the engine side of the firewall that might be exposed to fire must be at least fire resistant.

(ii) If hydraulic propeller feathering systems are used for this purpose, the feathering lines must be at least fire resistant under the operating conditions that may be expected to exist during feathering.

(e) *Starting and stopping (turbine engine).* Turbine engine installations must comply with the following:

(1) The design of the installation must be such that risk of fire or mechanical damage to the engine or the airplane, as a result of starting the engine in any conditions in which starting is to be permitted, is reduced to a minimum. Any techniques and associated limitations must be established and included in the Airplane Flight Manual, approved manual material, or applicable operating placards.

(2) There must be means for stopping combustion within any engine and for stopping the rotation of any engine if continued rotation would cause a hazard to the airplane. Each component of the engine stopping system located in any fire zone must be fire resistant. If hydraulic propeller feathering systems are used for stopping the engine, the hydraulic feathering lines or hoses must be fire resistant.

(3) It must be possible to restart an engine in flight. Any techniques and associated limitations must be established and included in the Airplane Flight Manual, approved manual material, or applicable operating placards.

(4) It must be demonstrated in flight that when restarting engines following a false start, all fuel or vapor is discharged in such a way that it does not constitute a fire hazard.

(f) *Restart envelope.* An altitude and airspeed envelope must be established for the airplane for in-flight engine restarting and each installed engine

must have a restart capability within that envelope.

(g) *Restart capability*. For turbine engine powered airplanes, if the minimum windmilling speed of the engines, following the in-flight shutdown of all engines, is insufficient to provide the necessary electrical power for engine ignition, a power source independent of the engine-driven electrical power generating system must be provided to permit in-flight engine ignition for restarting.

[Amdt. 23–14, 38 FR 31822, Nov. 19, 1973, as amended by Amdt. 23–17, 41 FR 55464, Dec. 20, 1976; Amdt. 23–26, 45 FR 60171, Sept. 11, 1980; Amdt. 23–29, 49 FR 6847, Feb. 23, 1984; Amdt. 23–34, 52 FR 1832, Jan. 15, 1987; Amdt. 23–40, 55 FR 32861, Aug. 10, 1990; Amdt. 23–43, 58 FR 18970, Apr. 9, 1993; Amdt. 23–51, 61 FR 5136, Feb. 9, 1996]

### §23.904 Automatic power reserve system.

If installed, an automatic power reserve (APR) system that automatically advances the power or thrust on the operating engine(s), when any engine fails during takeoff, must comply with appendix H of this part.

[Doc. No. 26344, 58 FR 18970, Apr. 9, 1993]

### §23.905 Propellers.

(a) Each propeller must have a type certificate.

(b) Engine power and propeller shaft rotational speed may not exceed the limits for which the propeller is certificated.

(c) Each featherable propeller must have a means to unfeather it in flight.

(d) Each component of the propeller blade pitch control system must meet the requirements of §35.42 of this chapter.

(e) All areas of the airplane forward of the pusher propeller that are likely to accumulate and shed ice into the propeller disc during any operating condition must be suitably protected to prevent ice formation, or it must be shown that any ice shed into the propeller disc will not create a hazardous condition.

(f) Each pusher propeller must be marked so that the disc is conspicuous under normal daylight ground conditions.

(g) If the engine exhaust gases are discharged into the pusher propeller disc, it must be shown by tests, or analysis supported by tests, that the propeller is capable of continuous safe operation.

(h) All engine cowling, access doors, and other removable items must be designed to ensure that they will not separate from the airplane and contact the pusher propeller.

[Doc. No. 4080, 29 FR 17955, Dec. 18, 1964, as amended by Amdt. 23–26, 45 FR 60171, Sept. 11, 1980; Amdt. 23–29, 49 FR 6847, Feb. 23, 1984; Amdt. 23–43, 58 FR 18970, Apr. 9, 1993]

### §23.907 Propeller vibration.

(a) Each propeller other than a conventional fixed-pitch wooden propeller must be shown to have vibration stresses, in normal operating conditions, that do not exceed values that have been shown by the propeller manufacturer to be safe for continuous operation. This must be shown by—

(1) Measurement of stresses through direct testing of the propeller;

(2) Comparison with similar installations for which these measurements have been made; or

(3) Any other acceptable test method or service experience that proves the safety of the installation.

(b) Proof of safe vibration characteristics for any type of propeller, except for conventional, fixed-pitch, wood propellers must be shown where necessary.

[Doc. No. 4080, 29 FR 17955, Dec. 18, 1964; 30 FR 258, Jan. 9, 1965, as amended by Amdt. 23–51, 61 FR 5136, Feb. 9, 1996]

### §23.909 Turbocharger systems.

(a) Each turbocharger must be approved under the engine type certificate or it must be shown that the turbocharger system, while in its normal engine installation and operating in the engine environment—

(1) Can withstand, without defect, an endurance test of 150 hours that meets the applicable requirements of §33.49 of this subchapter; and

(2) Will have no adverse effect upon the engine.

(b) Control system malfunctions, vibrations, and abnormal speeds and temperatures expected in service may not damage the turbocharger compressor or turbine.

(c) Each turbocharger case must be able to contain fragments of a compressor or turbine that fails at the highest speed that is obtainable with normal speed control devices inoperative.

(d) Each intercooler installation, where provided, must comply with the following—

(1) The mounting provisions of the intercooler must be designed to withstand the loads imposed on the system;

(2) It must be shown that, under the installed vibration environment, the intercooler will not fail in a manner allowing portions of the intercooler to be ingested by the engine; and

(3) Airflow through the intercooler must not discharge directly on any airplane component (e.g., windshield) unless such discharge is shown to cause no hazard to the airplane under all operating conditions.

(e) Engine power, cooling characteristics, operating limits, and procedures affected by the turbocharger system installations must be evaluated. Turbocharger operating procedures and limitations must be included in the Airplane Flight Manual in accordance with § 23.1581.

[Amdt. 23–7, 34 FR 13092, Aug. 13, 1969, as amended by Amdt. 23–43, 58 FR 18970, Apr. 9, 1993]

### § 23.925 Propeller clearance.

Unless smaller clearances are substantiated, propeller clearances, with the airplane at the most adverse combination of weight and center of gravity, and with the propeller in the most adverse pitch position, may not be less than the following:

(a) *Ground clearance.* There must be a clearance of at least seven inches (for each airplane with nose wheel landing gear) or nine inches (for each airplane with tail wheel landing gear) between each propeller and the ground with the landing gear statically deflected and in the level, normal takeoff, or taxing attitude, whichever is most critical. In addition, for each airplane with conventional landing gear struts using fluid or mechanical means for absorbing landing shocks, there must be positive clearance between the propeller and the ground in the level takeoff attitude with the critical tire completely deflated and the corresponding landing gear strut bottomed. Positive clearance for airplanes using leaf spring struts is shown with a deflection corresponding to 1.5*g*.

(b) *Aft-mounted propellers.* In addition to the clearances specified in paragraph (a) of this section, an airplane with an aft mounted propeller must be designed such that the propeller will not contact the runway surface when the airplane is in the maximum pitch attitude attainable during normal takeoffs and landings.

(c) *Water clearance.* There must be a clearance of at least 18 inches between each propeller and the water, unless compliance with § 23.239 can be shown with a lesser clearance.

(d) *Structural clearance.* There must be—

(1) At least one inch radial clearance between the blade tips and the airplane structure, plus any additional radial clearance necessary to prevent harmful vibration;

(2) At least one-half inch longitudinal clearance between the propeller blades or cuffs and stationary parts of the airplane; and

(3) Positive clearance between other rotating parts of the propeller or spinner and stationary parts of the airplane.

[Doc. No. 4080, 29 FR 17955, Dec. 18, 1964, as amended by Amdt. 23–43, 58 FR 18971, Apr. 9, 1993; Amdt. 23–51, 61 FR 5136, Feb. 9, 1996; Amdt. 23–48, 61 FR 5148, Feb. 9, 1996]

### § 23.929 Engine installation ice protection.

Propellers (except wooden propellers) and other components of complete engine installations must be protected against the accumulation of ice as necessary to enable satisfactory functioning without appreciable loss of thrust when operated in the icing conditions for which certification is requested.

[Amdt. 23–14, 33 FR 31822, Nov. 19, 1973, as amended by Amdt. 23–51, 61 FR 5136, Feb. 9, 1996]

### § 23.933 Reversing systems.

(a) *For turbojet and turbofan reversing systems.* (1) Each system intended for ground operation only must be designed so that, during any reversal in flight, the engine will produce no more

than flight idle thrust. In addition, it must be shown by analysis or test, or both, that—

(i) Each operable reverser can be restored to the forward thrust position; or

(ii) The airplane is capable of continued safe flight and landing under any possible position of the thrust reverser.

(2) Each system intended for in-flight use must be designed so that no unsafe condition will result during normal operation of the system, or from any failure, or likely combination of failures, of the reversing system under any operating condition including ground operation. Failure of structural elements need not be considered if the probability of this type of failure is extremely remote.

(3) Each system must have a means to prevent the engine from producing more than idle thrust when the reversing system malfunctions; except that it may produce any greater thrust that is shown to allow directional control to be maintained, with aerodynamic means alone, under the most critical reversing condition expected in operation.

(b) *For propeller reversing systems.* (1) Each system must be designed so that no single failure, likely combination of failures or malfunction of the system will result in unwanted reverse thrust under any operating condition. Failure of structural elements need not be considered if the probability of this type of failure is extremely remote.

(2) Compliance with paragraph (b)(1) of this section must be shown by failure analysis, or testing, or both, for propeller systems that allow the propeller blades to move from the flight low-pitch position to a position that is substantially less than the normal flight, low-pitch position. The analysis may include or be supported by the analysis made to show compliance with §35.21 for the type certification of the propeller and associated installation components. Credit will be given for pertinent analysis and testing completed by the engine and propeller manufacturers.

[Doc. No. 26344, 58 FR 18971, Apr. 9, 1993, as amended by Amdt. 23–51, 61 FR 5136, Feb. 9, 1996]

### §23.934 Turbojet and turbofan engine thrust reverser systems tests.

Thrust reverser systems of turbojet or turbofan engines must meet the requirements of §33.97 of this chapter or it must be demonstrated by tests that engine operation and vibratory levels are not affected.

[Doc. No. 26344, 58 FR 18971, Apr. 9, 1993]

### §23.937 Turbopropeller-drag limiting systems.

(a) Turbopropeller-powered airplane propeller-drag limiting systems must be designed so that no single failure or malfunction of any of the systems during normal or emergency operation results in propeller drag in excess of that for which the airplane was designed under the structural requirements of this part. Failure of structural elements of the drag limiting systems need not be considered if the probability of this kind of failure is extremely remote.

(b) As used in this section, drag limiting systems include manual or automatic devices that, when actuated after engine power loss, can move the propeller blades toward the feather position to reduce windmilling drag to a safe level.

[Amdt. 23–7, 34 FR 13093, Aug. 13, 1969, as amended by Amdt. 23–43, 58 FR 18971, Apr. 9, 1993]

### §23.939 Powerplant operating characteristics.

(a) Turbine engine powerplant operating characteristics must be investigated in flight to determine that no adverse characteristics (such as stall, surge, or flameout) are present, to a hazardous degree, during normal and emergency operation within the range of operating limitations of the airplane and of the engine.

(b) Turbocharged reciprocating engine operating characteristics must be investigated in flight to assure that no adverse characteristics, as a result of an inadvertent overboost, surge, flooding, or vapor lock, are present during normal or emergency operation of the engine(s) throughout the range of operating limitations of both airplane and engine.

(c) For turbine engines, the air inlet system must not, as a result of airflow distortion during normal operation, cause vibration harmful to the engine.

[Amdt. 23–7, 34 FR 13093 Aug. 13, 1969, as amended by Amdt. 23–14, 38 FR 31823, Nov. 19, 1973; Amdt. 23–18, 42 FR 15041, Mar. 17, 1977; Amdt. 23–42, 56 FR 354, Jan. 3, 1991]

### § 23.943 Negative acceleration.

No hazardous malfunction of an engine, an auxiliary power unit approved for use in flight, or any component or system associated with the powerplant or auxiliary power unit may occur when the airplane is operated at the negative accelerations within the flight envelopes prescribed in § 23.333. This must be shown for the greatest value and duration of the acceleration expected in service.

[Amdt. 23–18, 42 FR 15041, Mar. 17, 1977, as amended by Amdt. 23–43, 58 FR 18971, Apr. 9, 1993]

## FUEL SYSTEM

### § 23.951 General.

(a) Each fuel system must be constructed and arranged to ensure fuel flow at a rate and pressure established for proper engine and auxiliary power unit functioning under each likely operating condition, including any maneuver for which certification is requested and during which the engine or auxiliary power unit is permitted to be in operation.

(b) Each fuel system must be arranged so that—

(1) No fuel pump can draw fuel from more than one tank at a time; or

(2) There are means to prevent introducing air into the system.

(c) Each fuel system for a turbine engine must be capable of sustained operation throughout its flow and pressure range with fuel initially saturated with water at 80° F and having 0.75cc of free water per gallon added and cooled to the most critical condition for icing likely to be encountered in operation.

(d) Each fuel system for a turbine engine powered airplane must meet the applicable fuel venting requirements of part 34 of this chapter.

[Amdt. 23–15, 39 FR 35459, Oct. 1, 1974, as amended by Amdt. 23–40, 55 FR 32861, Aug. 10, 1990; Amdt. 23–43, 58 FR 18971, Apr. 9, 1993]

### § 23.953 Fuel system independence.

(a) Each fuel system for a multiengine airplane must be arranged so that, in at least one system configuration, the failure of any one component (other than a fuel tank) will not result in the loss of power of more than one engine or require immediate action by the pilot to prevent the loss of power of more than one engine.

(b) If a single fuel tank (or series of fuel tanks interconnected to function as a single fuel tank) is used on a multiengine airplane, the following must be provided:

(1) Independent tank outlets for each engine, each incorporating a shut-off valve at the tank. This shutoff valve may also serve as the fire wall shutoff valve required if the line between the valve and the engine compartment does not contain more than one quart of fuel (or any greater amount shown to be safe) that can escape into the engine compartment.

(2) At least two vents arranged to minimize the probability of both vents becoming obstructed simultaneously.

(3) Filler caps designed to minimize the probability of incorrect installation or inflight loss.

(4) A fuel system in which those parts of the system from each tank outlet to any engine are independent of each part of the system supplying fuel to any other engine.

[Doc. No. 4080, 29 FR 17955, Dec. 18, 1964, as amended by Amdt. 23–7, 34 FR 13093 Aug. 13, 1969; Amdt. 23–43, 58 FR 18971, Apr. 9, 1993]

### § 23.954 Fuel system lightning protection.

The fuel system must be designed and arranged to prevent the ignition of fuel vapor within the system by—

(a) Direct lightning strikes to areas having a high probability of stroke attachment;

(b) Swept lightning strokes on areas where swept strokes are highly probable; and

(c) Corona or streamering at fuel vent outlets.

[Amdt. 23–7, 34 FR 13093, Aug. 13, 1969]

### § 23.955 Fuel flow.

(a) *General.* The ability of the fuel system to provide fuel at the rates

specified in this section and at a pressure sufficient for proper engine operation must be shown in the attitude that is most critical with respect to fuel feed and quantity of unusable fuel. These conditions may be simulated in a suitable mockup. In addition—

(1) The quantity of fuel in the tank may not exceed the amount established as the unusable fuel supply for that tank under §23.959(a) plus that quantity necessary to show compliance with this section.

(2) If there is a fuel flowmeter, it must be blocked during the flow test and the fuel must flow through the meter or its bypass.

(3) If there is a flowmeter without a bypass, it must not have any probable failure mode that would restrict fuel flow below the level required for this fuel demonstration.

(4) The fuel flow must include that flow necessary for vapor return flow, jet pump drive flow, and for all other purposes for which fuel is used.

(b) *Gravity systems.* The fuel flow rate for gravity systems (main and reserve supply) must be 150 percent of the takeoff fuel consumption of the engine.

(c) *Pump systems.* The fuel flow rate for each pump system (main and reserve supply) for each reciprocating engine must be 125 percent of the fuel flow required by the engine at the maximum takeoff power approved under this part.

(1) This flow rate is required for each main pump and each emergency pump, and must be available when the pump is operating as it would during takeoff;

(2) For each hand-operated pump, this rate must occur at not more than 60 complete cycles (120 single strokes) per minute.

(3) The fuel pressure, with main and emergency pumps operating simultaneously, must not exceed the fuel inlet pressure limits of the engine unless it can be shown that no adverse effect occurs.

(d) *Auxiliary fuel systems and fuel transfer systems.* Paragraphs (b), (c), and (f) of this section apply to each auxiliary and transfer system, except that—

(1) The required fuel flow rate must be established upon the basis of maximum continuous power and engine rotational speed, instead of takeoff power and fuel consumption; and

(2) If there is a placard providing operating instructions, a lesser flow rate may be used for transferring fuel from any auxiliary tank into a larger main tank. This lesser flow rate must be adequate to maintain engine maximum continuous power but the flow rate must not overfill the main tank at lower engine powers.

(e) *Multiple fuel tanks.* For reciprocating engines that are supplied with fuel from more than one tank, if engine power loss becomes apparent due to fuel depletion from the tank selected, it must be possible after switching to any full tank, in level flight, to obtain 75 percent maximum continuous power on that engine in not more than—

(1) 10 seconds for naturally aspirated single-engine airplanes;

(2) 20 seconds for turbocharged single-engine airplanes, provided that 75 percent maximum continuous naturally aspirated power is regained within 10 seconds; or

(3) 20 seconds for multiengine airplanes.

(f) *Turbine engine fuel systems.* Each turbine engine fuel system must provide at least 100 percent of the fuel flow required by the engine under each intended operation condition and maneuver. The conditions may be simulated in a suitable mockup. This flow must—

(1) Be shown with the airplane in the most adverse fuel feed condition (with respect to altitudes, attitudes, and other conditions) that is expected in operation; and

(2) For multiengine airplanes, notwithstanding the lower flow rate allowed by paragraph (d) of this section, be automatically uninterrupted with respect to any engine until all the fuel scheduled for use by that engine has been consumed. In addition—

(i) For the purposes of this section, ''fuel scheduled for use by that engine'' means all fuel in any tank intended for use by a specific engine.

(ii) The fuel system design must clearly indicate the engine for which fuel in any tank is scheduled.

(iii) Compliance with this paragraph must require no pilot action after completion of the engine starting phase of operations.

(3) For single-engine airplanes, require no pilot action after completion of the engine starting phase of operations unless means are provided that unmistakenly alert the pilot to take any needed action at least five minutes prior to the needed action; such pilot action must not cause any change in engine operation; and such pilot action must not distract pilot attention from essential flight duties during any phase of operations for which the airplane is approved.

[Doc. No. 4080, 29 FR 17955, Dec. 18, 1964, as amended by Amdt. 23–7, 34 FR 13093, Aug. 13, 1969; Amdt. 23–43, 58 FR 18971, Apr. 9, 1993; Amdt. 23–51, 61 FR 5136, Feb. 9, 1996]

### § 23.957 Flow between interconnected tanks.

(a) It must be impossible, in a gravity feed system with interconnected tank outlets, for enough fuel to flow between the tanks to cause an overflow of fuel from any tank vent under the conditions in § 23.959, except that full tanks must be used.

(b) If fuel can be pumped from one tank to another in flight, the fuel tank vents and the fuel transfer system must be designed so that no structural damage to any airplane component can occur because of overfilling of any tank.

[Doc. No. 4080, 29 FR 17955, Dec. 18, 1964, as amended by Amdt. 23–43, 58 FR 18972, Apr. 9, 1993]

### § 23.959 Unusable fuel supply.

(a) The unusable fuel supply for each tank must be established as not less than that quantity at which the first evidence of malfunctioning occurs under the most adverse fuel feed condition occurring under each intended operation and flight maneuver involving that tank. Fuel system component failures need not be considered.

(b) The effect on the usable fuel quantity as a result of a failure of any pump shall be determined.

[Amdt. 23–7, 34 FR 13093, Aug. 13, 1969, as amended by Amdt. 23–18, 42 FR 15041, Mar. 17, 1977; Amdt. 23–51, 61 FR 5136, Feb. 9, 1996]

### § 23.961 Fuel system hot weather operation.

Each fuel system must be free from vapor lock when using fuel at its critical temperature, with respect to vapor formation, when operating the airplane in all critical operating and environmental conditions for which approval is requested. For turbine fuel, the initial temperature must be 110 °F, −0 °, +5 °F or the maximum outside air temperature for which approval is requested, whichever is more critical.

[Doc. No. 26344, 58 FR 18972, Apr. 9, 1993; 58 FR 27060, May 6, 1993]

### § 23.963 Fuel tanks: General.

(a) Each fuel tank must be able to withstand, without failure, the vibration, inertia, fluid, and structural loads that it may be subjected to in operation.

(b) Each flexible fuel tank liner must be shown to be suitable for the particular application.

(c) Each integral fuel tank must have adequate facilities for interior inspection and repair.

(d) The total usable capacity of the fuel tanks must be enough for at least one-half hour of operation at maximum continuous power.

(e) Each fuel quantity indicator must be adjusted, as specified in § 23.1337(b), to account for the unusable fuel supply determined under § 23.959(a).

[Doc. No. 4080, 29 FR 17955, Dec. 18, 1964; 30 FR 258, Jan. 9, 1965, as amended by Amdt 23–34, 52 FR 1832, Jan. 15, 1987; Amdt. 23–43, 58 FR 18972, Apr. 9, 1993; Amdt. 23–51, 61 FR 5136, Feb. 9, 1996]

### § 23.965 Fuel tank tests.

(a) Each fuel tank must be able to withstand the following pressures without failure or leakage:

(1) For each conventional metal tank and nonmetallic tank with walls not supported by the airplane structure, a pressure of 3.5 p.s.i., or that pressure developed during maximum ultimate acceleration with a full tank, whichever is greater.

(2) For each integral tank, the pressure developed during the maximum limit acceleration of the airplane with a full tank, with simultaneous application of the critical limit structural loads.

(3) For each nonmetallic tank with walls supported by the airplane structure and constructed in an acceptable manner using acceptable basic tank

material, and with actual or simulated support conditions, a pressure of 2 p.s.i. for the first tank of a specific design. The supporting structure must be designed for the critical loads occurring in the flight or landing strength conditions combined with the fuel pressure loads resulting from the corresponding accelerations.

(b) Each fuel tank with large, unsupported, or unstiffened flat surfaces,whose failure or deformation could cause fuel leakage, must be able to withstand the following test without leakage, failure, or excessive deformation of the tank walls:

(1) Each complete tank assembly and its support must be vibration tested while mounted to simulate the actual installation.

(2) Except as specified in paragraph (b)(4) of this section, the tank assembly must be vibrated for 25 hours at a total displacement of not less than 1/32 of an inch (unless another displacement is substantiated) while 2/3 filled with water or other suitable test fluid.

(3) The test frequency of vibration must be as follows:

(i) If no frequency of vibration resulting from any rpm within the normal operating range of engine or propeller speeds is critical, the test frequency of vibration is:

(A) The number of cycles per minute obtained by multiplying the maximum continuous propeller speed in rpm by 0.9 for propeller-driven airplanes, and

(B) For non-propeller driven airplanes the test frequency of vibration is 2,000 cycles per minute.

(ii) If only one frequency of vibration resulting from any rpm within the normal operating range of engine or propeller speeds is critical, that frequency of vibration must be the test frequency.

(iii) If more than one frequency of vibration resulting from any rpm within the normal operating range of engine or propeller speeds is critical, the most critical of these frequencies must be the test frequency.

(4) Under paragraph (b)(3) (ii) and (iii) of this section, the time of test must be adjusted to accomplish the same number of vibration cycles that would be accomplished in 25 hours at the frequency specified in paragraph (b)(3)(i) of this section.

(5) During the test, the tank assembly must be rocked at a rate of 16 to 20 complete cycles per minute, through an angle of 15° on either side of the horizontal (30° total), about an axis parallel to the axis of the fuselage, for 25 hours.

(c) Each integral tank using methods of construction and sealing not previously proven to be adequate by test data or service experience must be able to withstand the vibration test specified in paragraphs (b)(1) through (4) of this section.

(d) Each tank with a nonmetallic liner must be subjected to the sloshing test outlined in paragraph (b)(5) of this section, with the fuel at room temperature. In addition, a specimen liner of the same basic construction as that to be used in the airplane must, when installed in a suitable test tank, withstand the sloshing test with fuel at a temperature of 110° F.

[Doc. No. 4080, 29 FR 17955, Dec. 18, 1964, as amended by Amdt. 23–43, 58 FR 18972, Apr. 9, 1993; Amdt. 23–43, 61 FR 253, Jan. 4, 1996; Amdt. 23–51, 61 FR 5136, Feb. 9, 1996]

### § 23.967 Fuel tank installation.

(a) Each fuel tank must be supported so that tank loads are not concentrated. In addition—

(1) There must be pads, if necessary, to prevent chafing between each tank and its supports;

(2) Padding must be nonabsorbent or treated to prevent the absorption of fuel;

(3) If a flexible tank liner is used, it must be supported so that it is not required to withstand fluid loads;

(4) Interior surfaces adjacent to the liner must be smooth and free from projections that could cause wear, unless—

(i) Provisions are made for protection of the liner at those points; or

(ii) The construction of the liner itself provides such protection; and

(5) A positive pressure must be maintained within the vapor space of each bladder cell under any condition of operation, except for a particular condition for which it is shown that a zero or negative pressure will not cause the bladder cell to collapse; and

(6) Syphoning of fuel (other than minor spillage) or collapse of bladder fuel cells may not result from improper securing or loss of the fuel filler cap.

(b) Each tank compartment must be ventilated and drained to prevent the accumulation of flammable fluids or vapors. Each compartment adjacent to a tank that is an integral part of the airplane structure must also be ventilated and drained.

(c) No fuel tank may be on the engine side of the firewall. There must be at least one-half inch of clearance between the fuel tank and the firewall. No part of the engine nacelle skin that lies immediately behind a major air opening from the engine compartment may act as the wall of an integral tank.

(d) Each fuel tank must be isolated from personnel compartments by a fume-proof and fuel-proof enclosure that is vented and drained to the exterior of the airplane. The required enclosure must sustain any personnel compartment pressurization loads without permanent deformation or failure under the conditions of §§ 23.365 and 23.843 of this part. A bladder-type fuel cell, if used, must have a retaining shell at least equivalent to a metal fuel tank in structural integrity.

(e) Fuel tanks must be designed, located, and installed so as to retain fuel:

(1) When subjected to the inertia loads resulting from the ultimate static load factors prescribed in § 23.561(b)(2) of this part; and

(2) Under conditions likely to occur when the airplane lands on a paved runway at a normal landing speed under each of the following conditions:

(i) The airplane in a normal landing attitude and its landing gear retracted.

(ii) The most critical landing gear leg collapsed and the other landing gear legs extended.

In showing compliance with paragraph (e)(2) of this section, the tearing away of an engine mount must be considered unless all the engines are installed above the wing or on the tail or fuselage of the airplane.

[Doc. No. 4080, 29 FR 17955, Dec. 18, 1964, as amended by Amdt. 23–7, 34 FR 13903, Aug. 13, 1969; Amdt. 23–14, 38 FR 31823, Nov. 19, 1973; Amdt. 23–18, 42 FR 15041, Mar. 17, 1977; Amdt. 23–26, 45 FR 60171, Sept. 11, 1980; Amdt. 23–36, 53 FR 30815, Aug. 15, 1988; Amdt. 23–43, 58 FR 18972, Apr. 9, 1993]

### § 23.969 Fuel tank expansion space.

Each fuel tank must have an expansion space of not less than two percent of the tank capacity, unless the tank vent discharges clear of the airplane (in which case no expansion space is required). It must be impossible to fill the expansion space inadvertently with the airplane in the normal ground attitude.

### § 23.971 Fuel tank sump.

(a) Each fuel tank must have a drainable sump with an effective capacity, in the normal ground and flight attitudes, of 0.25 percent of the tank capacity, or 1/16 gallon, whichever is greater.

(b) Each fuel tank must allow drainage of any hazardous quantity of water from any part of the tank to its sump with the airplane in the normal ground attitude.

(c) Each reciprocating engine fuel system must have a sediment bowl or chamber that is accessible for drainage; has a capacity of 1 ounce for every 20 gallons of fuel tank capacity; and each fuel tank outlet is located so that, in the normal flight attitude, water will drain from all parts of the tank except the sump to the sediment bowl or chamber.

(d) Each sump, sediment bowl, and sediment chamber drain required by paragraphs (a), (b), and (c) of this section must comply with the drain provisions of § 23.999(b)(1) and (b)(2).

[Doc. No. 26344, 58 FR 18972, Apr. 9, 1993; 58 FR 27060, May 6, 1993]

### § 23.973 Fuel tank filler connection.

(a) Each fuel tank filler connection must be marked as prescribed in § 23.1557(c).

(b) Spilled fuel must be prevented from entering the fuel tank compartment or any part of the airplane other than the tank itself.

(c) Each filler cap must provide a fuel-tight seal for the main filler opening. However, there may be small openings in the fuel tank cap for venting purposes or for the purpose of allowing passage of a fuel gauge through the cap provided such openings comply with the requirements of §23.975(a).

(d) Each fuel filling point, except pressure fueling connection points, must have a provision for electrically bonding the airplane to ground fueling equipment.

(e) For airplanes with engines requiring gasoline as the only permissible fuel, the inside diameter of the fuel filler opening must be no larger than 2.36 inches.

(f) For airplanes with turbine engines, the inside diameter of the fuel filler opening must be no smaller than 2.95 inches.

[Doc. No. 4080, 29 FR 17955, Dec. 18, 1964; 30 FR 258, Jan. 9, 1965, as amended by Amdt. 23–18, 42 FR 15041, Mar. 17, 1977; Amdt. 23–43, 58 FR 18972, Apr. 9, 1993; Amdt. 23–51, 61 FR 5136, Feb. 9, 1996]

### §23.975 Fuel tank vents and carburetor vapor vents.

(a) Each fuel tank must be vented from the top part of the expansion space. In addition—

(1) Each vent outlet must be located and constructed in a manner that minimizes the possibility of its being obstructed by ice or other foreign matter;

(2) Each vent must be constructed to prevent siphoning of fuel during normal operation;

(3) The venting capacity must allow the rapid relief of excessive differences of pressure between the interior and exterior of the tank;

(4) Airspaces of tanks with interconnected outlets must be interconnected;

(5) There may be no point in any vent line where moisture can accumulate with the airplane in either the ground or level flight attitudes, unless drainage is provided. Any drain valve installed must be accessible for drainage;

(6) No vent may terminate at a point where the discharge of fuel from the vent outlet will constitute a fire hazard or from which fumes may enter personnel compartments; and

(7) Vents must be arranged to prevent the loss of fuel, except fuel discharged because of thermal expansion, when the airplane is parked in any direction on a ramp having a one-percent slope.

(b) Each carburetor with vapor elimination connections and each fuel injection engine employing vapor return provisions must have a separate vent line to lead vapors back to the top of one of the fuel tanks. If there is more than one tank and it is necessary to use these tanks in a definite sequence for any reason, the vapor vent line must lead back to the fuel tank to be used first, unless the relative capacities of the tanks are such that return to another tank is preferable.

(c) For acrobatic category airplanes, excessive loss of fuel during acrobatic maneuvers, including short periods of inverted flight, must be prevented. It must be impossible for fuel to siphon from the vent when normal flight has been resumed after any acrobatic maneuver for which certification is requested.

[Doc. No. 4080, 29 FR 17955, Dec. 18, 1964; 30 FR 258, Jan. 9, 1965, as amended by Amdt. 23–18, 42 FR 15041, Mar. 17, 1977; Amdt. 23–29, 49 FR 6847, Feb. 23, 1984; Amdt. 23–43, 58 FR 18973, Apr. 9, 1993; Amdt. 23–51, 61 FR 5136, Feb. 9, 1996]

### §23.977 Fuel tank outlet.

(a) There must be a fuel strainer for the fuel tank outlet or for the booster pump. This strainer must—

(1) For reciprocating engine powered airplanes, have 8 to 16 meshes per inch; and

(2) For turbine engine powered airplanes, prevent the passage of any object that could restrict fuel flow or damage any fuel system component.

(b) The clear area of each fuel tank outlet strainer must be at least five times the area of the outlet line.

(c) The diameter of each strainer must be at least that of the fuel tank outlet.

(d) Each strainer must be accessible for inspection and cleaning.

[Amdt. 23–17, 41 FR 55465, Dec. 20, 1976, as amended by Amdt. 23–43, 58 FR 18973, Apr. 9, 1993]

### § 23.979 Pressure fueling systems.

For pressure fueling systems, the following apply:

(a) Each pressure fueling system fuel manifold connection must have means to prevent the escape of hazardous quantities of fuel from the system if the fuel entry valve fails.

(b) An automatic shutoff means must be provided to prevent the quantity of fuel in each tank from exceeding the maximum quantity approved for that tank. This means must—

(1) Allow checking for proper shutoff operation before each fueling of the tank; and

(2) For commuter category airplanes, indicate at each fueling station, a failure of the shutoff means to stop the fuel flow at the maximum quantity approved for that tank.

(c) A means must be provided to prevent damage to the fuel system in the event of failure of the automatic shutoff means prescribed in paragraph (b) of this section.

(d) All parts of the fuel system up to the tank which are subjected to fueling pressures must have a proof pressure of 1.33 times, and an ultimate pressure of at least 2.0 times, the surge pressure likely to occur during fueling.

[Amdt. 23–14, 38 FR 31823, Nov. 19, 1973, as amended by Amdt. 23–51, 61 FR 5137, Feb. 9, 1996]

## FUEL SYSTEM COMPONENTS

### § 23.991 Fuel pumps.

(a) *Main pumps.* For main pumps, the following apply:

(1) For reciprocating engine installations having fuel pumps to supply fuel to the engine, at least one pump for each engine must be directly driven by the engine and must meet § 23.955. This pump is a main pump.

(2) For turbine engine installations, each fuel pump required for proper engine operation, or required to meet the fuel system requirements of this subpart (other than those in paragraph (b) of this section), is a main pump. In addition—

(i) There must be at least one main pump for each turbine engine;

(ii) The power supply for the main pump for each engine must be independent of the power supply for each main pump for any other engine; and

(iii) For each main pump, provision must be made to allow the bypass of each positive displacement fuel pump other than a fuel injection pump approved as part of the engine.

(b) *Emergency pumps.* There must be an emergency pump immediately available to supply fuel to the engine if any main pump (other than a fuel injection pump approved as part of an engine) fails. The power supply for each emergency pump must be independent of the power supply for each corresponding main pump.

(c) *Warning means.* If both the main pump and emergency pump operate continuously, there must be a means to indicate to the appropriate flight crewmembers a malfunction of either pump.

(d) Operation of any fuel pump may not affect engine operation so as to create a hazard, regardless of the engine power or thrust setting or the functional status of any other fuel pump.

[Doc. No. 4080, 29 FR 17955, Dec. 18, 1964, as amended by Amdt. 23–7, 34 FR 13093, Aug. 13, 1969; Amdt. 23–26, 45 FR 60171, Sept. 11, 1980; Amdt. 23–43, 58 FR 18973, Apr. 9, 1993]

### § 23.993 Fuel system lines and fittings.

(a) Each fuel line must be installed and supported to prevent excessive vibration and to withstand loads due to fuel pressure and accelerated flight conditions.

(b) Each fuel line connected to components of the airplane between which relative motion could exist must have provisions for flexibility.

(c) Each flexible connection in fuel lines that may be under pressure and subjected to axial loading must use flexible hose assemblies.

(d) Each flexible hose must be shown to be suitable for the particular application.

(e) No flexible hose that might be adversely affected by exposure to high

temperatures may be used where excessive temperatures will exist during operation or after engine shutdown.

[Doc. No. 4080, 29 FR 17955, Dec. 18, 1964, as amended by Amdt. 23–43, 58 FR 18973, Apr. 9, 1993]

### §23.994 Fuel system components.

Fuel system components in an engine nacelle or in the fuselage must be protected from damage which could result in spillage of enough fuel to constitute a fire hazard as a result of a wheels-up landing on a paved runway.

[Amdt. 23–29, 49 FR 6847, Feb. 23, 1984]

### §23.995 Fuel valves and controls.

(a) There must be a means to allow appropriate flight crew members to rapidly shut off, in flight, the fuel to each engine individually.

(b) No shutoff valve may be on the engine side of any firewall. In addition, there must be means to—

(1) Guard against inadvertent operation of each shutoff valve; and

(2) Allow appropriate flight crew members to reopen each valve rapidly after it has been closed.

(c) Each valve and fuel system control must be supported so that loads resulting from its operation or from accelerated flight conditions are not transmitted to the lines connected to the valve.

(d) Each valve and fuel system control must be installed so that gravity and vibration will not affect the selected position.

(e) Each fuel valve handle and its connections to the valve mechanism must have design features that minimize the possibility of incorrect installation.

(f) Each check valve must be constructed, or otherwise incorporate provisions, to preclude incorrect assembly or connection of the valve.

(g) Fuel tank selector valves must—

(1) Require a separate and distinct action to place the selector in the ''OFF'' position; and

(2) Have the tank selector positions located in such a manner that it is impossible for the selector to pass through the ''OFF'' position when changing from one tank to another.

[Doc. No. 4080, 29 FR 17955, Dec. 18, 1964, as amended by Amdt. 23–14, 38 FR 31823, Nov. 19, 1973; Amdt. 23–17, 41 FR 55465, Dec. 20, 1976; Amdt. 23–18, 42 FR 15041, Mar. 17, 1977; Amdt. 23–29, 49 FR 6847, Feb. 23, 1984]

### §23.997 Fuel strainer or filter.

There must be a fuel strainer or filter between the fuel tank outlet and the inlet of either the fuel metering device or an engine driven positive displacement pump, whichever is nearer the fuel tank outlet. This fuel strainer or filter must—

(a) Be accessible for draining and cleaning and must incorporate a screen or element which is easily removable;

(b) Have a sediment trap and drain except that it need not have a drain if the strainer or filter is easily removable for drain purposes;

(c) Be mounted so that its weight is not supported by the connecting lines or by the inlet or outlet connections of the strainer or filter itself, unless adequate strength margins under all loading conditions are provided in the lines and connections; and

(d) Have the capacity (with respect to operating limitations established for the engine) to ensure that engine fuel system functioning is not impaired, with the fuel contaminated to a degree (with respect to particle size and density) that is greater than that established for the engine during its type certification.

(e) In addition, for commuter category airplanes, unless means are provided in the fuel system to prevent the accumulation of ice on the filter, a means must be provided to automatically maintain the fuel flow if ice clogging of the filter occurs.

[Amdt. 23–15, 39 FR 35459, Oct. 1, 1974, as amended by Amdt. 23–29, 49 FR 6847, Feb. 23, 1984; Amdt. 23–34, 52 FR 1832, Jan. 15, 1987; Amdt. 23–43, 58 FR 18973, Apr. 9, 1993]

### §23.999 Fuel system drains.

(a) There must be at least one drain to allow safe drainage of the entire fuel system with the airplane in its normal ground attitude.

(b) Each drain required by paragraph (a) of this section and §23.971 must—

(1) Discharge clear of all parts of the airplane;

(2) Have a drain valve—

(i) That has manual or automatic means for positive locking in the closed position;

(ii) That is readily accessible;

(iii) That can be easily opened and closed;

(iv) That allows the fuel to be caught for examination;

(v) That can be observed for proper closing; and

(vi) That is either located or protected to prevent fuel spillage in the event of a landing with landing gear retracted.

[Doc. No. 4080, 29 FR 17955, Dec. 18, 1964, as amended by Amdt. 23–17, 41 FR 55465, Dec. 20, 1976; Amdt. 23–43, 58 FR 18973, Apr. 9, 1993]

### § 23.1001 Fuel jettisoning system.

(a) If the design landing weight is less than that permitted under the requirements of § 23.473(b), the airplane must have a fuel jettisoning system installed that is able to jettison enough fuel to bring the maximum weight down to the design landing weight. The average rate of fuel jettisoning must be at least 1 percent of the maximum weight per minute, except that the time required to jettison the fuel need not be less than 10 minutes.

(b) Fuel jettisoning must be demonstrated at maximum weight with flaps and landing gear up and in—

(1) A power-off glide at 1.4 $V_{S1}$;

(2) A climb, at the speed at which the one-engine-inoperative enroute climb data have been established in accordance with § 23.69(b), with the critical engine inoperative and the remaining engines at maximum continuous power; and

(3) Level flight at 1.4 $V_S$**1**, if the results of the tests in the conditions specified in paragraphs (b)(1) and (2) of this section show that this condition could be critical.

(c) During the flight tests prescribed in paragraph (b) of this section, it must be shown that—

(1) The fuel jettisoning system and its operation are free from fire hazard;

(2) The fuel discharges clear of any part of the airplane;

(3) Fuel or fumes do not enter any parts of the airplane; and

(4) The jettisoning operation does not adversely affect the controllability of the airplane.

(d) For reciprocating engine powered airplanes, the jettisoning system must be designed so that it is not possible to jettison the fuel in the tanks used for takeoff and landing below the level allowing 45 minutes flight at 75 percent maximum continuous power. However, if there is an auxiliary control independent of the main jettisoning control, the system may be designed to jettison all the fuel.

(e) For turbine engine powered airplanes, the jettisoning system must be designed so that it is not possible to jettison fuel in the tanks used for takeoff and landing below the level allowing climb from sea level to 10,000 feet and thereafter allowing 45 minutes cruise at a speed for maximum range.

(f) The fuel jettisoning valve must be designed to allow flight crewmembers to close the valve during any part of the jettisoning operation.

(g) Unless it is shown that using any means (including flaps, slots, and slats) for changing the airflow across or around the wings does not adversely affect fuel jettisoning, there must be a placard, adjacent to the jettisoning control, to warn flight crewmembers against jettisoning fuel while the means that change the airflow are being used.

(h) The fuel jettisoning system must be designed so that any reasonably probable single malfunction in the system will not result in a hazardous condition due to unsymmetrical jettisoning of, or inability to jettison, fuel.

[Amdt. 23–7, 34 FR 13094, Aug. 13, 1969, as amended by Amdt. 23–43, 58 FR 18973, Apr. 9, 1993; Amdt. 23–51, 61 FR 5137, Feb. 9, 1996]

## OIL SYSTEM

### § 23.1011 General.

(a) For oil systems and components that have been approved under the engine airworthiness requirements and where those requirements are equal to or more severe than the corresponding requirements of subpart E of this part, that approval need not be duplicated. Where the requirements of subpart E of

this part are more severe, substantiation must be shown to the requirements of subpart E of this part.

(b) Each engine must have an independent oil system that can supply it with an appropriate quantity of oil at a temperature not above that safe for continuous operation.

(c) The usable oil tank capacity may not be less than the product of the endurance of the airplane under critical operating conditions and the maximum oil consumption of the engine under the same conditions, plus a suitable margin to ensure adequate circulation and cooling.

(d) For an oil system without an oil transfer system, only the usable oil tank capacity may be considered. The amount of oil in the engine oil lines, the oil radiator, and the feathering reserve, may not be considered.

(e) If an oil transfer system is used, and the transfer pump can pump some of the oil in the transfer lines into the main engine oil tanks, the amount of oil in these lines that can be pumped by the transfer pump may be included in the oil capacity.

[Doc. No. 4080, 29 FR 17955, Dec. 18, 1964, as amended by Amdt. 23–43, 58 FR 18973, Apr. 9, 1993]

### § 23.1013 Oil tanks.

(a) *Installation.* Each oil tank must be installed to—

(1) Meet the requirements of § 23.967 (a) and (b); and

(2) Withstand any vibration, inertia, and fluid loads expected in operation.

(b) *Expansion space.* Oil tank expansion space must be provided so that—

(1) Each oil tank used with a reciprocating engine has an expansion space of not less than the greater of 10 percent of the tank capacity or 0.5 gallon, and each oil tank used with a turbine engine has an expansion space of not less than 10 percent of the tank capacity; and

(2) It is impossible to fill the expansion space inadvertently with the airplane in the normal ground attitude.

(c) *Filler connection.* Each oil tank filler connection must be marked as specified in § 23.1557(c). Each recessed oil tank filler connection of an oil tank used with a turbine engine, that can retain any appreciable quantity of oil, must have provisions for fitting a drain.

(d) *Vent.* Oil tanks must be vented as follows:

(1) Each oil tank must be vented to the engine from the top part of the expansion space so that the vent connection is not covered by oil under any normal flight condition.

(2) Oil tank vents must be arranged so that condensed water vapor that might freeze and obstruct the line cannot accumulate at any point.

(3) For acrobatic category airplanes, there must be means to prevent hazardous loss of oil during acrobatic maneuvers, including short periods of inverted flight.

(e) *Outlet.* No oil tank outlet may be enclosed by any screen or guard that would reduce the flow of oil below a safe value at any operating temperature. No oil tank outlet diameter may be less than the diameter of the engine oil pump inlet. Each oil tank used with a turbine engine must have means to prevent entrance into the tank itself, or into the tank outlet, of any object that might obstruct the flow of oil through the system. There must be a shutoff valve at the outlet of each oil tank used with a turbine engine, unless the external portion of the oil system (including oil tank supports) is fireproof.

(f) *Flexible liners.* Each flexible oil tank liner must be of an acceptable kind.

(g) Each oil tank filler cap of an oil tank that is used with an engine must provide an oiltight seal.

[Doc. No. 4080, 29 FR 17955, Dec. 18, 1964, as amended by Amdt. 23–15, 39 FR 35459 Oct. 1, 1974; Amdt. 23–43, 58 FR 18973, Apr. 9, 1993; Amdt. 23–51, 61 FR 5137, Feb. 9, 1996]

### § 23.1015 Oil tank tests.

Each oil tank must be tested under § 23.965, except that—

(a) The applied pressure must be five p.s.i. for the tank construction instead of the pressures specified in § 23.965(a);

(b) For a tank with a nonmetallic liner the test fluid must be oil rather than fuel as specified in § 23.965(d), and the slosh test on a specimen liner must be conducted with the oil at 250° F.; and

(c) For pressurized tanks used with a turbine engine, the test pressure may not be less than 5 p.s.i. plus the maximum operating pressure of the tank.

[Doc. No. 4080, 29 FR 17955, Dec. 18, 1964, as amended by Amdt. 23–15, 39 FR 35460, Oct. 1, 1974]

### § 23.1017 Oil lines and fittings.

(a) *Oil lines.* Oil lines must meet § 23.993 and must accommodate a flow of oil at a rate and pressure adequate for proper engine functioning under any normal operating condition.

(b) *Breather lines.* Breather lines must be arranged so that—

(1) Condensed water vapor or oil that might freeze and obstruct the line cannot accumulate at any point;

(2) The breather discharge will not constitute a fire hazard if foaming occurs, or cause emitted oil to strike the pilot's windshield;

(3) The breather does not discharge into the engine air induction system; and

(4) For acrobatic category airplanes, there is no excessive loss of oil from the breather during acrobatic maneuvers, including short periods of inverted flight.

(5) The breather outlet is protected against blockage by ice or foreign matter.

[Doc. No. 4080, 29 FR 17955, Dec. 18, 1964, as amended by Amdt. 23–7, 34 FR 13094, Aug. 13, 1969; Amdt. 23–14, 38 FR 31823, Nov. 19, 1973]

### § 23.1019 Oil strainer or filter.

(a) Each turbine engine installation must incorporate an oil strainer or filter through which all of the engine oil flows and which meets the following requirements:

(1) Each oil strainer or filter that has a bypass, must be constructed and installed so that oil will flow at the normal rate through the rest of the system with the strainer or filter completely blocked.

(2) The oil strainer or filter must have the capacity (with respect to operating limitations established for the engine) to ensure that engine oil system functioning is not impaired when the oil is contaminated to a degree (with respect to particle size and density) that is greater than that established for the engine for its type certification.

(3) The oil strainer or filter, unless it is installed at an oil tank outlet, must incorporate a means to indicate contamination before it reaches the capacity established in accordance with paragraph (a)(2) of this section.

(4) The bypass of a strainer or filter must be constructed and installed so that the release of collected contaminants is minimized by appropriate location of the bypass to ensure that collected contaminants are not in the bypass flow path.

(5) An oil strainer or filter that has no bypass, except one that is installed at an oil tank outlet, must have a means to connect it to the warning system required in § 23.1305(c)(9).

(b) Each oil strainer or filter in a powerplant installation using reciprocating engines must be constructed and installed so that oil will flow at the normal rate through the rest of the system with the strainer or filter element completely blocked.

[Amdt. 23–15, 39 FR 35460, Oct. 1, 1974, as amended by Amdt. 23–29, 49 FR 6847, Feb. 23, 1984; Amdt. 23–43, 58 FR 18973, Apr. 9, 1993]

### § 23.1021 Oil system drains.

A drain (or drains) must be provided to allow safe drainage of the oil system. Each drain must—

(a) Be accessible;

(b) Have drain valves, or other closures, employing manual or automatic shut-off means for positive locking in the closed position; and

(c) Be located or protected to prevent inadvertent operation.

[Amdt. 23–29, 49 FR 6847, Feb. 23, 1984, as amended by Amdt. 23–43, 58 FR 18973, Apr. 9, 1993]

### § 23.1023 Oil radiators.

Each oil radiator and its supporting structures must be able to withstand the vibration, inertia, and oil pressure loads to which it would be subjected in operation.

### § 23.1027 Propeller feathering system.

(a) If the propeller feathering system uses engine oil and that oil supply can become depleted due to failure of any part of the oil system, a means must be

incorporated to reserve enough oil to operate the feathering system.

(b) The amount of reserved oil must be enough to accomplish feathering and must be available only to the feathering pump.

(c) The ability of the system to accomplish feathering with the reserved oil must be shown.

(d) Provision must be made to prevent sludge or other foreign matter from affecting the safe operation of the propeller feathering system.

[Doc. No. 4080, 29 FR 17955, Dec. 18, 1964, as amended by Amdt. 23–14, 38 FR 31823, Nov. 19, 1973; Amdt. 23–43, 58 FR 18973, Apr. 9, 1993]

COOLING

### § 23.1041 General.

The powerplant and auxiliary power unit cooling provisions must maintain the temperatures of powerplant components and engine fluids, and auxiliary power unit components and fluids within the limits established for those components and fluids under the most adverse ground, water, and flight operations to the maximum altitude and maximum ambient atmospheric temperature conditions for which approval is requested, and after normal engine and auxiliary power unit shutdown.

[Doc. No. 26344, 58 FR 18973, Apr. 9, 1993, as amended by Amdt. 23–51, 61 FR 5137, Feb. 9, 1996]

### § 23.1043 Cooling tests.

(a) *General.* Compliance with § 23.1041 must be shown on the basis of tests, for which the following apply:

(1) If the tests are conducted under ambient atmospheric temperature conditions deviating from the maximum for which approval is requested, the recorded powerplant temperatures must be corrected under paragraphs (c) and (d) of this section, unless a more rational correction method is applicable.

(2) No corrected temperature determined under paragraph (a)(1) of this section may exceed established limits.

(3) The fuel used during the cooling tests must be of the minimum grade approved for the engine.

(4) For turbocharged engines, each turbocharger must be operated through that part of the climb profile for which operation with the turbocharger is requested.

(5) For a reciprocating engine, the mixture settings must be the leanest recommended for climb.

(b) *Maximum ambient atmospheric temperature.* A maximum ambient atmospheric temperature corresponding to sea level conditions of at least 100 degrees F must be established. The assumed temperature lapse rate is 3.6 degrees F per thousand feet of altitude above sea level until a temperature of −69.7 degrees F is reached, above which altitude the temperature is considered constant at −69.7 degrees F. However, for winterization installations, the applicant may select a maximum ambient atmospheric temperature corresponding to sea level conditions of less than 100 degrees F.

(c) *Correction factor (except cylinder barrels).* Temperatures of engine fluids and powerplant components (except cylinder barrels) for which temperature limits are established, must be corrected by adding to them the difference between the maximum ambient atmospheric temperature for the relevant altitude for which approval has been requested and the temperature of the ambient air at the time of the first occurrence of the maximum fluid or component temperature recorded during the cooling test.

(d) *Correction factor for cylinder barrel temperatures.* Cylinder barrel temperatures must be corrected by adding to them 0.7 times the difference between the maximum ambient atmospheric temperature for the relevant altitude for which approval has been requested and the temperature of the ambient air at the time of the first occurrence of the maximum cylinder barrel temperature recorded during the cooling test.

[Doc. No. 4080, 29 FR 17955, Dec. 18, 1964, as amended by Amdt. 23–7, 34 FR 13094, Aug. 13, 1969; Amdt. 23–21, 43 FR 2319, Jan. 16, 1978; Amdt. 23–51, 61 FR 5137, Feb. 9, 1996]

### § 23.1045 Cooling test procedures for turbine engine powered airplanes.

(a) Compliance with § 23.1041 must be shown for all phases of operation. The airplane must be flown in the configurations, at the speeds, and following the procedures recommended in the

Airplane Flight Manual for the relevant stage of flight, that correspond to the applicable performance requirements that are critical to cooling.

(b) Temperatures must be stabilized under the conditions from which entry is made into each stage of flight being investigated, unless the entry condition normally is not one during which component and engine fluid temperatures would stabilize (in which case, operation through the full entry condition must be conducted before entry into the stage of flight being investigated in order to allow temperatures to reach their natural levels at the time of entry). The takeoff cooling test must be preceded by a period during which the powerplant component and engine fluid temperatures are stabilized with the engines at ground idle.

(c) Cooling tests for each stage of flight must be continued until—

(1) The component and engine fluid temperatures stabilize;

(2) The stage of flight is completed; or

(3) An operating limitation is reached.

[Amdt. 23–7, 34 FR 13094, Aug. 13, 1969, as amended by Amdt. 23–51, 61 FR 5137, Feb. 9, 1996]

### § 23.1047 Cooling test procedures for reciprocating engine powered airplanes.

Compliance with § 23.1041 must be shown for the climb (or, for multiengine airplanes with negative one-engine-inoperative rates of climb, the descent) stage of flight. The airplane must be flown in the configurations, at the speeds and following the procedures recommended in the Airplane Flight Manual, that correspond to the applicable performance requirements that are critical to cooling.

[Amdt. 23–51, 61 FR 5137, Feb. 9, 1996]

## LIQUID COOLING

### § 23.1061 Installation.

(a) *General.* Each liquid-cooled engine must have an independent cooling system (including coolant tank) installed so that—

(1) Each coolant tank is supported so that tank loads are distributed over a large part of the tank surface;

(2) There are pads or other isolation means between the tank and its supports to prevent chafing.

(3) Pads or any other isolation means that is used must be nonabsorbent or must be treated to prevent absorption of flammable fluids; and

(4) No air or vapor can be trapped in any part of the system, except the coolant tank expansion space, during filling or during operation.

(b) *Coolant tank.* The tank capacity must be at least one gallon, plus 10 percent of the cooling system capacity. In addition—

(1) Each coolant tank must be able to withstand the vibration, inertia, and fluid loads to which it may be subjected in operation;

(2) Each coolant tank must have an expansion space of at least 10 percent of the total cooling system capacity; and

(3) It must be impossible to fill the expansion space inadvertently with the airplane in the normal ground attitude.

(c) *Filler connection.* Each coolant tank filler connection must be marked as specified in § 23.1557(c). In addition—

(1) Spilled coolant must be prevented from entering the coolant tank compartment or any part of the airplane other than the tank itself; and

(2) Each recessed coolant filler connection must have a drain that discharges clear of the entire airplane.

(d) *Lines and fittings.* Each coolant system line and fitting must meet the requirements of § 23.993, except that the inside diameter of the engine coolant inlet and outlet lines may not be less than the diameter of the corresponding engine inlet and outlet connections.

(e) *Radiators.* Each coolant radiator must be able to withstand any vibration, inertia, and coolant pressure load to which it may normally be subjected. In addition—

(1) Each radiator must be supported to allow expansion due to operating temperatures and prevent the transmittal of harmful vibration to the radiator; and

(2) If flammable coolant is used, the air intake duct to the coolant radiator must be located so that (in case of fire) flames from the nacelle cannot strike the radiator.

(f) *Drains.* There must be an accessible drain that—

(1) Drains the entire cooling system (including the coolant tank, radiator, and the engine) when the airplane is in the normal ground altitude;

(2) Discharges clear of the entire airplane; and

(3) Has means to positively lock it closed.

[Doc. No. 4080, 29 FR 17955, Dec. 18, 1964, as amended by Amdt. 23–43, 58 FR 18973, Apr. 9, 1993]

### § 23.1063 Coolant tank tests.

Each coolant tank must be tested under § 23.965, except that—

(a) The test required by § 23.965(a)(1) must be replaced with a similar test using the sum of the pressure developed during the maximum ultimate acceleration with a full tank or a pressure of 3.5 pounds per square inch, whichever is greater, plus the maximum working pressure of the system; and

(b) For a tank with a nonmetallic liner the test fluid must be coolant rather than fuel as specified in § 23.965(d), and the slosh test on a specimen liner must be conducted with the coolant at operating temperature.

INDUCTION SYSTEM

### § 23.1091 Air induction system.

(a) The air induction system for each engine and auxiliary power unit and their accessories must supply the air required by that engine and auxiliary power unit and their accessories under the operating conditions for which certification is requested.

(b) Each reciprocating engine installation must have at least two separate air intake sources and must meet the following:

(1) Primary air intakes may open within the cowling if that part of the cowling is isolated from the engine accessory section by a fire-resistant diaphragm or if there are means to prevent the emergence of backfire flames.

(2) Each alternate air intake must be located in a sheltered position and may not open within the cowling if the emergence of backfire flames will result in a hazard.

(3) The supplying of air to the engine through the alternate air intake system may not result in a loss of excessive power in addition to the power loss due to the rise in air temperature.

(4) Each automatic alternate air door must have an override means accessible to the flight crew.

(5) Each automatic alternate air door must have a means to indicate to the flight crew when it is not closed.

(c) For turbine engine powered airplanes—

(1) There must be means to prevent hazardous quantities of fuel leakage or overflow from drains, vents, or other components of flammable fluid systems from entering the engine intake system; and

(2) The airplane must be designed to prevent water or slush on the runway, taxiway, or other airport operating surfaces from being directed into the engine or auxiliary power unit air intake ducts in hazardous quantities. The air intake ducts must be located or protected so as to minimize the hazard of ingestion of foreign matter during takeoff, landing, and taxiing.

[Doc. No. 4080, 29 FR 17955, Dec. 18, 1964, as amended by Amdt. 23–7, 34 FR 13095, Aug. 13, 1969; Amdt. 23–43, 58 FR 18973, Apr. 9, 1993; 58 FR 27060, May 6, 1993; Amdt. 23–51, 61 FR 5137, Feb. 9, 1996]

### § 23.1093 Induction system icing protection.

(a) *Reciprocating engines.* Each reciprocating engine air induction system must have means to prevent and eliminate icing. Unless this is done by other means, it must be shown that, in air free of visible moisture at a temperature of 30° F.—

(1) Each airplane with sea level engines using conventional venturi carburetors has a preheater that can provide a heat rise of 90° F. with the engines at 75 percent of maximum continuous power;

(2) Each airplane with altitude engines using conventional venturi carburetors has a preheater that can provide a heat rise of 120° F. with the engines at 75 percent of maximum continuous power;

(3) Each airplane with altitude engines using fuel metering device tending to prevent icing has a preheater

that, with the engines at 60 percent of maximum continuous power, can provide a heat rise of—

(i) 100° F.; or

(ii) 40° F., if a fluid deicing system meeting the requirements of §§ 23.1095 through 23.1099 is installed;

(4) Each airplane with sea level engine(s) using fuel metering device tending to prevent icing has a sheltered alternate source of air with a preheat of not less than 60 °F with the engines at 75 percent of maximum continuous power;

(5) Each airplane with sea level or altitude engine(s) using fuel injection systems having metering components on which impact ice may accumulate has a preheater capable of providing a heat rise of 75 °F when the engine is operating at 75 percent of its maximum continuous power; and

(6) Each airplane with sea level or altitude engine(s) using fuel injection systems not having fuel metering components projecting into the airstream on which ice may form, and introducing fuel into the air induction system downstream of any components or other obstruction on which ice produced by fuel evaporation may form, has a sheltered alternate source of air with a preheat of not less than 60 °F with the engines at 75 percent of its maximum continuous power.

(b) *Turbine engines.* (1) Each turbine engine and its air inlet system must operate throughout the flight power range of the engine (including idling), without the accumulation of ice on engine or inlet system components that would adversely affect engine operation or cause a serious loss of power or thrust—

(i) Under the icing conditions specified in appendix C of part 25 of this chapter; and

(ii) In snow, both falling and blowing, within the limitations established for the airplane for such operation.

(2) Each turbine engine must idle for 30 minutes on the ground, with the air bleed available for engine icing protection at its critical condition, without adverse effect, in an atmosphere that is at a temperature between 15° and 30° F (between −9° and −1° C) and has a liquid water content not less than 0.3 grams per cubic meter in the form of drops having a mean effective diameter not less than 20 microns, followed by momentary operation at takeoff power or thrust. During the 30 minutes of idle operation, the engine may be run up periodically to a moderate power or thrust setting in a manner acceptable to the Administrator.

(c) *Reciprocating engines with Superchargers.* For airplanes with reciprocating engines having superchargers to pressurize the air before it enters the fuel metering device, the heat rise in the air caused by that supercharging at any altitude may be utilized in determining compliance with paragraph (a) of this section if the heat rise utilized is that which will be available, automatically, for the applicable altitudes and operating condition because of supercharging.

[Amdt. 23-7, 34 FR 13095, Aug. 13, 1969, as amended by Amdt. 23–15, 39 FR 35460, Oct. 1, 1974; Amdt. 23–17, 41 FR 55465, Dec. 20, 1976; Amdt. 23–18, 42 FR 15041, Mar. 17, 1977; Amdt. 23–29, 49 FR 6847, Feb. 23, 1984; Amdt. 23–43, 58 FR 18973, Apr. 9, 1993; Amdt. 23–51, 61 FR 5137, Feb. 9, 1996]

### § 23.1095 Carburetor deicing fluid flow rate.

(a) If a carburetor deicing fluid system is used, it must be able to simultaneously supply each engine with a rate of fluid flow, expressed in pounds per hour, of not less than 2.5 times the square root of the maximum continuous power of the engine.

(b) The fluid must be introduced into the air induction system—

(1) Close to, and upstream of, the carburetor; and

(2) So that it is equally distributed over the entire cross section of the induction system air passages.

### § 23.1097 Carburetor deicing fluid system capacity.

(a) The capacity of each carburetor deicing fluid system—

(1) May not be less than the greater of—

(i) That required to provide fluid at the rate specified in § 23.1095 for a time equal to three percent of the maximum endurance of the airplane; or

(ii) 20 minutes at that flow rate; and

(2) Need not exceed that required for two hours of operation.

(b) If the available preheat exceeds 50° F. but is less than 100° F., the capacity of the system may be decreased in proportion to the heat rise available in excess of 50° F.

**§ 23.1099 Carburetor deicing fluid system detail design.**

Each carburetor deicing fluid system must meet the applicable requirements for the design of a fuel system, except as specified in §§ 23.1095 and 23.1097.

**§ 23.1101 Induction air preheater design.**

Each exhaust-heated, induction air preheater must be designed and constructed to—

(a) Ensure ventilation of the preheater when the induction air preheater is not being used during engine operation;

(b) Allow inspection of the exhaust manifold parts that it surrounds; and

(c) Allow inspection of critical parts of the preheater itself.

[Doc. No. 4080, 29 FR 17955, Dec. 18, 1964, as amended by Amdt. 23–43, 58 FR 18974, Apr. 9, 1993]

**§ 23.1103 Induction system ducts.**

(a) Each induction system duct must have a drain to prevent the accumulation of fuel or moisture in the normal ground and flight attitudes. No drain may discharge where it will cause a fire hazard.

(b) Each duct connected to components between which relative motion could exist must have means for flexibility.

(c) Each flexible induction system duct must be capable of withstanding the effects of temperature extremes, fuel, oil, water, and solvents to which it is expected to be exposed in service and maintenance without hazardous deterioration or delamination.

(d) For reciprocating engine installations, each induction system duct must be—

(1) Strong enough to prevent induction system failures resulting from normal backfire conditions; and

(2) Fire resistant in any compartment for which a fire extinguishing system is required.

(e) Each inlet system duct for an auxiliary power unit must be—

(1) Fireproof within the auxiliary power unit compartment;

(2) Fireproof for a sufficient distance upstream of the auxiliary power unit compartment to prevent hot gas reverse flow from burning through the duct and entering any other compartment of the airplane in which a hazard would be created by the entry of the hot gases;

(3) Constructed of materials suitable to the environmental conditions expected in service, except in those areas requiring fireproof or fire resistant materials; and

(4) Constructed of materials that will not absorb or trap hazardous quantities of flammable fluids that could be ignited by a surge or reverse-flow condition.

(f) Induction system ducts that supply air to a cabin pressurization system must be suitably constructed of material that will not produce hazardous quantities of toxic gases or isolated to prevent hazardous quantities of toxic gases from entering the cabin during a powerplant fire.

[Doc. No. 4080, 29 FR 17955, Dec. 18, 1964, as amended by Amdt. 23–7, 34 FR 13095, Aug. 13, 1969; Amdt. 23–43, 58 FR 18974, Apr. 9, 1993]

**§ 23.1105 Induction system screens.**

If induction system screens are used—

(a) Each screen must be upstream of the carburetor or fuel injection system.

(b) No screen may be in any part of the induction system that is the only passage through which air can reach the engine, unless—

(1) The available preheat is at least 100° F.; and

(2) The screen can be deiced by heated air;

(c) No screen may be deiced by alcohol alone; and

(d) It must be impossible for fuel to strike any screen.

[Doc. No. 4080, 29 FR 17955, Dec. 18, 1964; 30 FR 258, Jan. 9, 1996, as amended by Amdt. 23–51, 61 FR 5137, Feb. 9, 1996]

**§ 23.1107 Induction system filters.**

If an air filter is used to protect the engine against foreign material particles in the induction air supply—

(a) Each air filter must be capable of withstanding the effects of temperature extremes, rain, fuel, oil, and solvents to which it is expected to be exposed in service and maintenance; and

(b) Each air filter shall have a design feature to prevent material separated from the filter media from interfering with proper fuel metering operation.

[Doc. No. 26344, 58 FR 18974, Apr. 9, 1993, as amended by Amdt. 23–51, 61 FR 5137, Feb. 9, 1996]

### § 23.1109 Turbocharger bleed air system.

The following applies to turbocharged bleed air systems used for cabin pressurization:

(a) The cabin air system may not be subject to hazardous contamination following any probable failure of the turbocharger or its lubrication system.

(b) The turbocharger supply air must be taken from a source where it cannot be contaminated by harmful or hazardous gases or vapors following any probable failure or malfunction of the engine exhaust, hydraulic, fuel, or oil system.

[Amdt. 23–42, 56 FR 354, Jan. 3, 1991]

### § 23.1111 Turbine engine bleed air system.

For turbine engine bleed air systems, the following apply:

(a) No hazard may result if duct rupture or failure occurs anywhere between the engine port and the airplane unit served by the bleed air.

(b) The effect on airplane and engine performance of using maximum bleed air must be established.

(c) Hazardous contamination of cabin air systems may not result from failures of the engine lubricating system.

[Amdt. 23–7, 34 FR 13095, Aug. 13, 1969, as amended by Amdt. 23–17, 41 FR 55465, Dec. 20, 1976]

## EXHAUST SYSTEM

### § 23.1121 General.

For powerplant and auxiliary power unit installations, the following apply—

(a) Each exhaust system must ensure safe disposal of exhaust gases without fire hazard or carbon monoxide contamination in any personnel compartment.

(b) Each exhaust system part with a surface hot enough to ignite flammable fluids or vapors must be located or shielded so that leakage from any system carrying flammable fluids or vapors will not result in a fire caused by impingement of the fluids or vapors on any part of the exhaust system including shields for the exhaust system.

(c) Each exhaust system must be separated by fireproof shields from adjacent flammable parts of the airplane that are outside of the engine and auxiliary power unit compartments.

(d) No exhaust gases may discharge dangerously near any fuel or oil system drain.

(e) No exhaust gases may be discharged where they will cause a glare seriously affecting pilot vision at night.

(f) Each exhaust system component must be ventilated to prevent points of excessively high temperature.

(g) If significant traps exist, each turbine engine and auxiliary power unit exhaust system must have drains discharging clear of the airplane, in any normal ground and flight attitude, to prevent fuel accumulation after the failure of an attempted engine or auxiliary power unit start.

(h) Each exhaust heat exchanger must incorporate means to prevent blockage of the exhaust port after any internal heat exchanger failure.

(i) For the purpose of compliance with § 23.603, the failure of any part of the exhaust system will be considered to adversely affect safety.

[Doc. No. 4080, 29 FR 17955, Dec. 18, 1964, as amended by Amdt. 23–7, 34 FR 13095, Aug. 13, 1969; Amdt. 23–18, 42 FR 15042, Mar. 17, 1977; Amdt. 23–43, 58 FR 18974, Apr. 9, 1993; Amdt. 23–51, 61 FR 5137, Feb. 9, 1996]

### § 23.1123 Exhaust system.

(a) Each exhaust system must be fireproof and corrosion-resistant, and must have means to prevent failure due to expansion by operating temperatures.

(b) Each exhaust system must be supported to withstand the vibration and inertia loads to which it may be subjected in operation.

(c) Parts of the system connected to components between which relative

motion could exist must have means for flexibility.

[Doc. No. 4080, 29 FR 17955, Dec. 18, 1964, as amended by Amdt. 23–43, 58 FR 18974, Apr. 9, 1993]

### § 23.1125 Exhaust heat exchangers.

For reciprocating engine powered airplanes the following apply:

(a) Each exhaust heat exchanger must be constructed and installed to withstand the vibration, inertia, and other loads that it may be subjected to in normal operation. In addition—

(1) Each exchanger must be suitable for continued operation at high temperatures and resistant to corrosion from exhaust gases;

(2) There must be means for inspection of critical parts of each exchanger; and

(3) Each exchanger must have cooling provisions wherever it is subject to contact with exhaust gases.

(b) Each heat exchanger used for heating ventilating air must be constructed so that exhaust gases may not enter the ventilating air.

[Doc. No. 4080, 29 FR 17955, Dec. 18, 1964, as amended by Amdt. 23–17, 41 FR 55465, Dec. 20, 1976]

## POWERPLANT CONTROLS AND ACCESSORIES

### § 23.1141 Powerplant controls: General.

(a) Powerplant controls must be located and arranged under § 23.777 and marked under § 23.1555(a).

(b) Each flexible control must be shown to be suitable for the particular application.

(c) Each control must be able to maintain any necessary position without—

(1) Constant attention by flight crew members; or

(2) Tendency to creep due to control loads or vibration.

(d) Each control must be able to withstand operating loads without failure or excessive deflection.

(e) For turbine engine powered airplanes, no single failure or malfunction, or probable combination thereof, in any powerplant control system may cause the failure of any powerplant function necessary for safety.

(f) The portion of each powerplant control located in the engine compartment that is required to be operated in the event of fire must be at least fire resistant.

(g) Powerplant valve controls located in the cockpit must have—

(1) For manual valves, positive stops or in the case of fuel valves suitable index provisions, in the open and closed position; and

(2) For power-assisted valves, a means to indicate to the flight crew when the valve—

(i) Is in the fully open or fully closed position; or

(ii) Is moving between the fully open and fully closed position.

[Doc. No. 4080, 29 FR 17955, Dec. 18, 1964, as amended by Amdt. 23–7, 34 FR 13095, Aug. 13, 1969; Amdt. 23–14, 38 FR 31823, Nov. 19, 1973; Amdt. 23–18, 42 FR 15042, Mar. 17, 1977; Amdt. 23–51, 61 FR 5137, Feb. 9, 1996]

### § 23.1142 Auxiliary power unit controls.

Means must be provided on the flight deck for the starting, stopping, monitoring, and emergency shutdown of each installed auxiliary power unit.

[Doc. No. 26344, 58 FR 18974, Apr. 9, 1993]

### § 23.1143 Engine controls.

(a) There must be a separate power or thrust control for each engine and a separate control for each supercharger that requires a control.

(b) Power, thrust, and supercharger controls must be arranged to allow—

(1) Separate control of each engine and each supercharger; and

(2) Simultaneous control of all engines and all superchargers.

(c) Each power, thrust, or supercharger control must give a positive and immediate responsive means of controlling its engine or supercharger.

(d) The power, thrust, or supercharger controls for each engine or supercharger must be independent of those for every other engine or supercharger.

(e) For each fluid injection (other than fuel) system and its controls not provided and approved as part of the engine, the applicant must show that the flow of the injection fluid is adequately controlled.

(f) If a power, thrust, or a fuel control (other than a mixture control) incorporates a fuel shutoff feature, the control must have a means to prevent the inadvertent movement of the control into the off position. The means must—

(1) Have a positive lock or stop at the idle position; and

(2) Require a separate and distinct operation to place the control in the shutoff position.

(g) For reciprocating single-engine airplanes, each power or thrust control must be designed so that if the control separates at the engine fuel metering device, the airplane is capable of continued safe flight and landing.

[Amdt. 23–7, 34 FR 13095, Aug. 13, 1969, as amended by Amdt. 23–17, 41 FR 55465, Dec. 20, 1976; Amdt. 23–29, 49 FR 6847, Feb. 23, 1984; Amdt. 23–43, 58 FR 18974, Apr. 9, 1993; Amdt. 23–51, 61 FR 5137, Feb. 9, 1996]

### § 23.1145 Ignition switches.

(a) Ignition switches must control and shut off each ignition circuit on each engine.

(b) There must be means to quickly shut off all ignition on multiengine airplanes by the grouping of switches or by a master ignition control.

(c) Each group of ignition switches, except ignition switches for turbine engines for which continuous ignition is not required, and each master ignition control must have a means to prevent its inadvertent operation.

[Doc. No. 4080, 29 FR 17955, Dec. 18, 1964; 30 FR 258, Jan. 9, 1965, as amended by Amdt. 23–18, 42 FR 15042, Mar. 17, 1977; Amdt. 23–43, 58 FR 18974, Apr. 9, 1993]

### § 23.1147 Mixture controls.

(a) If there are mixture controls, each engine must have a separate control, and each mixture control must have guards or must be shaped or arranged to prevent confusion by feel with other controls.

(1) The controls must be grouped and arranged to allow—

(i) Separate control of each engine; and

(ii) Simultaneous control of all engines.

(2) The controls must require a separate and distinct operation to move the control toward lean or shut-off position.

(b) For reciprocating single-engine airplanes, each manual engine mixture control must be designed so that, if the control separates at the engine fuel metering device, the airplane is capable of continued safe flight and landing.

[Doc. No. 4080, 29 FR 17955, Dec. 18, 1964, as amended by Amdt. 23–7, 34 FR 13096, Aug. 13, 1969; Amdt. 23–33, 51 FR 26657, July 24, 1986; Amdt. 23–43, 58 FR 18974, Apr. 9, 1993]

### § 23.1149 Propeller speed and pitch controls.

(a) If there are propeller speed or pitch controls, they must be grouped and arranged to allow—

(1) Separate control of each propeller; and

(2) Simultaneous control of all propellers.

(b) The controls must allow ready synchronization of all propellers on multiengine airplanes.

### § 23.1153 Propeller feathering controls.

If there are propeller feathering controls installed, it must be possible to feather each propeller separately. Each control must have a means to prevent inadvertent operation.

[Doc. No. 27804, 61 FR 5138, Feb. 9, 1996]

### § 23.1155 Turbine engine reverse thrust and propeller pitch settings below the flight regime.

For turbine engine installations, each control for reverse thrust and for propeller pitch settings below the flight regime must have means to prevent its inadvertent operation. The means must have a positive lock or stop at the flight idle position and must require a separate and distinct operation by the crew to displace the control from the flight regime (forward thrust regime for turbojet powered airplanes).

[Amdt. 23–7, 34 FR 13096, Aug. 13, 1969]

### § 23.1157 Carburetor air temperature controls.

There must be a separate carburetor air temperature control for each engine.

**§ 23.1163 Powerplant accessories.**

(a) Each engine mounted accessory must—

(1) Be approved for mounting on the engine involved and use the provisions on the engines for mounting; or

(2) Have torque limiting means on all accessory drives in order to prevent the torque limits established for those drives from being exceeded; and

(3) In addition to paragraphs (a)(1) or (a)(2) of this section, be sealed to prevent contamination of the engine oil system and the accessory system.

(b) Electrical equipment subject to arcing or sparking must be installed to minimize the probability of contact with any flammable fluids or vapors that might be present in a free state.

(c) Each generator rated at or more than 6 kilowatts must be designed and installed to minimize the probability of a fire hazard in the event it malfunctions.

(d) If the continued rotation of any accessory remotely driven by the engine is hazardous when malfunctioning occurs, a means to prevent rotation without interfering with the continued operation of the engine must be provided.

(e) Each accessory driven by a gearbox that is not approved as part of the powerplant driving the gearbox must—

(1) Have torque limiting means to prevent the torque limits established for the affected drive from being exceeded;

(2) Use the provisions on the gearbox for mounting; and

(3) Be sealed to prevent contamination of the gearbox oil system and the accessory system.

[Doc. No. 4080, 29 FR 17955, Dec. 18, 1964, as amended by Amdt. 23–14, 38 FR 31823, Nov. 19, 1973; Amdt. 23–29, 49 FR 6847, Feb. 23, 1984; Amdt. 23–34, 52 FR 1832, Jan. 15, 1987; Amdt. 23–42, 56 FR 354, Jan. 3, 1991]

**§ 23.1165 Engine ignition systems.**

(a) Each battery ignition system must be supplemented by a generator that is automatically available as an alternate source of electrical energy to allow continued engine operation if any battery becomes depleted.

(b) The capacity of batteries and generators must be large enough to meet the simultaneous demands of the engine ignition system and the greatest demands of any electrical system components that draw from the same source.

(c) The design of the engine ignition system must account for—

(1) The condition of an inoperative generator;

(2) The condition of a completely depleted battery with the generator running at its normal operating speed; and

(3) The condition of a completely depleted battery with the generator operating at idling speed, if there is only one battery.

(d) There must be means to warn appropriate crewmembers if malfunctioning of any part of the electrical system is causing the continuous discharge of any battery used for engine ignition.

(e) Each turbine engine ignition system must be independent of any electrical circuit that is not used for assisting, controlling, or analyzing the operation of that system.

(f) In addition, for commuter category airplanes, each turbopropeller ignition system must be an essential electrical load.

[Doc. No. 4080, 29 FR 17955, Dec. 18, 1964, as amended by Amdt. 23–17, 41 FR 55465 Dec. 20, 1976; Amdt. 23–34, 52 FR 1833, Jan. 15, 1987]

POWERPLANT FIRE PROTECTION

**§ 23.1181 Designated fire zones; regions included.**

Designated fire zones are—

(a) For reciprocating engines—

(1) The power section;

(2) The accessory section;

(3) Any complete powerplant compartment in which there is no isolation between the power section and the accessory section.

(b) For turbine engines—

(1) The compressor and accessory sections;

(2) The combustor, turbine and tailpipe sections that contain lines or components carrying flammable fluids or gases.

(3) Any complete powerplant compartment in which there is no isolation between compressor, accessory, combustor, turbine, and tailpipe sections.

(c) Any auxiliary power unit compartment; and

(d) Any fuel-burning heater, and other combustion equipment installation described in § 23.859.

[Doc. No. 26344, 58 FR 18975, Apr. 9, 1993, as amended by Amdt. 23–51, 61 FR 5138, Feb. 9, 1996]

### § 23.1182 Nacelle areas behind firewalls.

Components, lines, and fittings, except those subject to the provisions of § 23.1351(e), located behind the engine-compartment firewall must be constructed of such materials and located at such distances from the firewall that they will not suffer damage sufficient to endanger the airplane if a portion of the engine side of the firewall is subjected to a flame temperature of not less than 2000 °F for 15 minutes.

[Amdt. 23–14, 38 FR 31816, Nov. 19, 1973]

### § 23.1183 Lines, fittings, and components.

(a) Except as provided in paragraph (b) of this section, each component, line, and fitting carrying flammable fluids, gas, or air in any area subject to engine fire conditions must be at least fire resistant, except that flammable fluid tanks and supports which are part of and attached to the engine must be fireproof or be enclosed by a fireproof shield unless damage by fire to any non-fireproof part will not cause leakage or spillage of flammable fluid. Components must be shielded or located so as to safeguard against the ignition of leaking flammable fluid. Flexible hose assemblies (hose and end fittings) must be shown to be suitable for the particular application. An integral oil sump of less than 25–quart capacity on a reciprocating engine need not be fireproof nor be enclosed by a fireproof shield.

(b) Paragraph (a) of this section does not apply to—

(1) Lines, fittings, and components which are already approved as part of a type certificated engine; and

(2) Vent and drain lines, and their fittings, whose failure will not result in, or add to, a fire hazard.

[Doc. No. 4080, 29 FR 17955, Dec. 18, 1964, as amended by Amdt. 23–5, 32 FR 6912, May 5, 1967; Amdt. 23–15, 39 FR 35460, Oct. 1, 1974; Amdt. 23–29, 49 FR 6847, Feb. 23, 1984; Amdt. 23–51, 61 FR 5138, Feb. 9, 1996]

### § 23.1189 Shutoff means.

(a) For each multiengine airplane the following apply:

(1) Each engine installation must have means to shut off or otherwise prevent hazardous quantities of fuel, oil, deicing fluid, and other flammable liquids from flowing into, within, or through any engine compartment, except in lines, fittings, and components forming an integral part of an engine.

(2) The closing of the fuel shutoff valve for any engine may not make any fuel unavailable to the remaining engines that would be available to those engines with that valve open.

(3) Operation of any shutoff means may not interfere with the later emergency operation of other equipment such as propeller feathering devices.

(4) Each shutoff must be outside of the engine compartment unless an equal degree of safety is provided with the shutoff inside the compartment.

(5) Not more than one quart of flammable fluid may escape into the engine compartment after engine shutoff. For those installations where the flammable fluid that escapes after shutdown cannot be limited to one quart, it must be demonstrated that this greater amount can be safely contained or drained overboard.

(6) There must be means to guard against inadvertent operation of each shutoff means, and to make it possible for the crew to reopen the shutoff means in flight after it has been closed.

(b) Turbine engine installations need not have an engine oil system shutoff if—

(1) The oil tank is integral with, or mounted on, the engine; and

(2) All oil system components external to the engine are fireproof or located in areas not subject to engine fire conditions.

(c) Power operated valves must have means to indicate to the flight crew when the valve has reached the selected position and must be designed so that the valve will not move from the selected position under vibration conditions likely to exist at the valve location.

[Doc. No. 4080, 29 FR 17955, Dec. 18, 1964, as amended by Amdt. 23–7, 34 FR 13096, Aug. 13, 1969; Amdt. 23–14, 38 FR 31823, Nov. 19, 1973; Amdt. 23–29, 49 FR 6847, Feb. 23, 1984; Amdt. 23–43, 58 FR 18975, Apr. 9, 1993]

### § 23.1191 Firewalls.

(a) Each engine, auxiliary power unit, fuel burning heater, and other combustion equipment, must be isolated from the rest of the airplane by firewalls, shrouds, or equivalent means.

(b) Each firewall or shroud must be constructed so that no hazardous quantity of liquid, gas, or flame can pass from the compartment created by the firewall or shroud to other parts of the airplane.

(c) Each opening in the firewall or shroud must be sealed with close fitting, fireproof grommets, bushings, or firewall fittings.

(d) [Reserved]

(e) Each firewall and shroud must be fireproof and protected against corrosion.

(f) Compliance with the criteria for fireproof materials or components must be shown as follows:

(1) The flame to which the materials or components are subjected must be 2,000 ± 150°F.

(2) Sheet materials approximately 10 inches square must be subjected to the flame from a suitable burner.

(3) The flame must be large enough to maintain the required test temperature over an area approximately five inches square.

(g) Firewall materials and fittings must resist flame penetration for at least 15 minutes.

(h) The following materials may be used in firewalls or shrouds without being tested as required by this section:

(1) Stainless steel sheet, 0.015 inch thick.

(2) Mild steel sheet (coated with aluminum or otherwise protected against corrosion) 0.018 inch thick.

(3) Terne plate, 0.018 inch thick.

(4) Monel metal, 0.018 inch thick.

(5) Steel or copper base alloy firewall fittings.

(6) Titanium sheet, 0.016 inch thick.

[Doc. No. 4080, 29 FR 17955, Dec. 18, 1964, as amended by Amdt. 23–43, 58 FR 18975, Apr. 9, 1993; 58 FR 27060, May 6, 1993; Amdt. 23–51, 61 FR 5138, Feb. 9, 1996]

### § 23.1192 Engine accessory compartment diaphragm.

For aircooled radial engines, the engine power section and all portions of the exhaust sytem must be isolated from the engine accessory compartment by a diaphragm that meets the firewall requirements of § 23.1191.

[Amdt. 23–14, 38 FR 31823, Nov. 19, 1973]

### § 23.1193 Cowling and nacelle.

(a) Each cowling must be constructed and supported so that it can resist any vibration, inertia, and air loads to which it may be subjected in operation.

(b) There must be means for rapid and complete drainage of each part of the cowling in the normal ground and flight attitudes. Drain operation may be shown by test, analysis, or both, to ensure that under normal aerodynamic pressure distribution expected in service each drain will operate as designed. No drain may discharge where it will cause a fire hazard.

(c) Cowling must be at least fire resistant.

(d) Each part behind an opening in the engine compartment cowling must be at least fire resistant for a distance of at least 24 inches aft of the opening.

(e) Each part of the cowling subjected to high temperatures due to its nearness to exhaust sytem ports or exhaust gas impingement, must be fire proof.

(f) Each nacelle of a multiengine airplane with supercharged engines must be designed and constructed so that with the landing gear retracted, a fire in the engine compartment will not burn through a cowling or nacelle and enter a nacelle area other than the engine compartment.

(g) In addition, for commuter category airplanes, the airplane must be designed so that no fire originating in any engine compartment can enter, either through openings or by burn-through, any other region where it would create additional hazards.

[Doc. No. 4080, 29 FR 17955, Dec. 18, 1964; 30 FR 258, Jan. 9, 1965, as amended by Amdt. 23–18, 42 FR 15042, Mar. 17, 1977; Amdt. 23–34, 52 FR 1833, Jan. 15, 1987; 58 FR 18975, Apr. 9, 1993]

### § 23.1195 Fire extinguishing systems.

(a) For commuter category airplanes, fire extinguishing systems must be installed and compliance shown with the following:

(1) Except for combustor, turbine, and tailpipe sections of turbine-engine installations that contain lines or components carrying flammable fluids or gases for which a fire originating in these sections is shown to be controllable, a fire extinguisher system must serve each engine compartment;

(2) The fire extinguishing system, the quantity of the extinguishing agent, the rate of discharge, and the discharge distribution must be adequate to extinguish fires. An individual ''one shot'' system may be used.

(3) The fire extinguishing system for a nacelle must be able to simultaneously protect each compartment of the nacelle for which protection is provided.

(b) If an auxiliary power unit is installed in any airplane certificated to this part, that auxiliary power unit compartment must be served by a fire extinguishing system meeting the requirements of paragraph (a)(2) of this section.

[Amdt. 23–34, 52 FR 1833, Jan. 15, 1987, as amended by Amdt. 23–43, 58 FR 18975, Apr. 9, 1993]

### § 23.1197 Fire extinguishing agents.

For commuter category airplanes, the following applies:

(a) Fire extinguishing agents must—

(1) Be capable of extinguishing flames emanating from any burning of fluids or other combustible materials in the area protected by the fire extinguishing system; and

(2) Have thermal stability over the temperature range likely to be experienced in the compartment in which they are stored.

(b) If any toxic extinguishing agent is used, provisions must be made to prevent harmful concentrations of fluid or fluid vapors (from leakage during normal operation of the airplane or as a result of discharging the fire extinguisher on the ground or in flight) from entering any personnel compartment, even though a defect may exist in the extinguishing system. This must be shown by test except for built-in carbon dioxide fuselage compartment fire extinguishing systems for which—

(1) Five pounds or less of carbon dioxide will be discharged, under established fire control procedures, into any fuselage compartment; or

(2) Protective breathing equipment is available for each flight crewmember on flight deck duty.

[Amdt. 23–34, 52 FR 1833, Jan. 15, 1987]

### § 23.1199 Extinguishing agent containers.

For commuter category airplanes, the following applies:

(a) Each extinguishing agent container must have a pressure relief to prevent bursting of the container by excessive internal pressures.

(b) The discharge end of each discharge line from a pressure relief connection must be located so that discharge of the fire extinguishing agent would not damage the airplane. The line must also be located or protected to prevent clogging caused by ice or other foreign matter.

(c) A means must be provided for each fire extinguishing agent container to indicate that the container has discharged or that the charging pressure is below the established minimum necessary for proper functioning.

(d) The temperature of each container must be maintained, under intended operating conditions, to prevent the pressure in the container from—

(1) Falling below that necessary to provide an adequate rate of discharge; or

(2) Rising high enough to cause premature discharge.

(e) If a pyrotechnic capsule is used to discharge the extinguishing agent, each container must be installed so that temperature conditions will not

cause hazardous deterioration of the pyrotechnic capsule.

[Amdt. 23–34, 52 FR 1833, Jan. 15, 1987; 52 FR 34745, Sept. 14, 1987]

### § 23.1201 Fire extinguishing system materials.

For commuter category airplanes, the following apply:

(a) No material in any fire extinguishing system may react chemically with any extinguishing agent so as to create a hazard.

(b) Each system component in an engine compartment must be fireproof.

[Amdt. 23–34, 52 FR 1833, Jan. 15, 1987; 52 FR 7262, Mar. 9, 1987]

### § 23.1203 Fire detector system.

(a) There must be means that ensure the prompt detection of a fire in—

(1) An engine compartment of—

(i) Multiengine turbine powered airplanes;

(ii) Multiengine reciprocating engine powered airplanes incorporating turbochargers;

(iii) Airplanes with engine(s) located where they are not readily visible from the cockpit; and

(iv) All commuter category airplanes.

(2) The auxiliary power unit compartment of any airplane incorporating an auxiliary power unit.

(b) Each fire detector must be constructed and installed to withstand the vibration, inertia, and other loads to which it may be subjected in operation.

(c) No fire detector may be affected by any oil, water, other fluids, or fumes that might be present.

(d) There must be means to allow the crew to check, in flight, the functioning of each fire detector electric circuit.

(e) Wiring and other components of each fire detector system in a designated fire zone must be at least fire resistant.

[Amdt. 23–18, 42 FR 15042, Mar. 17, 1977, as amended by Amdt. 23–34, 52 FR 1833, Jan. 15, 1987; Amdt. 23–43, 58 FR 18975, Apr. 9, 1993; Amdt. 23–51, 61 FR 5138, Feb. 9, 1996]

## Subpart F—Equipment

GENERAL

### § 23.1301 Function and installation.

Each item of installed equipment must—

(a) Be of a kind and design appropriate to its intended function.

(b) Be labeled as to its identification, function, or operating limitations, or any applicable combination of these factors;

(c) Be installed according to limitations specified for that equipment; and

(d) Function properly when installed.

[Amdt. 23–20, 42 FR 36968, July 18, 1977]

### § 23.1303 Flight and navigation instruments.

The following are the minimum required flight and navigation instruments:

(a) An airspeed indicator.

(b) An altimeter.

(c) A direction indicator (nonstabilized magnetic compass).

(d) For reciprocating engine-powered airplanes of more than 6,000 pounds maximum weight and turbine engine powered airplanes, a free air temperature indicator or an air-temperature indicator which provides indications that are convertible to free-air.

(e) A speed warning device for—

(1) Turbine engine powered airplanes; and

(2) Other airplanes for which $V_{MO}/M_{MO}$ and $V_D/M_D$ are established under §§ 23.335(b)(4) and 23.1505(c) if $V_{MO}/M_{MO}$ is greater than 0.8 $V_D/M_D$.

The speed warning device must give effective aural warning (differing distinctively from aural warnings used for other purposes) to the pilots whenever the speed exceeds $V_{MO}$ plus 6 knots or $M_{MO}$+0.01. The upper limit of the production tolerance for the warning device may not exceed the prescribed warning speed. The lower limit of the warning device must be set to minimize nuisance warning;

(f) When an attitude display is installed, the instrument design must not provide any means, accessible to the flightcrew, of adjusting the relative positions of the attitude reference symbol and the horizon line beyond that necessary for parallax correction.

(g) In addition, for commuter category airplanes:

(1) If airspeed limitations vary with altitude, the airspeed indicator must have a maximum allowable airspeed indicator showing the variation of $V_{MO}$ with altitude.

(2) The altimeter must be a sensitive type.

(3) Having a passenger seating configuration of 10 or more, excluding the pilot's seats and that are approved for IFR operations, a third attitude instrument must be provided that:

(i) Is powered from a source independent of the electrical generating system;

(ii) Continues reliable operation for a minimum of 30 minutes after total failure of the electrical generating system;

(iii) Operates independently of any other attitude indicating system;

(iv) Is operative without selection after total failure of the electrical generating system;

(v) Is located on the instrument panel in a position acceptable to the Administrator that will make it plainly visible to and usable by any pilot at the pilot's station; and

(vi) Is appropriately lighted during all phases of operation.

[Doc. No. 4080, 29 FR 17955, Dec. 18, 1964, as amended by Amdt. 23–17, 41 FR 55465, Dec. 20, 1976; Amdt. 23–43, 58 FR 18975, Apr. 9, 1993; Amdt. 23–49, 61 FR 5168, Feb. 9, 1996]

### § 23.1305 Powerplant instruments.

The following are required powerplant instruments:

(a) *For all airplanes.* (1) A fuel quantity indicator for each fuel tank, installed in accordance with § 23.1337(b).

(2) An oil pressure indicator for each engine.

(3) An oil temperature indicator for each engine.

(4) An oil quantity measuring device for each oil tank which meets the requirements of § 23.1337(d).

(5) A fire warning means for those airplanes required to comply with § 23.1203.

(b) *For reciprocating engine-powered airplanes.* In addition to the powerplant instruments required by paragraph (a) of this section, the following powerplant instruments are required:

(1) An induction system air temperature indicator for each engine equipped with a preheater and having induction air temperature limitations that can be exceeded with preheat.

(2) A tachometer indicator for each engine.

(3) A cylinder head temperature indicator for—

(i) Each air-cooled engine with cowl flaps;

(ii) [Reserved]

(iii) Each commuter category airplane.

(4) For each pump-fed engine, a means:

(i) That continuously indicates, to the pilot, the fuel pressure or fuel flow; or

(ii) That continuously monitors the fuel system and warns the pilot of any fuel flow trend that could lead to engine failure.

(5) A manifold pressure indicator for each altitude engine and for each engine with a controllable propeller.

(6) For each turbocharger installation:

(i) If limitations are established for either carburetor (or manifold) air inlet temperature or exhaust gas or turbocharger turbine inlet temperature, indicators must be furnished for each temperature for which the limitation is established unless it is shown that the limitation will not be exceeded in all intended operations.

(ii) If its oil system is separate from the engine oil system, oil pressure and oil temperature indicators must be provided.

(7) A coolant temperature indicator for each liquid-cooled engine.

(c) *For turbine engine-powered airplanes.* In addition to the powerplant instruments required by paragraph (a) of this section, the following powerplant instruments are required:

(1) A gas temperature indicator for each engine.

(2) A fuel flowmeter indicator for each engine.

(3) A fuel low pressure warning means for each engine.

(4) A fuel low level warning means for any fuel tank that should not be depleted of fuel in normal operations.

(5) A tachometer indicator (to indicate the speed of the rotors with established limiting speeds) for each engine.

(6) An oil low pressure warning means for each engine.

(7) An indicating means to indicate the functioning of the powerplant ice protection system for each engine.

(8) For each engine, an indicating means for the fuel strainer or filter required by § 23.997 to indicate the occurrence of contamination of the strainer or filter before it reaches the capacity established in accordance with § 23.997(d).

(9) For each engine, a warning means for the oil strainer or filter required by § 23.1019, if it has no bypass, to warn the pilot of the occurrence of contamination of the strainer or filter screen before it reaches the capacity established in accordance with § 23.1019(a)(5).

(10) An indicating means to indicate the functioning of any heater used to prevent ice clogging of fuel system components.

(d) *For turbojet/turbofan engine-powered airplanes.* In addition to the powerplant instruments required by paragraphs (a) and (c) of this section, the following powerplant instruments are required:

(1) For each engine, an indicator to indicate thrust or to indicate a parameter that can be related to thrust, including a free air temperature indicator if needed for this purpose.

(2) For each engine, a position indicating means to indicate to the flight crew when the thrust reverser, if installed, is in the reverse thrust position.

(e) *For turbopropeller-powered airplanes.* In addition to the powerplant instruments required by paragraphs (a) and (c) of this section, the following powerplant instruments are required:

(1) A torque indicator for each engine.

(2) A position indicating means to indicate to the flight crew when the propeller blade angle is below the flight low pitch position, for each propeller, unless it can be shown that such occurrence is highly improbable.

[Doc. No. 26344, 58 FR 18975, Apr. 9, 1993; 58 FR 27060, May 6, 1993; Amdt. 23–51, 61 FR 5138, Feb. 9, 1996; Amdt. 23–52, 61 FR 13644, Mar. 27, 1996]

### § 23.1307 Miscellaneous equipment.

The equipment necessary for an airplane to operate at the maximum operating altitude and in the kinds of operation and meteorological conditions for which certification is requested and is approved in accordance with § 23.1559 must be included in the type design.

[Doc. No. 4080, 29 FR 17955, Dec. 18, 1964; 30 FR 258, Jan. 9, 1965, as amended by Amdt. 23–23, 43 FR 50593, Oct. 30, 1978; Amdt. 23–43, 58 FR 18976, Apr. 9, 1993; Amdt. 23–49, 61 FR 5168, Feb. 9, 1996]

### § 23.1309 Equipment, systems, and installations.

(a) Each item of equipment, each system, and each installation:

(1) When performing its intended function, may not adversely affect the response, operation, or accuracy of any—

(i) Equipment essential to safe operation; or

(ii) Other equipment unless there is a means to inform the pilot of the effect.

(2) In a single-engine airplane, must be designed to minimize hazards to the airplane in the event of a probable malfunction or failure.

(3) In a multiengine airplane, must be designed to prevent hazards to the airplane in the event of a probable malfunction or failure.

(4) In a commuter category airplane, must be designed to safeguard against hazards to the airplane in the event of their malfunction or failure.

(b) The design of each item of equipment, each system, and each installation must be examined separately and in relationship to other airplane systems and installations to determine if the airplane is dependent upon its function for continued safe flight and landing and, for airplanes not limited to VFR conditions, if failure of a system would significantly reduce the capability of the airplane or the ability of the crew to cope with adverse operating conditions. Each item of equipment, each system, and each installation identified by this examination as one upon which the airplane is dependent for proper functioning to ensure continued safe flight and landing, or whose failure would significantly reduce the capability of the airplane or the ability

of the crew to cope with adverse operating conditions, must be designed to comply with the following additional requirements:

(1) It must perform its intended function under any foreseeable operating condition.

(2) When systems and associated components are considered separately and in relation to other systems—

(i) The occurrence of any failure condition that would prevent the continued safe flight and landing of the airplane must be extremely improbable; and

(ii) The occurrence of any other failure condition that would significantly reduce the capability of the airplane or the ability of the crew to cope with adverse operating conditions must be improbable.

(3) Warning information must be provided to alert the crew to unsafe system operating conditions and to enable them to take appropriate corrective action. Systems, controls, and associated monitoring and warning means must be designed to minimize crew errors that could create additional hazards.

(4) Compliance with the requirements of paragraph (b)(2) of this section may be shown by analysis and, where necessary, by appropriate ground, flight, or simulator tests. The analysis must consider—

(i) Possible modes of failure, including malfunctions and damage from external sources;

(ii) The probability of multiple failures, and the probability of undetected faults.;

(iii) The resulting effects on the airplane and occupants, considering the stage of flight and operating conditions; and

(iv) The crew warning cues, corrective action required, and the crew's capability of determining faults.

(c) Each item of equipment, each system, and each installation whose functioning is required by this chapter and that requires a power supply is an ''essential load'' on the power supply. The power sources and the system must be able to supply the following power loads in probable operating combinations and for probable durations:

(1) Loads connected to the power distribution system with the system functioning normally.

(2) Essential loads after failure of—

(i) Any one engine on two-engine airplanes; or

(ii) Any two engines on an airplane with three or more engines; or

(iii) Any power converter or energy storage device.

(3) Essential loads for which an alternate source of power is required, as applicable, by the operating rules of this chapter, after any failure or malfunction in any one power supply system, distribution system, or other utilization system.

(d) In determining compliance with paragraph (c)(2) of this section, the power loads may be assumed to be reduced under a monitoring procedure consistent with safety in the kinds of operations authorized. Loads not required in controlled flight need not be considered for the two-engine-inoperative condition on airplanes with three or more engines.

(e) In showing compliance with this section with regard to the electrical power system and to equipment design and installation, critical environmental and atmospheric conditions, including radio frequency energy and the effects (both direct and indirect) of lightning strikes, must be considered. For electrical generation, distribution, and utilization equipment required by or used in complying with this chapter, the ability to provide continuous, safe service under forseeable environmental conditions may be shown by environmental tests, design analysis, or reference to previous comparable service experience on other airplanes.

(f) As used in this section, ''system'' refers to all pneumatic systems, fluid systems, electrical systems, mechanical systems, and powerplant systems included in the airplane design, except for the following:

(1) Powerplant systems provided as part of the certificated engine.

(2) The flight structure (such a wing, empennage, control surfaces and their systems, the fuselage, engine mounting, and landing gear and their related

primary attachments) whose requirements are specific in subparts C and D of this part.

[Amdt. 23–41, 55 FR 43309, Oct. 26, 1990; 55 FR 47028, Nov. 8, 1990, as amended by Amdt. 23–49, 61 FR 5168, Feb. 9, 1996]

INSTRUMENTS: INSTALLATION

**§ 23.1311 Electronic display instrument systems.**

(a) Electronic display indicators, including those with features that make isolation and independence between powerplant instrument systems impractical, must:

(1) Meet the arrangement and visibility requirements of § 23.1321.

(2) Be easily legible under all lighting conditions encountered in the cockpit, including direct sunlight, considering the expected electronic display brightness level at the end of an electronic display indictor's useful life. Specific limitations on display system useful life must be contained in the Instructions for Continued Airworthiness required by § 23.1529.

(3) Not inhibit the primary display of attitude, airspeed, altitude, or powerplant parameters needed by any pilot to set power within established limitations, in any normal mode of operation.

(4) Not inhibit the primary display of engine parameters needed by any pilot to properly set or monitor powerplant limitations during the engine starting mode of operation.

(5) Have an independent magnetic direction indicator and either an independent secondary mechanical altimeter, airspeed indicator, and attitude instrument or individual electronic display indicators for the altitude, airspeed, and attitude that are independent from the airplane's primary electrical power system. These secondary instruments may be installed in panel positions that are displaced from the primary positions specified by § 23.1321(d), but must be located where they meet the pilot's visibility requirements of § 23.1321(a).

(6) Incorporate sensory cues for the pilot that are equivalent to those in the instrument being replaced by the electronic display indicators.

(7) Incorporate visual displays of instrument markings, required by §§ 23.1541 through 23.1553, or visual displays that alert the pilot to abnormal operational values or approaches to established limitation values, for each parameter required to be displayed by this part.

(b) The electronic display indicators, including their systems and installations, and considering other airplane systems, must be designed so that one display of information essential for continued safe flight and landing will remain available to the crew, without need for immediate action by any pilot for continued safe operation, after any single failure or probable combination of failures.

(c) As used in this section, ''instrument'' includes devices that are physically contained in one unit, and devices that are composed of two or more physically separate units or components connected together (such as a remote indicating gyroscopic direction indicator that includes a magnetic sensing element, a gyroscopic unit, an amplifier, and an indicator connected together). As used in this section, ''primary'' display refers to the display of a parameter that is located in the instrument panel such that the pilot looks at it first when wanting to view that parameter.

[Doc. No. 27806, 61 FR 5168, Feb. 9, 1996]

**§ 23.1321 Arrangement and visibility.**

(a) Each flight, navigation, and powerplant instrument for use by any required pilot during takeoff, initial climb, final approach, and landing must be located so that any pilot seated at the controls can monitor the airplane's flight path and these instruments with minimum head and eye movement. The powerplant instruments for these flight conditions are those needed to set power within powerplant limitations.

(b) For each multiengine airplane, identical powerplant instruments must be located so as to prevent confusion as to which engine each instrument relates.

(c) Instrument panel vibration may not damage, or impair the accuracy of, any instrument.

(d) For each airplane, the flight instruments required by § 23.1303, and, as applicable, by the operating rules of this chapter, must be grouped on the instrument panel and centered as nearly as practicable about the vertical plane of each required pilot's forward vision. In addition:

(1) The instrument that most effectively indicates the attitude must be on the panel in the top center position;

(2) The instrument that most effectively indicates airspeed must be adjacent to and directly to the left of the instrument in the top center position;

(3) The instrument that most effectively indicates altitude must be adjacent to and directly to the right of the instrument in the top center position;

(4) The instrument that most effectively indicates direction of flight, other than the magnetic direction indicator required by § 23.1303(c), must be adjacent to and directly below the instrument in the top center position; and

(5) Electronic display indicators may be used for compliance with paragraphs (d)(1) through (d)(4) of this section when such displays comply with requirements in § 23.1311.

(e) If a visual indicator is provided to indicate malfunction of an instrument, it must be effective under all probable cockpit lighting conditions.

[Doc. No. 4080, 29 FR 17955, Dec. 18, 1964, as amended by Amdt. 23–14, 38 FR 31824, Nov. 19, 1973; Amdt. 23–20, 42 FR 36968, July 18, 1977; Amdt. 23–41, 55 FR 43310, Oct. 26, 1990; 55 FR 46888, Nov. 7, 1990; Amdt. 23–49, 61 FR 5168, Feb. 9, 1996]

### § 23.1322 Warning, caution, and advisory lights.

If warning, caution, or advisory lights are installed in the cockpit, they must, unless otherwise approved by the Administrator, be—

(a) Red, for warning lights (lights indicating a hazard which may require immediate corrective action);

(b) Amber, for caution lights (lights indicating the possible need for future corrective action);

(c) Green, for safe operation lights; and

(d) Any other color, including white, for lights not described in paragraphs (a) through (c) of this section, provided the color differs sufficiently from the colors prescribed in paragraphs (a) through (c) of this section to avoid possible confusion.

(e) Effective under all probable cockpit lighting conditions.

[Amdt. 23–17, 41 FR 55465, Dec. 20, 1976, as amended by Amdt. 23–43, 58 FR 18976, Apr. 9, 1993]

### § 23.1323 Airspeed indicating system.

(a) Each airspeed indicating instrucment must be calibrated to indicate true airspeed (at sea level with a standard atmosphere) with a minimum practicable instrument calibration error when the corresponding pitot and static pressures are applied.

(b) Each airspeed system must be calibrated in flight to determine the system error. The system error, including position error, but excluding the airspeed indicator instrument calibration error, may not exceed three percent of the calibrated airspeed or five knots, whichever is greater, throughout the following speed ranges:

(1) 1.3 $V_{S1}$ to $V_{MO}/M_{MO}$ or $V_{NE}$, whichever is appropriate with flaps retracted.

(2) 1.3 $V_{S1}$ to $V_{FE}$ with flaps extended.

(c) The design and installation of each airspeed indicating system must provide positive drainage of moisture from the pitot static plumbing.

(d) If certification for instrument flight rules or flight in icing conditions is requested, each airspeed system must have a heated pitot tube or an equivalent means of preventing malfunction due to icing.

(e) In addition, for commuter category airplanes, the airspeed indicating system must be calibrated to determine the system error during the accelerate-takeoff ground run. The ground run calibration must be obtained between 0.8 of the minimum value of $V_1$, and 1.2 times the maximum value of $V_1$ considering the approved ranges of altitude and weight. The ground run calibration must be determined assuming an engine failure at the minimum value of $V_1$.

(f) For commuter category airplanes, where duplicate airspeed indicators are required, their respective pitot tubes

must be far enough apart to avoid damage to both tubes in a collision with a bird.

[Amdt. 23–20, 42 FR 36968, July 18, 1977, as amended by Amdt. 23–34, 52 FR 1834, Jan. 15, 1987; 52 FR 34745, Sept. 14, 1987; Amdt. 23–42, 56 FR 354, Jan. 3, 1991; Amdt. 23–49, 61 FR 5168, Feb. 9, 1996]

### § 23.1325 Static pressure system.

(a) Each instrument provided with static pressure case connections must be so vented that the influence of airplane speed, the opening and closing of windows, airflow variations, moisture, or other foreign matter will least affect the accuracy of the instruments except as noted in paragraph (b)(3) of this section.

(b) If a static pressure system is necessary for the functioning of instruments, systems, or devices, it must comply with the provisions of paragraphs (b)(1) through (3) of this section.

(1) The design and installation of a static pressure system must be such that—

(i) Positive drainage of moisture is provided;

(ii) Chafing of the tubing, and excessive distortion or restriction at bends in the tubing, is avoided; and

(iii) The materials used are durable, suitable for the purpose intended, and protected against corrosion.

(2) A proof test must be conducted to demonstrate the integrity of the static pressure system in the following manner:

(i) *Unpressurized airplanes.* Evacuate the static pressure system to a pressure differential of approximately 1 inch of mercury or to a reading on the altimeter, 1,000 feet above the aircraft elevation at the time of the test. Without additional pumping for a period of 1 minute, the loss of indicated altitude must not exceed 100 feet on the altimeter.

(ii) *Pressurized airplanes.* Evacuate the static pressure system until a pressure differential equivalent to the maximum cabin pressure differential for which the airplane is type certificated is achieved. Without additional pumping for a period of 1 minute, the loss of indicated altitude must not exceed 2 percent of the equivalent altitude of the maximum cabin differential pressure or 100 feet, whichever is greater.

(3) If a static pressure system is provided for any instrument, device, or system required by the operating rules of this chapter, each static pressure port must be designed or located in such a manner that the correlation between air pressure in the static pressure system and true ambient atmospheric static pressure is not altered when the airplane encounters icing conditions. An antiicing means or an alternate source of static pressure may be used in showing compliance with this requirement. If the reading of the altimeter, when on the alternate static pressure system differs from the reading of the altimeter when on the primary static system by more than 50 feet, a correction card must be provided for the alternate static system.

(c) Except as provided in paragraph (d) of this section, if the static pressure system incorporates both a primary and an alternate static pressure source, the means for selecting one or the other source must be designed so that—

(1) When either source is selected, the other is blocked off; and

(2) Both sources cannot be blocked off simultaneously.

(d) For unpressurized airplanes, paragraph (c)(1) of this section does not apply if it can be demonstrated that the static pressure system calibration, when either static pressure source is selected, is not changed by the other static pressure source being open or blocked.

(e) Each static pressure system must be calibrated in flight to determine the system error. The system error, in indicated pressure altitude, at sea-level, with a standard atmosphere, excluding instrument calibration error, may not exceed ±30 feet per 100 knot speed for the appropriate configuration in the speed range between 1.3 $V_{S0}$ with flaps extended, and 1.8 $V_{S1}$ with flaps retracted. However, the error need not be less than 30 feet.

(f) [Reserved]

(g) For airplanes prohibited from flight in instrument meteorological or icing conditions, in accordance with

§ 23.1559(b) of this part, paragraph (b)(3) of this section does not apply.

[Amdt. 23–1, 30 FR 8261, June 29, 1965, as amended by Amdt. 23–6, 32 FR 7586, May 24, 1967; 32 FR 13505, Sept. 27, 1967; 32 FR 13714, Sept. 30, 1967; Amdt. 23–20, 42 FR 36968, July 18, 1977; Amdt. 23–34, 52 FR 1834, Jan. 15, 1987; Amdt. 23–42, 56 FR 354, Jan. 3, 1991; Amdt. 23–49, 61 FR 5169, Feb. 9, 1996; Amdt. 23–50, 61 FR 5192, Feb. 9, 1996]

### § 23.1326 Pitot heat indication systems.

If a flight instrument pitot heating system is installed to meet the requirements specified in § 23.1323(d), an indication system must be provided to indicate to the flight crew when that pitot heating system is not operating. The indication system must comply with the following requirements:

(a) The indication provided must incorporate an amber light that is in clear view of a flightcrew member.

(b) The indication provided must be designed to alert the flight crew if either of the following conditions exist:

(1) The pitot heating system is switched ''off.''

(2) The pitot heating system is switched ''on'' and any pitot tube heating element is inoperative.

[Doc. No. 27806, 61 FR 5169, Feb. 9, 1996]

### § 23.1327 Magnetic direction indicator.

(a) Except as provided in paragraph (b) of this section—

(1) Each magnetic direction indicator must be installed so that its accuracy is not excessively affected by the airplane's vibration or magnetic fields; and

(2) The compensated installation may not have a deviation in level flight, greater than ten degrees on any heading.

(b) A magnetic nonstabilized direction indicator may deviate more than ten degrees due to the operation of electrically powered systems such as electrically heated windshields if either a magnetic stabilized direction indicator, which does not have a deviation in level flight greater than ten degrees on any heading, or a gyroscopic direction indicator, is installed. Deviations of a magnetic nonstabilized direction indicator of more than 10 degrees must be placarded in accordance with § 23.1547(e).

[Amdt. 23–20, 42 FR 36969, July 18, 1977]

### § 23.1329 Automatic pilot system.

If an automatic pilot system is installed, it must meet the following:

(a) Each system must be designed so that the automatic pilot can—

(1) Be quickly and positively disengaged by the pilots to prevent it from interfering with their control of the airplane; or

(2) Be sufficiently overpowered by one pilot to let him control the airplane.

(b) If the provisions of paragraph (a)(1) of this section are applied, the quick release (emergency) control must be located on the control wheel (both control wheels if the airplane can be operated from either pilot seat) on the side opposite the throttles, or on the stick control, (both stick controls, if the airplane can be operated from either pilot seat) such that it can be operated without moving the hand from its normal position on the control.

(c) Unless there is automatic synchronization, each system must have a means to readily indicate to the pilot the alignment of the actuating device in relation to the control system it operates.

(d) Each manually operated control for the system operation must be readily accessible to the pilot. Each control must operate in the same plane and sense of motion as specified in § 23.779 for cockpit controls. The direction of motion must be plainly indicated on or near each control.

(e) Each system must be designed and adjusted so that, within the range of adjustment available to the pilot, it cannot produce hazardous loads on the airplane or create hazardous deviations in the flight path, under any flight condition appropriate to its use, either during normal operation or in the event of a malfunction, assuming that corrective action begins within a reasonable period of time.

(f) Each system must be designed so that a single malfunction will not produce a hardover signal in more than one control axis. If the automatic pilot integrates signals from auxiliary controls or furnishes signals for operation

of other equipment, positive interlocks and sequencing of engagement to prevent improper operation are required.

(g) There must be protection against adverse interaction of integrated components, resulting from a malfunction.

(h) If the automatic pilot system can be coupled to airborne navigation equipment, means must be provided to indicate to the flight crew the current mode of operation. Selector switch position is not acceptable as a means of indication.

[Doc. No. 4080, 29 FR 17955, Dec. 18, 1964; 30 FR 258, Jan. 9, 1965, as amended by Amdt. 23–23, 43 FR 50593, Oct. 30, 1978; Amdt. 23–43, 58 FR 18976, Apr. 9, 1993; Amdt. 23–49, 61 FR 5169, Feb. 9, 1996]

### § 23.1331 Instruments using a power source.

For each instrument that uses a power source, the following apply:

(a) Each instrument must have an integral visual power annunciator or separate power indicator to indicate when power is not adequate to sustain proper instrument performance. If a separate indicator is used, it must be located so that the pilot using the instruments can monitor the indicator with minimum head and eye movement. The power must be sensed at or near the point where it enters the instrument. For electric and vacuum/pressure instruments, the power is considered to be adequate when the voltage or the vacuum/pressure, respectively, is within approved limits.

(b) The installation and power supply systems must be designed so that—

(1) The failure of one instrument will not interfere with the proper supply of energy to the remaining instrument; and

(2) The failure of the energy supply from one source will not interfere with the proper supply of energy from any other source.

(c) There must be at least two independent sources of power (not driven by the same engine on multiengine airplanes), and a manual or an automatic means to select each power source.

[Doc. No. 26344, 58 FR 18976, Apr. 9, 1993]

### § 23.1335 Flight director systems.

If a flight director system is installed, means must be provided to indicate to the flight crew its current mode of operation. Selector switch position is not acceptable as a means of indication.

[Amdt. 23–20, 42 FR 36969, July 18, 1977]

### § 23.1337 Powerplant instruments installation.

(a) *Instruments and instrument lines.*

(1) Each powerplant and auxiliary power unit instrument line must meet the requirements of § 23.993.

(2) Each line carrying flammable fluids under pressure must—

(i) Have restricting orifices or other safety devices at the source of pressure to prevent the escape of excessive fluid if the line fails; and

(ii) Be installed and located so that the escape of fluids would not create a hazard.

(3) Each powerplant and auxiliary power unit instrument that utilizes flammable fluids must be installed and located so that the escape of fluid would not create a hazard.

(b) *Fuel quantity indication.* There must be a means to indicate to the flightcrew members the quantity of usable fuel in each tank during flight. An indicator calibrated in appropriate units and clearly marked to indicate those units must be used. In addition:

(1) Each fuel quantity indicator must be calibrated to read ''zero'' during level flight when the quantity of fuel remaining in the tank is equal to the unusable fuel supply determined under § 23.959(a);

(2) Each exposed sight gauge used as a fuel quantity indicator must be protected against damage;

(3) Each sight gauge that forms a trap in which water can collect and freeze must have means to allow drainage on the ground;

(4) There must be a means to indicate the amount of usable fuel in each tank when the airplane is on the ground (such as by a stick gauge);

(5) Tanks with interconnected outlets and airspaces may be considered as one tank and need not have separate indicators; and

(6) No fuel quantity indicator is required for an auxiliary tank that is used only to transfer fuel to other tanks if the relative size of the tank,

the rate of fuel transfer, and operating instructions are adequate to—

(i) Guard against overflow; and

(ii) Give the flight crewmembers prompt warning if transfer is not proceeding as planned.

(c) *Fuel flowmeter system.* If a fuel flowmeter system is installed, each metering component must have a means to by-pass the fuel supply if malfunctioning of that component severely restricts fuel flow.

(d) *Oil quantity indicator.* There must be a means to indicate the quantity of oil in each tank—

(1) On the ground (such as by a stick gauge); and

(2) In flight, to the flight crew members, if there is an oil transfer system or a reserve oil supply system.

[Doc. No. 4080, 29 FR 17955, Dec. 18, 1964, as amended by Amdt. 23–7, 34 FR 13096, Aug. 13, 1969; Amdt. 23–18, 42 FR 15042, Mar. 17, 1977; Amdt. 23–43, 58 FR 18976, Apr. 9, 1993; Amdt. 23–51, 61 FR 5138, Feb. 9, 1996; Amdt. 23–49, 61 FR 5169, Feb. 9, 1996]

ELECTRICAL SYSTEMS AND EQUIPMENT

### § 23.1351 General.

(a) *Electrical system capacity.* Each electrical system must be adequate for the intended use. In addition—

(1) Electric power sources, their transmission cables, and their associated control and protective devices, must be able to furnish the required power at the proper voltage to each load circuit essential for safe operation; and

(2) Compliance with paragraph (a)(1) of this section must be shown as follows—

(i) For normal, utility, and acrobatic category airplanes, by an electrical load analysis or by electrical measurements that account for the electrical loads applied to the electrical system in probable combinations and for probable durations; and

(ii) For commuter category airplanes, by an electrical load analysis that accounts for the electrical loads applied to the electrical system in probable combinations and for probable durations.

(b) *Function.* For each electrical system, the following apply:

(1) Each system, when installed, must be—

(i) Free from hazards in itself, in its method of operation, and in its effects on other parts of the airplane;

(ii) Protected from fuel, oil, water, other detrimental substances, and mechanical damage; and

(iii) So designed that the risk of electrical shock to crew, passengers, and ground personnel is reduced to a minimum.

(2) Electric power sources must function properly when connected in combination or independently.

(3) No failure or malfunction of any electric power source may impair the ability of any remaining source to supply load circuits essential for safe operation.

(4) In addition, for commuter category airplanes, the following apply:

(i) Each system must be designed so that essential load circuits can be supplied in the event of reasonably probable faults or open circuits including faults in heavy current carrying cables;

(ii) A means must be accessible in flight to the flight crewmembers for the individual and collective disconnection of the electrical power sources from the system;

(iii) The system must be designed so that voltage and frequency, if applicable, at the terminals of all essential load equipment can be maintained within the limits for which the equipment is designed during any probable operating conditions;

(iv) If two independent sources of electrical power for particular equipment or systems are required, their electrical energy supply must be ensured by means such as duplicate electrical equipment, throwover switching, or multichannel or loop circuits separately routed; and

(v) For the purpose of complying with paragraph (b)(5) of this section, the distribution system includes the distribution busses, their associated feeders, and each control and protective device.

(c) *Generating system.* There must be at least one generator/alternator if the electrical system supplies power to load circuits essential for safe operation. In addition—

(1) Each generator/alternator must be able to deliver its continuous rated

power, or such power as is limited by its regulation system.

(2) Generator/alternator voltage control equipment must be able to dependably regulate the generator/alternator output within rated limits.

(3) Automatic means must be provided to prevent damage to any generator/alternator and adverse effects on the airplane electrical system due to reverse current. A means must also be provided to disconnect each generator/alternator from the battery and other generators/alternators.

(4) There must be a means to give immediate warning to the flight crew of a failure of any generator/alternator.

(5) Each generator/alternator must have an overvoltage control designed and installed to prevent damage to the electrical system, or to equipment supplied by the electrical system that could result if that generator/alternator were to develop an overvoltage condition.

(d) *Instruments.* A means must exist to indicate to appropriate flight crewmembers the electric power system quantities essential for safe operation.

(1) For normal, utility, and acrobatic category airplanes with direct current systems, an ammeter that can be switched into each generator feeder may be used and, if only one generator exists, the ammeter may be in the battery feeder.

(2) For commuter category airplanes, the essential electric power system quantities include the voltage and current supplied by each generator.

(e) *Fire resistance.* Electrical equipment must be so designed and installed that in the event of a fire in the engine compartment, during which the surface of the firewall adjacent to the fire is heated to 2,000° F for 5 minutes or to a lesser temperature substantiated by the applicant, the equipment essential to continued safe operation and located behind the firewall will function satisfactorily and will not create an additional fire hazard.

(f) *External power.* If provisions are made for connecting external power to the airplane, and that external power can be electrically connected to equipment other than that used for engine starting, means must be provided to ensure that no external power supply having a reverse polarity, or a reverse phase sequence, can supply power to the airplane's electrical system. The external power connection must be located so that its use will not result in a hazard to the airplane or ground personnel.

(g) It must be shown by analysis, tests, or both, that the airplane can be operated safely in VFR conditions, for a period of not less than five minutes, with the normal electrical power (electrical power sources excluding the battery and any other standby electrical sources) inoperative, with critical type fuel (from the standpoint of flameout and restart capability), and with the airplane initially at the maximum certificated altitude. Parts of the electrical system may remain on if—

(1) A single malfunction, including a wire bundle or junction box fire, cannot result in loss of the part turned off and the part turned on; and

(2) The parts turned on are electrically and mechanically isolated from the parts turned off.

[Doc. No. 4080, 29 FR 17955, Dec. 18, 1964, as amended by Amdt. 23–7, 34 FR 13096, Aug. 13, 1969; Amdt. 23–14, 38 FR 31824, Nov. 19, 1973; Amdt. 23–17, 41 FR 55465, Dec. 20, 1976; Amdt. 23–20, 42 FR 36969, July 18, 1977; Amdt. 23–34, 52 FR 1834, Jan. 15, 1987; 52 FR 34745, Sept. 14, 1987; Amdt. 23–43, 58 FR 18976, Apr. 9, 1993; Amdt. 23–49, 61 FR 5169, Feb. 9, 1996]

### § 23.1353 Storage battery design and installation.

(a) Each storage battery must be designed and installed as prescribed in this section.

(b) Safe cell temperatures and pressures must be maintained during any probable charging and discharging condition. No uncontrolled increase in cell temperature may result when the battery is recharged (after previous complete discharge)—

(1) At maximum regulated voltage or power;

(2) During a flight of maximum duration; and

(3) Under the most adverse cooling condition likely to occur in service.

(c) Compliance with paragraph (b) of this section must be shown by tests unless experience with similar batteries and installations has shown that maintaining safe cell temperatures and pressures presents no problem.

(d) No explosive or toxic gases emitted by any battery in normal operation, or as the result of any probable malfunction in the charging system or battery installation, may accumulate in hazardous quantities within the airplane.

(e) No corrosive fluids or gases that may escape from the battery may damage surrounding structures or adjacent essential equipment.

(f) Each nickel cadmium battery installation capable of being used to start an engine or auxiliary power unit must have provisions to prevent any hazardous effect on structure or essential systems that may be caused by the maximum amount of heat the battery can generate during a short circuit of the battery or of its individual cells.

(g) Nickel cadmium battery installations capable of being used to start an engine or auxiliary power unit must have—

(1) A system to control the charging rate of the battery automatically so as to prevent battery overheating;

(2) A battery temperature sensing and over-temperature warning system with a means for disconnecting the battery from its charging source in the event of an over-temperature condition; or

(3) A battery failure sensing and warning system with a means for disconnecting the battery from its charging source in the event of battery failure.

(h) In the event of a complete loss of the primary electrical power generating system, the battery must be capable of providing at least 30 minutes of electrical power to those loads that are essential to continued safe flight and landing. The 30 minute time period includes the time needed for the pilots to recognize the loss of generated power and take appropriate load shedding action.

[Doc. No. 4080, 29 FR 17955, Dec. 18, 1964; 30 FR 258, Jan. 9, 1965, as amended by Amdt. 23–20, 42 FR 36969, July 18, 1977; Amdt. 23–21, 43 FR 2319, Jan. 16, 1978; Amdt. 23–49, 61 FR 5169, Feb. 9, 1996]

### § 23.1357 Circuit protective devices.

(a) Protective devices, such as fuses or circuit breakers, must be installed in all electrical circuits other than—

(1) Main circuits of starter motors used during starting only; and

(2) Circuits in which no hazard is presented by their omission.

(b) A protective device for a circuit essential to flight safety may not be used to protect any other circuit.

(c) Each resettable circuit protective device (''trip free'' device in which the tripping mechanism cannot be overridden by the operating control) must be designed so that—

(1) A manual operation is required to restore service after tripping; and

(2) If an overload or circuit fault exists, the device will open the circuit regardless of the position of the operating control.

(d) If the ability to reset a circuit breaker or replace a fuse is essential to safety in flight, that circuit breaker or fuse must be so located and identified that it can be readily reset or replaced in flight.

(e) For fuses identified as replaceable in flight—

(1) There must be one spare of each rating or 50 percent spare fuses of each rating, whichever is greater; and

(2) The spare fuse(s) must be readily accessible to any required pilot.

[Doc. No. 4080, 29 FR 17955, Dec. 18, 1964; 30 FR 258, Jan. 9, 1965, as amended by Amdt. 23–20, 42 FR 36969, July 18, 1977]; Amdt. 23–43, 58 FR 18976, Apr. 9, 1993

### § 23.1359 Electrical system fire protection.

(a) Each component of the electrical system must meet the applicable fire protection requirements of §§ 23.863 and 23.1182.

(b) Electrical cables, terminals, and equipment in designated fire zones that are used during emergency procedures must be fire-resistant.

(c) Insulation on electrical wire and electrical cable must be self-extinguishing when tested at an angle of 60 degrees in accordance with the applicable portions of appendix F of this part, or other approved equivalent methods. The average burn length must not exceed 3 inches (76 mm) and the average flame time after removal of the flame source must not exceed 30 seconds. Drippings from the test specimen must

not continue to flame for more than an average of 3 seconds after falling.

[Doc. No. 27806, 61 FR 5169, Feb. 9, 1996]

### § 23.1361 Master switch arrangement.

(a) There must be a master switch arrangement to allow ready disconnection of each electric power source from power distribution systems, except as provided in paragraph (b) of this section. The point of disconnection must be adjacent to the sources controlled by the switch arrangement. If separate switches are incorporated into the master switch arrangement, a means must be provided for the switch arrangement to be operated by one hand with a single movement.

(b) Load circuits may be connected so that they remain energized when the master switch is open, if the circuits are isolated, or physically shielded, to prevent their igniting flammable fluids or vapors that might be liberated by the leakage or rupture of any flammable fluid system; and

(1) The circuits are required for continued operation of the engine; or

(2) The circuits are protected by circuit protective devices with a rating of five amperes or less adjacent to the electric power source.

(3) In addition, two or more circuits installed in accordance with the requirements of paragraph (b)(2) of this section must not be used to supply a load of more than five amperes.

(c) The master switch or its controls must be so installed that the switch is easily discernible and accessible to a crewmember.

[Doc. No. 4080, 29 FR 17955, Dec. 18, 1964; 30 FR 258, Jan. 9, 1965, as amended by Amdt. 23–20, 42 FR 36969, July 18, 1977; Amdt. 23–43, 58 FR 18977, Apr. 9, 1993; Amdt. 23–49, 61 FR 5169, Feb. 9, 1996]

### § 23.1365 Electric cables and equipment.

(a) Each electric connecting cable must be of adequate capacity.

(b) Any equipment that is associated with any electrical cable installation and that would overheat in the event of circuit overload or fault must be flame resistant. That equipment and the electrical cables must not emit dangerous quantities of toxic fumes.

(c) Main power cables (including generator cables) in the fuselage must be designed to allow a reasonable degree of deformation and stretching without failure and must—

(1) Be separated from flammable fluid lines; or

(2) Be shrouded by means of electrically insulated flexible conduit, or equivalent, which is in addition to the normal cable insulation.

(d) Means of identification must be provided for electrical cables, terminals, and connectors.

(e) Electrical cables must be installed such that the risk of mechanical damage and/or damage cased by fluids vapors, or sources of heat, is minimized.

(f) Where a cable cannot be protected by a circuit protection device or other overload protection, it must not cause a fire hazard under fault conditions.

[Doc. No. 4080, 29 FR 17955, Dec. 18, 1964, as amended by Amdt. 23–14, 38 FR 31824, Nov. 19, 1973; Amdt. 23–43, 58 FR 18977, Apr. 9, 1993; Amdt. 23–49, 61 FR 5169, Feb. 9, 1996]

### § 23.1367 Switches.

Each switch must be—

(a) Able to carry its rated current;

(b) Constructed with enough distance or insulating material between current carrying parts and the housing so that vibration in flight will not cause shorting;

(c) Accessible to appropriate flight crewmembers; and

(d) Labeled as to operation and the circuit controlled.

## LIGHTS

### § 23.1381 Instrument lights.

The instrument lights must—

(a) Make each instrument and control easily readable and discernible;

(b) Be installed so that their direct rays, and rays reflected from the windshield or other surface, are shielded from the pilot's eyes; and

(c) Have enough distance or insulating material between current carrying parts and the housing so that vibration in flight will not cause shorting.

A cabin dome light is not an instrument light.

**§ 23.1383 Taxi and landing lights.**

Each taxi and landing light must be designed and installed so that:

(a) No dangerous glare is visible to the pilots.

(b) The pilot is not seriously affected by halation.

(c) It provides enough light for night operations.

(d) It does not cause a fire hazard in any configuration.

[Doc. No. 27806, 61 FR 5169, Feb. 9, 1996]

**§ 23.1385 Position light system installation.**

(a) *General.* Each part of each position light system must meet the applicable requirements of this section and each system as a whole must meet the requirements of §§ 23.1387 through 23.1397.

(b) *Left and right position lights.* Left and right position lights must consist of a red and a green light spaced laterally as far apart as practicable and installed on the airplane such that, with the airplane in the normal flying position, the red light is on the left side and the green light is on the right side.

(c) *Rear position light.* The rear position light must be a white light mounted as far aft as practicable on the tail or on each wing tip.

(d) *Light covers and color filters.* Each light cover or color filter must be at least flame resistant and may not change color or shape or lose any appreciable light transmission during normal use.

[Doc. No. 4080, 29 FR 17955, Dec. 18, 1964, as amended by Amdt. 23–17, 41 FR 55465, Dec. 20, 1976; Amdt. 23–43, 58 FR 18977, Apr. 9, 1993]

**§ 23.1387 Position light system dihedral angles.**

(a) Except as provided in paragraph (e) of this section, each position light must, as installed, show unbroken light within the dihedral angles described in this section.

(b) Dihedral angle *L* (left) is formed by two intersecting vertical planes, the first parallel to the longitudinal axis of the airplane, and the other at 110 degrees to the left of the first, as viewed when looking forward along the longitudinal axis.

(c) Dihedral angle *R* (right) is formed by two intersecting vertical planes, the first parallel to the longitudinal axis of the airplane, and the other at 110 degrees to the right of the first, as viewed when looking forward along the longitudinal axis.

(d) Dihedral angle *A* (aft) is formed by two intersecting vertical planes making angles of 70 degrees to the right and to the left, respectively, to a vertical plane passing through the longitudinal axis, as viewed when looking aft along the longitudinal axis.

(e) If the rear position light, when mounted as far aft as practicable in accordance with § 23.1385(c), cannot show unbroken light within dihedral angle A (as defined in paragraph (d) of this section), a solid angle or angles of obstructed visibility totaling not more than 0.04 steradians is allowable within that dihedral angle, if such solid angle is within a cone whose apex is at the rear position light and whose elements make an angle of 30° with a vertical line passing through the rear position light.

[Doc. No. 4080, 29 FR 17955, Dec. 18, 1964; 30 FR 258, Jan. 9, 1965, as amended by Amdt. 23–12, 36 FR 21278, Nov. 5, 1971; Amdt. 23–43, 58 FR 18977, Apr. 9, 1993]

**§ 23.1389 Position light distribution and intensities.**

(a) *General.* The intensities prescribed in this section must be provided by new equipment with each light cover and color filter in place. Intensities must be determined with the light source operating at a steady value equal to the average luminous output of the source at the normal operating voltage of the airplane. The light distribution and intensity of each position light must meet the requirements of paragraph (b) of this section.

(b) *Position lights.* The light distribution and intensities of position lights must be expressed in terms of minimum intensities in the horizontal plane, minimum intensities in any vertical plane, and maximum intensities in overlapping beams, within dihedral angles *L*, *R*, and *A*, and must meet the following requirements:

(1) *Intensities in the horizontal plane.* Each intensity in the horizontal plane (the plane containing the longitudinal

axis of the airplane and perpendicular to the plane of symmetry of the airplane) must equal or exceed the values in § 23.1391.

(2) *Intensities in any vertical plane.* Each intensity in any vertical plane (the plane perpendicular to the horizontal plane) must equal or exceed the appropriate value in § 23.1393, where *I* is the minimum intensity prescribed in § 23.1391 for the corresponding angles in the horizontal plane.

(3) *Intensities in overlaps between adjacent signals.* No intensity in any overlap between adjacent signals may exceed the values in § 23.1395, except that higher intensities in overlaps may be used with main beam intensities substantially greater than the minima specified in §§ 23.1391 and 23.1393, if the overlap intensities in relation to the main beam intensities do not adversely affect signal clarity. When the peak intensity of the left and right position lights is more than 100 candles, the maximum overlap intensities between them may exceed the values in § 23.1395 if the overlap intensity in Area A is not more than 10 percent of peak position light intensity and the overlap intensity in Area B is not more than 2.5 percent of peak position light intensity.

(c) *Rear position light installation.* A single rear position light may be installed in a position displaced laterally from the plane of symmetry of an airplane if—

(1) The axis of the maximum cone of illumination is parallel to the flight path in level flight; and

(2) There is no obstruction aft of the light and between planes 70 degrees to the right and left of the axis of maximum illumination.

[Doc. No. 4080, 29 FR 17955, Dec. 18, 1964, as amended by Amdt. 23–43, 58 FR 18977, Apr. 9, 1993]

### § 23.1391 Minimum intensities in the horizontal plane of position lights.

Each position light intensity must equal or exceed the applicable values in the following table:

| Dihedral angle (light included) | Angle from right or left of longitudinal axis, measured from dead ahead | Intensity (candles) |
|---|---|---|
| *L* and *R* (red and green) | 0° to 10° | 40 |
| | 10° to 20° | 30 |
| | 20° to 110° | 5 |
| *A* (rear white) | 110° to 180° | 20 |

[Doc. No. 4080, 29 FR 17955, Dec. 18, 1964, as amended by Amdt. 23–43, 58 FR 18977, Apr. 9, 1993]

### § 23.1393 Minimum intensities in any vertical plane of position lights.

Each position light intensity must equal or exceed the applicable values in the following table:

| Angle above or below the horizontal plane | Intensity, *I* |
|---|---|
| 0° | 1.00 |
| 0° to 5° | 0.90 |
| 5° to 10° | 0.80 |
| 10° to 15° | 0.70 |
| 15° to 20° | 0.50 |
| 20° to 30° | 0.30 |
| 30° to 40° | 0.10 |
| 40° to 90° | 0.05 |

[Doc. No. 4080, 29 FR 17955, Dec. 18, 1964, as amended by Amdt. 23–43, 58 FR 18977, Apr. 9, 1993]

### § 23.1395 Maximum intensities in overlapping beams of position lights.

No position light intensity may exceed the applicable values in the following equal or exceed the applicable values in § 23.1389(b)(3):

| Overlaps | Maximum intensity | |
|---|---|---|
| | Area A (candles) | Area B (candles) |
| Green in dihedral angle *L* | 10 | 1 |
| Red in dihedral angle *R* | 10 | 1 |
| Green in dihedral angle *A* | 5 | 1 |
| Red in dihedral angle *A* | 5 | 1 |
| Rear white in dihedral angle *L* | 5 | 1 |
| Rear white in dihedral angle *R* | 5 | 1 |

Where—

(a) Area A includes all directions in the adjacent dihedral angle that pass through the light source and intersect the common boundary plane at more than 10 degrees but less than 20 degrees; and

(b) Area B includes all directions in the adjacent dihedral angle that pass through the light source and intersect

the common boundary plane at more than 20 degrees.

[Doc. No. 4080, 29 FR 17955, Dec. 18, 1964, as amended by Amdt. 23–43, 58 FR 18977, Apr. 9, 1993]

### § 23.1397 Color specifications.

Each position light color must have the applicable International Commission on Illumination chromaticity coordinates as follows:

(a) *Aviation red*—

''$y$'' is not greater than 0.335; and
''$z$'' is not greater than 0.002.

(b) *Aviation green*—

''$x$'' is not greater than $0.440-0.320\ y$;
''$x$'' is not greater than $y-0.170$; and
''$y$'' is not less than $0.390-0.170\ x$.

(c) *Aviation white*—

''$x$'' is not less than 0.300 and not greater than 0.540;
''$y$'' is not less than ''$x-0.040$'' or ''$y_0-0.010$,'' whichever is the smaller; and
''$y$'' is not greater than ''$x+0.020$'' nor ''$0.636-0.400\ x$'';

Where ''$y_0$'' is the ''$y$'' coordinate of the Planckian radiator for the value of ''$x$'' considered.

[Doc. No. 4080, 29 FR 17955, Dec. 18, 1964, amended by Amdt. 23–11, 36 FR 12971, July 10, 1971]

### § 23.1399 Riding light.

(a) Each riding (anchor) light required for a seaplane or amphibian, must be installed so that it can—

(1) Show a white light for at least two miles at night under clear atmospheric conditions; and

(2) Show the maximum unbroken light practicable when the airplane is moored or drifting on the water.

(b) Externally hung lights may be used.

### § 23.1401 Anticollision light system.

(a) *General.* The airplane must have an anticollision light system that:

(1) Consists of one or more approved anticollision lights located so that their light will not impair the flight crewmembers' vision or detract from the conspicuity of the position lights; and

(2) Meets the requirements of paragraphs (b) through (f) of this section.

(b) *Field of coverage.* The system must consist of enough lights to illuminate the vital areas around the airplane, considering the physical configuration and flight characteristics of the airplane. The field of coverage must extend in each direction within at least 75 degrees above and 75 degrees below the horizontal plane of the airplane, except that there may be solid angles of obstructed visibility totaling not more than 0.5 steradians.

(c) *Flashing characteristics.* The arrangement of the system, that is, the number of light sources, beam width, speed of rotation, and other characteristics, must give an effective flash frequency of not less than 40, nor more than 100, cycles per minute. The effective flash frequency is the frequency at which the airplane's complete anticollision light system is observed from a distance, and applies to each sector of light including any overlaps that exist when the system consists of more than one light source. In overlaps, flash frequencies may exceed 100, but not 180, cycles per minute.

(d) *Color.* Each anticollision light must be either aviation red or aviation white and must meet the applicable requirements of § 23.1397.

(e) *Light intensity.* The minimum light intensities in any vertical plane, measured with the red filter (if used) and expressed in terms of ''effective'' intensities, must meet the requirements of paragraph (f) of this section. The following relation must be assumed:

$$I_e = \frac{\int_{t_1}^{t_2} I(t)dt}{0.2+\left(t_2-t_1\right)}$$

where:

$I_e$ =effective intensity (candles).
$I(t)$ =instantaneous intensity as a function of time.
$t_2-t_1$ =flash time interval (seconds).

Normally, the maximum value of effective intensity is obtained when $t_2$ and $t_1$ are chosen so that the effective intensity is equal to the instantaneous intensity at $t_2$ and $t_1$.

(f) *Minimum effective intensities for anticollision lights.* Each anticollision light effective intensity must equal or exceed the applicable values in the following table.

| Angle above or below the horizontal plane | Effective intensity (candles) |
|---|---|
| 0° to 5° | 400 |
| 5° to 10° | 240 |
| 10° to 20° | 80 |
| 20° to 30° | 40 |
| 30° to 75° | 20 |

[Doc. No. 4080, 29 FR 17955, Dec. 18, 1964, as amended by Amdt. 23–11, 36 FR 12972, July 10, 1971; Amdt. 23–20, 42 FR 36969, July 18, 1977; Amdt. 23–49, 61 FR 5169, Feb. 9, 1996]

SAFETY EQUIPMENT

### § 23.1411 General.

(a) Required safety equipment to be used by the flight crew in an emergency, such as automatic liferaft releases, must be readily accessible.

(b) Stowage provisions for required safety equipment must be furnished and must—

(1) Be arranged so that the equipment is directly accessible and its location is obvious; and

(2) Protect the safety equipment from damage caused by being subjected to the inertia loads resulting from the ultimate static load factors specified in § 23.561(b)(3) of this part.

[Amdt. 23–17, 41 FR 55465, Dec. 20, 1976, as amended by Amdt. 23–36, 53 FR 30815, Aug. 15, 1988]

### § 23.1415 Ditching equipment.

(a) Emergency flotation and signaling equipment required by any operating rule in this chapter must be installed so that it is readily available to the crew and passengers.

(b) Each raft and each life preserver must be approved.

(c) Each raft released automatically or by the pilot must be attached to the airplane by a line to keep it alongside the airplane. This line must be weak enough to break before submerging the empty raft to which it is attached.

(d) Each signaling device required by any operating rule in this chapter, must be accessible, function satisfactorily, and must be free of any hazard in its operation.

### § 23.1416 Pneumatic de-icer boot system.

If certification with ice protection provisions is desired and a pneumatic de-icer boot system is installed—

(a) The system must meet the requirements specified in § 23.1419.

(b) The system and its components must be designed to perform their intended function under any normal system operating temperature or pressure, and

(c) Means to indicate to the flight crew that the pneumatic de-icer boot system is receiving adequate pressure and is functioning normally must be provided.

[Amdt. 23–23, 43 FR 50593, Oct. 30, 1978]

### § 23.1419 Ice protection.

If certification with ice protection provisions is desired, compliance with the requirements of this section and other applicable sections of this part must be shown:

(a) An analysis must be performed to establish, on the basis of the airplane's operational needs, the adequacy of the ice protection system for the various components of the airplane. In addition, tests of the ice protection system must be conducted to demonstrate that the airplane is capable of operating safely in continuous maximum and intermittent maximum icing conditions, as described in appendix C of part 25 of this chapter. As used in this section, ''Capable of operating safely,'' means that airplane performance, controllability, maneuverability, and stability must not be less than that required in part 23, subpart B.

(b) Except as provided by paragraph (c) of this section, in addition to the analysis and physical evaluation prescribed in paragraph (a) of this section, the effectiveness of the ice protection system and its components must be shown by flight tests of the airplane or its components in measured natural atmospheric icing conditions and by one or more of the following tests, as found necessary to determine the adequacy of the ice protection system—

(1) Laboratory dry air or simulated icing tests, or a combination of both, of

the components or models of the components.

(2) Flight dry air tests of the ice protection system as a whole, or its individual components.

(3) Flight test of the airplane or its components in measured simulated icing conditions.

(c) If certification with ice protection has been accomplished on prior type certificated airplanes whose designs include components that are thermodynamically and aerodynamically equivalent to those used on a new airplane design, certification of these equivalent components may be accomplished by reference to previously accomplished tests, required in § 23.1419 (a) and (b), provided that the applicant accounts for any differences in installation of these components.

(d) A means must be identified or provided for determining the formation of ice on the critical parts of the airplane. Adequate lighting must be provided for the use of this means during night operation. Also, when monitoring of the external surfaces of the airplane by the flight crew is required for operation of the ice protection equipment, external lighting must be provided that is adequate to enable the monitoring to be done at night. Any illumination that is used must be of a type that will not cause glare or reflection that would handicap crewmembers in the performance of their duties. The Airplane Flight Manual or other approved manual material must describe the means of determining ice formation and must contain information for the safe operation of the airplane in icing conditions.

[Doc. No. 26344, 58 FR 18977, Apr. 9, 1993]

MISCELLANEOUS EQUIPMENT

### § 23.1431 Electronic equipment.

(a) In showing compliance with § 23.1309(b)(1) and (2) with respect to radio and electronic equipment and their installations, critical environmental conditions must be considered.

(b) Radio and electronic equipment, controls, and wiring must be installed so that operation of any unit or system of units will not adversely affect the simultaneous operation of any other radio or electronic unit, or system of units, required by this chapter.

(c) For those airplanes required to have more than one flightcrew member, or whose operation will require more than one flightcrew member, the cockpit must be evaluated to determine if the flightcrew members, when seated at their duty station, can converse without difficulty under the actual cockpit noise conditions when the airplane is being operated. If the airplane design includes provision for the use of communication headsets, the evaluation must also consider conditions where headsets are being used. If the evaluation shows conditions under which it will be difficult to converse, an intercommunication system must be provided.

(d) If installed communication equipment includes transmitter ''off-on'' switching, that switching means must be designed to return from the ''transmit'' to the ''off'' position when it is released and ensure that the transmitter will return to the off (non transmitting) state.

(e) If provisions for the use of communication headsets are provided, it must be demonstrated that the flightcrew members will receive all aural warnings under the actual cockpit noise conditions when the airplane is being operated when any headset is being used.

[Doc. No. 26344, 58 FR 18977, Apr. 9, 1993, as amended by Amdt. 23–49, 61 FR 5169, Feb. 9, 1996]

### § 23.1435 Hydraulic systems.

(a) *Design*. Each hydraulic system must be designed as follows:

(1) Each hydraulic system and its elements must withstand, without yielding, the structural loads expected in addition to hydraulic loads.

(2) A means to indicate the pressure in each hydraulic system which supplies two or more primary functions must be provided to the flight crew.

(3) There must be means to ensure that the pressure, including transient (surge) pressure, in any part of the system will not exceed the safe limit above design operating pressure and to prevent excessive pressure resulting from fluid volumetric changes in all

lines which are likely to remain closed long enough for such changes to occur.

(4) The minimum design burst pressure must be 2.5 times the operating pressure.

(b) *Tests.* Each system must be substantiated by proof pressure tests. When proof tested, no part of any system may fail, malfunction, or experience a permanent set. The proof load of each system must be at least 1.5 times the maximum operating pressure of that system.

(c) *Accumulators.* A hydraulic accumulator or reservoir may be installed on the engine side of any firewall if—

(1) It is an integral part of an engine or propeller system, or

(2) The reservoir is nonpressurized and the total capacity of all such nonpressurized reservoirs is one quart or less.

[Doc. No. 4080, 29 FR 17955, Dec. 18, 1964, as amended by Amdt. 23–7, 34 FR 13096, Aug. 13, 1969; Amdt. 23–14, 38 FR 31824, Nov. 19, 1973; Amdt. 23–43, 58 FR 18977, Apr. 9, 1993; Amdt. 23–49, 61 FR 5170, Feb. 9, 1996]

### § 23.1437 Accessories for multiengine airplanes.

For multiengine airplanes, engine-driven accessories essential to safe operation must be distributed among two or more engines so that the failure of any one engine will not impair safe operation through the malfunctioning of these accessories.

### § 23.1438 Pressurization and pneumatic systems.

(a) Pressurization system elements must be burst pressure tested to 2.0 times, and proof pressure tested to 1.5 times, the maximum normal operating pressure.

(b) Pneumatic system elements must be burst pressure tested to 3.0 times, and proof pressure tested to 1.5 times, the maximum normal operating pressure.

(c) An analysis, or a combination of analysis and test, may be substituted for any test required by paragraph (a) or (b) of this section if the Administrator finds it equivalent to the required test.

[Amdt. 23–20, 42 FR 36969, July 18, 1977]

### § 23.1441 Oxygen equipment and supply.

(a) If certification with supplemental oxygen equipment is requested, or the airplane is approved for operations at or above altitudes where oxygen is required to be used by the operating rules, oxygen equipment must be provided that meets the requirements of this section and §§ 23.1443 through 23.1449. Portable oxygen equipment may be used to meet the requirements of this part if the portable equipment is shown to comply with the applicable requirements, is identified in the airplane type design, and its stowage provisions are found to be in compliance with the requirements of § 23.561.

(b) The oxygen system must be free from hazards in itself, in its method of operation, and its effect upon other components.

(c) There must be a means to allow the crew to readily determine, during the flight, the quantity of oxygen available in each source of supply.

(d) Each required flight crewmember must be provided with—

(1) Demand oxygen equipment if the airplane is to be certificated for operation above 25,000 feet.

(2) Pressure demand oxygen equipment if the airplane is to be certificated for operation above 40,000 feet.

(e) There must be a means, readily available to the crew in flight, to turn on and to shut off the oxygen supply at the high pressure source. This shutoff requirement does not apply to chemical oxygen generators.

[Amdt. 23–9, 35 FR 6386, Apr. 21, 1970, as amended by Amdt. 23–43, 58 FR 18978, Apr. 9, 1993]

### § 23.1443 Minimum mass flow of supplemental oxygen.

(a) If continuous flow oxygen equipment is installed, an applicant must show compliance with the requirements of either paragraphs (a)(1) and (a)(2) or paragraph (a)(3) of this section:

(1) For each passenger, the minimum mass flow of supplemental oxygen required at various cabin pressure altitudes may not be less than the flow required to maintain, during inspiration and while using the oxygen equipment

(including masks) provided, the following mean tracheal oxygen partial pressures:

(i) At cabin pressure altitudes above 10,000 feet up to and including 18,500 feet, a mean tracheal oxygen partial pressure of 100 mm. Hg when breathing 15 liters per minute, Body Temperature, Pressure, Saturated (BTPS) and with a tidal volume of 700 cc. with a constant time interval between respirations.

(ii) At cabin pressure altitudes above 18,500 feet up to and including 40,000 feet, a mean tracheal oxygen partial pressure of 83.8 mm. Hg when breathing 30 liters per minute, BTPS, and with a tidal volume of 1,100 cc. with a constant time interval between respirations.

(2) For each flight crewmember, the minimum mass flow may not be less than the flow required to maintain, during inspiration, a mean tracheal oxygen partial pressure of 149 mm. Hg when breathing 15 liters per minute, BTPS, and with a maximum tidal volume of 700 cc. with a constant time interval between respirations.

(3) The minimum mass flow of supplemental oxygen supplied for each user must be at a rate not less than that shown in the following figure for each altitude up to and including the maximum operating altitude of the airplane.

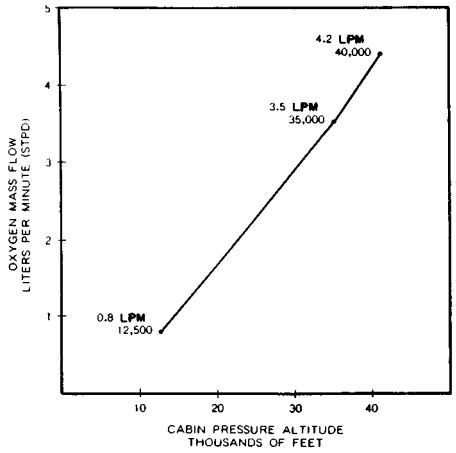


(b) If demand equipment is installed for use by flight crewmembers, the minimum mass flow of supplemental oxygen required for each flight crewmember may not be less than the flow required to maintain, during inspiration, a mean tracheal oxygen partial pressure of 122 mm. Hg up to and including a cabin pressure altitude of 35,000 feet, and 95 percent oxygen between cabin pressure altitudes of 35,000 and 40,000 feet, when breathing 20 liters per minute BTPS. In addition, there must be means to allow the crew to use undiluted oxygen at their discretion.

(c) If first-aid oxygen equipment is installed, the minimum mass flow of oxygen to each user may not be less than 4 liters per minute, STPD. However, there may be a means to decrease this flow to not less than 2 liters per minute, STPD, at any cabin altitude. The quantity of oxygen required is based upon an average flow rate of 3 liters per minute per person for whom first-aid oxygen is required.

(d) As used in this section:

(1) BTPS means Body Temperature, and Pressure, Saturated (which is, 37 °C, and the ambient pressure to which the body is exposed, minus 47 mm. Hg,

which is the tracheal pressure displaced by water vapor pressure when the breathed air becomes saturated with water vapor at 37 °C).

(2) STPD means Standard, Temperature, and Pressure, Dry (which is, 0 °C at 760 mm. Hg with no water vapor).

[Doc. No. 26344, 58 FR 18978, Apr. 9, 1993]

### § 23.1445 Oxygen distribution system.

(a) Except for flexible lines from oxygen outlets to the dispensing units, or where shown to be otherwise suitable to the installation, nonmetallic tubing must not be used for any oxygen line that is normally pressurized during flight.

(b) Nonmetallic oxygen distribution lines must not be routed where they may be subjected to elevated temperatures, electrical arcing, and released flammable fluids that might result from any probable failure.

[Doc. No. 26344, 58 FR 18978, Apr. 9, 1993]

### § 23.1447 Equipment standards for oxygen dispensing units.

If oxygen dispensing units are installed, the following apply:

(a) There must be an individual dispensing unit for each occupant for whom supplemental oxygen is to be supplied. Each dispensing unit must:

(1) Provide for effective utilization of the oxygen being delivered to the unit.

(2) Be capable of being readily placed into position on the face of the user.

(3) Be equipped with a suitable means to retain the unit in position on the face.

(4) If radio equipment is installed, the flightcrew oxygen dispensing units must be designed to allow the use of that equipment and to allow communication with any other required crew member while at their assigned duty station.

(b) If certification for operation up to and including 18,000 feet (MSL) is requested, each oxygen dispensing unit must:

(1) Cover the nose and mouth of the user; or

(2) Be a nasal cannula, in which case one oxygen dispensing unit covering both the nose and mouth of the user must be available. In addition, each nasal cannula or its connecting tubing must have permanently affixed—

(i) A visible warning against smoking while in use;

(ii) An illustration of the correct method of donning; and

(iii) A visible warning against use with nasal obstructions or head colds with resultant nasal congestion.

(c) If certification for operation above 18,000 feet (MSL) is requested, each oxygen dispensing unit must cover the nose and mouth of the user.

(d) For a pressurized airplane designed to operate at flight altitudes above 25,000 feet (MSL), the dispensing units must meet the following:

(1) The dispensing units for passengers must be connected to an oxygen supply terminal and be immediately available to each occupant wherever seated.

(2) The dispensing units for crewmembers must be automatically presented to each crewmember before the cabin pressure altitude exceeds 15,000 feet, or the units must be of the quick-donning type, connected to an oxygen supply terminal that is immediately available to crewmembers at their station.

(e) If certification for operation above 30,000 feet is requested, the dispensing units for passengers must be automatically presented to each occupant before the cabin pressure altitude exceeds 15,000 feet.

(f) If an automatic dispensing unit (hose and mask, or other unit) system is installed, the crew must be provided with a manual means to make the dispensing units immediately available in the event of failure of the automatic system.

[Amdt. 23–9, 35 FR 6387, Apr. 21, 1970, as amended by Amdt. 23–20, 42 FR 36969, July 18, 1977; Amdt. 23–30, 49 FR 7340, Feb. 28, 1984; Amdt. 23–43, 58 FR 18978, Apr. 9, 1993; Amdt. 23–49, 61 FR 5170, Feb. 9, 1996]

### § 23.1449 Means for determining use of oxygen.

There must be a means to allow the crew to determine whether oxygen is being delivered to the dispensing equipment.

[Amdt. 23–9, 35 FR 6387, Apr. 21, 1970]

**§ 23.1450 Chemical oxygen generators.**

(a) For the purpose of this section, a chemical oxygen generator is defined as a device which produces oxygen by chemical reaction.

(b) Each chemical oxygen generator must be designed and installed in accordance with the following requirements:

(1) Surface temperature developed by the generator during operation may not create a hazard to the airplane or to its occupants.

(2) Means must be provided to relieve any internal pressure that may be hazardous.

(c) In addition to meeting the requirements in paragraph (b) of this section, each portable chemical oxygen generator that is capable of sustained operation by successive replacement of a generator element must be placarded to show—

(1) The rate of oxygen flow, in liters per minute;

(2) The duration of oxygen flow, in minutes, for the replaceable generator element; and

(3) A warning that the replaceable generator element may be hot, unless the element construction is such that the surface temperature cannot exceed 100° F.

[Amdt. 23–20, 42 FR 36969, July 18, 1977]

**§ 23.1451 Fire protection for oxygen equipment.**

Oxygen equipment and lines must:

(a) Not be installed in any designed fire zones.

(b) Be protected from heat that may be generated in, or escape from, any designated fire zone.

(c) Be installed so that escaping oxygen cannot come in contact with and cause ignition of grease, fluid, or vapor accumulations that are present in normal operation or that may result from the failure or malfunction of any other system.

[Doc. No. 27806, 61 FR 5170, Feb. 9, 1996]

**§ 23.1453 Protection of oxygen equipment from rupture.**

(a) Each element of the oxygen system must have sufficient strength to withstand the maximum pressure and temperature, in combination with any externally applied loads arising from consideration of limit structural loads, that may be acting on that part of the system.

(b) Oxygen pressure sources and the lines between the source and the shutoff means must be:

(1) Protected from unsafe temperatures; and

(2) Located where the probability and hazard of rupture in a crash landing are minimized.

[Doc. No. 27806, 61 FR 5170, Feb. 9, 1996]

**§ 23.1457 Cockpit voice recorders.**

(a) Each cockpit voice recorder required by the operating rules of this chapter must be approved and must be installed so that it will record the following:

(1) Voice communications transmitted from or received in the airplane by radio.

(2) Voice communications of flight crewmembers on the flight deck.

(3) Voice communications of flight crewmembers on the flight deck, using the airplane's interphone system.

(4) Voice or audio signals identifying navigation or approach aids introduced into a headset or speaker.

(5) Voice communications of flight crewmembers using the passenger loudspeaker system, if there is such a system and if the fourth channel is available in accordance with the requirements of paragraph (c)(4)(ii) of this section.

(b) The recording requirements of paragraph (a)(2) of this section must be met by installing a cockpit-mounted area microphone, located in the best position for recording voice communications originating at the first and second pilot stations and voice communications of other crewmembers on the flight deck when directed to those stations. The microphone must be so located and, if necessary, the preamplifiers and filters of the recorder must be so adjusted or supplemented, so that the intelligibility of the recorded communications is as high as practicable when recorded under flight cockpit noise conditions and played back. Repeated aural or visual playback of the record may be used in evaluating intelligibility.

(c) Each cockpit voice recorder must be installed so that the part of the communication or audio signals specified in paragraph (a) of this section obtained from each of the following sources is recorded on a separate channel:

(1) For the first channel, from each boom, mask, or handheld microphone, headset, or speaker used at the first pilot station.

(2) For the second channel from each boom, mask, or handheld microphone, headset, or speaker used at the second pilot station.

(3) For the third channel—from the cockpit-mounted area microphone.

(4) For the fourth channel from:

(i) Each boom, mask, or handheld microphone, headset, or speaker used at the station for the third and fourth crewmembers.

(ii) If the stations specified in paragraph (c)(4)(i) of this section are not required or if the signal at such a station is picked up by another channel, each microphone on the flight deck that is used with the passenger loudspeaker system, if its signals are not picked up by another channel.

(5) And that as far as is practicable all sounds received by the microphone listed in paragraphs (c)(1), (2), and (4) of this section must be recorded without interruption irrespective of the position of the interphone-transmitter key switch. The design shall ensure that sidetone for the flight crew is produced only when the interphone, public address system, or radio transmitters are in use.

(d) Each cockpit voice recorder must be installed so that:

(1) It receives its electric power from the bus that provides the maximum reliability for operation of the cockpit voice recorder without jeopardizing service to essential or emergency loads.

(2) There is an automatic means to simultaneously stop the recorder and prevent each erasure feature from functioning, within 10 minutes after crash impact; and

(3) There is an aural or visual means for preflight checking of the recorder for proper operation.

(e) The record container must be located and mounted to minimize the probability of rupture of the container as a result of crash impact and consequent heat damage to the record from fire. In meeting this requirement, the record container must be as far aft as practicable, but may not be where aft mounted engines may crush the container during impact. However, it need not be outside of the pressurized compartment.

(f) If the cockpit voice recorder has a bulk erasure device, the installation must be designed to minimize the probability of inadvertent operation and actuation of the device during crash impact.

(g) Each recorder container must:

(1) Be either bright orange or bright yellow;

(2) Have reflective tape affixed to its external surface to facilitate its location under water; and

(3) Have an underwater locating device, when required by the operating rules of this chapter, on or adjacent to the container which is secured in such manner that they are not likely to be separated during crash impact.

[Amdt. 23–35, 53 FR 26142, July 11, 1988]

### § 23.1459 Flight recorders.

(a) Each flight recorder required by the operating rules of this chapter must be installed so that:

(1) It is supplied with airspeed, altitude, and directional data obtained from sources that meet the accuracy requirements of §§ 23.1323, 23.1325, and 23.1327, as appropriate;

(2) The vertical acceleration sensor is rigidly attached, and located longitudinally either within the approved center of gravity limits of the airplane, or at a distance forward or aft of these limits that does not exceed 25 percent of the airplane's mean aerodynamic chord;

(3) It receives its electrical power power from the bus that provides the maximum reliability for operation of the flight recorder without jeopardizing service to essential or emergency loads;

(4) There is an aural or visual means for preflight checking of the recorder for proper recording of data in the storage medium.

(5) Except for recorders powered solely by the engine-driven electrical generator system, there is an automatic means to simultaneously stop a recorder that has a data erasure feature and prevent each erasure feature from functioning, within 10 minutes after crash impact; and

(b) Each nonejectable record container must be located and mounted so as to minimize the probability of container rupture resulting from crash impact and subsequent damage to the record from fire. In meeting this requirement the record container must be located as far aft as practicable, but need not be aft of the pressurized compartment, and may not be where aft-mounted engines may crush the container upon impact.

(c) A correlation must be established between the flight recorder readings of airspeed, altitude, and heading and the corresponding readings (taking into account correction factors) of the first pilot's instruments. The correlation must cover the airspeed range over which the airplane is to be operated, the range of altitude to which the airplane is limited, and 360 degrees of heading. Correlation may be established on the ground as appropriate.

(d) Each recorder container must:

(1) Be either bright orange or bright yellow;

(2) Have reflective tape affixed to its external surface to facilitate its location under water; and

(3) Have an underwater locating device, when required by the operating rules of this chapter, on or adjacent to the container which is secured in such a manner that they are not likely to be separated during crash impact.

(e) Any novel or unique design or operational characteristics of the aircraft shall be evaluated to determine if any dedicated parameters must be recorded on flight recorders in addition to or in place of existing requirements. CITA≤[Amdt. 23–35, 53 FR 26143, July 11, 1988]

### § 23.1461 Equipment containing high energy rotors.

(a) Equipment, such as Auxiliary Power Units (APU) and constant speed drive units, containing high energy rotors must meet paragraphs (b), (c), or (d) of this section.

(b) High energy rotors contained in equipment must be able to withstand damage caused by malfunctions, vibration, abnormal speeds, and abnormal temperatures. In addition—

(1) Auxiliary rotor cases must be able to contain damage caused by the failure of high energy rotor blades; and

(2) Equipment control devices, systems, and instrumentation must reasonably ensure that no operating limitations affecting the integrity of high energy rotors will be exceeded in service.

(c) It must be shown by test that equipment containing high energy rotors can contain any failure of a high energy rotor that occurs at the highest speed obtainable with the normal speed control devices inoperative.

(d) Equipment containing high energy rotors must be located where rotor failure will neither endanger the occupants nor adversely affect continued safe flight.

[Amdt. 23–20, 42 FR 36969, July 18, 1977, as amended by Amdt. 23–49, 61 FR 5170, Feb. 9, 1996]

## Subpart G—Operating Limitations and Information

### § 23.1501 General.

(a) Each operating limitation specified in §§ 23.1505 through 23.1527 and other limitations and information necessary for safe operation must be established.

(b) The operating limitations and other information necessary for safe operation must be made available to the crewmembers as prescribed in §§ 23.1541 through 23.1589.

[Amdt. 23–21, 43 FR 2319, Jan. 16, 1978]

### § 23.1505 Airspeed limitations.

(a) The never-exceed speed $V_{NE}$ must be established so that it is—

(1) Not less than 0.9 times the minimum value of $V_D$ allowed under § 23.335; and

(2) Not more than the lesser of—

(i) 0.9 $V_D$ established under § 23.335; or

(ii) 0.9 times the maximum speed shown under § 23.251.

(b) The maximum structural cruising speed $V_{NO}$ must be established so that it is—

(1) Not less than the minimum value of $V_C$ allowed under § 23.335; and

(2) Not more than the lesser of—

(i) $V_C$ established under § 23.335; or

(ii) 0.89 $V_{NE}$ established under paragraph (a) of this section.

(c) Paragraphs (a) and (b) of this section do not apply to turbine airplanes or to airplanes for which a design diving speed $V_D/M_D$ is established under § 23.335(b)(4). For those airplanes, a maximum operating limit speed ($V_{MO}$ $M_{MO}$-airspeed or Mach number, whichever is critical at a particular altitude) must be established as a speed that may not be deliberately exceeded in any regime of flight (climb, cruise, or descent) unless a higher speed is authorized for flight test or pilot training operations. $V_{MO}/M_{MO}$ must be established so that it is not greater than the design cruising speed $V_C/M_C$ and so that it is sufficiently below $V_D/M_D$ and the maximum speed shown under § 23.251 to make it highly improbable that the latter speeds will be inadvertently exceeded in operations. The speed margin between $V_{MO}/M_{MO}$ and $V_D/M_D$ or the maximum speed shown under § 23.251 may not be less than the speed margin established between $V_C/M_C$ and $V_D/M_D$ under § 23.335(b), or the speed margin found necessary in the flight test conducted under § 23.253.

[Doc. No. 4080, 29 FR 17955, Dec. 18, 1964, as amended by Amdt. 23–7, 34 FR 13096, Aug. 13, 1969]

### § 23.1507 Operating maneuvering speed.

The maximum operating maneuvering speed, $V_O$, must be established as an operating limitation. $V_O$ is a selected speed that is not greater than $V_S\sqrt{n}$ established in § 23.335(c).

[Doc. No. 26269, 58 FR 42165, Aug. 6, 1993]

### § 23.1511 Flap extended speed.

(a) The flap extended speed $V_{FE}$ must be established so that it is—

(1) Not less than the minimum value of $V_F$ allowed in § 23.345(b); and

(2) Not more than $V_F$ established under § 23.345(a), (c), and (d).

(i) $V_F$ established under § 23.345; or

(ii) $V_F$ established under § 23.457.

(b) Additional combinations of flap setting, airspeed, and engine power may be established if the structure has been proven for the corresponding design conditions.

[Doc. No. 4080, 29 FR 17955, Dec. 18, 1964; 30 FR 258, Jan. 9, 1965, as amended by Amdt. 23–50, 61 FR 5192, Feb. 9, 1996]

### § 23.1513 Minimum control speed.

The minimum control speed $V_{MC}$, determined under § 23.149, must be established as an operating limitation.

### § 23.1519 Weight and center of gravity.

The weight and center of gravity limitations determined under § 23.23 must be established as operating limitations.

### § 23.1521 Powerplant limitations.

(a) *General.* The powerplant limitations prescribed in this section must be established so that they do not exceed the corresponding limits for which the engines or propellers are type certificated. In addition, other powerplant limitations used in determining compliance with this part must be established.

(b) *Takeoff operation.* The powerplant takeoff operation must be limited by—

(1) The maximum rotational speed (rpm);

(2) The maximum allowable manifold pressure (for reciprocating engines);

(3) The maximum allowable gas temperature (for turbine engines);

(4) The time limit for the use of the power or thrust corresponding to the limitations established in paragraphs (b)(1) through (3) of this section; and

(5) The maximum allowable cylinder head (as applicable), liquid coolant and oil temperatures.

(c) *Continuous operation.* The continuous operation must be limited by—

(1) The maximum rotational speed;

(2) The maximum allowable manifold pressure (for reciprocating engines);

(3) The maximum allowable gas temperature (for turbine engines); and

(4) The maximum allowable cylinder head, oil, and liquid coolant temperatures.

(d) *Fuel grade or designation.* The minimum fuel grade (for reciprocating engines), or fuel designation (for turbine engines), must be established so that it is not less than that required for the

operation of the engines within the limitations in paragraphs (b) and (c) of this section.

(e) *Ambient temperature.* For all airplanes except reciprocating engine-powered airplanes of 6,000 pounds or less maximum weight, ambient temperature limitations (including limitations for winterization installations if applicable) must be established as the maximum ambient atmospheric temperature at which compliance with the cooling provisions of §§ 23.1041 through 23.1047 is shown.

[Doc. No. 4080, 29 FR 17955, Dec. 18, 1964; 30 FR 258, Jan. 9, 1965, as amended by Amdt. 23–21, 43 FR 2319, Jan. 16, 1978; Amdt. 23–45, 58 FR 42165, Aug. 6, 1993; Amdt. 23–50, 61 FR 5192, Feb. 9, 1996]

### § 23.1522 Auxiliary power unit limitations.

If an auxiliary power unit is installed, the limitations established for the auxiliary power must be specified in the operating limitations for the airplane.[Doc. No. 26269, 58 FR 42166, Aug. 6, 1993]

### § 23.1523 Minimum flight crew.

The minimum flight crew must be established so that it is sufficient for safe operation considering—

(a) The workload on individual crewmembers and, in addition for commuter category airplanes, each crewmember workload determination must consider the following:

(1) Flight path control,

(2) Collision avoidance,

(3) Navigation,

(4) Communications,

(5) Operation and monitoring of all essential airplane systems,

(6) Command decisions, and

(7) The accessibility and ease of operation of necessary controls by the appropriate crewmember during all normal and emergency operations when at the crewmember flight station;

(b) The accessibility and ease of operation of necessary controls by the appropriate crewmember; and

(c) The kinds of operation authorized under § 23.1525.

[Amdt. 23–21, 43 FR 2319, Jan. 16, 1978, as amended by Amdt. 23–34, 52 FR 1834, Jan. 15, 1987]

### § 23.1524 Maximum passenger seating configuration.

The maximum passenger seating configuration must be established.

[Amdt. 23–10, 36 FR 2864, Feb. 11, 1971]

### § 23.1525 Kinds of operation.

The kinds of operation authorized (e.g. VFR, IFR, day or night) and the meteorological conditions (e.g. icing) to which the operation of the airplane is limited or from which it is prohibited, must be established appropriate to the installed equipment.

[Doc. No. 26269, 58 FR 42166, Aug. 6, 1993]

### § 23.1527 Maximum operating altitude.

(a) The maximum altitude up to which operation is allowed, as limited by flight, structural, powerplant, functional or equipment characteristics, must be established.

(b) A maximum operating altitude limitation of not more than 25,000 feet must be established for pressurized airplanes unless compliance with § 23.775(e) is shown.

[Doc. No. 26269, 58 FR 42166, Aug. 6, 1993]

### § 23.1529 Instructions for Continued Airworthiness.

The applicant must prepare Instructions for Continued Airworthiness in accordance with appendix G to this part that are acceptable to the Administrator. The instructions may be incomplete at type certification if a program exists to ensure their completion prior to delivery of the first airplane or issuance of a standard certificate of airworthiness, whichever occurs later.

[Amdt. 23–26, 45 FR 60171, Sept. 11, 1980]

## MARKINGS AND PLACARDS

### § 23.1541 General.

(a) The airplane must contain—

(1) The markings and placards specified in §§ 23.1545 through 23.1567; and

(2) Any additional information, instrument markings, and placards required for the safe operation if it has unusual design, operating, or handling characteristics.

(b) Each marking and placard prescribed in paragraph (a) of this section—

(1) Must be displayed in a conspicuous place; and

(2) May not be easily erased, disfigured, or obscured.

(c) For airplanes which are to be certificated in more than one category—

(1) The applicant must select one category upon which the placards and markings are to be based; and

(2) The placards and marking information for all categories in which the airplane is to be certificated must be furnished in the Airplane Flight Manual.

[Doc. No. 4080, 29 FR 17955, Dec. 18, 1964; 30 FR 258, Jan. 9, 1965, as amended by Amdt. 23–21, 43 FR 2319, Jan. 16, 1978]

### § 23.1543 Instrument markings: General.

For each instrument—

(a) When markings are on the cover glass of the instrument, there must be means to maintain the correct alignment of the glass cover with the face of the dial; and

(b) Each arc and line must be wide enough and located to be clearly visible to the pilot.

(c) All related instruments must be calibrated in compatible units.

[Doc. No. 4080, 29 FR 17955, Dec. 18, 1964; 30 FR 258, Jan. 9, 1965, as amended by Amdt. 23–50, 61 FR 5192, Feb. 9, 1996]

### § 23.1545 Airspeed indicator.

(a) Each airspeed indicator must be marked as specified in paragraph (b) of this section, with the marks located at the corresponding indicated airspeeds.

(b) The following markings must be made:

(1) For the never-exceed speed $V_{NE}$, a radial red line.

(2) For the caution range, a yellow arc extending from the red line specified in paragraph (b)(1) of this section to the upper limit of the green arc specified in paragraph (b)(3) of this section.

(3) For the normal operating range, a green arc with the lower limit at $V_{S1}$ with maximum weight and with landing gear and wing flaps retracted, and the upper limit at the maximum structural cruising speed $V_{NO}$ established under § 23.1505(b).

(4) For the flap operating range, a white arc with the lower limit at $V_{S0}$ at the maximum weight, and the upper limit at the flaps-extended speed $V_{FE}$ established under § 23.1511.

(5) For reciprocating multiengine-powered airplanes of 6,000 pounds or less maximum weight, for the speed at which compliance has been shown with § 23.69(b) relating to rate of climb at maximum weight and at sea level, a blue radial line.

(6) For reciprocating multiengine-powered airplanes of 6,000 pounds or less maximum weight, for the maximum value of minimum control speed, $V_{MC}$, (one-engine-inoperative) determined under § 23.149(b), a red radial line.

(c) If $V_{NE}$ or $V_{NO}$ vary with altitude, there must be means to indicate to the pilot the appropriate limitations throughout the operating altitude range.

(d) Paragraphs (b)(1) through (b)(3) and paragraph (c) of this section do not apply to aircraft for which a maximum operating speed $V_{MO}/M_{MO}$ is established under § 23.1505(c). For those aircraft there must either be a maximum allowable airspeed indication showing the variation of $V_{MO}/M_{MO}$ with altitude or compressibility limitations (as appropriate), or a radial red line marking for $V_{MO}/M_{MO}$ must be made at lowest value of $V_{MO}/M_{MO}$ established for any altitude up to the maximum operating altitude for the airplane.

[Doc. No. 4080, 29 FR 17955, Dec. 18, 1964, as amended by Amdt. 23–3, 30 FR 14240, Nov. 13, 1965; Amdt. 23–7, 34 FR 13097, Aug. 13, 1969; Amdt. 23–23, 43 FR 50593, Oct. 30, 1978; Amdt. 23–50, 61 FR 5193, Feb. 9, 1996]

### § 23.1547 Magnetic direction indicator.

(a) A placard meeting the requirements of this section must be installed on or near the magnetic direction indicator.

(b) The placard must show the calibration of the instrument in level flight with the engines operating.

(c) The placard must state whether the calibration was made with radio receivers on or off.

(d) Each calibration reading must be in terms of magnetic headings in not more than 30 degree increments.

(e) If a magnetic nonstabilized direction indicator can have a deviation of

more than 10 degrees caused by the operation of electrical equipment, the placard must state which electrical loads, or combination of loads, would cause a deviation of more than 10 degrees when turned on.

[Doc. No. 4080, 29 FR 17955, Dec. 18, 1964; 30 FR 258, Jan. 9, 1965, as amended by Amdt. 23–20, 42 FR 36969, July 18, 1977]

### § 23.1549 Powerplant and auxiliary power unit instruments.

For each required powerplant and auxiliary power unit instrument, as appropriate to the type of instruments—

(a) Each maximum and, if applicable, minimum safe operating limit must be marked with a red radial or a red line;

(b) Each normal operating range must be marked with a green arc or green line, not extending beyond the maximum and minimum safe limits;

(c) Each takeoff and precautionary range must be marked with a yellow arc or a yellow line; and

(d) Each engine, auxiliary power unit, or propeller range that is restricted because of excessive vibration stresses must be marked with red arcs or red lines.

[Amdt. 23–12, 41 FR 55466, Dec. 20, 1976, as amended by Amdt. 23–28, 47 FR 13315, Mar. 29, 1982; Amdt. 23–45, 58 FR 42166, Aug. 6, 1993]

### § 23.1551 Oil quantity indicator.

Each oil quantity indicator must be marked in sufficient increments to indicate readily and accurately the quantity of oil.

### § 23.1553 Fuel quantity indicator.

A red radial line must be marked on each indicator at the calibrated zero reading, as specified in § 23.1337(b)(1).

[Doc. No. 27807, 61 FR 5193, Feb. 9, 1996]

### § 23.1555 Control markings.

(a) Each cockpit control, other than primary flight controls and simple push button type starter switches, must be plainly marked as to its function and method of operation.

(b) Each secondary control must be suitably marked.

(c) For powerplant fuel controls—

(1) Each fuel tank selector control must be marked to indicate the position corresponding to each tank and to each existing cross feed position;

(2) If safe operation requires the use of any tanks in a specific sequence, that sequence must be marked on or near the selector for those tanks;

(3) The conditions under which the full amount of usable fuel in any restricted usage fuel tank can safely be used must be stated on a placard adjacent to the selector valve for that tank; and

(4) Each valve control for any engine of a multiengine airplane must be marked to indicate the position corresponding to each engine controlled.

(d) Usable fuel capacity must be marked as follows:

(1) For fuel systems having no selector controls, the usable fuel capacity of the system must be indicated at the fuel quantity indicator.

(2) For fuel systems having selector controls, the usable fuel capacity available at each selector control position must be indicated near the selector control.

(e) For accessory, auxiliary, and emergency controls—

(1) If retractable landing gear is used, the indicator required by § 23.729 must be marked so that the pilot can, at any time, ascertain that the wheels are secured in the extreme positions; and

(2) Each emergency control must be red and must be marked as to method of operation. No control other than an emergency control, or a control that serves an emergency function in addition to its other functions, shall be this color.

[Doc. No. 4080, 29 FR 17955, Dec. 18, 1964; 30 FR 258, Jan. 9, 1965, as amended by Amdt. 23–21, 43 FR 2319, Jan. 16, 1978; Amdt. 23–50, 61 FR 5193, Feb. 9, 1996]

### § 23.1557 Miscellaneous markings and placards.

(a) *Baggage and cargo compartments, and ballast location.* Each baggage and cargo compartment, and each ballast location, must have a placard stating any limitations on contents, including weight, that are necessary under the loading requirements.

(b) *Seats.* If the maximum allowable weight to be carried in a seat is less than 170 pounds, a placard stating the

lesser weight must be permanently attached to the seat structure.

(c) *Fuel, oil, and coolant filler openings.* The following apply:

(1) Fuel filter openings must be marked at or near the filler cover with—

(i) For reciprocating engine-powered airplanes—

(A) The word ''Avgas''; and

(B) The minimum fuel grade.

(ii) For turbine engine-powered airplanes—

(A) The words ''Jet Fuel''; and

(B) The permissible fuel designations, or references to the Airplane Flight Manual (AFM) for permissible fuel designations.

(iii) For pressure fueling systems, the maximum permissible fueling supply pressure and the maximum permissible defueling pressure.

(2) Oil filler openings must be marked at or near the filler cover with the word ''Oil'' and the permissible oil designations, or references to the Airplane Flight Manual (AFM) for permissible oil designations.

(3) Coolant filler openings must be marked at or near the filler cover with the word ''Coolant''.

(d) *Emergency exit placards.* Each placard and operating control for each emergency exit must be red. A placard must be near each emergency exit control and must clearly indicate the location of that exit and its method of operation.

(e) The system voltage of each direct current installation must be clearly marked adjacent to its exernal power connection.

[Doc. No. 4080, 29 FR 17955, Dec. 18, 1964; as amended by Amdt. 23–21, 42 FR 15042, Mar. 17, 1977; Amdt. 23–23, 43 FR 50594, Oct. 30, 1978; Amdt. 23–45, 58 FR 42166, Aug. 6, 1993]

### § 23.1559 Operating limitations placard.

(a) There must be a placard in clear view of the pilot stating—

(1) That the airplane must be operated in accordance with the Airplane Flight Manual; and

(2) The certification category of the airplane to which the placards apply.

(b) For airplanes certificated in more than one category, there must be a placard in clear view of the pilot stating that other limitations are contained in the Airplane Flight Manual.

(c) There must be a placard in clear view of the pilot that specifies the kind of operations to which the operation of the airplane is limited or from which it is prohibited under § 23.1525.

[Doc. No. 27807, 61 FR 5193, Feb. 9, 1996]

### § 23.1561 Safety equipment.

(a) Safety equipment must be plainly marked as to method of operation.

(b) Stowage provisions for required safety equipment must be marked for the benefit of occupants.

### § 23.1563 Airspeed placards.

There must be an airspeed placard in clear view of the pilot and as close as practicable to the airspeed indicator. This placard must list—

(a) The operating maneuvering speed, $V_O$; and

(b) The maximum landing gear operating speed $V_{LO}$.

(c) For reciprocating multiengine-powered airplanes of more than 6,000 pounds maximum weight, and turbine engine-powered airplanes, the maximum value of the minimum control speed, $V_{MC}$ (one-engine-inoperative) determined under § 23.149(b).

[Amdt. 23–7, 34 FR 13097, Aug. 13, 1969, as amended by Amdt. 23–45, 58 FR 42166, Aug. 6, 1993; Amdt. 23–50, 61 FR 5193, Feb. 9, 1996]

### § 23.1567 Flight maneuver placard.

(a) For normal category airplanes, there must be a placard in front of and in clear view of the pilot stating: ''No acrobatic maneuvers, including spins, approved.''

(b) For utility category airplanes, there must be—

(1) A placard in clear view of the pilot stating: ''Acrobatic maneuvers are limited to the following ———'' (list approved maneuvers and the recommended entry speed for each); and

(2) For those airplanes that do not meet the spin requirements for acrobatic category airplanes, an additional placard in clear view of the pilot stating: ''Spins Prohibited.''

(c) For acrobatic category airplanes, there must be a placard in clear view of the pilot listing the approved acrobatic maneuvers and the recommended entry

airspeed for each. If inverted flight maneuvers are not approved, the placard must bear a notation to this effect.

(d) For acrobatic category airplanes and utility category airplanes approved for spinning, there must be a placard in clear view of the pilot—

(1) Listing the control actions for recovery from spinning maneuvers; and

(2) Stating that recovery must be initiated when spiral characteristics appear, or after not more than six turns or not more than any greater number of turns for which the airplane has been certificated.

[Doc. No. 4080, 29 FR 17955, Dec. 18, 1964; 30 FR 258, Jan. 9, 1965, as amended by Amdt. 23–13, 37 FR 20023, Sept. 23, 1972; Amdt. 23–21, 43 FR 2319, Jan. 16, 1978; Amdt. 23–50, 61 FR 5193, Feb. 9, 1996]

AIRPLANE FLIGHT MANUAL AND APPROVED MANUAL MATERIAL

### § 23.1581 General.

(a) *Furnishing information.* An Airplane Flight Manual must be furnished with each airplane, and it must contain the following:

(1) Information required by §§ 23.1583 through 23.1589.

(2) Other information that is necessary for safe operation because of design, operating, or handling characteristics.

(3) Further information necessary to comply with the relevant operating rules.

(b) *Approved information.* (1) Except as provided in paragraph (b)(2) of this section, each part of the Airplane Flight Manual containing information prescribed in §§ 23.1583 through 23.1589 must be approved, segregated, identified and clearly distinguished from each unapproved part of that Airplane Flight Manual.

(2) The requirements of paragraph (b)(1) of this section do not apply to reciprocating engine-powered airplanes of 6,000 pounds or less maximum weight, if the following is met:

(i) Each part of the Airplane Flight Manual containing information prescribed in § 23.1583 must be limited to such information, and must be approved, identified, and clearly distinguished from each other part of the Airplane Flight Manual.

(ii) The information prescribed in §§ 23.1585 through 23.1589 must be determined in accordance with the applicable requirements of this part and presented in its entirety in a manner acceptable to the Administrator.

(3) Each page of the Airplane Flight Manual containing information prescribed in this section must be of a type that is not easily erased, disfigured, or misplaced, and is capable of being inserted in a manual provided by the applicant, or in a folder, or in any other permanent binder.

(c) The units used in the Airplane Flight Manual must be the same as those marked on the appropriate instruments and placards.

(d) All Airplane Flight Manual operational airspeeds, unless otherwise specified, must be presented as indicated airspeeds.

(e) Provision must be made for stowing the Airplane Flight Manual in a suitable fixed container which is readily accessible to the pilot.

(f) *Revisions and amendments.* Each Airplane Flight Manual (AFM) must contain a means for recording the incorporation of revisions and amendments.

[Amdt. 23–21, 43 FR 2319, Jan. 16, 1978, as amended by Amdt. 23–34, 52 FR 1834, Jan. 15, 1987; Amdt. 23–45, 58 FR 42166, Aug. 6, 1993; Amdt. 23–50, 61 FR 5193, Feb. 9, 1996]

### § 23.1583 Operating limitations.

The Airplane Flight Manual must contain operating limitations determined under this part 23, including the following—

(a) *Airspeed limitations.* The following information must be furnished:

(1) Information necessary for the marking of the airspeed limits on the indicator as required in § 23.1545, and the significance of each of those limits and of the color coding used on the indicator.

(2) The speeds $V_{MC}$, $V_O$, $V_{LE}$, and $V_{LO}$, if established, and their significance.

(3) In addition, for turbine powered commuter category airplanes—

(i) The maximum operating limit speed, $V_{MO}/M_{MO}$ and a statement that this speed must not be deliberately exceeded in any regime of flight (climb, cruise or descent) unless a higher speed

is authorized for flight test or pilot training;

(ii) If an airspeed limitation is based upon compressibility effects, a statement to this effect and information as to any symptoms, the probable behavior of the airplane, and the recommended recovery procedures; and

(iii) The airspeed limits must be shown in terms of $V_{MO}/M_{MO}$ instead of $V_{NO}$ and $V_{NE}$.

(b) *Powerplant limitations.* The following information must be furnished:

(1) Limitations required by § 23.1521.

(2) Explanation of the limitations, when appropriate.

(3) Information necessary for marking the instruments required by § 23.1549 through § 23.1553.

(c) *Weight.* The airplane flight manual must include—

(1) The maximum weight; and

(2) The maximum landing weight, if the design landing weight selected by the applicant is less than the maximum weight.

(3) For normal, utility, and acrobatic category reciprocating engine-powered airplanes of more than 6,000 pounds maximum weight and for turbine engine-powered airplanes in the normal, utility, and acrobatic category, performance operating limitations as follows—

(i) The maximum takeoff weight for each airport altitude and ambient temperature within the range selected by the applicant at which the airplane complies with the climb requirements of § 23.63(c)(1).

(ii) The maximum landing weight for each airport altitude and ambient temperature within the range selected by the applicant at which the airplane complies with the climb requirements of § 23.63(c)(2).

(4) For commuter category airplanes, the maximum takeoff weight for each airport altitude and ambient temperature within the range selected by the applicant at which—

(i) The airplane complies with the climb requirements of § 23.63(d)(1); and

(ii) The accelerate-stop distance determined under § 23.55 is equal to the available runway length plus the length of any stopway, if utilized; and either:

(iii) The takeoff distance determined under § 23.59(a) is equal to the available runway length; or

(iv) At the option of the applicant, the takeoff distance determined under § 23.59(a) is equal to the available runway length plus the length of any clearway and the takeoff run determined under § 23.59(b) is equal to the available runway length.

(5) For commuter category airplanes, the maximum landing weight for each airport altitude within the range selected by the applicant at which—

(i) The airplane complies with the climb requirements of § 23.63(d)(2) for ambient temperatures within the range selected by the applicant; and

(ii) The landing distance determined under § 23.75 for standard temperatures is equal to the available runway length.

(6) The maximum zero wing fuel weight, where relevant, as established in accordance with § 23.343.

(d) *Center of gravity.* The established center of gravity limits.

(e) *Maneuvers.* The following authorized maneuvers, appropriate airspeed limitations, and unauthorized maneuvers, as prescribed in this section.

(1) *Normal category airplanes.* No acrobatic maneuvers, including spins, are authorized.

(2) *Utility category airplanes.* A list of authorized maneuvers demonstrated in the type flight tests, together with recommended entry speeds and any other associated limitations. No other maneuver is authorized.

(3) *Acrobatic category airplanes.* A list of approved flight maneuvers demonstrated in the type flight tests, together with recommended entry speeds and any other associated limitations.

(4) *Acrobatic category airplanes and utility category airplanes approved for spinning.* Spin recovery procedure established to show compliance with § 23.221(c).

(5) *Commuter category airplanes.* Maneuvers are limited to any maneuver incident to normal flying, stalls, (except whip stalls) and steep turns in which the angle of bank is not more than 60 degrees.

(f) *Maneuver load factor.* The positive limit load factors in g's, and, in addition, the negative limit load factor for acrobatic category airplanes.

(g) *Minimum flight crew.* The number and functions of the minimum flight crew determined under § 23.1523.

(h) *Kinds of operation.* A list of the kinds of operation to which the airplane is limited or from which it is prohibited under § 23.1525, and also a list of installed equipment that affects any operating limitation and identification as to the equipment's required operational status for the kinds of operation for which approval has been given.

(i) *Maximum operating altitude.* The maximum altitude established under § 23.1527.

(j) *Maximum passenger seating configuration.* The maximum passenger seating configuration.

(k) *Allowable lateral fuel loading.* The maximum allowable lateral fuel loading differential, if less than the maximum possible.

(l) *Baggage and cargo loading.* The following information for each baggage and cargo compartment or zone—

(1) The maximum allowable load; and

(2) The maximum intensity of loading.

(m) *Systems.* Any limitations on the use of airplane systems and equipment.

(n) *Ambient temperatures.* Where appropriate, maximum and minimum ambient air temperatures for operation.

(o) *Smoking.* Any restrictions on smoking in the airplane.

(p) *Types of surface.* A statement of the types of surface on which operations may be conducted. (See § 23.45(g) and § 23.1587 (a)(4), (c)(2), and (d)(4)).

[Doc. No. 4080, 29 FR 17955, Dec. 18, 1964, as amended by Amdt. 23–7, 34 FR 13097, Aug. 13, 1969; Amdt. 23–10, 36 FR 2864, Feb. 11, 1971; Amdt. 23–21, 43 FR 2320, Jan. 16, 1978; Amdt. 23–23, 43 FR 50594, Oct. 30, 1978; Amdt. 23–34, 52 FR 1834, Jan. 15, 1987; Amdt. 23–45, 58 FR 42166, Aug. 6, 1993; Amdt. 23–50, 61 FR 5193, Feb. 9, 1996]

### § 23.1585 Operating procedures.

(a) For all airplanes, information concerning normal, abnormal (if applicable), and emergency procedures and other pertinent information necessary for safe operation and the achievement of the scheduled performance must be furnished, including—

(1) An explanation of significant or unusual flight or ground handling characteristics;

(2) The maximum demonstrated values of crosswind for takeoff and landing, and procedures and information pertinent to operations in crosswinds;

(3) A recommended speed for flight in rough air. This speed must be chosen to protect against the occurrence, as a result of gusts, of structural damage to the airplane and loss of control (for example, stalling);

(4) Procedures for restarting any turbine engine in flight, including the effects of altitude; and

(5) Procedures, speeds, and configuration(s) for making a normal approach and landing, in accordance with §§ 23.73 and 23.75, and a transition to the balked landing condition.

(6) For seaplanes and amphibians, water handling procedures and the demonstrated wave height.

(b) In addition to paragraph (a) of this section, for all single-engine airplanes, the procedures, speeds, and configuration(s) for a glide following engine failure, in accordance with § 23.71 and the subsequent forced landing, must be furnished.

(c) In addition to paragraph (a) of this section, for all multiengine airplanes, the following information must be furnished:

(1) Procedures, speeds, and configuration(s) for making an approach and landing with one engine inoperative;

(2) Procedures, speeds, and configuration(s) for making a balked landing with one engine inoperative and the conditions under which a balked landing can be performed safely, or a warning against attempting a balked landing;

(3) The $V_{SSE}$ determined in § 23.149; and

(4) Procedures for restarting any engine in flight including the effects of altitude.

(d) In addition to paragraphs (a) and either (b) or (c) of this section, as appropriate, for all normal, utility, and acrobatic category airplanes, the following information must be furnished:

(1) Procedures, speeds, and configuration(s) for making a normal takeoff, in

accordance with §23.51 (a) and (b), and §23.53 (a) and (b), and the subsequent climb, in accordance with §23.65 and §23.69(a).

(2) Procedures for abandoning a takeoff due to engine failure or other cause.

(e) In addition to paragraphs (a), (c), and (d) of this section, for all normal, utility, and acrobatic category multiengine airplanes, the information must include the following:

(1) Procedures and speeds for continuing a takeoff following engine failure and the conditions under which takeoff can safely be continued, or a warning against attempting to continue the takeoff.

(2) Procedures, speeds, and configurations for continuing a climb following engine failure, after takeoff, in accordance with §23.67, or enroute, in accordance with §23.69(b).

(f) In addition to paragraphs (a) and (c) of this section, for commuter category airplanes, the information must include the following:

(1) Procedures, speeds, and configuration(s) for making a normal takeoff.

(2) Procedures and speeds for carrying out an accelerate-stop in accordance with §23.55.

(3) Procedures and speeds for continuing a takeoff following engine failure in accordance with §23.59(a)(1) and for following the flight path determined under §23.57 and §23.61(a).

(g) For multiengine airplanes, information identifying each operating condition in which the fuel system independence prescribed in §23.953 is necessary for safety must be furnished, together with instructions for placing the fuel system in a configuration used to show compliance with that section.

(h) For each airplane showing compliance with §23.1353 (g)(2) or (g)(3), the operating procedures for disconnecting the battery from its charging source must be furnished.

(i) Information on the total quantity of usable fuel for each fuel tank, and the effect on the usable fuel quantity, as a result of a failure of any pump, must be furnished.

(j) Procedures for the safe operation of the airplane's systems and equipment, both in normal use and in the event of malfunction, must be furnished.

[Doc. No. 27807, 61 FR 5194, Feb. 9, 1996]

**§23.1587 Performance information.**

Unless otherwise prescribed, performance information must be provided over the altitude and temperature ranges required by §23.45(b).

(a) For all airplanes, the following information must be furnished—

(1) The stalling speeds $V_{SO}$ and $V_{S1}$ with the landing gear and wing flaps retracted, determined at maximum weight under §23.49, and the effect on these stalling speeds of angles of bank up to 60 degrees;

(2) The steady rate and gradient of climb with all engines operating, determined under §23.69(a);

(3) The landing distance, determined under §23.75 for each airport altitude and standard temperature, and the type of surface for which it is valid;

(4) The effect on landing distances of operation on other than smooth hard surfaces, when dry, determined under §23.45(g); and

(5) The effect on landing distances of runway slope and 50 percent of the headwind component and 150 percent of the tailwind component.

(b) In addition to paragraph (a) of this section, for all normal, utility, and acrobatic category reciprocating engine-powered airplanes of 6,000 pounds or less maximum weight, the steady angle of climb/descent, determined under §23.77(a), must be furnished.

(c) In addition to paragraphs (a) and (b) of this section, if appropriate, for normal, utility, and acrobatic category airplanes, the following information must be furnished—

(1) The takeoff distance, determined under §23.53 and the type of surface for which it is valid.

(2) The effect on takeoff distance of operation on other than smooth hard surfaces, when dry, determined under §23.45(g);

(3) The effect on takeoff distance of runway slope and 50 percent of the headwind component and 150 percent of the tailwind component;

(4) For multiengine reciprocating engine-powered airplanes of more than 6,000 pounds maximum weight and multiengine turbine powered airplanes, the

one-engine-inoperative takeoff climb/descent gradient, determined under § 23.66;

(5) For multiengine airplanes, the enroute rate and gradient of climb/descent with one engine inoperative, determined under § 23.69(b); and

(6) For single-engine airplanes, the glide performance determined under § 23.71.

(d) In addition to paragraph (a) of this section, for commuter category airplanes, the following information must be furnished—

(1) The accelerate-stop distance determined under § 23.55;

(2) The takeoff distance determined under § 23.59(a);

(3) At the option of the applicant, the takeoff run determined under § 23.59(b);

(4) The effect on accelerate-stop distance, takeoff distance and, if determined, takeoff run, of operation on other than smooth hard surfaces, when dry, determined under § 23.45(g);

(5) The effect on accelerate-stop distance, takeoff distance, and if determined, takeoff run, of runway slope and 50 percent of the headwind component and 150 percent of the tailwind component;

(6) The net takeoff flight path determined under § 23.61(b);

(7) The enroute gradient of climb/descent with one engine inoperative, determined under § 23.69(b);

(8) The effect, on the net takeoff flight path and on the enroute gradient of climb/descent with one engine inoperative, of 50 percent of the headwind component and 150 percent of the tailwind component;

(9) Overweight landing performance information (determined by extrapolation and computed for the range of weights between the maximum landing and maximum takeoff weights) as follows—

(i) The maximum weight for each airport altitude and ambient temperature at which the airplane complies with the climb requirements of § 23.63(d)(2); and

(ii) The landing distance determined under § 23.75 for each airport altitude and standard temperature.

(10) The relationship between IAS and CAS determined in accordance with § 23.1323 (b) and (c).

(11) The altimeter system calibration required by § 23.1325(e).

[Doc. No. 27807, 61 FR 5194, Feb. 9, 1996]

### § 23.1589 Loading information.

The following loading information must be furnished:

(a) The weight and location of each item of equipment that can be easily removed, relocated, or replaced and that is installed when the airplane was weighed under the requirement of § 23.25.

(b) Appropriate loading instructions for each possible loading condition between the maximum and minimum weights established under § 23.25, to facilitate the center of gravity remaining within the limits established under § 23.23.

[Doc. No. 4080, 29 FR 17955, Dec. 18, 1964, as amended by Amdt. 23–45, 58 FR 42167, Aug. 6, 1993; Amdt. 23–50, 61 FR 5195, Feb. 9, 1996]

## APPENDIX A TO PART 23—SIMPLIFIED DESIGN LOAD CRITERIA

### A23.1 *General.*

(a) The design load criteria in this appendix are an approved equivalent of those in §§ 23.321 through 23.459 of this subchapter for an airplane having a maximum weight of 6,000 pounds or less and the following configuration:

(1) A single engine excluding turbine powerplants;

(2) A main wing located closer to the airplane's center of gravity than to the aft, fuselage-mounted, empennage;

(3) A main wing that contains a quarter-chord sweep angle of not more than 15 degrees fore or aft;

(4) A main wing that is equipped with trailing-edge controls (ailerons or flaps, or both);

(5) A main wing aspect ratio not greater than 7;

(6) A horizontal tail aspect ratio not greater than 4;

(7) A horizontal tail volume coefficient not less than 0.34;

(8) A vertical tail aspect ratio not greater than 2;

(9) A vertical tail platform area not greater than 10 percent of the wing platform area; and

(10) Symmetrical airfoils must be used in both the horizontal and vertical tail designs.

(b) Appendix A criteria may not be used on any airplane configuration that contains any of the following design features:

(1) Canard, tandem-wing, close-coupled, or tailless arrangements of the lifting surfaces;

(2) Biplane or multiplane wing arrangements;

(3) T-tail, V-tail, or cruciform-tail (+) arrangements;

(4) Highly-swept wing platform (more than 15-degrees of sweep at the quarter-chord), delta planforms, or slatted lifting surfaces; or

(5) Winglets or other wing tip devices, or outboard fins.

A23.3 *Special symbols.*

$n_1$ =Airplane Positive Maneuvering Limit Load Factor.

$n_2$ =Airplane Negative Maneuvering Limit Load Factor.

$n_3$ =Airplane Positive Gust Limit Load Factor at $V_C$.

$n_4$ =Airplane Negative Gust Limit Load Factor at $V_C$.

$n_{flap}$ =Airplane Positive Limit Load Factor With Flaps Fully Extended at $V_F$.

$$* V_{F\,min} = \text{Minimum Design Flap Speed} = 11.0\sqrt{n_1 W/S} \quad [\text{kts}]$$

$$* V_{A\,min} = \text{Minimum Design Maneuvering Speed} = 15.0\sqrt{n_1 W/S} \quad [\text{kts}]$$

$$* V_{C\,min} = \text{Minimum Design Cruising Speed} = 17.0\sqrt{n_1 W/S} \quad [\text{kts}]$$

$$* V_{D\,min} = \text{Minimum Design Dive Speed} = 24.0\sqrt{n_1 W/S} \quad [\text{kts}]$$

A23.5 *Certification in more than one category.*

The criteria in this appendix may be used for certification in the normal, utility, and acrobatic categories, or in any combination of these categories. If certification in more than one category is desired, the design category weights must be selected to make the term " $n_1W$ " constant for all categories or greater for one desired category than for others. The wings and control surfaces (including wing flaps and tabs) need only be investigated for the maximum value of " $n_1W$ ", or for the category corresponding to the maximum design weight, where " $n_1W$ " is constant. If the acrobatic category is selected, a special unsymmetrical flight load investigation in accordance with paragraphs A23.9(c)(2) and A23.11(c)(2) of this appendix must be completed. The wing, wing carry-through, and the horizontal tail structures must be checked for this condition. The basic fuselage structure need only be investigated for the highest load factor design category selected. The local supporting structure for dead weight items need only be designed for the highest load factor imposed when the particular items are installed in the airplane. The engine mount, however, must be designed for a higher side load factor, if certification in the acrobatic category is desired, than that required for certification in the normal and utility categories. When designing for landing loads, the landing gear and the airplane as a whole need only be investigated for the category corresponding to the maximum design weight. These simplifications apply to single-engine aircraft of conventional types for which experience is available, and the Administrator may require additional investigations for aircraft with unusual design features.

A23.7 *Flight loads.*

(a) Each flight load may be considered independent of altitude and, except for the local supporting structure for dead weight items, only the maximum design weight conditions must be investigated.

(b) Table 1 and figures 3 and 4 of this appendix must be used to determine values of $n_1$, $n_2$, $n_3$, and $n_4$, corresponding to the maximum design weights in the desired categories.

(c) Figures 1 and 2 of this appendix must be used to determine values of $n_3$ and $n_4$ corresponding to the minimum flying weights in the desired categories, and, if these load factors are greater than the load factors at the design weight, the supporting structure for dead weight items must be substantiated for the resulting higher load factors.

(d) Each specified wing and tail loading is independent of the center of gravity range. The applicant, however, must select a c.g. range, and the basic fuselage structure must be investigated for the most adverse dead weight loading conditions for the c.g. range selected.

(e) The following loads and loading conditions are the minimums for which strength must be provided in the structure:

(1) *Airplane equilibrium.* The aerodynamic wing loads may be considered to act normal to the relative wind, and to have a magnitude of 1.05 times the airplane normal loads (as determined from paragraphs A23.9 (b) and (c) of this appendix) for the positive flight conditions and a magnitude equal to the airplane normal loads for the negative conditions. Each chordwise and normal component of this wing load must be considered.

(2) *Minimum design airspeeds.* The minimum design airspeeds may be chosen by the applicant except that they may not be less than the minimum speeds found by using figure 3 of this appendix. In addition, $V_{Cmin}$ need not exceed values of 0.9 $V_H$ actually obtained at sea level for the lowest design weight category for which certification is desired. In computing these minimum design airspeeds, $n_1$ may not be less than 3.8.

(3) *Flight load factor.* The limit flight load factors specified in Table 1 of this appendix represent the ratio of the aerodynamic force component (acting normal to the assumed longitudinal axis of the airplane) to the weight of the airplane. A positive flight load

factor is an aerodynamic force acting upward, with respect to the airplane.

A23.9 *Flight conditions.*

(a) *General.* Each design condition in paragraphs (b) and (c) of this section must be used to assure sufficient strength for each condition of speed and load factor on or within the boundary of a $V-n$ diagram for the airplane similar to the diagram in figure 4 of this appendix. This diagram must also be used to determine the airplane structural operating limitations as specified in §§23.1501(c) through 23.1513 and §23.1519.

(b) *Symmetrical flight conditions.* The airplane must be designed for symmetrical flight conditions as follows:

(1) The airplane must be designed for at least the four basic flight conditions, ''A'', ''D'', ''E'', and ''G'' as noted on the flight envelope of figure 4 of this appendix. In addition, the following requirements apply:

(i) The design limit flight load factors corresponding to conditions ''D'' and ''E'' of figure 4 must be at least as great as those specified in Table 1 and figure 4 of this appendix, and the design speed for these conditions must be at least equal to the value of $V_D$ found from figure 3 of this appendix.

(ii) For conditions ''A'' and ''G'' of figure 4, the load factors must correspond to those specified in Table 1 of this appendix, and the design speeds must be computed using these load factors with the maximum static lift coefficient $C_{NA}$ determined by the applicant. However, in the absence of more precise computations, these latter conditions may be based on a value of $C_{NA}$ =±1.35 and the design speed for condition ''A'' may be less than $V_{Amin}$.

(iii) Conditions ''C'' and ''F'' of figure 4 need only be investigated when $n_3$ W/S or $n_4$ W/S are greater than $n_1$ W/S or $n_2$ W/S of this appendix, respectively.

(2) If flaps or other high lift devices intended for use at the relatively low airspeed of approach, landing, and takeoff, are installed, the airplane must be designed for the two flight conditions corresponding to the values of limit flap-down factors specified in Table 1 of this appendix with the flaps fully extended at not less than the design flap speed $V_{Fmin}$ from figure 3 of this appendix.

(c) *Unsymmetrical flight conditions.* Each affected structure must be designed for unsymmetrical loadings as follows:

(1) The aft fuselage-to-wing attachment must be designed for the critical vertical surface load determined in accordance with paragraph SA23.11(c)(1) and (2) of this appendix.

(2) The wing and wing carry-through structures must be designed for 100 percent of condition ''A'' loading on one side of the plane of symmetry and 70 percent on the opposite side for certification in the normal and utility categories, or 60 percent on the opposite side for certification in the acrobatic category.

(3) The wing and wing carry-through structures must be designed for the loads resulting from a combination of 75 percent of the positive maneuvering wing loading on both sides of the plane of symmetry and the maximum wing torsion resulting from aileron displacement. The effect of aileron displacement on wing torsion at $V_C$ or $V_A$ using the basic airfoil moment coefficient modified over the aileron portion of the span, must be computed as follows:

(i) $Cm=Cm$ +0.01δμ (up aileron side) wing basic airfoil.

(ii) $Cm=Cm$ −0.01δμ(down aileron side) wing basic airfoil, where δμ is the up aileron deflection and δ d is the down aileron deflection.

(4) Δ critical, which is the sum of δμ+δ d must be computed as follows:

(i) Compute Δα and ΔB from the formulas:

$$\Delta_a = \frac{V_A}{V_C} \times \Delta_p \quad \text{and}$$

$$\Delta_b = 0.5\frac{V_A}{V_D} \times \Delta_p$$

Where ΔP = the maximum total deflection (sum of both aileron deflections) at $V_A$ with $V_A$, $V_C$, and $V_D$ described in subparagraph (2) of §23.7(e) of this appendix.

(ii) Compute $K$ from the formula:

$$K = \frac{\left(C_m - 0.01\delta_b\right)V_D^2}{\left(C_m - 0.01\delta_a\right)V_C^2}$$

where δα is the down aileron deflection corresponding to Δα, and δ b is the down aileron deflection corresponding to Δ b as computed in step (i).

(iii) If $K$ is less than 1.0, Δα is Δ critical and must be used to determine δU and δ*d*. In this case, $V_C$ is the critical speed which must be used in computing the wing torsion loads over the aileron span.

(iv) If $K$ is equal to or greater than 1.0, ΔB is Δ critical and must be used to determine δU and δD. In this case, $V_d$ is the critical speed which must be used in computing the wing torsion loads over the aileron span.

(d) *Supplementary conditions; rear lift truss; engine torque; side load on engine mount.* Each of the following supplementary conditions must be investigated:

(1) In designing the rear lift truss, the special condition specified in §23.369 may be investigated instead of condition ''G'' of figure 4 of this appendix. If this is done, and if certification in more than one category is desired, the value of *W/S* used in the formula

appearing in §23.369 must be that for the category corresponding to the maximum gross weight.

(2) Each engine mount and its supporting structures must be designed for the maximum limit torque corresponding to METO power and propeller speed acting simultaneously with the limit loads resulting from the maximum positive maneuvering flight load factor $n_1$. The limit torque must be obtained by multiplying the mean torque by a factor of 1.33 for engines with five or more cylinders. For 4, 3, and 2 cylinder engines, the factor must be 2, 3, and 4, respectively.

(3) Each engine mount and its supporting structure must be designed for the loads resulting from a lateral limit load factor of not less than 1.47 for the normal and utility categories, or 2.0 for the acrobatic category.

A23.11 *Control surface loads.*

(a) *General.* Each control surface load must be determined using the criteria of paragraph (b) of this section and must lie within the simplified loadings of paragraph (c) of this section.

(b) *Limit pilot forces.* In each control surface loading condition described in paragraphs (c) through (e) of this section, the airloads on the movable surfaces and the corresponding deflections need not exceed those which could be obtained in flight by employing the maximum limit pilot forces specified in the table in §23.397(b). If the surface loads are limited by these maximum limit pilot forces, the tabs must either be considered to be deflected to their maximum travel in the direction which would assist the pilot or the deflection must correspond to the maximum degree of ''out of trim'' expected at the speed for the condition under consideration. The tab load, however, need not exceed the value specified in Table 2 of this appendix.

(c) *Surface loading conditions.* Each surface loading condition must be investigated as follows:

(1) Simplified limit surface loadings for the horizontal tail, vertical tail, aileron, wing flaps, and trim tabs are specified in figures 5 and 6 of this appendix.

(i) The distribution of load along the span of the surface, irrespective of the chordwise load distribution, must be assumed proportional to the total chord, except on horn balance surfaces.

(ii) The load on the stabilizer and elevator, and the load on fin and rudder, must be distributed chordwise as shown in figure 7 of this appendix.

(iii) In order to ensure adequate torsional strength and to account for maneuvers and gusts, the most severe loads must be considered in association with every center of pressure position between the leading edge and the half chord of the mean chord of the surface (stabilizer and elevator, or fin and rudder).

(iv) To ensure adequate strength under high leading edge loads, the most severe stabilizer and fin loads must be further considered as being increased by 50 percent over the leading 10 percent of the chord with the loads aft of this appropriately decreased to retain the same total load.

(v) The most severe elevator and rudder loads should be further considered as being distributed parabolically from three times the mean loading of the surface (stabilizer and elevator, or fin and rudder) at the leading edge of the elevator and rudder, respectively, to zero at the trailing edge according to the equation:

$$P(x) = 3(\overline{w})\frac{(c-x)^2}{c_f^{\,2}}$$

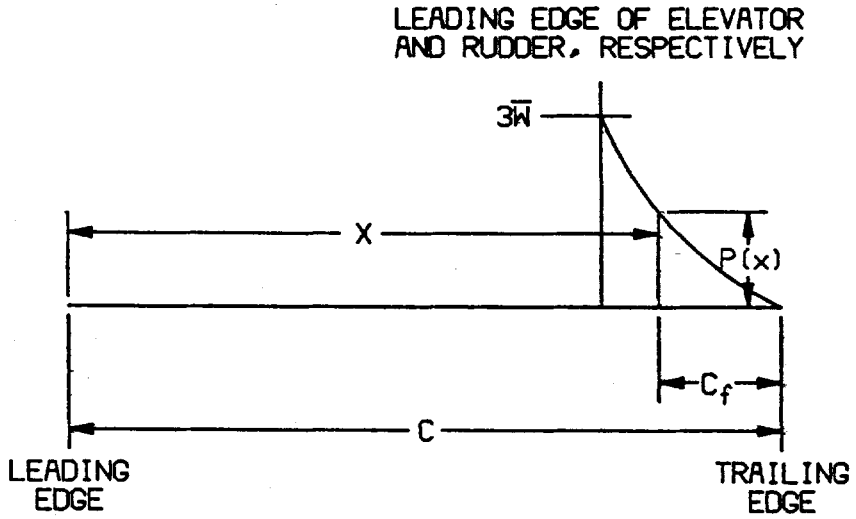


Where—

P(x)=local pressure at the chordwise stations x,

c=chord length of the tail surface,

$c_f$=chord length of the elevator and rudder respectively, and

$\bar{w}$≤=average surface loading as specified in Figure A5.

(vi) The chordwise loading distribution for ailerons, wing flaps, and trim tabs are specified in Table 2 of this appendix.

(2) If certification in the acrobatic category is desired, the horizontal tail must be investigated for an unsymmetrical load of 100 percent *w* on one side of the airplane centerline and 50 percent on the other side of the airplane centerline.

(d) *Outboard fins.* Outboard fins must meet the requirements of §23.445.

(e) *Special devices.* Special devices must meet the requirements of §23.459.

A23.13 *Control system loads.*

(a) *Primary flight controls and systems.* Each primary flight control and system must be designed as follows:

(1) The flight control system and its supporting structure must be designed for loads corresponding to 125 percent of the computed hinge moments of the movable control surface in the conditions prescribed in A23.11 of this appendix. In addition—

(i) The system limit loads need not exceed those that could be produced by the pilot and automatic devices operating the controls; and

(ii) The design must provide a rugged system for service use, including jamming, ground gusts, taxiing downwind, control inertia, and friction.

(2) Acceptable maximum and minimum limit pilot forces for elevator, aileron, and rudder controls are shown in the table in §23.397(b). These pilots loads must be assumed to act at the appropriate control grips or pads as they would under flight conditions, and to be reacted at the attachments of the control system to the control surface horn.

(b) *Dual controls.* If there are dual controls, the systems must be designed for pilots operating in opposition, using individual pilot loads equal to 75 percent of those obtained in accordance with paragraph (a) of this section, except that individual pilot loads may not be less than the minimum limit pilot forces shown in the table in §23.397(b).

(c) *Ground gust conditions.* Ground gust conditions must meet the requirements of §23.415.

(d) *Secondary controls and systems.* Secondary controls and systems must meet the requirements of §23.405.

TABLE 1—LIMIT FLIGHT LOAD FACTORS

[Limit flight load factors]

| Flight load factors | Normal category | Utility category | Acrobatic category |
|---|---|---|---|
| Flaps up: | | | |
| $n_1$ | 3.8 | 4.4 | 6.0 |
| $n_2$ | −0.5 $n_1$ | | |
| $n_3$ | (1) | | |
| $n_4$ | (2) | | |
| Flaps down: | | | |
| *n flap* | 0.5 $n_1$ | | |
| *n flap* | [3] Zero | | |

[1] Find $n_3$ from Fig. 1

[2] Find $n_4$ from Fig. 2

[3] Vertical wing load may be assumed equal to zero and only the flap part of the wing need be checked for this condition.

**Table 2 - Average limit control surface loading**

| AVERAGE LIMIT CONTROL SURFACE LOADING | | | |
|---|---|---|---|
| SURFACE | DIRECTION OF LOADING | MAGNITUDE OF LOADING | CHORDWISE DISTRIBUTION |
| Horizontal Tail I | a) Up and Down | Figure A5 Curve (2) | See Figure A7 |
| | b) Unsymmetrical Loading (Up and Down) | 100% $\bar{w}$ on one side of airplane ℄<br>65% $\bar{w}$ on other side of airplane ℄ for normal and utility categories.<br>For acrobatic category see A23.11(c) | |
| Vertical Tail II | Right and Left | Figure A5 Curve (1) | Same as above |
| Aileron III | a) Up and Down | Figure A6 Curve (5) | (C) 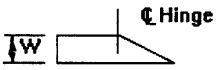  |
| Wing Flap IV | a) Up | Figure A6 Curve (4) | (D) |
| | b) Down | .25 x Up Load (a) | |
| Trim Tab V | a) Up and Down | Figure A6 Curve (3) | Same as (D) above |

NOTE: The surface loading I, II, III, and V above are based on speeds $V_A$ min and $V_C$ min.

The loading of IV is based on $V_F$ min.

If values of speed <u>greater than</u> these minimums are selected for design, the appropriate surface loadings must be multiplied by the ratio $\left(\frac{V_{selected}}{V_{minimum}}\right)^2$.

For conditions I, II, III, and V the multiplying factor used must be the higher of

$$\left(\frac{V_A \text{ sel.}}{V_A \text{ min.}}\right)^2 \text{ or } \left(\frac{V_C \text{ sel.}}{V_C \text{ min.}}\right)^2$$

FIGURE A1—CHART FOR FINDING $n_3$ FACTOR AT SPEED $V_c$

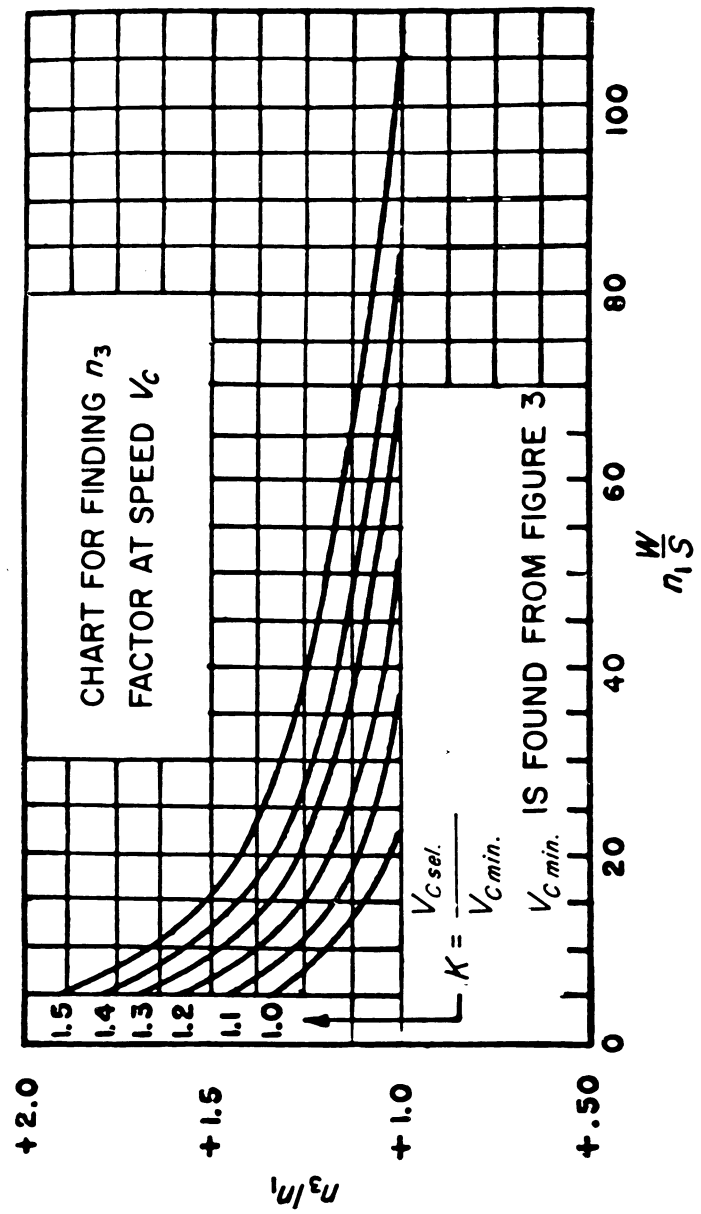

FIGURE A2 – CHART FOR FINDING $n_4$ FACTOR AT SPEED $V_C$

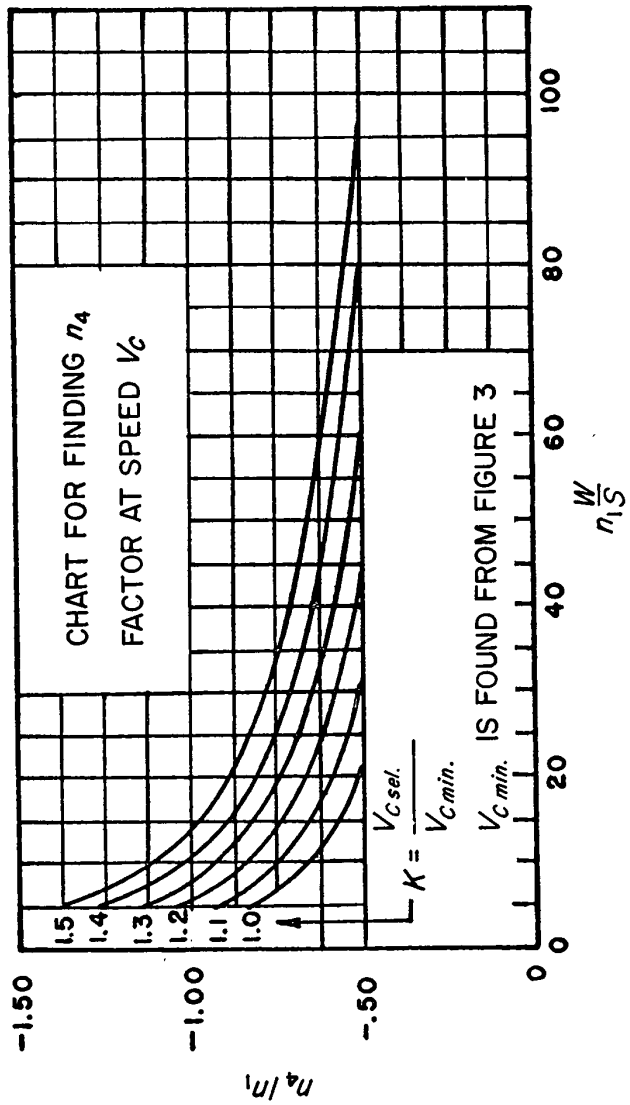

FIGURE A3—DETERMINATIONS OF MINIMUM DESIGN SPEEDS—EQUATIONS
SPEEDS ARE IN KNOTS

$V_{D\ min} = 24.0\sqrt{n_1 \frac{W}{S}}$ but need not exceed $\frac{1.4\sqrt{n_1}}{3.8} V_{C\ min}$;

$V_{C\ min} = 17.0\sqrt{n_1 \frac{W}{S}}$ but need not exceed 0.9 $V_E$; $V_{A\ min} = 15.0\sqrt{n_1 \frac{W}{S}}$ but need not exceed $V_C$ used in design. $V_{F\ min} = 11.0\sqrt{n_1 \frac{W}{S}}$

FIGURE A-4—FLIGHT ENVELOPE

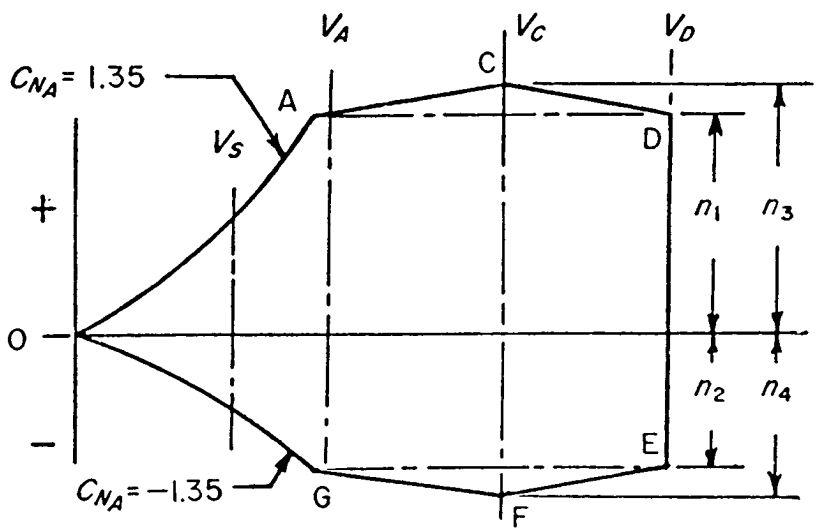


1. Conditions "C" or "F" need only be investigated when $n_3 \frac{W}{S}$ or $n_4 \frac{W}{S}$ is greater than $n_1 \frac{W}{S}$ $W/S$, respectively.

2. Condition "G" need not be investigated when the supplementary condition specified in § 23.369 is investigated.

FIGURE A5 – AVERAGE LIMIT CONTROL SURFACE LOADING

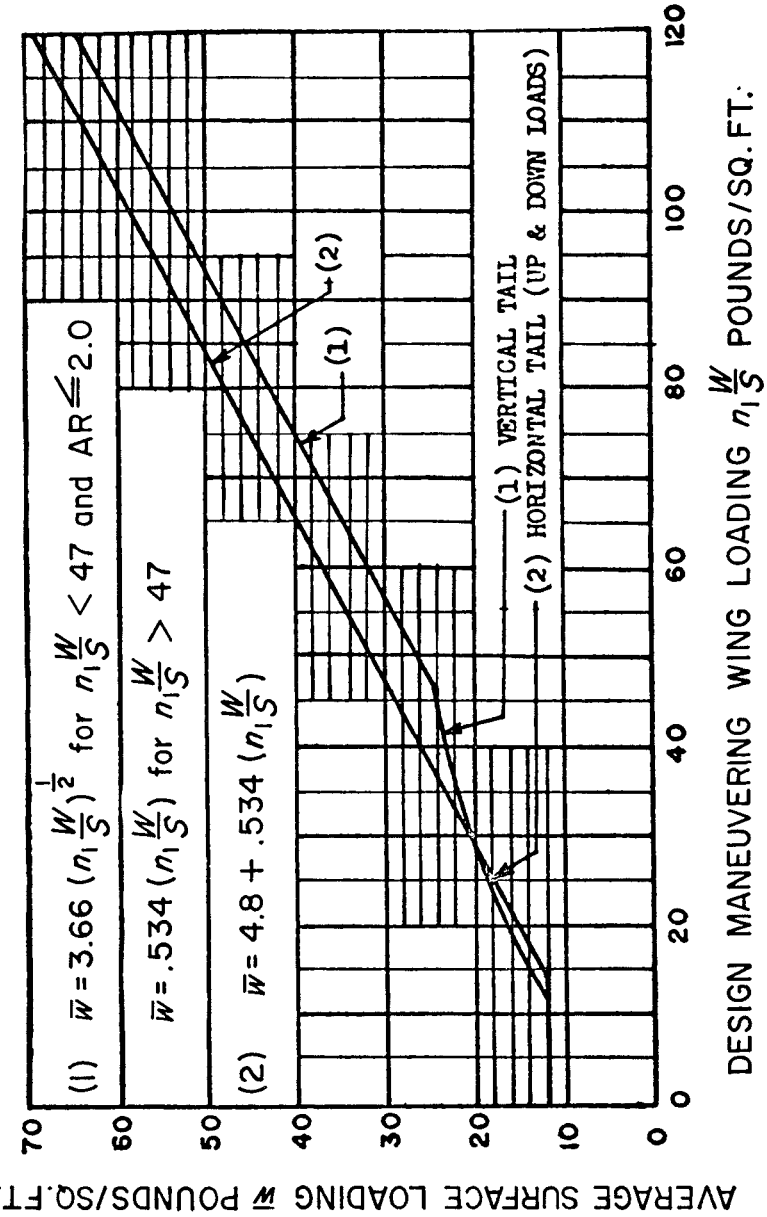

FIGURE A6 – AVERAGE LIMIT CONTROL SURFACE LOADING

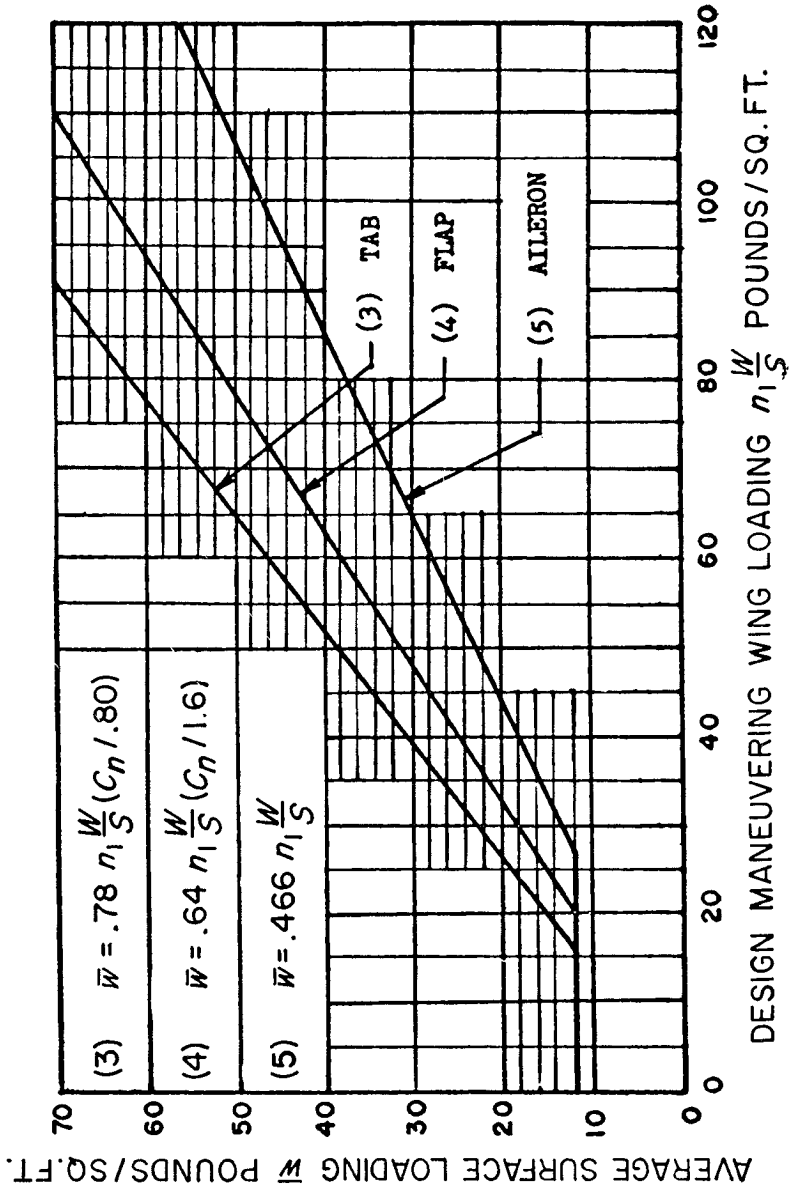

FIGURE A7.—CHORDWISE LOAD DISTRIBUTION FOR STABILIZER AND ELEVATOR OR FIN AND RUDDER

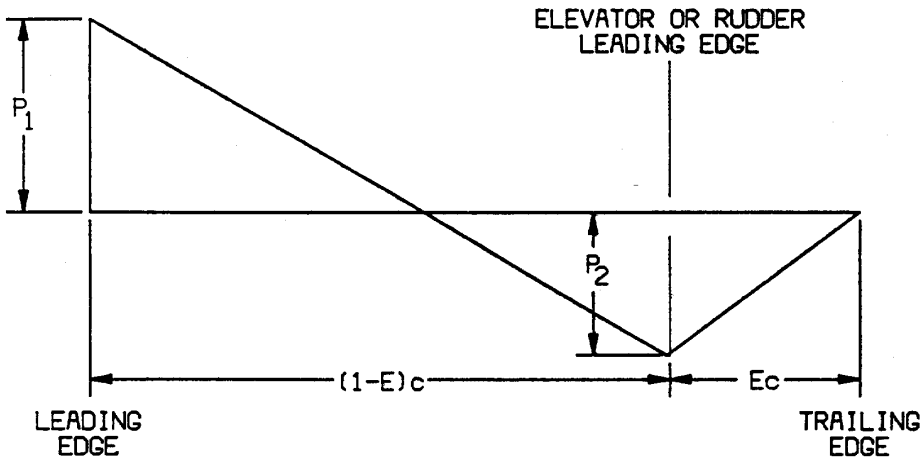


$$P_1 = 2\,(\overline{w})\,\frac{(2-E-3d')}{(1-E)}$$

$$P_2 = 2\,(\overline{w})\,(3d'+E-1)$$

where:

$\bar{w}$=average surface loading (as specified in figure A.5)

E=ratio of elevator (or rudder) chord to total stabilizer and elevator (or fin and rudder) chord.

d′=ratio of distance of center of pressure of a unit spanwise length of combined stabilizer and elevator (or fin and rudder) measured from stabilizer (or fin) leading edge to the local chord. Sign convention is positive when center of pressure is behind leading edge.

c=local chord.

NOTE: Positive values of $\bar{w}$, $P_1$ and $P_2$ are all measured in the same direction.

[Doc. No. 4080, 29 FR 17955, Dec. 18, 1964, as amended by Amdt. 23–7, 34 FR 13097, Aug. 13, 1969; 34 FR 14727, Sept. 24, 1969; Amdt. 23–16, 40 FR 2577, Jan. 14, 1975; Amdt. 23–28, 47 FR 13315, Mar. 29, 1982; Amdt. 23–48, 61 FR 5149, Feb. 9, 1996]

## APPENDIX B TO PART 23 [RESERVED]

## APPENDIX C TO PART 23—BASIC LANDING CONDITIONS

[C23.1 *Basic landing conditions*]

| Condition | Tail wheel type | | Nose wheel type | | |
|---|---|---|---|---|---|
| | Level landing | Tail-down landing | Level landing with inclined reactions | Level landing with nose wheel just clear of ground | Tail-down landing |
| Reference section | 23.479(a)(1) | 23.481(a)(1) | 23.479(a)(2)(i) | 23.479(a)(2)(ii) | 23.481(a)(2) and (b). |
| Vertical component at c. g | *nW* | *nW* | *nW* | *nW* | *nW.* |
| Fore and aft component at c. g | *KnW* | 0 | *KnW* | *KnW* | 0. |
| Lateral component in either direction at c. g. | 0 | 0 | 0 | 0 | 0. |
| Shock absorber extension (hydraulic shock absorber). | Note (2) | Note (2) | Note (2) | Note (2) | Note (2). |
| Shock absorber deflection (rubber or spring shock absorber), percent. | 100 | 100 | 100 | 100 | 100. |
| Tire deflection | Static | Static | Static | Static | Static. |
| Main wheel loads (both wheels) *(Vr)* | *(n-L)W* | *(n–L)W* b/d | *(n-L)W* a′/d′ | *(n-L)W* | *(n-L)W.* |
| Main wheel loads (both wheels) *(Dr)* | *KnW* | 0 | *KnW* a′/d′ | *KnW* | 0. |
| Tail (nose) wheel loads *(Vf)* | 0 | *(n–L)W* a/d | *(n–L)W* b′/d′ | 0 | 0. |
| Tail (nose) wheel loads *(Df)* | 0 | 0 | *KnW* b′/d′ | 0 | 0. |

APPENDIX C TO PART 23—BASIC LANDING CONDITIONS—Continued

[C23.1 *Basic landing conditions*]

| Condition | Tail wheel type | | Nose wheel type | | |
|---|---|---|---|---|---|
| | Level landing | Tail-down landing | Level landing with inclined reactions | Level landing with nose wheel just clear of ground | Tail-down landing |
| Notes | (1), (3), and (4). | (4) | (1) | (1), (3), and (4) | (3) and (4). |

NOTE (1). *K* may be determined as follows: *K*=0.25 for *W*=3,000 pounds or less; *K*=0.33 for *W*=6,000 pounds or greater, with linear variation of *K* between these weights.

NOTE (2). For the purpose of design, the maximum load factor is assumed to occur throughout the shock absorber stroke from 25 percent deflection to 100 percent deflection unless otherwise shown and the load factor must be used with whatever shock absorber extension is most critical for each element of the landing gear.

NOTE (3). Unbalanced moments must be balanced by a rational or conservative method.

NOTE (4). *L* is defined in § 23.735(b).

NOTE (5). *n* is the limit inertia load factor, at the c.g. of the airplane, selected under § 23.473 (d), (f), and (g).

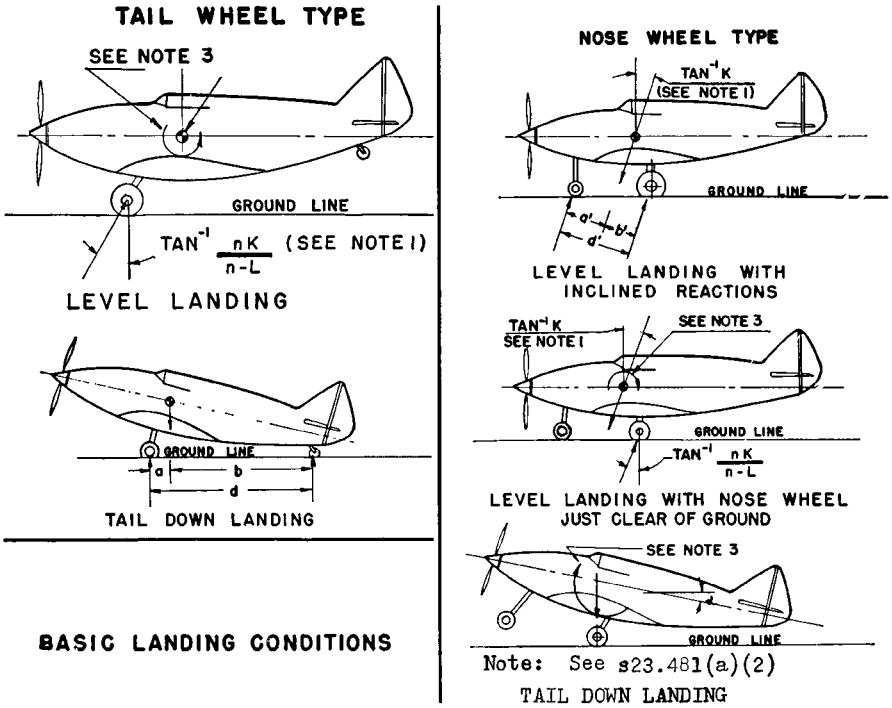


[Doc. No. 4080, 29 FR 17955, Dec. 18, 1964, as amended by Amdt. 23–7, 34 FR 13099, Aug. 13, 1969]

## APPENDIX D TO PART 23—WHEEL SPIN-UP AND SPRING-BACK LOADS

D23.1 *Wheel spin-up loads.*

(a) The following method for determining wheel spin-up loads for landing conditions is based on NACA T.N. 863. However, the drag component used for design may not be less than the drag load prescribed in § 23.479(b).

$$F_{Hmax} = 1/r_e \sqrt{2I_w(V_H - V_c)nF_{Vmax}/t_S}$$

where—

$F_{Hmax}$=maximum rearward horizontal force acting on the wheel (in pounds);

$r_e$=effective rolling radius of wheel under impact based on recommended operating tire pressure (which may be assumed to be equal to the rolling radius under a static load of $n_jW_e$) in feet;

$I_w$=rotational mass moment of inertia of rolling assembly (in slug feet);

$V_H$=linear velocity of airplane parallel to ground at instant of contact (assumed to be 1.2 $V_{S0}$, in feet per second);

$V_c$=peripheral speed of tire, if prerotation is used (in feet per second) (there must be a positive means of pre-rotation before pre-rotation may be considered);

$n$=equals effective coefficient of friction (0.80 may be used);

$F_{Vmax}$=maximum vertical force on wheel (pounds)= $n_j W_e$, where $W_e$ and $n_j$ are defined in §23.725;

$t_s$=time interval between ground contact and attainment of maximum vertical force on wheel (seconds). (However, if the value of $F_{Vmax}$, from the above equation exceeds 0.8 $F_{Vmax}$, the latter value must be used for $F_{Hmax}$.)

(b) The equation assumes a linear variation of load factor with time until the peak load is reached and under this assumption, the equation determines the drag force at the time that the wheel peripheral velocity at radius $r_e$ equals the airplane velocity. Most shock absorbers do not exactly follow a linear variation of load factor with time. Therefore, rational or conservative allowances must be made to compensate for these variations. On most landing gears, the time for wheel spin-up will be less than the time required to develop maximum vertical load factor for the specified rate of descent and forward velocity. For exceptionally large wheels, a wheel peripheral velocity equal to the ground speed may not have been attained at the time of maximum vertical gear load. However, as stated above, the drag spin-up load need not exceed 0.8 of the maximum vertical loads.

(c) Dynamic spring-back of the landing gear and adjacent structure at the instant just after the wheels come up to speed may result in dynamic forward acting loads of considerable magnitude. This effect must be determined, in the level landing condition, by assuming that the wheel spin-up loads calculated by the methods of this appendix are reversed. Dynamic spring-back is likely to become critical for landing gear units having wheels of large mass or high landing speeds.

[Doc. No. 4080, 29 FR 17955, Dec. 18, 1964, as amended by Amdt. 23–45, 58 FR 42167, Aug. 6, 1993]

## APPENDIX E TO PART 23 [RESERVED]

## APPENDIX F TO PART 23—TEST PROCEDURE

Acceptable test procedure for self-extinguishing materials for showing compliance with §§23.853, 23.855 and 23.1359.

(a) *Conditioning.* Specimens must be conditioned to 70 degrees F, plus or minus 5 degrees, and at 50 percent plus or minus 5 percent relative humidity until moisture equilibrium is reached or for 24 hours. Only one specimen at a time may be removed from the conditioning environment immediately before subjecting it to the flame.

(b) *Specimen configuration.* Except as provided for materials used in electrical wire and cable insulation and in small parts, materials must be tested either as a section cut from a fabricated part as installed in the airplane or as a specimen simulating a cut section, such as: a specimen cut from a flat sheet of the material or a model of the fabricated part. The specimen may be cut from any location in a fabricated part; however, fabricated units, such as sandwich panels, may not be separated for a test. The specimen thickness must be no thicker than the minimum thickness to be qualified for use in the airplane, except that: (1) Thick foam parts, such as seat cushions, must be tested in ½ inch thickness; (2) when showing compliance with §23.853(d)(3)(v) for materials used in small parts that must be tested, the materials must be tested in no more than ⅛ inch thickness; (3) when showing compliance with §23.1359(c) for materials used in electrical wire and cable insulation, the wire and cable specimens must be the same size as used in the airplane. In the case of fabrics, both the warp and fill direction of the weave must be tested to determine the most critical flammability conditions. When performing the tests prescribed in paragraphs (d) and (e) of this appendix, the specimen must be mounted in a metal frame so that (1) in the vertical tests of paragraph (d) of this appendix, the two long edges and the upper edge are held securely; (2) in the horizontal test of paragraph (e) of this appendix, the two long edges and the edge away from the flame are held securely; (3) the exposed area of the specimen is at least 2 inches wide and 12 inches long, unless the actual size used in the airplane is smaller; and (4) the edge to which the burner flame is applied must not consist of the finished or protected edge of the specimen but must be representative of the actual cross section of the material or part installed in the airplane. When performing the test prescribed in paragraph (f) of this appendix, the specimen must be mounted in metal frame so that all four edges are held securely and the exposed area of the specimen is at least 8 inches by 8 inches.

(c) *Apparatus.* Except as provided in paragraph (g) of this appendix, tests must be conducted in a draft-free cabinet in accordance with Federal Test Method Standard 191 Method 5903 (revised Method 5902) which is available from the General Services Administration, Business Service Center, Region 3, Seventh and D Streets SW., Washington, D.C. 20407, or with some other approved

equivalent method. Specimens which are too large for the cabinet must be tested in similar draft-free conditions.

(d) *Vertical test.* A minimum of three specimens must be tested and the results averaged. For fabrics, the direction of weave corresponding to the most critical flammability conditions must be parallel to the longest dimension. Each specimen must be supported vertically. The specimen must be exposed to a Bunsen or Tirrill burner with a nominal ⅜-inch I.D. tube adjusted to give a flame of 1½ inches in height. The minimum flame temperature measured by a calibrated thermocouple pryometer in the center of the flame must be 1550° F. The lower edge of the specimen must be three-fourths inch above the top edge of the burner. The flame must be applied to the center line of the lower edge of the specimen. For materials covered by §§23.853(d)(3)(i) and 23.853(f), the flame must be applied for 60 seconds and then removed. For materials covered by §23.853(d)(3)(ii), the flame must be applied for 12 seconds and then removed. Flame time, burn length, and flaming time of drippings, if any, must be recorded. The burn length determined in accordance with paragraph (h) of this appendix must be measured to the nearest one-tenth inch.

(e) *Horizontal test.* A minimum of three specimens must be tested and the results averaged. Each specimen must be supported horizontally. The exposed surface when installed in the airplane must be face down for the test. The specimen must be exposed to a Bunsen burner or Tirrill burner with a nominal ⅜-inch I.D. tube adjusted to give a flame of 1½ inches in height. The minimum flame temperature measured by a calibrated thermocouple pyrometer in the center of the flame must be 1550° F. The specimen must be positioned so that the edge being tested is three-fourths of an inch above the top of, and on the center line of, the burner. The flame must be applied for 15 seconds and then removed. A minimum of 10 inches of the specimen must be used for timing purposes, approximately 1½ inches must burn before the burning front reaches the timing zone, and the average burn rate must be recorded.

(f) *Forty-five degree test.* A minimum of three specimens must be tested and the results averaged. The specimens must be supported at an angle of 45 degrees to a horizontal surface. The exposed surface when installed in the aircraft must be face down for the test. The specimens must be exposed to a Bunsen or Tirrill burner with a nominal ⅜ inch I.D. tube adjusted to give a flame of 1½ inches in height. The minimum flame temperature measured by a calibrated thermocouple pyrometer in the center of the flame must be 1550°F. Suitable precautions must be taken to avoid drafts. The flame must be applied for 30 seconds with one-third contacting the material at the center of the specimen and then removed. Flame time, glow time, and whether the flame penetrates (passes through) the specimen must be recorded.

(g) *Sixty-degree test.* A minimum of three specimens of each wire specification (make and size) must be tested. The specimen of wire or cable (including insulation) must be placed at an angle of 60 degrees with the horizontal in the cabinet specified in paragraph (c) of this appendix, with the cabinet door open during the test or placed within a chamber approximately 2 feet high × 1 foot × 1 foot, open at the top and at one vertical side (front), that allows sufficient flow of air for complete combustion but is free from drafts. The specimen must be parallel to and approximately 6 inches from the front of the chamber. The lower end of the specimen must be held rigidly clamped. The upper end of the specimen must pass over a pulley or rod and must have an appropriate weight attached to it so that the specimen is held tautly throughout the flammability test. The test specimen span between lower clamp and upper pulley or rod must be 24 inches and must be marked 8 inches from the lower end to indicate the central point for flame application. A flame from a Bunsen or Tirrill burner must be applied for 30 seconds at the test mark. The burner must be mounted underneath the test mark on the specimen, perpendicular to the specimen and at an angle of 30 degrees to the vertical plane of the specimen. The burner must have a nominal bore of three-eighths inch, and must be adjusted to provide a three-inch-high flame with an inner cone approximately one-third of the flame height. The minimum temperature of the hottest portion of the flame, as measured with a calibrated thermocouple pyrometer, may not be less than 1,750 °F. The burner must be positioned so that the hottest portion of the flame is applied to the test mark on the wire. Flame time, burn length, and flaming time drippings, if any, must be recorded. The burn length determined in accordance with paragraph (h) of this appendix must be measured to the nearest one-tenth inch. Breaking of the wire specimen is not considered a failure.

(h) *Burn length.* Burn length is the distance from the original edge to the farthest evidence of damage to the test specimen due to flame impingement, including areas of partial or complete consumption, charring, or embrittlement, but not including areas sooted, stained, warped, or discolored, nor areas where material has shrunk or melted away from the heat source.

[Amdt. 23–23, 43 FR 50594, Oct. 30, 1978, as amended by Amdt. 23–34, 52 FR 1835, Jan. 15, 1987; 52 FR 34745, Sept. 14, 1987; Amdt. 23–49, 61 FR 5170, Feb. 9, 1996]

## APPENDIX G TO PART 23—INSTRUCTIONS FOR CONTINUED AIRWORTHINESS

G23.1 *General.* (a) This appendix specifies requirements for the preparation of Instructions for Continued Airworthiness as required by § 23.1529.

(b) The Instructions for Continued Airworthiness for each airplane must include the Instructions for Continued Airworthiness for each engine and propeller (hereinafter designated 'products'), for each appliance required by this chapter, and any required information relating to the interface of those appliances and products with the airplane. If Instructions for Continued Airworthiness are not supplied by the manufacturer of an appliance or product installed in the airplane, the Instructions for Continued Airworthiness for the airplane must include the information essential to the continued airworthiness of the airplane.

(c) The applicant must submit to the FAA a program to show how changes to the Instructions for Continued Airworthiness made by the applicant or by the manufacturers of products and appliances installed in the airplane will be distributed.

G23.2 *Format.* (a) The Instructions for Continued Airworthiness must be in the form of a manual or manuals as appropriate for the quantity of data to be provided.

(b) The format of the manual or manuals must provide for a practical arrangement.

G23.3 *Content.* The contents of the manual or manuals must be prepared in the English language. The Instructions for Continued Airworthiness must contain the following manuals or sections, as appropriate, and information:

(a) *Airplane maintenance manual or section.* (1) Introduction information that includes an explanation of the airplane's features and data to the extent necessary for maintenance or preventive maintenance.

(2) A description of the airplane and its systems and installations including its engines, propellers, and appliances.

(3) Basic control and operation information describing how the airplane components and systems are controlled and how they operate, including any special procedures and limitations that apply.

(4) Servicing information that covers details regarding servicing points, capacities of tanks, reservoirs, types of fluids to be used, pressures applicable to the various systems, location of access panels for inspection and servicing, locations of lubrication points, lubricants to be used, equipment required for servicing, tow instructions and limitations, mooring, jacking, and leveling information.

(b) *Maintenance instructions.* (1) Scheduling information for each part of the airplane and its engines, auxiliary power units, propellers, accessories, instruments, and equipment that provides the recommended periods at which they should be cleaned, inspected, adjusted, tested, and lubricated, and the degree of inspection, the applicable wear tolerances, and work recommended at these periods. However, the applicant may refer to an accessory, instrument, or equipment manufacturer as the source of this information if the applicant shows that the item has an exceptionally high degree of complexity requiring specialized maintenance techniques, test equipment, or expertise. The recommended overhaul periods and necessary cross reference to the Airworthiness Limitations section of the manual must also be included. In addition, the applicant must include an inspection program that includes the frequency and extent of the inspections necessary to provide for the continued airworthiness of the airplane.

(2) Troubleshooting information describing probable malfunctions, how to recognize those malfunctions, and the remedial action for those malfunctions.

(3) Information describing the order and method of removing and replacing products and parts with any necessary precautions to be taken.

(4) Other general procedural instructions including procedures for system testing during ground running, symmetry checks, weighing and determining the center of gravity, lifting and shoring, and storage limitations.

(c) Diagrams of structural access plates and information needed to gain access for inspections when access plates are not provided.

(d) Details for the application of special inspection techniques including radiographic and ultrasonic testing where such processes are specified.

(e) Information needed to apply protective treatments to the structure after inspection.

(f) All data relative to structural fasteners such as identification, discard recommendations, and torque values.

(g) A list of special tools needed.

(h) In addition, for commuter category airplanes, the following information must be furnished:

(1) Electrical loads applicable to the various systems;

(2) Methods of balancing control surfaces;

(3) Identification of primary and secondary structures; and

(4) Special repair methods applicable to the airplane.

G23.4 *Airworthiness Limitations section.* The Instructions for Continued Airworthiness must contain a section titled Airworthiness Limitations that is segregated and clearly

distinguishable from the rest of the document. This section must set forth each mandatory replacement time, structural inspection interval, and related structural inspection procedure required for type certification. If the Instructions for Continued Airworthiness consist of multiple documents, the section required by this paragraph must be included in the principal manual. This section must contain a legible statement in a prominent location that reads: ''The Airworthiness Limitations section is FAA approved and specifies maintenance required under §§43.16 and 91.403 of the Federal Aviation Regulations unless an alternative program has been FAA approved.''

[Amdt. 23–26, 45 FR 60171, Sept. 11, 1980, as amended by Amdt. 23–34, 52 FR 1835, Jan. 15, 1987; 52 FR 34745, Sept. 14, 1987; Amdt. 23–37, 54 FR 34329, Aug. 18, 1989]

## APPENDIX H TO PART 23—INSTALLATION OF AN AUTOMATIC POWER RESERVE (APR) SYSTEM

H23.1, *General.*

(a) This appendix specifies requirements for installation of an APR engine power control system that automatically advances power or thrust on the operating engine(s) in the event any engine fails during takeoff.

(b) With the APR system and associated systems functioning normally, all applicable requirements (except as provided in this appendix) must be met without requiring any action by the crew to increase power or thrust.

H23.2, *Definitions.*

(a) *Automatic power reserve system* means the entire automatic system used only during takeoff, including all devices both mechanical and electrical that sense engine failure, transmit signals, actuate fuel controls or power levers on operating engines, including power sources, to achieve the scheduled power increase and furnish cockpit information on system operation.

(b) *Selected takeoff power,* notwithstanding the definition of ''Takeoff Power'' in part 1 of the Federal Aviation Regulations, means the power obtained from each initial power setting approved for takeoff.

(c) *Critical Time Interval,* as illustrated in figure H1, means that period starting at $V_1$ minus one second and ending at the intersection of the engine and APR failure flight path line with the minimum performance all engine flight path line. The engine and APR failure flight path line intersects the one-engine-inoperative flight path line at 400 feet above the takeoff surface. The engine and APR failure flight path is based on the airplane's performance and must have a positive gradient of at least 0.5 percent at 400 feet above the takeoff surface.

FIGURE H1 - CRITICAL TIME INTERVAL ILLUSTRATION.

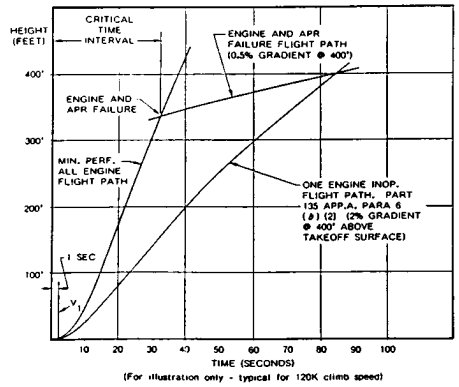


H23.3, *Reliability and performance requirements.*

(a) It must be shown that, during the critical time interval, an APR failure that increases or does not affect power on either engine will not create a hazard to the airplane, or it must be shown that such failures are improbable.

(b) It must be shown that, during the critical time interval, there are no failure modes

of the APR system that would result in a failure that will decrease the power on either engine or it must be shown that such failures are extremely improbable.

(c) It must be shown that, during the critical time interval, there will be no failure of the APR system in combination with an engine failure or it must be shown that such failures are extremely improbable.

(d) All applicable performance requirements must be met with an engine failure occurring at the most critical point during takeoff with the APR system functioning normally.

H23.4, *Power setting.*

The selected takeoff power set on each engine at the beginning of the takeoff roll may not be less than—

(a) The power necessary to attain, at $V_1$, 90 percent of the maximum takeoff power approved for the airplane for the existing conditions;

(b) That required to permit normal operation of all safety-related systems and equipment that are dependent upon engine power or power lever position; and

(c) That shown to be free of hazardous engine response characteristics when power is advanced from the selected takeoff power level to the maximum approved takeoff power.

H23.5, *Powerplant controls—general.*

(a) In addition to the requirements of §23.1141, no single failure or malfunction (or probable combination thereof) of the APR, including associated systems, may cause the failure of any powerplant function necessary for safety.

(b) The APR must be designed to—

(1) Provide a means to verify to the flight crew before takeoff that the APR is in an operating condition to perform its intended function;

(2) Automatically advance power on the operating engines following an engine failure during takeoff to achieve the maximum attainable takeoff power without exceeding engine operating limits;

(3) Prevent deactivation of the APR by manual adjustment of the power levers following an engine failure;

(4) Provide a means for the flight crew to deactivate the automatic function. This means must be designed to prevent inadvertent deactivation; and

(5) Allow normal manual decrease or increase in power up to the maximum takeoff power approved for the airplane under the existing conditions through the use of power levers, as stated in §23.1141(c), except as provided under paragraph (c) of H23.5 of this appendix.

(c) For airplanes equipped with limiters that automatically prevent engine operating limits from being exceeded, other means may be used to increase the maximum level of power controlled by the power levers in the event of an APR failure. The means must be located on or forward of the power levers, must be easily identified and operated under all operating conditions by a single action of any pilot with the hand that is normally used to actuate the power levers, and must meet the requirements of §23.777 (a), (b), and (c).

H23.6, *Powerplant instruments.*

In addition to the requirements of §23.1305:

(a) A means must be provided to indicate when the APR is in the armed or ready condition.

(b) If the inherent flight characteristics of the airplane do not provide warning that an engine has failed, a warning system independent of the APR must be provided to give the pilot a clear warning of any engine failure during takeoff.

(c) Following an engine failure at $V_1$ or above, there must be means for the crew to readily and quickly verify that the APR has operated satisfactorily.

[Doc. 26344, 58 FR 18979, Apr. 9, 1993]

APPENDIX I TO PART 23—SEAPLANE LOADS

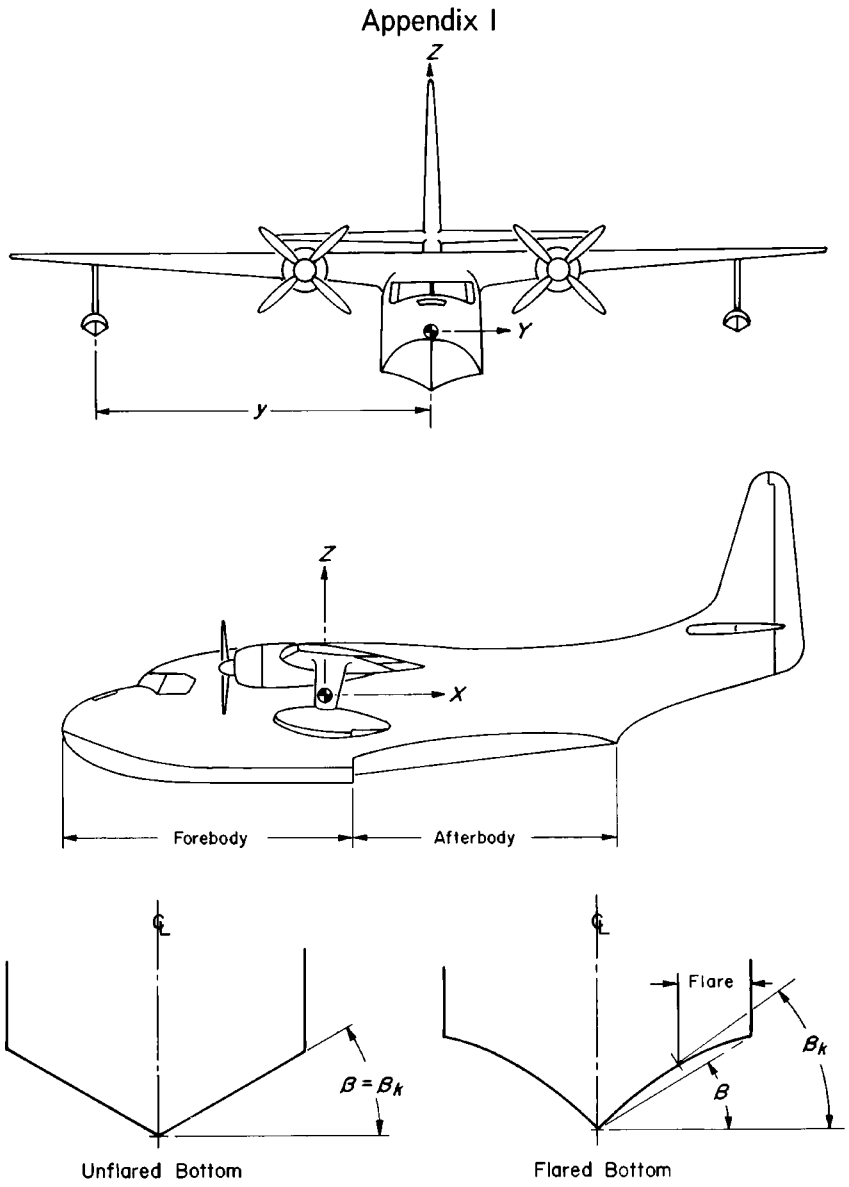


FIGURE 1. Pictorial definition of angles, dimensions, and directions on a seaplane.

Appendix I (continued)

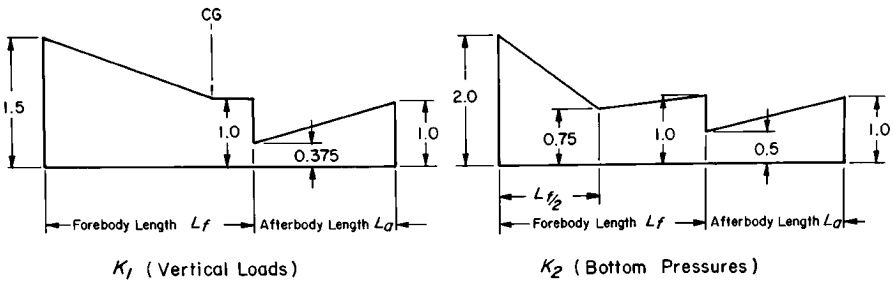


FIGURE 2. Hull station weighing factor.

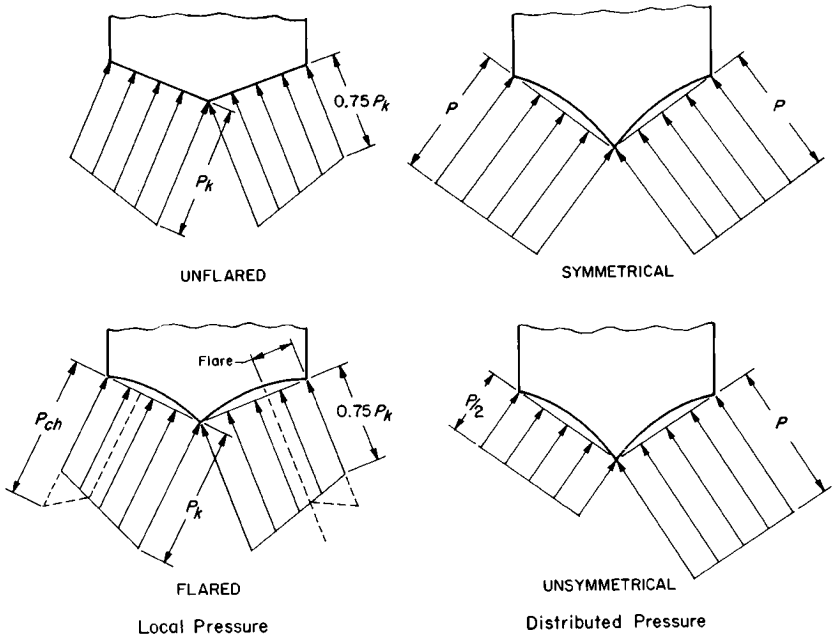


FIGURE 3. Transverse pressure distributions.

[Amdt. 23–45, 58 FR 42167, Aug. 6, 1993; 58 FR 51970, Oct. 5, 1993]