AUTHENTICATED
U.S. GOVERNMENT
INFORMATION
GPO

code of federal regulations

Internal Revenue

26

PART 1 (§§ 1.301 TO 1.400)

Revised as of April 1, 1998

CONTAINING
A CODIFICATION OF DOCUMENTS
OF GENERAL APPLICABILITY
AND FUTURE EFFECT

AS OF APRIL 1, 1998

With Ancillaries

Published by
the Office of the Federal Register
National Archives and Records
Administration

as a Special Edition of
the Federal Register

U.S. GOVERNMENT PRINTING OFFICE
WASHINGTON : 1998

For sale by U.S. Government Printing Office
Superintendent of Documents, Mail Stop: SSOP, Washington, DC 20402–9328

Table of Contents

	Page
Explanation	v
Title 26:	
Chapter I—Internal Revenue Service, Department of the Treasury (Continued)	3
Finding Aids:	
Table of CFR Titles and Chapters	451
Alphabetical List of Agencies Appearing in the CFR	467
Table of OMB Control Numbers	477
List of CFR Sections Affected	493

Cite this Code: CFR

To cite the regulations in this volume use title, part and section number. Thus, 26 CFR 1.301–1 *refers to title 26, part 1, section 301–1.*

Explanation

The Code of Federal Regulations is a codification of the general and permanent rules published in the Federal Register by the Executive departments and agencies of the Federal Government. The Code is divided into 50 titles which represent broad areas subject to Federal regulation. Each title is divided into chapters which usually bear the name of the issuing agency. Each chapter is further subdivided into parts covering specific regulatory areas.

Each volume of the Code is revised at least once each calendar year and issued on a quarterly basis approximately as follows:

Title 1 through Title 16.....as of January 1
Title 17 through Title 27.....as of April 1
Title 28 through Title 41.....as of July 1
Title 42 through Title 50.....as of October 1

The appropriate revision date is printed on the cover of each volume.

LEGAL STATUS

The contents of the Federal Register are required to be judicially noticed (44 U.S.C. 1507). The Code of Federal Regulations is prima facie evidence of the text of the original documents (44 U.S.C. 1510).

HOW TO USE THE CODE OF FEDERAL REGULATIONS

The Code of Federal Regulations is kept up to date by the individual issues of the Federal Register. These two publications must be used together to determine the latest version of any given rule.

To determine whether a Code volume has been amended since its revision date (in this case, April 1, 1998), consult the ''List of CFR Sections Affected (LSA),'' which is issued monthly, and the ''Cumulative List of Parts Affected,'' which appears in the Reader Aids section of the daily Federal Register. These two lists will identify the Federal Register page number of the latest amendment of any given rule.

EFFECTIVE AND EXPIRATION DATES

Each volume of the Code contains amendments published in the Federal Register since the last revision of that volume of the Code. Source citations for the regulations are referred to by volume number and page number of the Federal Register and date of publication. Publication dates and effective dates are usually not the same and care must be exercised by the user in determining the actual effective date. In instances where the effective date is beyond the cutoff date for the Code a note has been inserted to reflect the future effective date. In those instances where a regulation published in the Federal Register states a date certain for expiration, an appropriate note will be inserted following the text.

OMB CONTROL NUMBERS

The Paperwork Reduction Act of 1980 (Pub. L. 96–511) requires Federal agencies to display an OMB control number with their information collection request.

Many agencies have begun publishing numerous OMB control numbers as amendments to existing regulations in the CFR. These OMB numbers are placed as close as possible to the applicable recordkeeping or reporting requirements.

OBSOLETE PROVISIONS

Provisions that become obsolete before the revision date stated on the cover of each volume are not carried. Code users may find the text of provisions in effect on a given date in the past by using the appropriate numerical list of sections affected. For the period before January 1, 1986, consult either the List of CFR Sections Affected, 1949–1963, 1964–1972, or 1973–1985, published in seven separate volumes. For the period beginning January 1, 1986, a ''List of CFR Sections Affected'' is published at the end of each CFR volume.

CFR INDEXES AND TABULAR GUIDES

A subject index to the Code of Federal Regulations is contained in a separate volume, revised annually as of January 1, entitled CFR INDEX AND FINDING AIDS. This volume contains the Parallel Table of Statutory Authorities and Agency Rules (Table I), and Acts Requiring Publication in the Federal Register (Table II). A list of CFR titles, chapters, and parts and an alphabetical list of agencies publishing in the CFR are also included in this volume.

An index to the text of ''Title 3—The President'' is carried within that volume.

The Federal Register Index is issued monthly in cumulative form. This index is based on a consolidation of the ''Contents'' entries in the daily Federal Register.

A List of CFR Sections Affected (LSA) is published monthly, keyed to the revision dates of the 50 CFR titles.

REPUBLICATION OF MATERIAL

There are no restrictions on the republication of material appearing in the Code of Federal Regulations.

INQUIRIES

For a legal interpretation or explanation of any regulation in this volume, contact the issuing agency. The issuing agency's name appears at the top of odd–numbered pages.

For inquiries concerning CFR reference assistance, call 202–523–5227 or write to the Director, Office of the Federal Register, National Archives and Records Administration, Washington, DC 20408 or e–mail info@fedreg.nara.gov.

SALES

The Government Printing Office (GPO) processes all sales and distribution of the CFR. For payment by credit card, call 202–512–1800, M–F 8 a.m. to 4 p.m. e.s.t. or fax your order to 202–512–2233, 24 hours a day. For payment by check, write to the Superintendent of Documents, Attn: New Orders, P.O. Box 371954, Pittsburgh, PA 15250–7954. For GPO Customer Service call 202–512–1803.

ELECTRONIC SERVICES

The full text of the Code of Federal Regulations, The United States Government Manual, the Federal Register, Public Laws, Weekly Compilation of Presidential Documents and the Privacy Act Compilation are available in electronic format at www.access.gpo.gov/nara (''GPO Access''). For more information, contact Electronic Information Dissemination Services, U.S. Government Printing Office. Phone 202–512–1530, or 888–293–6498 (toll–free). E–mail, gpoaccess@gpo.gov.

The Office of the Federal Register also offers a free service on the National Archives and Records Administration's (NARA) World Wide Web site for public law numbers, Federal Register finding aids, and related information. Connect to NARA's web site at www.nara.gov/fedreg. The NARA site also contains links to GPO Access.

RAYMOND A. MOSLEY,
Director,
Office of the Federal Register.

April 1, 1998.

THIS TITLE

Title 26—INTERNAL REVENUE is composed of nineteen volumes. The contents of these volumes represent all current regulations issued by the Internal Revenue Service, Department of the Treasury, as of April 1, 1998. The first twelve volumes comprise part 1 (Subchapter A—Income Tax) and are arranged by sections as follows: §§ 1.0–1–1.60; §§ 1.61–1.169; §§ 1.170–1.300; §§ 1.301–1.400; §§ 1.401–1.440; §§ 1.441–1.500; §§ 1.501–1.640; §§ 1.641–1.850; §§ 1.851–1.907; §§ 1.908–1.1000; §§ 1.1001–1.1400 and § 1.1401 to end. The thirteenth volume containing parts 2–29, includes the remainder of subchapter A and all of Subchapter B—Estate and Gift Taxes. The last six volumes contain parts 30–39 (Subchapter C—Employment Taxes and Collection of Income Tax at Source); parts 40–49; parts 50–299 (Subchapter D—Miscellaneous Excise Taxes); parts 300–499 (Subchapter F—Procedure and Administration); parts 500–599 (Subchapter G—Regulations under Tax Conventions); and part 600 to end (Subchapter H—Internal Revenue Practice).

The OMB control numbers for Title 26 appear in § 602.101 of this chapter. For the convenience of the user, § 602.101 appears in the Finding Aids section of the volumes containing parts 1 to 599.

For this volume, Gregory R. Walton was Chief Editor. The Code of Federal Regulations publication program is under the direction of Frances D. McDonald, assisted by Alomha S. Morris.

Would you like to know. . .

if any changes have been made to the *Code of Federal Regulations* or what documents have been published in the *Federal Register* without reading the *Federal Register* every day? If so, you may wish to subscribe to the *LSA* (List of CFR Sections Affected), the *Federal Register Index,* or both.

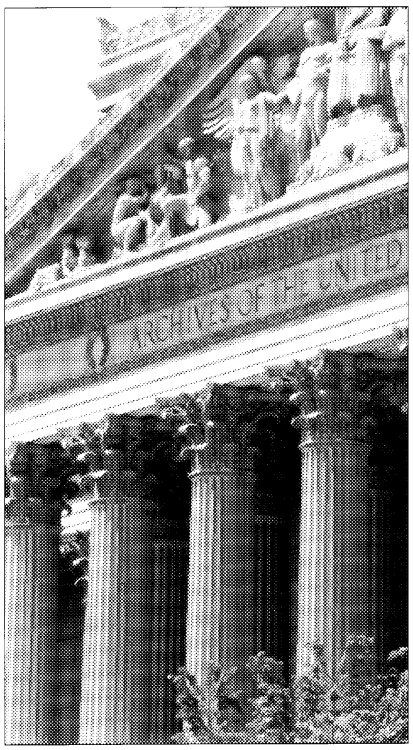

LSA

The *LSA* (List of CFR Sections Affected) is designed to lead users of the *Code of Federal Regulations* to amendatory actions published in the *Federal Register*. The *LSA* is issued monthly in cumulative form. Entries indicate the nature of the changes—such as revised, removed, or corrected.
$27 per year.

Federal Register Index

The index, covering the contents of the daily *Federal Register,* is issued monthly in cumulative form. Entries are carried primarily under the names of the issuing agencies. Significant subjects are carried as cross-references.
$25 per year.

A finding aid is included in each publication which lists *Federal Register* page numbers with the date of publication in the *Federal Register.*

Superintendent of Documents Subscription Order Form

Order Processing Code:
***5421**

❑ **YES,** send me the following indicated subscriptions for one year:

____ **LSA (List of CFR Sections Affected),** (LCS) for $27 per year.

____ **Federal Register Index** (FRSU) $25 per year.

The total cost of my order is $ _____
Price is subject to change. International customers please add 25%.

(Includes regular shipping and handling.)

For privacy check box below:

❑ Do not make my name available to other mailers

Check method of payment:

❑ Check payable to Superintendent of Documents

❑ GPO Deposit Account ☐☐☐☐☐☐☐ — ☐

❑ VISA ❑ MasterCard ☐☐☐☐ (expiration date)

Company or personal name

Street address

City, State, ZIP code

Daytime phone with area code

Purchase order No. (optional)

Credit card No. (must be 20 digits)

Thank you for your order!

Authorizing signature 1/97

Fax your orders (202) 512–2250
Phone your orders (202) 512–1800

Mail To: Superintendent of Documents
PO Box 371954
Pittsburgh PA 15250–7954

Title 26—Internal Revenue

(This book contains part 1, §§ 1.301 to 1.400)

Part

CHAPTER I—Internal Revenue Service, Department of the Treasury (Continued) 1

CHAPTER I—INTERNAL REVENUE SERVICE, DEPARTMENT OF THE TREASURY (Continued)

EDITORIAL NOTE: IRS published a document at 45 FR 6088, Jan. 25, 1980, deleting statutory sections from their regulations. In chapter I cross references to the deleted material have been changed to the corresponding sections of the IRS Code of 1954 or to the appropriate regulations sections. When either such change produced a redundancy, the cross reference has been deleted. For further explanation, see 45 FR 20795, March 31, 1980.

SUBCHAPTER A—INCOME TAX

Part		*Page*
1	Income taxes (Continued)	7

SUPPLEMENTARY PUBLICATION: *Internal Revenue Service Looseleaf Regulations System.*

Additional supplementary publications are issued covering *Alcohol and Tobacco Tax Regulations, and Regulations Under Tax Conventions.*

SUBCHAPTER A—INCOME TAX (Continued)

PART 1—INCOME TAXES (Continued)

Normal Taxes and Surtaxes (Continued)

CORPORATE DISTRIBUTIONS AND ADJUSTMENTS

DISTRIBUTIONS BY CORPORATIONS

EFFECTS ON RECIPIENTS

Sec.
1.301–1 Rules applicable with respect to distributions of money and other property.
1.302–1 General.
1.302–2 Redemptions not taxable as dividends.
1.302–3 Substantially disproportionate redemption.
1.302–4 Termination of shareholder's interest.
1.303–1 General.
1.303–2 Requirements.
1.303–3 Application of other sections.
1.304–1 General.
1.304–2 Acquisition by related corporation (other than subsidiary).
1.304–3 Acquisition by a subsidiary.
1.304–4T Special rule for use of a related corporation to acquire for property the stock of another commonly owned corporation (temporary).
1.304–5 Control.
1.305–1 Stock dividends.
1.305–2 Distributions in lieu of money.
1.305–3 Disproportionate distributions.
1.305–4 Distributions of common and preferred stock.
1.305–5 Distributions on preferred stock.
1.305–6 Distributions of convertible preferred.
1.305–7 Certain transactions treated as distributions.
1.305–8 Effective dates.
1.306–1 General
1.306–2 Exception
1.306–3 Section 306 stock defined.
1.307–1 General.
1.307–2 Exception.

EFFECTS ON CORPORATION

1.312–1 Adjustment to earnings and profits reflecting distributions by corporations.
1.312–2 Distribution of inventory assets.
1.312–3 Liabilities.
1.312–4 Examples of adjustments provided in section 312(c).
1.312–5 Special rule for partial liquidations and certain redemptions.
1.312–6 Earnings and profits.
1.312–7 Effect on earnings and profits of gain or loss realized after February 28, 1913.
1.312–8 Effect on earnings and profits of receipt of tax-free distributions requiring adjustment or allocation of basis of stock.
1.312–9 Adjustments to earnings and profits reflecting increase in value accrued before March 1, 1913.
1.312–10 Allocation of earnings in certain corporate separations.
1.312–11 Effect on earnings and profits of certain other tax-free exchanges, tax-free distributions, and tax-free transfers from one corporation to another.
1.312–12 Distributions of proceeds of loans guaranteed by the United States.
1.312–15 Effect of depreciation on earnings and profits.

DEFINITIONS; CONSTRUCTIVE OWNERSHIP OF STOCK

1.316–1 Dividends.
1.316–2 Sources of distribution in general.
1.317–1 Property defined.
1.318–1 Constructive ownership of stock; introduction.
1.318–2 Application of general rules.
1.318–3 Estates, trusts, and options.
1.318–4 Constructive ownership as actual ownership; exceptions.

CORPORATE LIQUIDATIONS

EFFECTS ON RECIPIENTS

1.331–1 Corporate liquidations.
1.332–1 Distributions in liquidation of subsidiary corporation; general.
1.332–2 Requirements for nonrecognition of gain or loss.
1.332–3 Liquidations completed within one taxable year.
1.332–4 Liquidations covering more than one taxable year.
1.332–5 Distributions in liquidation as affecting minority interests.
1.332–6 Records to be kept and information to be filed with return.
1.332–7 Indebtedness of subsidiary to parent.
1.334–1 Basis of property received in liquidations.

EFFECTS ON CORPORATION

1.337(d)–1 Transitional loss limitation rule.
1.337(d)–1T [Reserved]
1.337(d)–2 Loss limitation window period.
1.338–0 Outline of topics.
1.338–1 Elections under section 338.
1.338–2 Miscellaneous issues under section 338.
1.338–3 Deemed sale and aggregate deemed sale price.
1.338–4 Asset and stock consistency.
1.338–5 International aspects of section 338.
1.338(b)–1 Adjusted grossed-up basis.
1.338(b)–2T Allocation of adjusted grossed-up basis among target assets (temporary).
1.338(b)–3T Subsequent adjustments to adjusted grossed-up basis (temporary).
1.338(h)(10)–1 Deemed asset sale and liquidation.

1.338(i)–1 Effective dates.

COLLAPSIBLE CORPORATIONS; FOREIGN PERSONAL HOLDING COMPANIES

1.341–1 Collapsible corporations; in general.
1.341–2 Definitions.
1.341–3 Presumptions.
1.341–4 Limitations on application of section.
1.341–5 Application of section.
1.341–6 Exceptions to application of section.
1.341–7 Certain sales of stock of consenting corporations.
1.342–1 General.

DEFINITION

1.346–1 Partial liquidation.
1.346–2 Treatment of certain redemptions.
1.346–3 Effect of certain sales.

CORPORATE ORGANIZATIONS AND REORGANIZATIONS

CORPORATE ORGANIZATIONS

1.351–1 Transfer to corporation controlled by transferor.
1.351–2 Receipt of property.
1.351–3 Records to be kept and information to be filed.

EFFECTS ON SHAREHOLDERS AND SECURITY HOLDERS

1.354–1 Exchanges of stock and securities in certain reorganizations.
1.355–0 In order to facilitate the use of §§1.355–1 through 1.355–6, this section lists the paragraphs, subparagraphs, and subdivisions in those sections.
1.355–1 Distribution of stock and securities of controlled corporation.
1.355–2 Limitations.
1.355–3 Active conduct of a trade or business.
1.355–4 Non pro rata distributions, etc.
1.355–5 Records to be kept and information to be filed.
1.355–6 Certain distributions qualifying under section 355 made ineligible for norecognition of gain to the distributing corporation under §337(d). [Reserved]
1.356–1 Receipt of additional consideration in connection with an exchange.
1.356–2 Receipt of additional consideration not in connection with an exchange.
1.356–3 Rules for treatment of securities as ''other property''.
1.356–4 Exchanges for section 306 stock.
1.356–5 Transactions involving gift or compensation.
§1.356–6T Rules for treatment of nonqualified preferred stock as ''other property'' (temporary).
1.357–1 Assumption of liability.
1.357–2 Liabilities in excess of basis.
1.358–1 Basis to distributees.
1.358–2 Allocation of basis among nonrecognition property.
1.358–3 Treatment of assumption of liabilities.
1.358–4 Exceptions.
1.358–5 [Reserved]
1.358–6 Stock basis in certain triangular reorganizations.

EFFECTS ON CORPORATION

1.361–1 Nonrecognition of gain or loss to corporations.
1.362–1 Basis to corporations.
1.362–2 Certain contributions to capital.
1.367(a)–1T Transfers to foreign corporations subject to section 367(a): In general (temporary).
1.367(a)–2T Exception for transfers of property for use in the active conduct of a trade or business (temporary).
1.367(a)–3 Treatment of transfers of stock or securities to foreign corporations.
1.367(a)–3T Treatment of transfers of stock or securities for foreign corporations (temporary).
1.367(a)–4T Special rules applicable to specified transfers of property (temporary).
1.367(a)–5T Property subject to section 367(a)(1) regardless of use in trade or business (temporary).
1.367(a)–6T Transfer of foreign branch with previously deducted losses (temporary).
1.367(b)–2 Definitions.
1.367(b)–7 Exchange of stock described in section 354.
1.367(b)–8 Transfer of assets by a foreign corporation in an exchange described in section 351.
1.367(b)–9 Attribution of earnings and profits on an exchange described in section 351, 354, or 356.
1.367(d)–1T Transfers of intangible property to foreign corporations (temporary).
1.367(e)–0T Treatment of section 355 distributions by U.S. corporations to foreign persons; table of contents.
1.367(e)–1T Treatment of section 355 distributions by U.S. corporations to foreign persons (temporary).
1.367(e)–2T Distributions described in section 367(e)(2) (temporary).

SPECIAL RULE; DEFINITIONS

1.368–1 Purpose and scope of exception of reorganization exchanges.
1.368–1T Purpose and scope of exception of reorganization exchanges (temporary).
1.368–2 Definition of terms.
1.368–3 Records to be kept and information to be filed with returns.

INSOLVENCY REORGANIZATIONS

1.371–1 Exchanges by corporations.
1.371–2 Exchanges by security holders.
1.372–1 Corporations.
1.374–1 Exchanges by insolvent railroad corporations.

1.374–2 Basis of property acquired after December 31, 1938, by railroad corporation in a receivership or railroad reorganization proceeding.
1.374–3 Records to be kept and information to be filed.
1.374–4 Property acquired by electric railway corporation in corporate reorganization proceeding.

CARRYOVERS

1.381(a)–1 General rule relating to carryovers in certain corporate acquisitions.
1.381(b)–1 Operating rules applicable to carryovers in certain corporate acquisitions.
1.381(c)(1)–1 Net operating loss carryovers in certain corporate acquisitions.
1.381(c)(1)–2 Net operating loss carryovers; two or more dates of distribution or transfer in the taxable year.
1.381(c)(2)–1 Earnings and profits.
1.381(c)(3)–1 Capital loss carryovers.
1.381(c)(4)–1 Method of accounting.
1.381(c)(5)–1 Inventories.
1.381(c)(6)–1 Depreciation method.
1.381(c)(8)–1 Installment method.
1.381(c)(9)–1 Amortization of bond discount or premium.
1.381(c)(10)–1 Deferred exploration and development expenditures.
1.381(c)(11)–1 Contributions to pension plan, employees' annuity plans, and stock bonus and profit-sharing plans.
1.381(c)(12)–1 Recovery of bad debts, prior taxes, or delinquency amounts.
1.381(c)(13)–1 Involuntary conversions.
1.381(c)(14)–1 Dividend carryover to personal holding company.
1.381(c)(15)–1 Indebtedness of certain personal holding companies.
1.381(c)(16)–1 Obligations of distributor or transferor corporation.
1.381(c)(17)–1 Deficiency dividend of personal holding company.
1.381(c)(18)–1 Depletion on extraction of ores or minerals from the waste or residue of prior mining.
1.381(c)(19)–1 Charitable contribution carryovers in certain acquisitions.
1.381(c)(21)–1 Pre-1954 adjustments resulting from change in method of accounting.
1.381(c)(22)–1 Successor life insurance company.
1.381(c)(23)–1 Investment credit carryovers in certain corporate acquisitions.
1.381(c)(24)–1 Work incentive program credit carryovers in certain corporate acquisitions.
1.381(c)(25)–1 Deficiency dividend of a qualified investment entity.
1.381(c)(26)–1 Credit for employment of certain new employees.
1.381(d)–1 Operations loss carryovers of life insurance companies.
1.382–1 Table of contents.
1.382–1T [Reserved]
1.382–2 General rules for ownership change.
1.382–2T Definition of ownership change under section 382, as amended by the Tax Reform Act of 1986 (temporary).
1.382–3 Definitions and rules relating to a 5–percent shareholder.
1.382–4 Constructive ownership of stock.
1.382–5 Section 382 limitation. [Reserved]
1.382–5T Section 382 limitation (temporary).
1.382–6 Allocation of income and loss to periods before and after the change date for purposes of section 382.
1.382–7 Built-in gains and loses. [Reserved]
1.382–8 Controlled groups. [Reserved]
1.382–8T Controlled groups (temporary).
1.382–9 Special rules under section 382 for corporations under the jurisdiction of a court in a title 11 or similar case.
1.382–10 [Reserved]
1.382–11 Effective dates. [Reserved]
1.383–0 Effective date.
1.383–1 Special limitations on certain capital losses and excess credits.
1.383–2 Limitations on certain capital losses and excess credits in computing alternative minimum tax. [Reserved]

AUTHORITY: 26 U.S.C. 7805, unless otherwise noted.

Section 1.304–5 also issued under 26 U.S.C. 304.
Section 1.305–3 also issued under 26 U.S.C. 305.
Section 1.305–5 also issued under 26 U.S.C. 305.
Section 1.305–7 also issued under 26 U.S.C. 305.
Section 1.337(d)–1 also issued under 26 U.S.C. 337(d).
Section 1.337(d)–2 also issued under 26 U.S.C. 337(d).
Section 1.338–1 also issued under 26 U.S.C. 337(d), 338, and 1502.
Section 1.338–2 also issued under 26 U.S.C. 337(d), 338, and 1502.
Section 1.338–3 also issued under 26 U.S.C. 337(d), 338, and 1502.
Section 1.338–4 also issued under 26 U.S.C. 337(d), 338, and 1502.
Section 1.338–5 also issued under 26 U.S.C. 337(d), 338, and 1502.
Section 1.338(b)–1 also issued under 26 U.S.C. 337(d), 338, and 1502.
Section 1.338(b)–3T also issued under 26 U.S.C. 338.
Section 1.338(h)(10)–1 also issued under 26 U.S.C. 337(d), 338, and 1502.
Section 1.338(i)–1 also issued under 26 U.S.C. 337(d), 338, and 1502.
Section 1.351–1 also issued under 26 U.S.C. 351.
Section 1.367(b)–2 also issued under 26 U.S.C. 367(b).
Section 1.367(b)–7 also issued under 26 U.S.C. 367(b).
Section 1.367(b)–8 also issued under 26 U.S.C. 367(b).

Section 1.367(b)–9 also issued under 26 U.S.C. 367(b).
Section 1.367(e)–1T also issued under 26 U.S.C. 367(e)(1).
Section 1.382–2 also issued under 26 U.S.C. 382(k)(1), (l)(3), (m), and 26 U.S.C. 383.
Section 1.382–2T also issued under 26 U.S.C. 382(g)(4)(C), (i), (k)(1) and (6), (l)(3), (m), and 26 U.S.C. 383.
Section 1.382–3 also issued under 26 U.S.C. 382(m).
Section 1.382–4 also issued under 26 U.S.C. 382(l)(3) and 382(m).
Section 1.382–5T also issued under 26 U.S.C. 382(m).
Section 1.382–6 also issued under 26 U.S.C. 382(b)(3)(A), 26 U.S.C.(d)(1), 26 U.S.C. 382(m), and 26 U.S.C.383(d).
Section 1.382–8T also issued under 26 U.S.C. 382(m).
Section 1.382–9 also issued under 26 U.S.C. 382(l)(3) and (m).
Section 1.383–1 also issued under 26 U.S.C. 383.
Section 1.383–2 also issued under 26 U.S.C. 383.

SOURCE: T.D. 6500, 25 FR 11607, Nov. 26, 1960; 25 FR 14021, Dec. 31, 1960, unless otherwise noted.

CORPORATE DISTRIBUTIONS AND ADJUSTMENTS

DISTRIBUTIONS BY CORPORATIONS

EFFECTS ON RECIPIENTS

§ 1.301–1 Rules applicable with respect to distributions of money and other property.

(a) *General.* Section 301 provides the general rule for treatment of distributions on or after June 22, 1954, of property by a corporation to a shareholder with respect to its stock. The term *property* is defined in section 317(a). Such distributions, except as otherwise provided in this chapter, shall be treated as provided in section 301(c). Under section 301(c), distributions may be included in gross income, applied against and reduce the adjusted basis of the stock, treated as gain from the sale or exchange of property, or (in the case of certain distributions out of increase in value accrued before March 1, 1913) may be exempt from tax. The amount of the distributions to which section 301 applies is determined in accordance with the provisions of section 301(b). The basis of property received in a distribution to which section 301 applies is determined in accordance with the provisions of section 301(d). Accordingly, except as otherwise provided in this chapter, a distribution on or after June 22, 1954, of property by a corporation to a shareholder with respect to its stock shall be included in gross income to the extent the amount distributed is considered a dividend under section 316. For examples of distributions treated otherwise, see sections 116, 301(c)(2), 301(c)(3)(B), 301(e), 302(b), 303, and 305. See also part II (relating to distributions in partial or complete liquidation), part III (relating to corporate organizations and reorganizations), and part IV (relating to insolvency reorganizations), subchapter C, chapter 1 of the Code.

(b) *Time of inclusion in gross income and of determination of fair market value.* A distribution made by a corporation to its shareholders shall be included in the gross income of the distributees when the cash or other property is unqualifiedly made subject to their demands. However, if such distribution is a distribution other than in cash, the fair market value of the property shall be determined as of the date of distribution without regard to whether such date is the same as that on which the distribution is includible in gross income. For example, if a corporation distributes a taxable dividend in property (the adjusted basis of which exceeds its fair market value on December 31, 1955) on December 31, 1955, which is received by, or unqualifiedly made subject to the demand of, its shareholders on January 2, 1956, the amount to be included in the gross income of the shareholders will be the fair market value of such property on December 31, 1955, although such amount will not be includible in the gross income of the shareholders until January 2, 1956.

(c) *Application of section to shareholders.* Section 301 is not applicable to an amount paid by a corporation to a shareholder unless the amount is paid to the shareholder in his capacity as such.

(d) *Distributions to corporate shareholders.* (1) If the shareholder is a corporation, the amount of any distribution to be taken into account under section 301(c) shall be:

(i) The amount of money distributed,

(ii) An amount equal to the fair market value of any property distributed which consists of any obligations of the distributing corporation, stock of the distributing corporation treated as property under section 305(b), or rights to acquire such stock treated as property under section 305(b), plus

(iii) In the case of a distribution not described in subdivision (iv) of this subparagraph, an amount equal to (*a*) the fair market value of any other property distributed or, if lesser, (*b*) the adjusted basis of such other property in the hands of the distributing corporation (determined immediately before the distribution and increased for any gain recognized to the distributing corporation under section 311 (b), (c), or (d), or under section 341(f), 617(d), 1245(a), 1250(a), 1251(c), 1252(a), or 1254(a)), or

(iv) In the case of a distribution made after November 8, 1971, to a shareholder which is a foreign corporation, an amount equal to the fair market value of any other property distributed, but only if the distribution received by such shareholder is not effectively connected for the taxable year with the conduct of a trade or business in the United States by such shareholder.

(2) In the case of a distribution the amount of which is determined by reference to the adjusted basis described in subparagraph (1)(iii)(*b*) of this paragraph:

(i) That portion of the distribution which is a dividend under section 301(c)(1) may not exceed such adjusted basis, or

(ii) If the distribution is not out of earnings and profits, the amount of the reduction in basis of the shareholder's stock, and the amount of any gain resulting from such distribution, are to be determined by reference to such adjusted basis of the property which is distributed.

(3) Notwithstanding paragraph (d)(1)(iii), if a distribution of property described in such paragraph is made after December 31, 1962, by a foreign corporation to a shareholder which is a corporation, the amount of the distribution to be taken into account under section 301(c) shall be determined under section 301(b)(1)(C) and paragraph (n) of this section.

(e) *Adjusted basis.* In determining the adjusted basis of property distributed in the hands of the distributing corporation immediately before the distribution for purposes of section 301(b)(1)(B)(ii), (b)(1)(C)(i), and (d)(2)(B), the basis to be used shall be the basis for determining gain upon a sale or exchange.

(f) *Examples.* The application of this section (except paragraph (n)) may be illustrated by the following examples:

Example (1). On January 1, 1955, A, an individual owned all of the stock of Corporation M with an adjusted basis of $2,000. During 1955, A received distributions from Corporation M totaling $30,000, consisting of $10,000 in cash and listed securities having a basis in the hands of Corporation M and a fair market value on the date distributed of $20,000. Corporation M's taxable year is the calendar year. As of December 31, 1954, Corporation M had earnings and profits accumulated after February 28, 1913, in the amount of $26,000, and it had no earnings and profits and no deficit for 1955. Of the $30,000 received by A, $26,000 will be treated as an ordinary dividend; the remaining $4,000 will be applied against the adjusted basis of his stock; the $2,000 in excess of the adjusted basis of his stock will either be treated as gain from the sale or exchange of property (under section 301(c)(3)(A)) or, if out of increase in value accrued before March 1, 1913, will (under section 301(c)(3)(B)) be exempt from tax. If A subsequently sells his stock in Corporation M, the basis for determining gain or loss on the sale will be zero.

Example (2). The facts are the same as in Example 1 with the exceptions that the shareholder of Corporation M is Corporation W and that the securities which were distributed had an adjusted basis to Corporation M of $15,000. The distribution received by Corporation W totals $25,000 consisting of $10,000 in cash and securities with an adjusted basis of $15,000. The total $25,000 will be treated as a dividend to Corporation W since the earnings and profits of Corporation M ($26,000) are in excess of the amount of the distribution.

Example (3). Corporation X owns timber land which it acquired prior to March 1, 1913, at a cost of $50,000 with $5,000 allocated as the separate cost of the land. On March 1, 1913, this property had a fair market value of $150,000 of which $135,000 was attributable to the timber and $15,000 to the land. All of the timber was cut prior to 1955 and the full appreciation in the value thereof, $90,000 ($135,000 − $45,000), realized through depletion allowances based on March 1, 1913, value.

None of this surplus from realized appreciation had been distributed. In 1955, Corporation X sold the land for $20,000 thereby realizing a gain of $15,000. Of this gain, $10,000 is due to realized appreciation in value which accrued before March 1, 1913 ($15,000 − $5,000). Of the gain of $15,000, $5,000 is taxable. Therefore, at December 31, 1955, Corporation X had a surplus from realized appreciation in the amount of $100,000. It had no accumulated earnings and profits and no deficit at January 1, 1955. The net earnings for 1955 (including the $5,000 gain on the sale of the land) were $20,000. During 1955, Corporation X distributed $75,000 to its stockholders. Of this amount, $20,000 will be treated as a dividend. The remaining $55,000, which is a distribution of realized appreciation, will be applied against and reduce the adjusted basis of the shareholders' stock. If any part of the $55,000 is in excess of the adjusted basis of a shareholder's stock, such part will be exempt from tax.

(g) *Reduction for liabilities.* For the purpose of section 301(a), the amount of any distribution shall be reduced by—

(1) The amount of any liability of the corporation assumed by the shareholder in connection with the distribution, and

(2) The amount of any liability to which the property received by the shareholder is subject immediately before and immediately after the distribution.

Such reduction, however, shall not cause the amount of the distribution to be reduced below zero.

(h) *Basis.* The basis of property received in the distribution to which section 301 applies shall be—

(1) If the shareholder is not a corporation, the fair market value of such property;

(2) If the shareholder is a corporation—

(i) In the case of a distribution of the obligations of the distributing corporation or of the stock of such corporation or rights to acquire such stock (if such stock or rights are treated as property under section 305(b)), the fair market value of such obligations, stock, or rights;

(ii) In the case of the distribution of any other property, except as provided in subdivision (iii) (relating to certain distributions by a foreign corporation) or subdivision (iv) (relating to certain distributions to foreign corporate distributees) of this subparagraph, whichever of the following is the lesser—

(*a*) The fair market value of such property; or

(*b*) The adjusted basis (in the hands of the distributing corporation immediately before the distribution) of such property increased in the amount of gain to the distributing corporation which is recognized under section 311(b) (relating to distributions of LIFO inventory), section 311(c) (relating to distributions of property subject to liabilities in excess of basis), section 311(d) (relating to appreciated proterty used to redeem stock), section 341(f) (relating to certain sales of stock of consenting corporations), section 617(d) (relating to gain from dispositions of certain mining property), section 1245(a) or 1250(a) (relating to gain from dispositions of certain depreciable property), section 1251(c) (relating to gain from disposition of farm recapture property), section 1252(a) (relating to gain from disposition of farm land), or 1254(a) (relating to gain from disposition of interest in natural resource recapture property);

(iii) In the case of the distribution by a foreign corporation of any other property after December 31, 1962, in a distribution not described in subdivision (iv) of this subparagraph, the amount determined under paragraph (n) of this section;

(iv) In the case of the distribution of any other property made after November 8, 1971, to a shareholder which is a foreign corporation, the fair market value of such property, but only if the distribution received by such shareholder is not effectively connected for the taxable year with the conduct of a trade or business in the United States by such shareholder.

(i) [Reserved]

(j) *Transfers for less than fair market value.* If property is transferred by a corporation to a shareholder which is not a corporation for an amount less than its fair market value in a sale or exchange, such shareholder shall be treated as having received a distribution to which section 301 applies. In such case, the amount of the distribution shall be the difference between the amount paid for the property and its

fair market value. If property is transferred in a sale or exchange by a corporation to a shareholder which is a corporation, for an amount less than its fair market value and also less than its adjusted basis, such shareholder shall be treated as having received a distribution to which section 301 applies, and—

(1) Where the fair market value of the property equals or exceeds its adjusted basis in the hands of the distributing corporation the amount of the distribution shall be the excess of the adjusted basis (increased by the amount of gain recognized under section 311 (b), (c), or (d), or under section 341(f), 617(d), 1245(a), 1250(a), 1251(c), 1252(a), or 1254(a) to the distributing corporation) over the amount paid for the property;

(2) Where the fair market value of the property is less than its adjusted basis in the hands of the distributing corporation, the amount of the distribution shall be the excess of such fair market value over the amount paid for the property. If property is transferred in a sale or exchange after December 31, 1962, by a foreign corporation to a shareholder which is a corporation for an amount less than the amount which would have been computed under paragraph (n) of this section if such property had been received in a distribution to which section 301 applied, such shareholder shall be treated as having received a distribution to which section 301 applies, and the amount of the distribution shall be the excess of the amount which would have been computed under paragraph (n) of this section with respect to such property over the amount paid for the property. In all cases, the earnings and profits of the distributing corporation shall be decreased by the excess of the basis of the property in the hands of the distributing corporation over the amount received therefor. In computing gain or loss from the subsequent sale of such property, its basis shall be the amount paid for the property increased by the amount of the distribution.

If property is transferred in a sale or exchange after December 31, 1962, by a foreign corporation to a shareholder which is a corporation for an amount less than the amount which would have been computed under paragraph (n) of this section if such property had been received in a distribution to which section 301 applied, such shareholder shall be treated as having received a distribution to which section 301 applies, and the amount of the distribution shall be the excess of the amount which would have been computed under paragraph (n) of this section with respect to such property over the amount paid for the property. Notwithstanding the preceding provisions of this paragraph, if property is transferred in a sale or exchange after November 8, 1971, by a corporation to a shareholder which is a foreign corporation, for an amount less than its fair market value, and if paragraph (d)(1)(iv) of this section would apply if such property were received in a distribution to which section 301 applies, such shareholder shall be treated as having received a distribution to which section 301 applies and the amount of the distribution shall be the difference between the amount paid for the property and its fair market value. In all cases, the earnings and profits of the distributing corporation shall be decreased by the excess of the basis of the property in the hands of the distributing corporation over the amount received therefor. In computing gain or loss from the subsequent sale of such property, its basis shall be the amount paid for the property increased by the amount of the distribution.

(k) *Application of rule respecting transfers for less than fair market value.* The application of paragraph (j) of this section may be illustrated by the following examples:

Example (1). On January 1, 1955, A, an individual shareholder of corporation X, purchased property from that corporation for $20. The fair market value of such property was $100, and its basis in the hands of corporation X was $25. The amount of the distribution determined under section 301(b) is $80. If A were a corporation, the amount of the distribution would be $5 (assuming that sections 311 (b) and (c), 1245(a), and 1250(a) do not apply), the excess of the basis of the property in the hands of corporation X over the amount received therefor. The basis of such property to corporation A would be $25. If the basis of the property in the hands of corporation X were $10, the corporate shareholder, A, would not receive a distribution.

The basis of such property to corporation A would be $20. Whether or not A is a corporation, the excess of the amount paid over the basis of the property in the hands of corporation X ($20 over $10) would be a taxable gain to corporation X.

Example (2). On January 1, 1963, corporation A, which is a shareholder of corporation B (a foreign corporation engaged in business within the United States), purchased one share of corporation X stock from B for $20. The fair market value of the share was $100, and its adjusted basis in the hands of B was $25. Assume that if the share of corporation X stock had been received by A in a distribution to which section 301 applied, the amount of the distribution under paragraph (n) of this section would have been $55. The amount of the distribution under section 301 is $35, i.e., $55 (amount computed under paragraph (n) of this section) minus $20 (amount paid for the property). The basis of such property to A is $55.

(l) *Transactions treated as distributions.* A distribution to shareholders with respect to their stock is within the terms of section 301 although it takes place at the same time as another transaction if the distribution is in substance a separate transaction whether or not connected in a formal sense. This is most likely to occur in the case of a recapitalization, a reincorporation, or a merger of a corporation with a newly organized corporation having substantially no property. For example, if a corporation having only common stock outstanding, exchanges one share of newly issued common stock and one bond in the principal amount of $10 for each share of outstanding common stock, the distribution of the bonds will be a distribution of property (to the extent of their fair market value) to which section 301 applies, even though the exchange of common stock for common stock may be pursuant to a plan of reorganization under the terms of section 368(a)(1)(E) (recapitalization) and even though the exchange of common stock for common stock may be tax free by virtue of section 354.

(m) *Cancellation of indebtedness.* The cancellation of indebtedness of a shareholder by a corporation shall be treated as a distribution of property.

(n) [Reserved]

(o) *Distributions of certain property by DISC's to corporate shareholders.* See § 1.997–1 for the rule that if a corporation which is a DISC or former DISC (as defined in section 992(a)(1) or (3) as the case may be) makes a distribution of property (other than money and other than the obligations of the DISC or former DISC) out of accumulated DISC income (as defined in section 996(f)(1)) or previously taxed income (as defined in section 996(f)(2)), such distribution of property shall be treated as if it were made to an individual and that the basis of the property distributed, in the hands of the recipient corporation, shall be determined as if such property were distributed to an individual.

(p) *Cross references.* For certain rules relating to adjustments to earnings and profits and for determining the extent to which a distribution is a dividend, see sections 312 and 316 and regulations thereunder.

[T.D. 6500, 25 FR 11607, Nov. 26, 1960, as amended by T.D. 6752, 29 FR 12701, Sept. 9, 1964; T.D. 7084, 36 FR 267, Jan. 8, 1971; T.D. 7209, 37 FR 20800, Oct. 5, 1972; 38 FR 20824, Aug. 3, 1973; 38 FR 32794, Nov. 28, 1973; T.D. 7556, 44 FR 1376, Jan. 5, 1979; T.D. 8474, 58 FR 25557, Apr. 27, 1993; T.D. 8586, 60 FR 2500, Jan. 10, 1995]

§ 1.302–1 General.

(a) Under section 302(d), unless otherwise provided in subchapter C, chapter 1 of the Code, a distribution in redemption of stock shall be treated as a distribution of property to which section 301 applies if the distribution is not within any of the provisions of section 302(b). A distribution in redemption of stock shall be considered a distribution in part or full payment in exchange for the stock under section 302(a) provided paragraph (1), (2), (3), or (4) of section 302(b) applies. Section 318(a) (relating to constructive ownership of stock) applies to all redemptions under section 302 except that in the termination of a shareholder's interest certain limitations are placed on the application of section 318(a)(1) by section 302(c)(2). The term *redemption of stock* is defined in section 317(b). Section 302 does not apply to that portion of any distribution which qualifies as a distribution in partial liquidation under section 346. For special rules relating to redemption of stock to pay death taxes see section 303. For special rules relating to redemption of section 306 stock see

section 306. For special rules relating to redemption of stock in partial or complete liquidation see section 331.

(b) If, in connection with a partial liquidation under the terms of section 346, stock is redeemed in an amount in excess of the amount specified by section 331(a)(2), section 302(b) shall first apply as to each shareholder to which it is applicable without limitation because of section 331(a)(2). That portion of the total distribution which is used in all redemptions from specific shareholders which are within the terms of section 302(a) shall be excluded in determining the application of sections 346 and 331(a)(2). For example, Corporation X has $50,000 which is attributable to the sale of one of two active businesses and which, if distributed in redemption of stock, would qualify as a partial liquidation under the terms of section 346(b). Corporation X distributes $60,000 to its shareholders in redemption of stock, $20,000 of which is in redemption of all of the stock of shareholder A within the meaning of section 302(b)(3). The $20,000 distributed in redemption of the stock of shareholder A will be excluded in determining the application of sections 346 and 331(a)(2). The entire $60,000 will be treated as in part or full payment for stock ($20,000 qualifying under section 302(a) and $40,000 qualifying under sections 346 and 331(a)(2)).

§ 1.302–2 Redemptions not taxable as dividends.

(a) The fact that a redemption fails to meet the requirements of paragraph (2), (3) or (4) of section 302(b) shall not be taken into account in determining whether the redemption is not essentially equivalent to a dividend under section 302(b)(1). See, however, paragraph (b) of this section. For example, if a shareholder owns only nonvoting stock of a corporation which is not section 306 stock and which is limited and preferred as to dividends and in liquidation, and one-half of such stock is redeemed, the distribution will ordinarily meet the requirements of paragraph (1) of section 302(b) but will not meet the requirements of paragraph (2), (3) or (4) of such section. The determination of whether or not a distribution is within the phrase ''essentially equivalent to a dividend'' (that is, having the same effect as a distribution without any redemption of stock) shall be made without regard to the earnings and profits of the corporation at the time of the distribution. For example, if A owns all the stock of a corporation and the corporation redeems part of his stock at a time when it has no earnings and profits, the distribution shall be treated as a distribution under section 301 pursuant to section 302(d).

(b) The question whether a distribution in redemption of stock of a shareholder is not essentially equivalent to a dividend under section 302(b)(1) depends upon the facts and circumstances of each case. One of the facts to be considered in making this determination is the constructive stock ownership of such shareholder under section 318(a). All distributions in pro rata redemptions of a part of the stock of a corporation generally will be treated as distributions under section 301 if the corporation has only one class of stock outstanding. However, for distributions in partial liquidation, see section 346. The redemption of all of one class of stock (except section 306 stock) either at one time or in a series of redemptions generally will be considered as a distribution under section 301 if all classes of stock outstanding at the time of the redemption are held in the same proportion. Distribution in redemption of stock may be treated as distributions under section 301 regardless of the provisions of the stock certificate and regardless of whether all stock being redeemed was acquired by the stockholders from whom the stock was redeemed by purchase or otherwise. In every case in which a shareholder transfers stock to the corporation which issued such stock in exchange for property, the facts and circumstances shall be reported on his return except as provided in paragraph (d) of § 1.331–1. See sections 346(a) and 6043 for requirements relating to returns by corporations.

(c) In any case in which an amount received in redemption of stock is treated as a distribution of a dividend, proper adjustment of the basis of the remaining stock will be made with respect to the stock redeemed. (For adjustments to basis required for certain

redemptions of corporate shareholders that are treated as extraordinary dividends, see section 1059 and the regulations thereunder.) The following examples illustrate the application of this rule:

Example (1). A, an individual, purchased all of the stock of Corporation X for $100,000. In 1955 the corporation redeems half of the stock for $150,000, and it is determined that this amount constitutes a dividend. The remaining stock of Corporation X held by A has a basis of $100,000.

Example (2). H and W, husband and wife, each own half of the stock of Corporation X. All of the stock was purchased by H for $100,000 cash. In 1950 H gave one-half of the stock to W, the stock transferred having a value in excess of $50,000. In 1955 all of the stock of H is redeemed for $150,000, and it is determined that the distribution to H in redemption of his shares constitutes the distribution of a dividend. Immediately after the transaction, W holds the remaining stock of Corporation X with a basis of $100,000.

Example (3). The facts are the same as in *Example (2)* with the additional facts that the outstanding stock of Corporation X consists of 1,000 shares and all but 10 shares of the stock of H is redeemed. Immediately after the transaction, H holds 10 shares of the stock of Corporation X with a basis of $50,000, and W holds 500 shares with a basis of $50,000.

[T.D. 6500, 25 FR 11607, Nov. 26, 1960, as amended by T.D. 8724, 62 FR 38028, July 26, 1997]

§ 1.302–3 Substantially disproportionate redemption.

(a) Section 302(b)(2) provides for the treatment of an amount received in redemption of stock as an amount received in exchange for such stock if—

(1) Immediately after the redemption the shareholder owns less than 50 percent of the total combined voting power of all classes of stock as provided in section 302(b)(2)(B),

(2) The redemption is a substantially disproportionate redemption within the meaning of section 302(b)(2)(C), and

(3) The redemption is not pursuant to a plan described in section 302(b)(2)(D).

Section 318(a) (relating to constructive ownership of stock) shall apply both in making the disproportionate redemption test and in determining the percentage of stock ownership after the redemption. The requirements under section 302(b)(2) shall be applied to each shareholder separately and shall be applied only with respect to stock which is issued and outstanding in the hands of the shareholders. Section 302(b)(2) only applies to a redemption of voting stock or to a redemption of both voting stock and other stock. Section 302(b)(2) does not apply to the redemption solely of nonvoting stock (common or preferred). However, if a redemption is treated as an exchange to a particular shareholder under the terms of section 302(b)(2), such section will apply to the simultaneous redemption of nonvoting preferred stock (which is not section 306 stock) owned by such shareholder and such redemption will also be treated as an exchange. Generally, for purposes of this section, stock which does not have voting rights until the happening of an event, such as a default in the payment of dividends on preferred stock, is not voting stock until the happening of the specified event. Subsection 302(b)(2)(D) provides that a redemption will not be treated as substantially disproportionate if made pursuant to a plan the purpose or effect of which is a series of redemptions which result in the aggregate in a distribution which is not substantially disproportionate. Whether or not such a plan exists will be determined from all the facts and circumstances.

(b) The application of paragraph (a) of this section is illustrated by the following example:

Example. Corporation M has outstanding 400 shares of common stock of which A, B, C and D each own 100 shares or 25 percent. No stock is considered constructively owned by A, B, C or D under section 318. Corporation M redeems 55 shares from A, 25 shares from B, and 20 shares from C. For the redemption to be disproportionate as to any shareholder, such shareholder must own after the redemptions less than 20 percent (80 percent of 25 percent) of the 300 shares of stock then outstanding. After the redemptions, A owns 45 shares (15 percent), B owns 75 shares (25 percent), and C owns 80 shares (26 2/3 percent). The distribution is disproportionate only with respect to A.

§ 1.302–4 Termination of shareholder's interest.

Section 302(b)(3) provides that a distribution in redemption of all of the stock of the corporation owned by a

shareholder shall be treated as a distribution in part or full payment in exchange for the stock of such shareholder. In determining whether all of the stock of the shareholder has been redeemed, the general rule of section 302(c)(1) requires that the rules of constructive ownership provided in section 318(a) shall apply. Section 302(c)(2), however, provides that section 318(a)(1) (relating to constructive ownership of stock owned by members of a family) shall not apply where the specific requirements of section 302(c)(2) are met. The following rules shall be applicable in determining whether the specific requirements of section 302(c)(2) are met:

(a)(1) The agreement specified in section 302(c)(2)(A)(iii) shall be in the form of a separate statement in duplicate signed by the distributee and attached to the first return filed by the distributee for the taxable year in which the distribution described in section 302(b)(3) occurs. The agreement shall recite that the distributee has not acquired, other than by bequest or inheritance, any interest in the corporation (as described in section 302(c)(2)(A)(i)) since the distribution and that the distributee agrees to notify the district director for the internal revenue district in which the distributee resides of any acquisition, other than by bequest or inheritance, of such an interest in the corporation within 30 days after the acquisition, if the acquisition occurs within 10 years from the date of the distribution.

(2) If the distributee fails to file the agreement specified in section 302(c)(2)(A)(iii) at the time provided in paragraph (a)(1) of this section, then the district director for the internal revenue district in which the distributee resided at the time of filing the first return for the taxable year in which the distribution occurred shall grant a reasonable extension of time for filing such agreement, provided (i) it is established to the satisfaction of the district director that there was reasonable cause for failure to file the agreement within the prescribed time and (ii) a request for such extension is filed within such time as the district director considers reasonable under the circumstances.

(b) The distributee who files an agreement under section 302(c)(2)(A)(iii) shall retain copies of income tax returns and any other records indicating fully the amount of tax which would have been payable had the redemption been treated as a distribution subject to section 301.

(c) If stock of a parent corporation is redeemed, section 302(c)(2)(A), relating to acquisition of an interest in the corporation within 10 years after termination shall be applied with reference to an interest both in the parent corporation and any subsidiary of such parent corporation. If stock of a parent corporation is sold to a subsidiary in a transaction described in section 304, section 302(c)(2)(A) shall be applicable to the acquisition of an interest in such subsidiary corporation or in the parent corporation. If stock of a subsidiary corporation is redeemed, section 302(c)(2)(A) shall be applied with reference to an interest both in such subsidiary corporation and its parent. Section 302(c)(2)(A) shall also be applied with respect to an interest in a corporation which is a successor corporation to the corporation the interest in which has been terminated.

(d) For the purpose of section 302(c)(2)(A)(i), a person will be considered to be a creditor only if the rights of such person with respect to the corporation are not greater or broader in scope than necessary for the enforcement of his claim. Such claim must not in any sense be proprietary and must not be subordinate to the claims of general creditors. An obligation in the form of a debt may thus constitute a proprietary interest. For example, if under the terms of the instrument the corporation may discharge the principal amount of its obligation to a person by payments, the amount or certainty of which are dependent upon the earnings of the corporation, such a person is not a creditor of the corporation. Furthermore, if under the terms of the instrument the rate of purported interest is dependent upon earnings, the holder of such instrument may not, in some cases, be a creditor.

(e) In the case of a distributee to whom section 302(b)(3) is applicable, who is a creditor after such transaction, the acquisition of the assets of

the corporation in the enforcement of the rights of such creditor shall not be considered an acquisition of an interest in the corporation for purposes of section 302(c)(2) unless stock of the corporation, its parent corporation, or, in the case of a redemption of stock of a parent corporation, of a subsidiary of such corporation is acquired.

(f) In determining whether an entire interest in the corporation has been terminated under section 302(b)(3), under all circumstances paragraphs (2), (3), (4), and (5) of section 318(a) (relating to constructive ownership of stock) shall be applicable.

(g) Section 302(c)(2)(B) provides that section 302(c)(2)(A) shall not apply—

(1) If any portion of the stock redeemed was acquired directly or indirectly within the 10-year period ending on the date of the distribution by the distributee from a person, the ownership of whose stock would (at the time of distribution) be attributable to the distributee under section 318(a), or

(2) If any person owns (at the time of the distribution) stock, the ownership of which is attributable to the distributee under section 318(a), such person acquired any stock in the corporation directly or indirectly from the distributee within the 10-year period ending on the date of the distribution, and such stock so acquired from the distributee is not redeemed in the same transaction,unless the acquisition (described in subparagraph (1) of this paragraph) or the disposition by the distributee (described in subparagraph (2) of this paragraph) did not have as one of its principal purposes the avoidance of Federal income tax. A transfer of stock by the transferor, within the 10-year period ending on the date of the distribution, to a person whose stock would be attributable to the transferor shall not be deemed to have as one of its principal purposes the avoidance of Federal income tax merely because the transferee is in a lower income tax bracket than the transferor.

(Sec. 302(c)(2)(A)(iii) (68A Stat. 87; 26 U.S.C. 302 (c)(2)(A)(iii)))

[T.D. 7535, 43 FR 10686, Mar. 15, 1978]

§ 1.303–1 General.

Section 303 provides that in certain cases a distribution in redemption of stock, the value of which is included in determining the value of the gross estate of a decedent, shall be treated as a distribution in full payment in exchange for the stock so redeemed.

§ 1.303–2 Requirements.

(a) Section 303 applies only where the distribution is with respect to stock of a corporation the value of whose stock in the gross estate of the decedent for Federal estate tax purposes is an amount in excess of (1) 35 percent of the value of the gross estate of such decedent, or (2) 50 percent of the taxable estate of such decedent. For the purposes of such 35 percent and 50 percent requirements, stock of two or more corporations shall be treated as the stock of a single corporation if more than 75 percent in value of the outstanding stock of each such corporation is included in determining the value of the decedent's gross estate. For the purpose of the 75 percent requirement, stock which, at the decedent's death, represents the surviving spouse's interest in community property shall be considered as having been included in determining the value of the decedent's gross estate.

(b) For the purpose of section 303(b)(2)(A)(i), the term *gross estate* means the gross estate as computed in accordance with section 2031 (or, in the case of the estate of a decedent nonresident not a citizen of the United States, in accordance with section 2103). For the purpose of section 303(b)(2)(A)(ii), the term *taxable estate* means the taxable estate as computed in accordance with section 2051 (or, in the case of the estate of a decedent nonresident not a citizen of the United States, in accordance with section 2106). In case the value of an estate is determined for Federal estate tax purposes under section 2032 (relating to alternate valuation), then, for purposes of section 303(b)(2), the value of the gross estate, the taxable estate, and the stock shall each be determined on the applicable date prescribed in section 2032.

(c)(1) In determining whether the estate of the decedent is comprised of

stock of a corporation of sufficient value to satisfy the percentage requirements of section 303(b)(2)(A) and section 303(b)(2)(B), the total value, in the aggregate, of all classes of stock of the corporation includible in determining the value of the gross estate is taken into account. A distribution under section 303(a) may be in redemption of the stock of the corporation includible in determining the value of the gross estate, without regard to the class of such stock.

(2) The above may be illustrated by the following example:

Example. The gross estate of the decedent has a value of $1,000,000, the taxable estate is $700,000, and the sum of the death taxes and funeral and administration expenses is $275,000. Included in determining the gross estate of the decedent is stock of three corporations which, for Federal estate tax purposes, is valued as follows:

Corporation A:	
Common stock	$100,000
Preferred stock	100,000
Corporation B:	
Common stock	50,000
Preferred stock	350,000
Corporation C: Common stock	200,000

The stock of Corporation A and Corporation C included in the estate of the decedent constitutes all of the outstanding stock of both corporations. The stock of Corporation A and the stock of Corporation C, treated as the stock of a single corporation under section 303(b)(2)(B), has a value in excess of $350,000 (35 percent of the gross estate or 50 percent of the taxable estate). Likewise, the stock of Corporation B has a value in excess of $350,000. The distribution by one or more of the above corporations, within the period prescribed in section 303(b)(1), of amounts not exceeding, in the aggregate, $275,000, in redemption of preferred stock or common stock of such corporation or corporations, will be treated as in full payment in exchange for the stock so redeemed.

(d) If stock includible in determining the value of the gross estate of a decedent is exchanged for new stock, the basis of which is determined by reference to the basis of the old stock, the redemption of the new stock will be treated the same under section 303 as the redemption of the old stock would have been. Thus section 303 shall apply with respect to a distribution in redemption of stock received by the estate of a decedent (1) in connection with a reorganization under section 368, (2) in a distribution or exchange under section 355 (or so much of section 356 as relates to section 355), (3) in an exchange under section 1036 or (4) in a distribution to which section 305(a) applies. Similarly, a distribution in redemption of stock will qualify under section 303, notwithstanding the fact that the stock redeemed is section 306 stock to the extent that the conditions of section 303 are met.

(e) Section 303 applies to distributions made after the death of the decedent and (1) before the expiration of the 3-year period of limitations for the assessment of estate tax provided in section 6501(a) (determined without the application of any provisions of law extending or suspending the running of such period of limitations), or within 90 days after the expiration of such period, or (2) if a petition for redetermination of a deficiency in such estate tax has been filed with the Tax Court within the time prescribed in section 6213, at any time before the expiration of 60 days after the decision of the Tax Court becomes final. The extension of the period of distribution provided in section 303(b)(1)(B) has reference solely to bona fide contests in the Tax Court and will not apply in the case of a petition for redetermination of a deficiency which is initiated solely for the purpose of extending the period within which section 303 would otherwise be applicable.

(f) While section 303 will most frequently have application in the case where stock is redeemed from the executor or administrator of an estate, the section is also applicable to distributions in redemption of stock included in the decedent's gross estate and held at the time of the redemption by any person who acquired the stock by any of the means comprehended by part III, subchapter A, chapter 11 of the Code, including the heir, legatee, or donee of the decedent, a surviving joint tenant, surviving spouse, appointee, or taker in default of appointment, or a trustee of a trust created by the decedent. Thus section 303 may apply with respect to a distribution in redemption of stock from a donee to whom the decedent has transferred stock in contemplation of death where the value of such stock is included in the decedent's

gross estate under section 2035. Similarly, section 303 may apply to the redemption of stock from a beneficiary of the estate to whom an executor has distributed the stock pursuant to the terms of the will of the decedent. However, section 303 is not applicable to the case where stock is redeemed from a stockholder who has acquired the stock by gift or purchase from any person to whom such stock has passed from the decedent. Nor is section 303 applicable to the case where stock is redeemed from a stockholder who has acquired the stock from the executor in satisfaction of a specific monetary bequest.

(g)(1) The total amount of the distributions to which section 303 may apply with respect to redemptions of stock included in the gross estate of a decedent may not exceed the sum of the estate, inheritance, legacy, and succession taxes (including any interest collected as a part of such taxes) imposed because of the decedent's death and the amount of funeral and administration expenses allowable as deductions to the estate. Where there is more than one distribution in redemption of stock described in section 303(b)(2) during the period of time prescribed in section 303(b)(1), the distributions shall be applied against the total amount which qualifies for treatment under section 303 in the order in which the distributions are made. For this purpose, all distributions in redemption of such stock shall be taken into account, including distributions which under another provision of the Code are treated as in part or full payment in exchange for the stock redeemed.

(2) Subparagraph (1) of this paragraph may be illustrated by the following example:

Example. (i) The gross estate of the decedent has a value of $800,000, the taxable estate is $500,000, and the sum of the death taxes and funeral and administrative expenses is $225,000. Included in determining the gross estate of the decedent is the stock of a corporation which for Federal estate tax purposes is valued at $450,000. During the first year of administration, one-third of such stock is distributed to a legatee and shortly thereafter this stock is redeemed by the corporation for $150,000. During the second year of administration, another one-third of such stock includible in the estate is redeemed for $150,000.

(ii) The first distribution of $150,000 is applied against the $225,000 amount that qualifies for treatment under section 303, regardless of whether the first distribution was treated as in payment in exchange for stock under section 302(a). Thus, only $75,000 of the second distribution may be treated as in full payment in exchange for stock under section 303. The tax treatment of the remaining $75,000 would be determined under other provisions of the Code.

(h) For the purpose of section 303, the estate tax or any other estate, inheritance, legacy, or succession tax shall be ascertained after the allowance of any credit, relief, discount, refund, remission or reduction of tax.

[T.D. 6500, 25 FR 11607, Nov. 26, 1960, as amended by T.D. 6724, 29 FR 5343, Apr. 21, 1964; T.D. 7346, 40 FR 10669, Mar. 7, 1975]

§ 1.303–3 Application of other sections.

(a) The sole effect of section 303 is to exempt from tax as a dividend a distribution to which such section is applicable when made in redemption of stock includible in a decedent's gross estate. Such section does not, however, in any other manner affect the principles set forth in sections 302 and 306. Thus, if stock of a corporation is owned equally by A, B, and the C Estate, and the corporation redeems one-half of the stock of each shareholder, the determination of whether the distributions to A and B are essentially equivalent to dividends shall be made without regard to the effect which section 303 may have upon the taxability of the distribution to the C Estate.

(b) See section 304 relative to redemption of stock through the use of related corporations.

§ 1.304–1 General.

(a) Except as provided in paragraph (b) of this section, section 304 is applicable where a shareholder sells stock of one corporation to a related corporation as defined in section 304. Sales to which section 304 is applicable shall be treated as redemptions subject to sections 302 and 303.

(b) In the case of—

(1) Any acquisition of stock described in section 304 which occurred before June 22, 1954, and

(2) Any acquisition of stock described in section 304 which occurred on or after June 22, 1954, and on or before December 31, 1958, pursuant to a contract entered into before June 22, 1954.

The extent to which the property received in return for such acquisition shall be treated as a dividend shall be determined as if the Internal Revenue Code of 1939 continued to apply in respect of such acquisition and as if the Internal Revenue Code of 1954 had not been enacted. See section 391. In cases to which this paragraph applies, the basis of the stock received by the acquiring corporation shall be determined as if the Internal Revenue Code of 1939 continued to apply in respect of such acquisition and as if the Internal Revenue Code of 1954 had not been enacted.

[T.D. 6533, 26 FR 401, Jan. 19, 1961]

§ 1.304–2 Acquisition by related corporation (other than subsidiary).

(a) If a corporation, in return for property, acquires stock of another corporation from one or more persons, and the person or persons from whom the stock was acquired were in control of both such corporations before the acquisition, then such property shall be treated as received in redemption of stock of the acquiring corporation. The stock received by the acquiring corporation shall be treated as a contribution to the capital of such corporation. See section 362(a) for determination of the basis of such stock. The transferor's basis for his stock in the acquiring corporation shall be increased by the basis of the stock surrendered by him. (But see below in this paragraph for subsequent reductions of basis in certain cases.) As to each person transferring stock, the amount received shall be treated as a distribution of property under section 302(d), unless as to such person such amount is to be treated as received in exchange for the stock under the terms of section 302(a) or section 303. In applying section 302(b), reference shall be had to the shareholder's ownership of stock in the issuing corporation and not to his ownership of stock in the acquiring corporation (except for purposes of applying section 318(a)). In determining control and applying section 302(b), section 318(a) (relating to the constructive ownership of stock) shall be applied without regard to the 50-percent limitation contained in section 318(a)(2)(C) and (3)(C). A series of redemptions referred to in section 302(b)(2)(D) shall include acquisitions by either of the corporations of stock of the other and stock redemptions by both corporations. If section 302(d) applies to the surrender of stock by a shareholder, his basis for his stock in the acquiring corporation after the transaction (increased as stated above in this paragraph) shall not be decreased except as provided in section 301. If section 302(d) does not apply, the property received shall be treated as received in a distribution in payment in exchange for stock of the acquiring corporation under section 302(a), which stock has a basis equal to the amount by which the shareholder's basis for his stock in the acquiring corporation was increased on account of the contribution to capital as provided for above in this paragraph. Accordingly, such amount shall be applied in reduction of the shareholder's basis for his stock in the acquiring corporation. Thus, the basis of each share of the shareholder's stock in the acquiring corporation will be the same as the basis of such share before the entire transaction. The holding period of the stock which is considered to have been redeemed shall be the same as the holding period of the stock actually surrendered.

(b) In any case in which two or more persons, in the aggregate, control two corporations, section 304(a)(1) will apply to sales by such persons of stock in either corporation to the other (whether or not made simultaneously) provided the sales by each of such persons are related to each other. The determination of whether the sales are related to each other shall be dependent upon the facts and circumstances surrounding all of the sales. For this purpose, the fact that the sales may occur during a period of one or more years (such as in the case of a series of sales by persons who together control each of such corporations immediately prior to the first of such sales and immediately subsequent to the last of

such sales) shall be disregarded, provided the other facts and circumstances indicate related transactions.

(c) The application of section 304(a)(1) may be illustrated by the following examples:

Example (1). Corporation X and corporation Y each have outstanding 200 shares of common stock. One-half of the stock of each corporation is owned by an individual, A, and one-half by another individual, B, who is unrelated to A. On or after August 31, 1964, A sells 30 shares of corporation X stock to corporation Y for $50,000, such stock having an adjusted basis of $10,000 to A. After the sale, A is considered as owning corporation X stock as follows: (i) 70 shares directly, and (ii) 15 shares constructively, since by virtue of his 50-percent ownership of Y he constructively owns 50 percent of the 30 shares owned directly by Y. Since A's percentage of ownership of X's voting stock after the sale (85 out of 200 shares, or 42.5%) is not less than 80 percent of his percentage of ownership of X's voting stock before the sale (100 out of 200 shares, or 50%), the transfer is not ''substantially disproportionate'' as to him as provided in section 302(b)(2). Under these facts, and assuming that section 302(b)(1) is not applicable, the entire $50,000 is treated as a dividend to A to the extent of the earnings and profits of corporation Y. The basis of the corporation X stock to corporation Y is $10,000, its adjusted basis to A. The amount of $10,000 is added to the basis of the stock of corporation Y in the hands of A.

Example (2). The facts are the same as in *Example (1)* except that A sells 80 shares of corporation X stock to corporation Y, and the sale occurs before August 31, 1964. After the sale, A is considered as owning corporation X stock as follows: (i) 20 shares directly, and (ii) 90 shares indirectly, since by virtue of his 50-percent ownership of Y he constructively owns 50 percent of the 80 shares owned directly by Y and 50 percent of the 100 shares attributed to Y because they are owned by Y's stockholder, B. Since after the sale A owns a total of more than 50 percent of the voting power of all of the outstanding stock of X (110 out of 200 shares, or 55%), the transfer is not ''substantially disproportionate'' as to him as provided in section 302(b)(2).

Example (3). Corporation X and corporation Y each have outstanding 100 shares of common stock. A, an individual, owns one-half the stock of corporation X, and C owns one-half the stock of corporation Y. A, B, and C are unrelated. A sells 30 shares of the stock of corporation X to corporation Y for $50,000, such stock having an adjusted basis of $10,000 to him. After the sale, A is considered as owning 35 shares of the stock of corporation X (20 shares directly and 15 constructively because one-half of the 30 shares owned by corporation Y are attributed to him). Since before the sale he owned 50 percent of the stock of corporation X and after the sale he owned directly and constructively only 35 percent of such stock, the redemption is substantially disproportionate as to him pursuant to the provisions of section 302(b)(2). He, therefore, realizes a gain of $40,000 ($50,000 minus $10,000). If the stock surrendered is a capital asset, such gain is long-term or short-term capital gain depending on the period of time that such stock was held. The basis to A for the stock of corporation Y is not changed as a result of the entire transaction. The basis to corporation Y for the stock of corporation X is $50,000, i.e., the basis of the transferor ($10,000), increased in the amount of gain recognized to the transferor ($40,000) on the transfer.

Example (4). Corporation X and corporation Y each have outstanding 100 shares of common stock. H, an individual, W, his wife, S, his son, and G, his grandson, each own 25 shares of stock of each corporation. H sells all of his 25 shares of stock of corporation X to corporation Y. Since both before and after the transaction H owned directly and constructively 100 percent of the stock of corporation X, and assuming that section 302(b)(1) is not applicable, the amount received by him for his stock of corporation X is treated as a dividend to him to the extent of the earnings and profits of corporation Y.

[T.D. 6500, 25 FR 11607, Nov. 26, 1960, as amended by T.D. 6969, 33 FR 11997, Aug. 23, 1968]

§ 1.304–3 Acquisition by a subsidiary.

(a) If a subsidiary acquires stock of its parent corporation from a shareholder of the parent corporation, the acquisition of such stock shall be treated as though the parent corporation had redeemed its own stock. For the purpose of this section, a corporation is a parent corporation if it meets the 50 percent ownership requirements of section 304(c). The determination whether the amount received shall be treated as an amount received in payment in exchange for the stock shall be made by applying section 303, or by applying section 302(b) with reference to the stock of the issuing parent corporation. If such distribution would have been treated as a distribution of property (pursuant to section 302(d)) under section 301, the entire amount of the selling price of the stock shall be treated as a dividend to the seller to the extent of the earnings and profits of the parent corporation determined as if the

distribution had been made to it of the property that the subsidiary exchanged for the stock. In such cases, the transferor's basis for his remaining stock in the parent corporation will be determined by including the amount of the basis of the stock of the parent corporation sold to the subsidiary.

(b) Section 304(a)(2) may be illustrated by the following example:

Example. Corporation M has outstanding 100 shares of common stock which are owned as follows: B, 75 shares, C, son of B, 20 shares, and D, daughter of B, 5 shares. Corporation M owns the stock of Corporation X. B sells his 75 shares of Corporation M stock to Corporation X. Under section 302(b)(3) this is a termination of B's entire interest in Corporation M and the full amount received from the sale of his stock will be treated as payment in exchange for this stock, provided he fulfills the requirements of section 302(c)(2) (relating to an acquisition of an interest in the corporations).

§ 1.304–4T Special rule for use of a related corporation to acquire for property the stock of another commonly owned corporation (temporary).

(a) *In general.* At the discretion of the District Director, for purposes of determining the amount constituting a dividend, and source thereof, under section 304(b)(2), a corporation (deemed acquiring corporation) will be considered to have acquired for property the stock of a corporation (issuing corporation) acquired for property by another corporation (acquiring corporation) that is controlled by the deemed acquiring corporation, if one of the principal purposes for creating, organizing, or funding the acquiring corporation, through capital contributions or debt, is to avoid the application of section 304 to the deemed acquiring corporation. The following example illustrates the application of this paragraph (a).

Example. P, a domestic corporation, owns all of the stock of CFC1, a controlled foreign corporation with substantial accumulated earnings and profits. CFC1 is organized in Country X, which imposes a high rate of tax on CFC1's income. P also owns all of the stock of CFC2, another controlled foreign corporation, which has accumulated earnings and profits of $200x. CFC2 is organized in Country Y which imposes a low rate of tax on CFC2's income. P wishes to own all of its foreign corporations in a direct chain and to effectuate a repatriation of CFC2's cash to P. In order to avoid having to obtain Country X approval for the acquisition of CFC1 (a Country X corporation) by CFC2 (a Country Y corporation) and to avoid a dividend to P out of CFC2's earnings and profits that would otherwise occur as a result of the application of section 304, P causes CFC2 to form RFC as a Country X wholly-owned subsidiary and to contribute $100x to RFC. RFC will purchase, for $100x, all of the stock of CFC1 from P. Because one of P's principal purposes for having CFC1 owned by RFC is to avoid section 304, under § 1.304–4T(a), CFC2 is considered to have acquired the stock of CFC1 for $100x for purposes of determining the amount constituting a dividend (and source thereof) for purposes of section 304(b)(2).

(b) *Availability to taxpayers.* Nothing in this regulation shall be construed to provide a taxpayer the right to compel the Internal Revenue Service to disregard the form of its transaction for Federal income tax purposes.

(c) *Effective date.* This section is effective June 14, 1988, with respect to acquisitions of stock occurring on or after June 14, 1988.

[T.D. 8209, 53 FR 22171, June 14, 1988]

§ 1.304–5 Control.

(a) *Control requirement in general.* Section 304(c)(1) provides that, for purposes of section 304, control means the ownership of stock possessing at least 50 percent of the total combined voting power of all classes of stock entitled to vote or at least 50 percent of the total value of shares of all classes of stock. Section 304(c)(3) makes section 318(a) (relating to constructive ownership of stock), as modified by section 304(c)(3)(B), applicable to section 304 for purposes of determining control under section 304(c)(1).

(b) *Effect of section 304(c)(2)(B)*—(1) *In general.* In determining whether the control test with respect to both the issuing and acquiring corporations is satisfied, section 304(a)(1) considers only the person or persons that—

(i) Control the issuing corporation before the transaction;

(ii) Transfer issuing corporation stock to the acquiring corporation for property; and

(iii) Control the acquiring corporation thereafter.

(2) *Application.* Section 317 defines property to include money, securities,

and any other property except stock (or stock rights) in the distributing corporation. However, section 304(c)(2)(B) provides a special rule to extend the relevant group of persons to be tested for control of both the issuing and acquiring corporations to include the person or persons that do not acquire property, but rather solely stock from the acquiring corporation in the transaction. Section 304(c)(2)(B) provides that if two or more persons in control of the issuing corporation transfer stock of such corporation to the acquiring corporation, and if the transferors are in control of the acquiring corporation after the transfer, the person or persons in control of each corporation include each of those transferors. Because the purpose of section 304(c)(2)(B) is to include in the relevant control group the person or persons that retain or acquire acquiring corporation stock in the transaction, only the person or persons transferring stock of the issuing corporation that retain or acquire any proprietary interest in the acquiring corporation are taken into account for purposes of applying section 304(c)(2)(B).

(3) *Example.* This section may be illustrated by the following example.

Example (a) A, the owner of 20% of T's only class of stock, transfers that stock to P solely in exchange for all of the P stock. Pursuant to the same transaction, P, solely in exchange for cash, acquires the remaining 80% of the T stock from T's other shareholder, B, who is unrelated to A and P.

(b) Although A and B together were in control of T (the issuing corporation) before the transaction and A and B each transferred T stock to P (the acquiring corporation), sections 304(a)(1) and (c)(2)(B) do not apply to B because B did not retain or acquire any proprietary interest in P in the transaction. Section 304(a)(1) also does not apply to A because A (or any control group of which A was a member) did not control T before the transaction and P after the transaction.

(c) *Effective date.* This section is effective on January 20, 1994.

[T.D. 8515, 59 FR 2960, Jan. 20, 1994]

§ 1.305–1 Stock dividends.

(a) *In general.* Under section 305, a distribution made by a corporation to its shareholders in its stock or in rights to acquire its stock is not included in gross income except as provided in section 305(b) and the regulations promulgated under the authority of section 305(c). A distribution made by a corporation to its shareholders in its stock or rights to acquire its stock which would not otherwise be included in gross income by reason of section 305 shall not be so included merely because such distribution was made out of Treasury stock or consisted of rights to acquire Treasury stock. See section 307 for rules as to basis of stock and stock rights acquired in a distribution.

(b) *Amount of distribution.* (1) In general, where a distribution of stock or rights to acquire stock of a corporation is treated as a distribution of property to which section 301 applies by reason of section 305(b), the amount of the distribution, in accordance with section 301(b) and § 1.301–1, is the fair market value of such stock or rights on the date of distribution. See *Example (1)* of § 1.305–2(b).

(2) Where a corporation which regularly distributes its earnings and profits, such as a regulated investment company, declares a dividend pursuant to which the shareholders may elect to receive either money or stock of the distributing corporation of equivalent value, the amount of the distribution of the stock received by any shareholder electing to receive stock will be considered to equal the amount of the money which could have been received instead. See *Example (2)* of § 1.305–2(b).

(3) For rules for determining the amount of the distribution where certain transactions, such as changes in conversion ratios or periodic redemptions, are treated as distributions under section 305(c), see *Examples (6), (8), (9), and (15)* of § 1.305–3(e).

(c) *Adjustment in purchase price.* A transfer of stock (or rights to acquire stock) or an increase or decrease in the conversion ratio or redemption price of stock which represents an adjustment of the price to be paid by the distributing corporation in acquiring property (within the meaning of section 317(a)) is not within the purview of section 305 because it is not a distribution with respect to its stock. For example, assume that on January 1, 1970, pursuant to a reorganization, corporation X acquires all the stock of corporation Y solely in exchange for its convertible preferred

class B stock. Under the terms of the class B stock, its conversion ratio is to be adjusted in 1976 under a formula based upon the earnings of corporation Y over the 6-year period ending on December 31, 1975. Such an adjustment in 1976 is not covered by section 305.

(d) *Definitions.* (1) For purposes of this section and §§ 1.305–2 through 1.305–7, the term *stock* includes rights or warrants to acquire such stock.

(2) For purposes of §§ 1.305–2 through 1.305–7, the term *shareholder* includes a holder of rights or warrants or a holder of convertible securities.

[T.D. 7281, 38 FR 18532, July 12, 1973; 38 FR 19910, July 25, 1973]

§ 1.305–2 Distributions in lieu of money.

(a) *In general.* Under section 305(b)(1), if any shareholder has the right to an election or option with respect to whether a distribution shall be made either in money or any other property, or in stock or rights to acquire stock of the distributing corporation, then, with respect to all shareholders, the distribution of stock or rights to acquire stock is treated as a distribution of property to which section 301 applies regardless of—

(1) Whether the distribution is actually made in whole or in part in stock or in stock rights;

(2) Whether the election or option is exercised or exercisable before or after the declaration of the distribution;

(3) Whether the declaration of the distribution provides that the distribution will be made in one medium unless the shareholder specifically requests payment in the other;

(4) Whether the election governing the nature of the distribution is provided in the declaration of the distribution or in the corporate charter or arises from the circumstances of the distribution; or

(5) Whether all or part of the shareholders have the election.

(b) *Examples.* The application of section 305(b)(1) may be illustrated by the following examples:

Example (1). (i) Corporation X declared a dividend payable in additional shares of its common stock to the holders of its outstanding common stock on the basis of two additional shares for each share held on the record date but with the provision that, at the election of any shareholder made within a specified period prior to the distribution date, he may receive one additional share for each share held on the record date plus $12 principal amount of securities of corporation Y owned by corporation X. The fair market value of the stock of corporation X on the distribution date was $10 per share. The fair market value of $12 principal amount of securities of corporation Y on the distribution date was $11 but such securities had a cost basis to corporation X of $9.

(ii) The distribution to all shareholders of one additional share of stock of corporation X (with respect to which no election applies) for each share outstanding is not a distribution to which section 301 applies.

(iii) The distribution of the second share of stock of corporation X to those shareholders who do not elect to receive securities of corporation Y is a distribution of property to which section 301 applies, whether such shareholders are individuals or corporations. The amount of the distribution to which section 301 applies is $10 per share of stock of corporation X held on the record date (the fair market value of the stock of corporation X on the distribution date).

(iv) The distribution of securities of corporation Y in lieu of the second share of stock of corporation X to the shareholders of corporation X whether individuals or corporations, who elect to receive such securities, is also a distribution of property to which section 301 applies.

(v) In the case of the individual shareholders of corporation X who elects to receive such securities, the amount of the distribution to which section 301 applies is $11 per share of stock of corporation X held on the record date (the fair market value of the $12 principal amount of securities of corporation Y on the distribution date).

(vi) In the case of the corporate shareholders of corporation X electing to receive such securities, the amount of the distribution to which section 301 applies is $9 per share of stock of corporation X held on the record date (the basis of the securities of corporation Y in the hands of corporation X).

Example (2). On January 10, 1970, corporation X, a regulated investment company, declared a dividend of $1 per share on its common stock payable on February 11, 1970, in cash or in stock of corporation X of equivalent value determined as of January 22, 1970, at the election of the shareholder made on or before January 22, 1970. The amount of the distribution to which section 301 applies is $1 per share whether the shareholder elects to take cash or stock and whether the shareholder is an individual or a corporation.

Such amount will also be used in determining the dividend paid deduction of corporation X and the reduction in earnings and profits of corporation X.

[T.D. 7281, 38 FR 18532, July 12, 1973]

§ 1.305–3 Disproportionate distributions.

(a) *In general.* Under section 305(b)(2), a distribution (including a deemed distribution) by a corporation of its stock or rights to acquire its stock is treated as a distribution of property to which section 301 applies if the distribution (or a series of distributions of which such distribution is one) has the result of (1) the receipt of money or other property by some shareholders, and (2) an increase in the proportionate interests of other shareholders in the assets or earnings and profits of the corporation. Thus, if a corporation has two classes of common stock outstanding and cash dividends are paid on one class and stock dividends are paid on the other class, the stock dividends are treated as distributions to which section 301 applies.

(b) *Special rules.* (1) As used in section 305(b)(2), the term *a series of distributions* encompasses all distributions of stock made or deemed made by a corporation which have the result of the receipt of cash or property by some shareholders and an increase in the proportionate interests of other shareholders.

(2) In order for a distribution of stock to be considered as one of a series of distributions it is not necessary that such distribution be pursuant to a plan to distribute cash or property to some shareholders and to increase the proportionate interests of other shareholders. It is sufficient if there is an actual or deemed distribution of stock (of which such distribution is one) and as a result of such distribution or distributions some shareholders receive cash or property and other shareholders increase their proportionate interests. For example, if a corporation pays quarterly stock dividends to one class of common shareholders and annual cash dividends to another class of common shareholders the quarterly stock dividends constitute a series of distributions of stock having the result of the receipt of cash or property by some shareholders and an increase in the proportionate interests of other shareholders. This is so whether or not the stock distributions and the cash distributions are steps in an overall plan or are independent and unrelated. Accordingly, all the quarterly stock dividends are distributions to which section 301 applies.

(3) There is no requirement that both elements of section 305(b)(2) (i.e., receipt of cash or property by some shareholders and an increase in proportionate interests of other shareholders) occur in the form of a distribution or series of distributions as long as the result of a distribution or distributions of stock is that some shareholders' proportionate interests increase and other shareholders in fact receive cash or property. Thus, there is no requirement that the shareholders receiving cash or property acquire the cash or property by way of a corporate distribution with respect to their shares, so long as they receive such cash or property in their capacity as shareholders, if there is a stock distribution which results in a change in the proportionate interests of some shareholders and other shareholders receive cash or property. However, in order for a distribution of property to meet the requirement of section 305(b)(2), such distribution must be made to a shareholder in his capacity as a shareholder, and must be a distribution to which section 301, 356(a)(2), 871(a)(1)(A), 881(a)(1), 852(b), or 857(b) applies. (Under section 305(d)(2), the payment of interest to a holder of a convertible debenture is treated as a distribution of property to a shareholder for purposes of section 305(b)(2).) For example if a corporation makes a stock distribution to its shareholders and, pursuant to a prearranged plan with such corporation, a related corporation purchases such stock from those shareholders who want cash, in a transaction to which section 301 applies by virtue of section 304, the requirements of section 305(b)(2) are satisfied. In addition, a distribution of property incident to an isolated redemption of stock (for example, pursuant to a tender offer) will not cause section 305(b)(2) to apply even though the redemption distribution is treated as a distribution of property to

which section 301, 871(a)(1)(A), 881(a)(1), or 356(a)(2) applies.

(4) Where the receipt of cash or property occurs more than 36 months following a distribution or series of distributions of stock, or where a distribution or series of distributions of stock is made more than 36 months following the receipt of cash or property, such distribution or distributions will be presumed not to result in the receipt of cash or property by some shareholders and an increase in the proportionate interest of other shareholders, unless the receipt of cash or property and the distribution or series of distributions of stock are made pursuant to a plan. For example, if, pursuant to a plan, a corporation pays cash dividends to some shareholders on January 1, 1971 and increases the proportionate interests of other shareholders on March 1, 1974, such increases in proportionate interests are distributions to which section 301 applies.

(5) In determining whether a distribution or a series of distributions has the result of a disproportionate distribution, there shall be treated as outstanding stock of the distributing corporation (i) any right to acquire such stock (whether or not exercisable during the taxable year), and (ii) any security convertible into stock of the distributing corporation (whether or not convertible during the taxable year).

(6) In cases where there is more than one class of stock outstanding, each class of stock is to be considered separately in determining whether a shareholder has increased his proportionate interest in the assets or earnings and profits of a corporation. The individual shareholders of a class of stock will be deemed to have an increased interest if the class of stock as a whole has an increased interest in the corporation.

(c) *Distributions of cash in lieu of fractional shares.* (1) Section 305(b)(2) will not apply if—

(i) A corporation declares a dividend payable in stock of the corporation and distributes cash in lieu of fractional shares to which shareholders would otherwise be entitled, or

(ii) Upon a conversion of convertible stock or securities a corporation distributes cash in lieu of fractional shares to which shareholders would otherwise be entitled.

Provided the purpose of the distribution of cash is to save the corporation the trouble, expense, and inconvenience of issuing and transferring fractional shares (or scrip representing fractional shares), or issuing full shares representing the sum of fractional shares, and not to give any particular group of shareholders an increased interest in the assets or earnings and profits of the corporation. For purposes of paragraph (c)(1)(i) of this section, if the total amount of cash distributed in lieu of fractional shares is 5 percent or less of the total fair market value of the stock distributed (determined as of the date of declaration), the distribution shall be considered to be for such valid purpose.

(2) In a case to which subparagraph (1) of this paragraph applies, the transaction will be treated as though the fractional shares were distributed as part of the stock distribution and then were redeemed by the corporation. The treatment of the cash received by a shareholder will be determined under section 302.

(d) *Adjustment in conversion ratio.* (1)(i) Except as provided in subparagraph (2) of this paragraph, if a corporation has convertible stock or convertible securities outstanding (upon which it pays or is deemed to pay dividends or interest in money or other property) and distributes a stock dividend (or rights to acquire such stock) with respect to the stock into which the convertible stock or securities are convertible, an increase in proportionate interest in the assets or earnings and profits of the corporation by reason of such stock dividend shall be considered to have occurred unless a full adjustment in the conversion ratio or conversion price to reflect such stock dividend is made. Under certain circumstances, however, the application of an adjustment formula which in effect provides for a ''credit'' where stock is issued for consideration in excess of the conversion price may not satisfy the requirement for a ''full adjustment.'' Thus, if under a ''conversion price'' antidilution formula the formula provides for a ''credit'' where

stock is issued for consideration in excess of the conversion price (in effect as an offset against any decrease in the conversion price which would otherwise be required when stock is subsequently issued for consideration below the conversion price) there may still be an increase in proportionate interest by reason of a stock dividend after application of the formula, since any downward adjustment of the conversion price that would otherwise be required to reflect the stock dividend may be offset, in whole or in part, by the effect of prior sales made at prices above the conversion price. On the other hand, if there were no prior sales of stock above the conversion price then a full adjustment would occur upon the application of such an adjustment formula and there would be no change in proportionate interest. Similarly, if consideration is to be received in connection with the issuance of stock, such as in the case of a rights offering or a distribution of warrants, the fact that such consideration is taken into account in making the antidilution adjustment will not preclude a full adjustment. See paragraph (*b*) of the example in this subparagraph for a case where the application of an adjustment formula with a cumulative feature does not result in a full adjustment and where a change in proportionate interest therefore occurs. See paragraph (*c*) for a case where the application of an adjustment formula with a cumulative feature does result in a full adjustment and where no change in proportionate interest therefore occurs. See paragraph (*d*) for an application of an antidilution formula in the case of a rights offering. See paragraph (*e*) for a case where the application of a noncumulative type adjustment formula will in all cases prevent a change in proportionate interest from occurring in the case of a stock dividend, because of the omission of the cumulative feature.

(ii) The principles of this subparagraph may be illustrated by the following example.

Example. (a) Corporation S has two classes of securities outstanding, convertible debentures and common stock. At the time of issuance of the debentures the corporation had 100 shares of common stock outstanding. Each debenture is interest-paying and is convertible into common stock at a conversion price of $2. The debenture's conversion price is subject to reduction pursuant to the following formula:

(Number of common shares outstanding at date of issue of debentures times initial conversion price) *plus* (Consideration received upon issuance of additional common shares) *divided by* (Number of common shares outstanding at date of issue of debentures) *plus* (Number of additional common shares issued)

Under the formula, common stock dividends are treated as an issue of common stock for zero consideration. If the computation results in a figure which is less than the existing conversion price the conversion price is reduced. However, under the formula, the existing conversion price is never increased. The formula works upon a cumulative basis since the numerator includes the consideration received upon the issuance of all common shares subsequent to the issuance of the debentures, and the reduction effected by the formula because of a sale or issuance of common stock below the existing conversion price is thus limited by any prior sales made above the existing conversion price.

(*b*) In 1972 corporation S sells 100 common shares at $3 per share. In 1973 the corporation declares a stock dividend of 20 shares to all holders of common stock. Under the antidilution formula no adjustment will be made to the conversion price of the debentures to reflect the stock dividend to common stockholders since the prior sale of common stock in excess of the conversion price in 1972 offsets the reduction in the conversion price which would otherwise result, as follows:

$$100\times\$2+\$300\div100+120=\$500\div220=\$2.27$$

Since $2.27 is greater than the existing conversion price of $2 no adjustment is required. As a result, there is an increase in proportionate interest of the common stockholders by reason of the stock dividend and the additional shares of common stock will be treated, pursuant to section 305(b)(2), as a distribution of property to which section 301 applies.

(*c*) Assume the same facts as above, but instead of selling 100 common shares at $3 per share in 1972, assume corporation S sold no shares. Application of the antidilution formula would give rise to an adjustment in the conversion price as follows:

$$100\times\$2+\$0\div100+20=\$200\div120=\$1.67$$

The conversion price, being reduced from $2 to $1.67, fully reflects the stock dividend distributed to the common stockholders. Hence, the distribution of common stock is not treated under section 305(b)(2) as one to

which section 301 applies because the distribution does not increase the proportionate interests of the common shareholders as a class.

(*d*) Corporation S distributes to its shareholders rights entitling the shareholders to purchase a total of 20 shares at $1 per share. Application of the antidilution formula would produce an adjustment in the conversion price as follows:

$$100\times\$2+20\times\$1\div100+20=\$220\div120=\$1.83$$

The conversion price, being reduced from $2 to $1.83, fully reflects the distribution of rights to purchase stock at a price lower than the conversion price. Hence, the distribution of the rights is not treated under section 305(b)(2) as one to which section 301 applies because the distribution does not increase the proportionate interests of the common shareholders as a class.

(*e*) Assume the same facts as in (*b*) above, but instead of using a ''conversion price'' antidilution formula which operates on a cumulative basis, assume corporation S has employed a formula which operates as follows with respect to all stock dividends: The conversion price in effect at the opening of business on the day following the dividend record date is reduced by multiplying such conversion price by a fraction the numerator of which is the number of shares of common stock outstanding at the close of business on the record date and the denominator of which is the sum of such shares so outstanding and the number of shares constituting the stock dividend. Under such a formula the following adjustment would be made to the conversion price upon the declaration of a stock dividend of 20 shares in 1973:

$$200\div200+20=200\div220\times\$2=\$1.82$$

The conversion price, being reduced from $2 to $1.82, fully reflects the stock dividend distributed to the common stockholders. Hence, the distribution of common stock is not treated under section 305(b)(2) as one to which section 301 applies because the distribution does not increase the proportionate interests of the common shareholders as a class.

(2)(i) A distributing corporation either must make the adjustment required by subparagraph (1) of this paragraph as of the date of the distribution of the stock dividend, or must elect (in the manner provided in subdivision (iii) of this subparagraph) to make such adjustment within the time provided in subdivision (ii) of this subparagraph.

(ii) If the distributing corporation elects to make such adjustment, such adjustment must be made no later than the earlier of (*a*) 3 years after the date of the stock dividend, or (*b*) that date as of which the aggregate stock dividends for which adjustment of the conversion ratio has not previously been made total at least 3 percent of the issued and outstanding stock with respect to which such stock dividends were distributed.

(iii) The election provided by subdivision (ii) of this subparagraph shall be made by filing with the income tax return for the taxable year during which the stock dividend is distributed—

(*a*) A statement that an adjustment will be made as provided by that subdivision, and

(*b*) A description of the antidilution provisions under which the adjustment will be made.

(3) Notwithstanding the preceding subparagraph, if a distribution has been made before July 12, 1973, and the adjustment required by subparagraph (1) or the election to make such adjustment was not made before such date, the adjustment or the election to make such adjustment, as the case may be, shall be considered valid if made no later than 15 days following the date of the first annual meeting of the shareholders after July 12, 1973, or July 12, 1974, whichever is earlier. If the election is made within such period, and, if the income tax return has been filed before the time of such election, the statement of adjustment and the description of the antidilution provisions required by subparagraph (2)(iii) shall be filed with the Internal Revenue Service Center with which the income tax return was filed.

(4) See § 1.305–7(b) for a discussion of antidilution adjustments in connection with the application of section 305(c) in conjunction with section 305(b).

(e) *Examples.* The application of section 305(b)(2) to distributions of stock and section 305(c) to deemed distributions of stock may be illustrated by the following examples:

Example 1. Corporation X is organized with two classes of common stock, class A and class B. Each share of stock is entitled to share equally in the assets and earnings and profits of the corporation. Dividends may be paid in stock or in cash on either class of stock without regard to the medium of payment of dividends on the other class. A dividend is declared on the class A stock payable in additional shares of class A stock and a dividend is declared on class B stock payable

in cash. Since the class A shareholders as a class will have increased their proportionate interests in the assets and earnings and profits of the corporation and the class B shareholders will have received cash, the additional shares of class A stock are distributions of property to which section 301 applies. This is true even with respect to those shareholders who may own class A stock and class B stock in the same proportion.

Example 2. Corporation Y is organized with two classes of stock, class A common, and class B, which is nonconvertible and limited and preferred as to dividends. A dividend is declared upon the class A stock payable in additional shares of class A stock and a dividend is declared on the class B stock payable in cash. The distribution of class A stock is not one to which section 301 applies because the distribution does not increase the proportionate interests of the class A shareholders as a class.

Example 3. Corporation K is organized with two classes of stock, class A common, and class B, which is nonconvertible preferred stock. A dividend is declared upon the class A stock payable in shares of class B stock and a dividend is declared on the class B stock payable in cash. Since the class A shareholders as a class have an increased interest in the assets and earnings and profits of the corporation, the stock distribution is treated as a distribution to which section 301 applies. If, however, a dividend were declared upon the class A stock payable in a new class of preferred stock that is subordinated in all respects to the class B stock, the distribution would not increase the proportionate interests of the class A shareholders in the assets or earnings and profits of the corporation and would not be treated as a distribution to which section 301 applies.

Example 4. (i) Corporation W has one class of stock outstanding, class A common. The corporation also has outstanding interest paying securities convertible into class A common stock which have a fixed conversion ratio that is not subject to full adjustment in the event stock dividends or rights are distributed to the class A shareholders. Corporation W distributes to the class A shareholders rights to acquire additional shares of class A stock. During the year, interest is paid on the convertible securities.

(ii) The stock rights and convertible securities are considered to be outstanding stock of the corporation and the distribution increases the proportionate interests of the class A shareholders in the assets and earnings and profits of the corporation. Therefore, the distribution is treated as a distribution to which section 301 applies. The same result would follow if, instead of convertible securities, the corporation had outstanding convertible stock. If, however, the conversion ratio of the securities or stock were fully adjusted to reflect the distribution of rights to the class A shareholders, the rights to acquire class A stock would not increase the proportionate interests of the class A shareholders in the assets and earnings and profits of the corporation and would not be treated as a distribution to which section 301 applies.

Example 5. (i) Corporation S is organized with two classes of stock, class A common and class B convertible preferred. The class B is fully protected against dilution in the event of a stock dividend or stock split with respect to the class A stock; however, no adjustment in the conversion ratio is required to be made until the stock dividends equal 3 percent of the common stock issued and outstanding on the date of the first such stock dividend except that such adjustment must be made no later than 3 years after the date of the stock dividend. Cash dividends are paid annually on the class B stock.

(ii) Corporation S pays a 1 percent stock dividend on the class A stock in 1970. In 1971, another 1 percent stock dividend is paid and in 1972 another 1 percent stock dividend is paid. The conversion ratio of the class B stock is increased in 1972 to reflect the three stock dividends paid on the class A stock. The distributions of class A stock are not distributions to which section 301 applies because they do not increase the proportionate interests of the class A shareholders in the assets and earnings and profits of the corporation.

Example 6. (i) Corporation M is organized with two classes of stock outstanding, class A and class B. Each class B share may be converted, at the option of the holder, into class A shares. During the first year, the conversion ratio is one share of class A stock for each share of class B stock. At the beginning of each subsequent year, the conversion ratio is increased by 0.05 share of class A stock for each share of class B stock. Thus, during the second year, the conversion ratio would be 1.05 shares of class A stock for each share of class B stock, during the third year, the ratio would be 1.10 shares, etc.

(ii) M pays an annual cash dividend on the class A stock. At the beginning of the second year, when the conversion ratio is increased to 1.05 shares of class A stock for each share of class B stock, a distribution of 0.05 shares of class A stock is deemed made under section 305(c) with respect to each share of class B stock, since the proportionate interests of the class B shareholders in the assets or earnings and profits of M are increased and the transaction has the effect described in section 305(b)(2). Accordingly, sections 305(b)(2) and 301 apply to the transaction.

Example 7. (i) Corporation N has two classes of stock outstanding, class A and class B. Each class B share is convertible into class A stock. However, in accordance with a specified formula, the conversion ratio is decreased each time a cash dividend is paid on

the class B stock to reflect the amount of the cash dividend. The conversion ratio is also adjusted in the event that cash dividends are paid on the class A stock to increase the number of class A shares into which the class B shares are convertible to compensate the class B shareholders for the cash dividend paid on the class A stock.

(ii) In 1972, a $1 cash dividend per share is declared and paid on the class B stock. On the date of payment, the conversion ratio of the class B stock is decreased. A distribution of stock is deemed made under section 305(c) to the class A shareholders, since the proportionate interest of the class A shareholders in the assets or earnings and profits of the corporation is increased and the transaction has the effect described in section 305(b)(2). Accordingly, sections 305(b)(2) and 301 apply to the transaction.

(iii) In the following year a cash dividend is paid on the class A stock and none is paid on the class B stock. The increase in conversion rights of the class B shares is deemed to be a distribution under section 305(c) to the class B shareholders since their proportionate interest in the assets or earnings and profits of the corporation is increased and since the transaction has the effect described in section 305(b)(2). Accordingly, sections 305(b)(2) and 301 apply to the transaction.

Example 8. Corporation T has 1,000 shares of stock outstanding. C owns 100 shares. Nine other shareholders each owns 100 shares. Pursuant to a plan for periodic redemptions, T redeems up to 5 percent of each shareholder's stock each year. During the year, each of the nine other shareholders has 5 shares of his stock redeemed for cash. Thus, C's proportionate interest in the assets and earnings and profits of T is increased. Assuming that the cash received by the nine other shareholders is taxable under section 301, C is deemed under section 305(c) to have received a distribution under section 305(b)(2) of 5.25 shares of T stock to which section 301 applies. The amount of C's distribution is measured by the fair market value of the number of shares which would have been distributed to C had the corporation sought to increase his interest by 0.47 percentage points (C owned 10 percent of the T stock immediately before the redemption and 10.47 percent immediately thereafter) and the other shareholders continued to hold 900 shares (i.e.,

(a) $100 \div 955 = 10.47\%$ (percent of C's ownership after redemption)

(b) $100 + x \div 1000 + x = 10.47\%$; $x = 5.25$ (additional shares considered to be distributed to C)).

Since in computing the amount of additional shares deemed to be distributed to C the redemption of shares is disregarded, the redemption of shares will be similarly disregarded in determining the value of the stock of the corporation which is deemed to be distributed. Thus, in the example, 1,005.25 shares of stock are considered as outstanding after the redemption. The value of each share deemed to be distributed to C is then determined by dividing the 1,005.25 shares into the aggregate fair market value of the actual shares outstanding (955) after the redemption.

Example 9. (i) Corporation O has a stock redemption program under which, instead of paying out earnings and profits to its shareholders in the form of dividends, it redeems the stock of its shareholders up to a stated amount which is determined by the earnings and profits of the corporation. If the stock tendered for redemption exceeds the stated amount, the corporation redeems the stock on a pro rata basis up to the stated amount.

(ii) During the year corporation O offers to distribute $10,000 in redemption of its stock. At the time of the offering, corporation O has 1,000 shares outstanding of which E and F each owns 150 shares and G and H each owns 350 shares. The corporation redeems 15 shares from E and 35 shares from G. F and H continue to hold all of their stock.

(iii) F and H have increased their proportionate interests in the assets and earnings and profits of the corporation. Assuming that the cash E and G receive is taxable under section 301, F will be deemed under section 305(c) to have received a distribution under section 305(b)(2) of 16.66 shares of stock to which section 301 applies and H will be deemed under section 305(c) to have received a distribution under section 305(b)(2) of 38.86 shares of stock to which section 301 applies. The amount of the distribution to F and H is measured by the number of shares which would have been distributed to F and H had the corporation sought to increase the interest of F by 0.79 percentage points (F owned 15 percent of the stock immediately before the redemption and 15.79 percent immediately thereafter) and the interest of H by 1.84 percentage points (H owned 35 percent of the stock immediately before the redemption and 36.84 percent immediately thereafter) and E and G had continued to hold 150 shares and 350 shares, respectively (i.e.,

(a) $150 \div 950 + 350 \div 950 = 52.63\%$ (percent of F and H's ownership after redemption)

(b) $500 + y \div 1000 + y = 52.63\%$; $y = 55.52$ (additional shares considered to be distributed to F and H)

(c)(1) $150 \div 500 \times 55.52 = 16.66$ (shares considered to be distributed to F)

(2) $350 \div 500 \times 55.52 = 38.86$ (shares considered to be distributed to H)).

Since in computing the amount of additional shares deemed to be distributed to F and H the redemption of shares is disregarded, the redemption of shares will be similarly disregarded in determining the value of the stock of the corporation which is deemed to be distributed. Thus, in the example, 1,055.52

shares of stock are considered as outstanding after the redemption. The value of each share deemed to be distributed to F and H is then determined by dividing the 1,055.52 shares into the aggregate fair market value of the actual shares outstanding (950) after the redemption.

Example 10. Corporation P has 1,000 shares of stock outstanding. T owns 700 shares of the P stock and G owns 300 shares of the P stock. In a single and isolated redemption to which section 301 applies, the corporation redeems 150 shares of T's stock. Since this is an isolated redemption and is not a part of a periodic redemption plan, G is not treated as having received a deemed distribution under section 305(c) to which sections 305(b)(2) and 301 apply even though he has an increased proportionate interest in the assets and earnings and profits of the corporation.

Example 11. Corporation Q is a large corporation whose sole class of stock is widely held. However, the four largest shareholders are officers of the corporation and each owns 8 percent of the outstanding stock. In 1974, in a distribution to which section 301 applies, the corporation redeems 1.5 percent of the stock from each of the four largest shareholders in preparation for their retirement. From 1970 through 1974, the corporation distributes annual stock dividends to its shareholders. No other distributions were made to these shareholders. Since the 1974 redemptions are isolated and are not part of a plan for periodically redeeming the stock of the corporation, the shareholders receiving stock dividends will not be treated as having received a distribution under section 305(b)(2) even though they have an increased proportionate interest in the assets and earnings and profits of the corporation and whether or not the redemptions are treated as distributions to which section 301 applies.

Example 12. Corporation R has 2,000 shares of class A stock outstanding. Five shareholders own 300 shares each and five shareholders own 100 shares each. In preparation for the retirement of the five major shareholders, corporation R, in a single and isolated transaction, has a recapitalization in which each share of class A stock may be exchanged either for five shares of new class B nonconvertible preferred stock plus 0.4 share of new class C common stock, or for two shares of new class C common stock. As a result of the exchanges, each of the five major shareholders receives 1,500 shares of class B nonconvertible preferred stock and 120 shares of class C common stock. The remaining shareholders each receives 200 shares of class C common stock. None of the exchanges are within the purview of section 305.

Example 13. Corporation P is a widely-held company whose shares are listed for trading on a stock exchange. P distributes annual cash dividends to its shareholders. P purchases shares of its common stock directly from small stockholders (holders of record of 100 shares or less) or through brokers where the holders may not be known at the time of purchase. Where such purchases are made through brokers, they are pursuant to the rules and regulations of the Securities and Exchange Commission. The shares are purchased for the purpose of issuance to employee stock investment plans, to holders of convertible stock or debt, to holders of stock options, or for future acquisitions. Provided the purchases are not pursuant to a plan to increase the proportionate interest of some shareholders and distribute property to other shareholders, the remaining shareholders of P are not treated as having received a deemed distribution under section 305(c) to which section 305(b)(2) and 301 apply, even though they have an increased proportionate interest in the assets and earnings and profits of the corporation.

Example 14. Corporation U is a large manufacturing company whose products are sold through independent dealers. In order to assist individuals who lack capital to become dealers, the corporation has an established investment plan under which it provides 75 percent of the capital necessary to form a dealership corporation and the individual dealer provides the remaining 25 percent. Corporation U receives class A stock and a note representing its 75 percent interest. The individual dealer receives class B stock representing his 25 percent interest. The class B stock is nonvoting until all the class A shares are redeemed. At least 70 percent of the earnings and profits of the dealership corporation must be used each year to retire the note and to redeem the class A stock. The class A stock is redeemed at a fixed price. The individual dealer has no control over the redemption of stock and has no right to have his stock redeemed during the period the plan is in existence. U's investment is thus systematically eliminated and the individual becomes the sole owner of the dealership corporation. Since this type of plan is akin to a security arrangement, the redemptions of the class A stock will not be deemed under section 305(c) as distributions taxable under sections 305(b)(2) and 301 during the years in which the class A stock is redeemed.

Example 15. (i) *Facts.* Corporation V is organized with two classes of stock, class A common and class B convertible preferred. The class B stock is issued for $100 per share and is convertible at the holder's option into class A at a fixed ratio that is not subject to full adjustment in the event stock dividends or rights are distributed to the class A shareholders. The class B stock pays no dividends but it is mandatorily redeemable in 10 years for $200. Under sections 305(c) and 305(b)(4), the entire redemption premium (i.e., the excess of the redemption price over the issue

price) is deemed to be a distribution of preferred stock on preferred stock which is taxable as a distribution of property under section 301. This amount is considered to be distributed over the 10-year period under principles similar to the principles of section 1272(a). During the year, the corporation declares a dividend on the class A stock payable in additional shares of class A stock.

(ii) *Analysis.* The distribution on the class A stock is a distribution to which sections 305(b)(2) and 301 apply since it increases the proportionate interests of the class A shareholders in the assets and earnings and profits of the corporation and the class B shareholders have received property (i.e., the constructive distribution described above). If, however, the conversion ratio of the class B stock were subject to full adjustment to reflect the distribution of stock to class A shareholders, the distribution of stock dividends on the class A stock would not increase the proportionate interest of the class A shareholders in the assets and earnings and profits of the corporation and such distribution would not be a distribution to which section 301 applies.

(iii) *Effective date.* This *Example 15* applies to stock issued on or after December 20, 1995. For previously issued stock, see § 1.305–3(e) *Example (15)* (as contained in the 26 CFR part 1 edition revised April 1, 1995).

[T.D. 7281, 38 FR 18532, July 12, 1973; 38 FR 19910, 19911, July 25, 1973; as amended by T.D. 7329, 39 FR 36860, Oct. 15, 1974; T.D. 8643, 60 FR 66136, Dec. 21, 1995]

§ 1.305–4 Distributions of common and preferred stock.

(a) *In general.* Under section 305(b)(3), a distribution (or a series of distributions) by a corporation which results in the receipt of preferred stock whether or not convertible into common stock) by some common shareholders and the receipt of common stock by other common shareholders is treated as a distribution of property to which section 301 applies. For the meaning of the term *a series of distribution,* see subparagraphs (1) through (6) of § 1.305–3(b).

(b) *Examples.* The application of section 305(b)(3) may be illustrated by the following examples:

Example (1). Corporation X is organized with two classes of common stock, class A and class B. Dividends may be paid in stock or in cash on either class of stock without regard to the medium of payment of dividends on the other class. A dividend is declared on the class A stock payable in additional shares of class A stock and a dividend is declared on class B stock payable in newly authorized class C stock which is nonconvertible and limited and preferred as to dividends. Both the distribution of class A shares and the distribution of new class C shares are distributions to which section 301 applies.

Example (2). Corporation Y is organized with one class of stock, class A common. During the year the corporation declares a dividend on the class A stock payable in newly authorized class B preferred stock which is convertible into class A stock no later than 6 months from the date of distribution at a price that is only slightly higher than the market price of class A stock on the date of distribution. Taking into account the dividend rate, redemption provisions, the marketability of the convertible stock, and the conversion price, it is reasonable to anticipate that within a relatively short period of time some shareholders will exercise their conversion rights and some will not. Since the distribution can reasonably be expected to result in the receipt of preferred stock by some common shareholders and the receipt of common stock by other common shareholders, the distribution is a distribution of property to which section 301 applies.

[T.D. 7281, 38 FR 18536, July 12, 1973]

§ 1.305–5 Distributions on preferred stock.

(a) *In general.* Under section 305(b)(4), a distribution by a corporation of its stock (or rights to acquire its stock) made (or deemed made under section 305(c)) with respect to its preferred stock is treated as a distribution of property to which section 301 applies unless the distribution is made with respect to convertible preferred stock to take into account a stock dividend, stock split, or any similar event (such as the sale of stock at less than the fair market value pursuant to a rights offering) which would otherwise result in the dilution of the conversion right. For purposes of the preceding sentence, an adjustment in the conversion ratio of convertible preferred stock made solely to take into account the distribution by a closed end regulated investment company of a capital gain dividend with respect to the stock into which such stock is convertible shall not be considered a ''similar event.'' The term *preferred stock* generally refers to stock which, in relation to

other classes of stock outstanding, enjoys certain limited rights and privileges (generally associated with specified dividend and liquidation priorities) but does not participate in corporate growth to any significant extent. The distinguishing feature of *preferred stock* for the purposes of section 305(b)(4) is not its privileged position as such, but that such privileged position is limited, and that such stock does not participate in corporate growth to any significant extent. However, a right to participate which lacks substance will not prevent a class of stock from being treated as preferred stock. Thus, stock which enjoys a priority as to dividends and on liquidation but which is entitled to participate, over and above such priority, with another less privileged class of stock in earnings and profits and upon liquidation, may nevertheless be treated as preferred stock for purposes of section 305 if, taking into account all the facts and circumstances, it is reasonable to anticipate at the time a distribution is made (or is deemed to have been made) with respect to such stock that there is little or no likelihood of such stock actually participating in current and anticipated earnings and upon liquidation beyond its preferred interest. Among the facts and circumstances to be considered are the prior and anticipated earnings per share, the cash dividends per share, the book value per share, the extent of preference and of participation of each class, both absolutely and relative to each other, and any other facts which indicate whether or not the stock has a real and meaningful probability of actually participating in the earnings and growth of the corporation. The determination of whether stock is preferred for purposes of section 305 shall be made without regard to any right to convert such stock into another class of stock of the corporation. The term *preferred stock*, however, does not include convertible debentures.

(b) *Redemption premium*—(1) *In general.* If a corporation issues preferred stock that may be redeemed under the circumstances described in this paragraph (b) at a price higher than the issue price, the difference (the redemption premium) is treated under section 305(c) as a constructive distribution (or series of constructive distributions) of additional stock on preferred stock that is taken into account under principles similar to the principles of section 1272(a). However, constructive distribution treatment does not result under this paragraph (b) if the redemption premium does not exceed a de minimis amount, as determined under the principles of section 1273(a)(3). For purposes of this paragraph (b), preferred stock that may be acquired by a person other than the issuer (the third person) is deemed to be redeemable under the circumstances described in this paragraph (b), and references to the issuer include the third person, if—

(i) This paragraph (b) would apply to the stock if the third person were the issuer; and

(ii) Either—

(A) The acquisition of the stock by the third person would be treated as a redemption for federal income tax purposes (under section 304 or otherwise); or

(B) The third person and the issuer are members of the same affiliated group (having the meaning for this purpose given the term by section 1504(a), except that section 1504(b) shall not apply) and a principal purpose of the arrangement for the third person to acquire the stock is to avoid the application of section 305 and paragraph (b)(1) of this section.

(2) *Mandatory redemption or holder put.* Paragraph (b)(1) of this section applies to stock if the issuer is required to redeem the stock at a specified time or the holder has the option (whether or not currently exercisable) to require the issuer to redeem the stock. However, paragraph (b)(1) of this section will not apply if the issuer's obligation to redeem or the holder's ability to require the issuer to redeem is subject to a contingency that is beyond the legal or practical control of either the holder or the holders as a group (or through a related party within the meaning of section 267(b) or 707(b)), and that, based on all of the facts and circumstances as of the issue date, renders remote the likelihood of redemption. For purposes of this paragraph, a contingency does not include the possibility of default, insolvency, or similar circumstances,

or that a redemption may be precluded by applicable law which requires that the issuer have a particular level of capital, surplus, or similar items. A contingency also does not include an issuer's option to require earlier redemption of the stock. For rules applicable if stock may be redeemed at more than one time, see paragraph (b)(4) of this section.

(3) *Issuer call*—(i) *In general.* Paragraph (b)(1) of this section applies to stock by reason of the issuer's right to redeem the stock (even if the right is immediately exercisable), but only if, based on all of the facts and circumstances as of the issue date, redemption pursuant to that right is more likely than not to occur. However, even if redemption is more likely than not to occur, paragraph (b)(1) of this section does not apply if the redemption premium is solely in the nature of a penalty for premature redemption. A redemption premium is not a penalty for premature redemption unless it is a premium paid as a result of changes in economic or market conditions over which neither the issuer nor the holder has legal or practical control.

(ii) *Safe harbor.* For purposes of this paragraph (b)(3), redemption pursuant to an issuer's right to redeem is not treated as more likely than not to occur if—

(A) The issuer and the holder are not related within the meaning of section 267(b) or 707(b) (for purposes of applying sections 267(b) and 707(b) (including section 267(f)(1)), the phrase ''20 percent'' shall be substituted for the phrase ''50 percent'');

(B) There are no plans, arrangements, or agreements that effectively require or are intended to compel the issuer to redeem the stock (disregarding, for this purpose, a separate mandatory redemption obligation described in paragraph (b)(2) of this section); and

(C) Exercise of the right to redeem would not reduce the yield of the stock, as determined under principles similar to the principles of section 1272(a) and the regulations under sections 1271 through 1275.

(iii) *Effect of not satisfying safe harbor.* The fact that a redemption right is not described in paragraph (b)(3)(ii) of this section does not affect the determination of whether a redemption pursuant to the right to redeem is more likely than not to occur.

(4) *Coordination of multiple redemption provisions.* If stock may be redeemed at more than one time, the time and price at which redemption is most likely to occur must be determined based on all of the facts and circumstances as of the issue date. Any constructive distribution under paragraph (b)(1) of this section will result only with respect to the time and price identified in the preceding sentence. However, if redemption does not occur at that identified time, the amount of any additional premium payable on any later redemption date, to the extent not previously treated as distributed, is treated as a constructive distribution over the period from the missed call or put date to that later date, to the extent required under the principles of this paragraph (b).

(5) *Consistency.* The issuer's determination as to whether there is a constructive distribution under this paragraph (b) is binding on all holders of the stock, other than a holder that explicitly discloses that its determination as to whether there is a constructive distribution under this paragraph (b) differs from that of the issuer. Unless otherwise prescribed by the Commissioner, the disclosure must be made on a statement attached to the holder's timely filed federal income tax return for the taxable year that includes the date the holder acquired the stock. The issuer must provide the relevant information to the holder in a reasonable manner. For example, the issuer may provide the name or title and either the address or telephone number of a representative of the issuer who will make available to holders upon request the information required for holders to comply with this provision of this paragraph (b).

(c) *Cross reference.* For rules for applying sections 305(b)(4) and 305(c) to recapitalizations, see § 1.305–7(c).

(d) *Examples.* The application of sections 305(b)(4) and 305(c) may be illustrated by the following examples:

Example 1. (i) Corporation T has outstanding 1,000 shares of $100 par 5-percent cumulative preferred stock and 10,000 shares of no-

par common stock. The corporation is 4 years in arrears on dividends to the preferred shareholders. The issue price of the preferred stock is $100 per share. Pursuant to a recapitalization under section 368(a)(1)(E), the preferred shareholders exchange their preferred stock, including the right to dividend arrearages, on the basis of one old preferred share for 1.20 newly authorized class A preferred shares. Immediately following the recapitalization, the new class A shares are traded at $100 per share. The class A shares are entitled to a liquidation preference of $100. The preferred shareholders have increased their proportionate interest in the assets or earnings and profits of corporation T since the fair market value of 1.20 shares of class A preferred stock ($120) exceeds the issue price of the old preferred stock ($100). Accordingly, the preferred shareholders are deemed under section 305(c) to receive a distribution in the amount of $20 on each share of old preferred stock and the distribution is one to which sections 305(b)(4) and 301 apply.

(ii) The same result would occur if the fair market value of the common stock immediately following the recapitalization were $20 per share and each share of preferred stock were exchanged for one share of the new class A preferred stock and one share of common stock.

Example 2. Corporation A, a publicly held company whose stock is traded on a securities exchange (or in the over-the-counter market) has two classes of stock outstanding, common and cumulative preferred. Each share of preferred stock is convertible into .75 shares of common stock. There are no dividend arrearages. At the time of issue of the preferred stock, there was no plan or prearrangement by which it was to be exchanged for common stock. The issue price of the preferred stock is $100 per share. In order to retire the preferred stock, corporation A recapitalizes in a transaction to which section 368(a)(1)(E) applies and each share of preferred stock is exchanged for one share of common stock. Immediately after the recapitalization the common stock has a fair market value of $110 per share. Notwithstanding the fact that the fair market value of the common stock received in the exchange (determined immediately following the recapitalization) exceeds the issue price of the preferred stock surrendered, the recapitalization is not deemed under section 305(c) to result in a distribution to which sections 305(b)(4) and 301 apply since the recapitalization is not pursuant to a plan to periodically increase a shareholder's proportionate interest in the assets or earnings and profits and does not involve dividend arrearages.

Example 3. Corporation V is organized with two classes of stock, 1,000 shares of class A common and 1,000 shares of class B convertible preferred. Each share of class B stock may be converted into two shares of class A stock. Pursuant to a recapitalization under section 368(a)(1)(E), the 1,000 shares of class A stock are surrendered in exchange for 500 shares of new class A common and 500 shares of newly authorized class C common. The conversion right of class B stock is changed to one share of class A stock and one share of class C stock for each share of class B stock. The change in the conversion right is not deemed under section 305(c) to be a distribution on preferred stock to which sections 305(b)(4) and 301 apply.

Example 4 —(i) *Facts.* Corporation X is a domestic corporation with only common stock outstanding. In connection with its acquisition of Corporation T, X issues 100 shares of its 4% preferred stock to the shareholders of T, who are unrelated to X both before and after the transaction. The issue price of the preferred stock is $40 per share. Each share of preferred stock is convertible at the shareholder's election into three shares of X common stock. At the time the preferred stock is issued, the X common stock has a value of $10 per share. The preferred stock does not provide for its mandatory redemption or for redemption at the option of the holder. It is callable at the option of X at any time beginning three years from the date of issuance for $100 per share. There are no other plans, arrangements, or agreements that effectively require or are intended to compel X to redeem the stock.

(ii) *Analysis.* The preferred stock is described in the safe harbor rule of paragraph (b)(3)(ii) of this section because X and the former shareholders of T are unrelated, there are no plans, arrangements, or agreements that effectively require or are intended to compel X to redeem the stock, and calling the stock for $100 per share would not reduce the yield of the preferred stock. Therefore, the $60 per share call premium is not treated as a constructive distribution to the shareholders of the preferred stock under paragraph (b) of this section.

Example 5 —(i) *Facts*—(A) Corporation Y is a domestic corporation with only common stock outstanding. On January 1, 1996, Y issues 100 shares of its 10% preferred stock to a holder. The holder is unrelated to Y both before and after the stock issuance. The issue price of the preferred stock is $100 per share. The preferred stock is—

(1) Callable at the option of Y on or before January 1, 2001, at a price of $105 per share plus any accrued but unpaid dividends; and

(2) Mandatorily redeemable on January 1, 2006, at a price of $100 per share plus any accrued but unpaid dividends.

(B) The preferred stock provides that if Y fails to exercise its option to call the preferred stock on or before January 1, 2001, the holder will be entitled to appoint a majority of Y's directors. Based on all of the facts and

circumstances as of the issue date, Y is likely to have the legal and financial capacity to exercise its right to redeem. There are no other facts and circumstances as of the issue date that would affect whether Y will call the preferred stock on or before January 1, 2001.

(ii) *Analysis.* Under paragraph (b)(3)(i) of this section, paragraph (b)(1) of this section applies because, by virtue of the change of control provision and the absence of any contrary facts, it is more likely than not that Y will exercise its option to call the preferred stock on or before January 1, 2001. The safe harbor rule of paragraph (b)(3)(ii) of this section does not apply because the provision that failure to call will cause the holder to gain control of the corporation is a plan, arrangement, or agreement that effectively requires or is intended to compel Y to redeem the preferred stock. Under paragraph (b)(4) of this section, the constructive distribution occurs over the period ending on January 1, 2001. Redemption is most likely to occur on that date, because that is the date on which the corporation minimizes the rate of return to the holder while preventing the holder from gaining control. The de minimis exception of paragraph (b)(1) of this section does not apply because the $5 per share difference between the redemption price and the issue price exceeds the amount determined under the principles of section 1273(a)(3) (5×.0025×$105 = $1.31). Accordingly, $5 per share, the difference between the redemption price and the issue price, is treated as a constructive distribution received by the holder on an economic accrual basis over the five-year period ending on January 1, 2001, under principles similar to the principles of section 1272(a).

Example 6. Corporation A, a publicly held company whose stock is traded on a securities exchange (or in the over-the-counter market) has two classes of stock outstanding, common and preferred. The preferred stock is nonvoting and nonconvertible, limited and preferred as to dividends, and has a fixed liquidation preference. There are no dividend arrearages. At the time of issue of the preferred stock, there was no plan or prearrangement by which it was to be exchanged for common stock. In order to retire the preferred stock, corporation A recapitalizes in a transaction to which section 368(a)(1)(E) applies and the preferred stock is exchanged for common stock. The transaction is not deemed to be a distribution under section 305(c) and sections 305(b) and 301 do not apply to the transaction. The same result would follow if the preferred stock was exchanged in any reorganization described in section 368(a)(1) for a new preferred stock having substantially the same market value and having no greater call price or liquidation preference than the old preferred stock, whether the new preferred stock has voting rights or is convertible into common stock of corporation A at a fixed ratio subject to change solely to take account of stock dividends, stock splits, or similar transactions with respect to the stock into which the preferred stock is convertible.

Example 7 —(i) *Facts*—(A) Corporation Z is a domestic corporation with only common stock outstanding. On January 1, 1996, Z issues 100 shares of its 10% preferred stock to C, an individual unrelated to Z both before and after the stock issuance. The issue price of the preferred stock is $100 per share. The preferred stock is—

(1) Not callable for a period of 5 years from the issue date;

(2) Callable at the option of Z on January 1, 2001, at a price of $110 per share plus any accrued but unpaid dividends;

(3) Callable at the option of Z on July 1, 2002, at a price of $120 per share plus any accrued but unpaid dividends; and

(4) Mandatorily redeemable on January 1, 2004, at a price of $150 per share plus any accrued but unpaid dividends.

(B) There are no other plans, arrangements, or agreements between Z and C concerning redemption of the stock. Moreover, there are no other facts and circumstances as of the issue date that would affect whether Z will call the preferred stock on either January 1, 2001, or July 1, 2002.

(ii) *Analysis.* This stock is described in paragraph (b)(2) of this section because it is mandatorily redeemable. It is also potentially described in paragraph (b)(3)(i) of this section because it is callable at the option of the issuer. The safe harbor rule of paragraph (b)(3)(ii) of this section does not apply to the option to call on January 1, 2001, because the call would reduce the yield of the stock when compared to the yield produced by the January 1, 2004, mandatory redemption feature. Moreover, absent any other facts indicating a contrary result, the fact that redemption on January 1, 2001, would produce the lowest yield indicates that redemption is most likely to occur on that date. Under paragraph (b)(4) of this section, paragraph (b)(1) of this section applies with respect to the issuer's right to call on January 1, 2001, because redemption is most likely to occur on January 1, 2001, for $110 per share. The de minimis exception of paragraph (b)(1) of this section does not apply because the $10 per share difference between the redemption price payable in 2001 and the issue price exceeds the amount determined under the principles of section 1273(a)(3) (5×.0025×$110=$1.38). Accordingly, $10 per share, the difference between the redemption price and the issue price, is treated as a constructive distribution received by the holder on an economic accrual basis over the five-year period ending January 1, 2001, under principles similar to the principles of section 1272(a).

(iii) *Coordination rules*—(A) If Z does not exercise its option to call the preferred stock on January 1, 2001, paragraph (b)(4) of this section provides that the principles of paragraph (b) of this section must be applied to determine if any remaining constructive distribution occurs. Under paragraphs (b)(3)(i) and (b)(4) of this section, paragraph (b)(1) of this section applies because, absent any other facts indicating a contrary result, the fact that redemption on July 1, 2002, would produce a lower yield than the yield produced by the mandatory redemption feature indicates that redemption on that date is most likely to occur. The safe harbor rule of paragraph (b)(3)(ii) of this section does not apply to the option to call on July 1, 2002, because, as of January 1, 2001, a call by Z on July 1, 2002, for $120 would reduce the yield of the stock. The de minimis exception of paragraph (b)(1) of this section does not apply because the $10 per share difference between the redemption price and the issue price (revised as of the missed call date as provided by paragraph (b)(4) of this section) exceeds the amount determined under the principles of section 1273(a)(3) (1×.0025×$120=$.30). Accordingly, the $10 per share of additional redemption premium that is payable on July 1, 2002, is treated as a constructive distribution received by the holder on an economic accrual basis over the period between January 1, 2001, and July 1, 2002, under principles similar to the principles of section 1272(a).

(B) If Z does not exercise its second option to call the preferred stock on July 1, 2002, then the $30 additional redemption premium that is payable on January 1, 2004, is treated as a constructive distribution under paragraphs (b)(2) and (b)(1) of this section. The de minimis exception of paragraph (b)(1) of this section does not apply because the $30 per share difference between the redemption price and the issue price (revised as of the second missed call date) exceeds the amount determined under the principles of section 1273(a)(3) (1×.0025×$150=$.38). The holder is treated as receiving the constructive distribution on an economic accrual basis over the period between July 1, 2002, and January 1, 2004, under principles similar to the principles of section 1272(a).

Example 8 —(i) *Facts.* The facts are the same as in paragraph (i) of Example 7, except that, based on all of the facts and circumstances as of the issue date (including an expected lack of funds on the part of Z), it is unlikely that Z will exercise the right to redeem on either January 1, 2001, or July 1, 2002.

(ii) *Analysis.* The safe harbor rule of paragraph (b)(3)(ii) of this section does not apply to the option to call on either January 1, 2001, or July 1, 2002, because each call would reduce the yield of the stock. Under paragraph (b)(3)(i) of this section, neither option to call is more likely than not to occur, because, based on all of the facts and circumstances as of the issue date (including an expected lack of funds on the part of Z), it is not more likely than not that Z will exercise either option. However, the $50 per share redemption premium that is payable on January 1, 2004, is treated as a constructive distribution under paragraphs (b)(1) and (2) of this section, regardless of whether Z is anticipated to have sufficient funds to redeem on that date, because Z is required to redeem the stock on that date. The de minimis exception of paragraph (b)(1) of this section does not apply because the $50 per share difference between the redemption price and the issue price exceeds the amount determined under the principles of section 1273(a)(3)(8×.0025×$150=$3).

Example 9. Corporation Q is organized with 10,000 shares of class A stock and 1,000 shares of class B stock. The terms of the class B stock require that the class B have a preference of $5 per share with respect to dividends and $100 per share with respect to liquidation. In addition, upon a distribution of $10 per share to the class A stock, class B participates equally in any additional dividends. The terms also provide that upon liquidation the class B stock participates equally after the class A stock receives $100 per share. Corporation Q has no accumulated earnings and profits. In 1971 it earned $10,000, the highest earnings in its history. The corporation is in an industry in which it is reasonable to anticipate a growth in earnings of 5 percent per year. In 1971 the book value of corporation Q's assets totalled $100,000. In that year the corporation paid a dividend of $5 per share to the class B stock and $.50 per share to the class A. In 1972 the corporation had no earnings and in lieu of a $5 dividend distributed one share of class B stock for each outstanding share of class B. No distribution was made to the class A stock. Since, in 1972, it was not reasonable to anticipate that the class B stock would participate in the current and anticipated earnings and growth of the corporation beyond its preferred interest, the class B stock is preferred stock and the distribution of class B shares to the class B shareholders is a distribution to which sections 305(b)(4) and 301 apply.

Example 10. Corporation P is organized with 10,000 shares of class A stock and 1,000 shares of class B stock. The terms of the class B stock require that the class B have a preference of $5 per share with respect to dividends and $100 per share with respect to liquidation. In addition, upon a distribution of $5 per share to the class A stock, class B participates equally in any additional dividends. The terms also provide that upon liquidation the class B stock participates equally after the class A receives $100 per share. Corporation P has accumulated earnings and profits of $100,000. In 1971 it earned

$75,000. The corporation is in an industry in which it is reasonable to anticipate a growth in earnings of 10 percent per year. In 1971 the book value of corporation P's assets totalled $5 million. In that year the corporation paid a dividend of $5 per share to the class B stock, $5 per share to the class A stock, and it distributed an additional $1 per share to both class A and class B stock. In 1972 the corporation had earnings of $82,500. In that year it paid a dividend of $5 per share to the class B stock and $5 per share to the class A stock. In addition, the corporation declared stock dividends of one share of class B stock for every 10 outstanding shares of class B and one share of class A stock for every 10 outstanding shares of class A. Since, in 1972, it was reasonable to anticipate that both the class B stock and the class A stock would participate in the current and anticipated earnings and growth of the corporation beyond their preferred interests, neither class is preferred stock and the stock dividends are not distributions to which section 305(b)(4) applies.

(e) *Effective date.* The rules of paragraph (b) of this section and *Examples 4, 5, 7,* and *8* of paragraph (d) of this section apply to stock issued on or after December 20, 1995. For rules applicable to previously issued stock, see § 1.305–5 (b) and (d) *Examples (4), (5),* and (*7*) (as contained in the 26 CFR part 1 edition revised April 1, 1995). Although the rules of paragraph (b) of this section and the revised examples do not apply to stock issued before December 20, 1995, the rules of sections 305(c)(1), (2), and (3) apply to stock described therein issued on or after October 10, 1990, except as provided in section 11322(b)(2) of the Revenue Reconciliation Act of 1990 (Public Law 101–508 Stat.). Moreover, except as provided in section 11322(b)(2) of the Revenue Reconciliation Act of 1990 (Public Law 101–508 Stat.), with respect to stock issued on or after October 10, 1990, and issued before December 20, 1995, the economic accrual rule of section 305(c)(3) will apply to the entire call premium on stock that is not described in paragraph (b)(2) of this section if the premium is considered to be unreasonable under the principles of § 1.305–5(b) (as contained in the 26 CFR part 1 edition revised April 1, 1995). A call premium described in the preceding sentence will be accrued over the period of time during which the preferred stock cannot be called for redemption.

[T.D. 7281, 38 FR 18536, July 12, 1973, as amended by T.D. 7329, 39 FR 36860, Oct. 15, 1974; T.D. 8643, 60 FR 66136, Dec. 21, 1995]

§ 1.305–6 Distributions of convertible preferred.

(a) *In general.* (1) Under section 305(b)(5), a distribution by a corporation of its convertible preferred stock or rights to acquire such stock made or considered as made with respect to its stock is treated as a distribution of property to which section 301 applies unless the corporation establishes that such distribution will not result in a disproportionate distribution as described in § 1.305–3.

(2) The distribution of convertible preferred stock is likely to result in a disproportionate distribution when both of the following conditions exist: (i) The conversion right must be exercised within a relatively short period of time after the date of distribution of the stock; and (ii) taking into account such factors as the dividend rate, the redemption provisions, the marketability of the convertible stock, and the conversion price, it may be anticipated that some shareholders will exercise their conversion rights and some will not. On the other hand, where the conversion right may be exercised over a period of many years and the dividend rate is consistent with market conditions at the time of distribution of the stock, there is no basis for predicting at what time and the extent to which the stock will be converted and it is unlikely that a disproportionate distribution will result.

(b) *Examples.* The application of section 305(b)(5) may be illustrated by the following examples:

Example (1). Corporation Z is organized with one class of stock, class A common. During the year the corporation declares a dividend on the class A stock payable in newly authorized class B preferred stock which is convertible into class A stock for a period of 20 years from the date of issuance. Assuming dividend rates are normal in light of existing conditions so that there is no basis for predicting the extent to which the stock will be converted, the circumstances will ordinarily be sufficient to establish that

a disproportionate distribution will not result since it is impossible to predict the extent to which the class B stock will be converted into class A stock. Accordingly, the distribution of class B stock is not one to which section 301 applies.

Example (2). Corporation X is organized with one class of stock, class A common. During the year the corporation declares a dividend on the class A stock payable in newly authorized redeemable class C preferred stock which is convertible into class A common stock no later than 4 months from the date of distribution at a price slightly higher than the market price of class A stock on the date of distribution. By prearrangement with corporation X, corporation Y, an insurance company, agrees to purchase class C stock from any shareholder who does not wish to convert. By reason of this prearrangement, it is anticipated that the shareholders will either sell the class C stock to the insurance company (which expects to retain the shares for investment purposes) or will convert. As a result, some of the shareholders exercise their conversion privilege and receive additional shares of class A stock, while other shareholders sell their class C stock to corporation Y and receive cash. The distribution is a distribution to which section 301 applies since it results in the receipt of property by some shareholders and an increase in the proportionate interests of other shareholders.

[T.D. 7281, 38 FR 18538, July 12, 1973]

§ 1.305–7 Certain transactions treated as distributions.

(a) *In general.* Under section 305(c), a change in conversion ratio, a change in redemption price, a difference between redemption price and issue price, a redemption which is treated as a distribution to which section 301 applies, or any transaction (including a recapitalization) having a similar effect on the interest of any shareholder may be treated as a distribution with respect to any shareholder whose proportionate interest in the earnings and profits or assets of the corporation is increased by such change, difference, redemption, or similar transaction. In general, such change, difference, redemption, or similar transaction will be treated as a distribution to which sections 305(b) and 301 apply where—

(1) The proportionate interest of any shareholder in the earnings and profits or assets of the corporation deemed to have made such distribution is increased by such change, difference, redemption, or similar transaction; and

(2) Such distribution has the result described in paragraph (2), (3), (4), or (5) of section 305(b).

Where such change, difference, redemption, or similar transaction is treated as a distribution under the provisions of this section, such distribution will be deemed made with respect to any shareholder whose interest in the earnings and profits or assets of the distributing corporation is increased thereby. Such distribution will be deemed to be a distribution of the stock of such corporation made by the corporation to such shareholder with respect to his stock. Depending upon the facts presented, the distribution may be deemed to be made in common or preferred stock. For example, where a redemption premium exists with respect to a class of preferred stock under the circumstances described in § 1.305–5(b) and the other requirements of this section are also met, the distribution will be deemed made with respect to such preferred stock, in stock of the same class. Accordingly, the preferred shareholders are considered under sections 305(b)(4) and 305(c) to have received a distribution of preferred stock to which section 301 applies. See the examples in §§ 1.305–3(e) and 1.305–5(d) for further illustrations of the application of section 305(c).

(b) *Antidilution provisions.* (1) For purposes of applying section 305(c) in conjunction with section 305(b), a change in the conversion ratio or conversion price of convertible preferred stock (or securities), or in the exercise price of rights or warrants, made pursuant to a bona fide, reasonable, adjustment formula (including, but not limited to, either the so-called ''market price'' or ''conversion price'' type of formulas) which has the effect of preventing dilution of the interest of the holders of such stock (or securities) will not be considered to result in a deemed distribution of stock. An adjustment in the conversion ratio or price to compensate for cash or property distributions to other shareholders that are taxable under section 301, 356(a)(2), 871(a)(1)(A), 881(a)(1), 852(b), or 857(b) will not be considered as made pursuant to a bona fide adjustment formula.

(2) The principles of this paragraph may be illustrated by the following example:

Example. (i) Corporation U has two classes of stock outstanding, class A and class B. Each class B share is convertible into class A stock. In accordance with a bonafide, reasonable, antidilution provision, the conversion price is adjusted if the corporation transfers class A stock to anyone for a consideration that is below the conversion price.

(ii) The corporation sells class A stock to the public at the current market price but below the conversion price. Pursuant to the antidilution provision, the conversion price is adjusted downward. Such a change in conversion price will not be deemed to be a distribution under section 305(c) for the purposes of section 305(b).

(c) *Recapitalizations.* (1) A recapitalization (whether or not an isolated transaction) will be deemed to result in a distribution to which section 305(c) and this section apply if—

(i) It is pursuant to a plan to periodically increase a shareholder's proportionate interest in the assets or earnings and profits of the corporation, or

(ii) A shareholder owning preferred stock with dividends in arrears exchanges his stock for other stock and, as a result, increases his proportionate interest in the assets or earnings and profits of the corporation. An increase in a preferred shareholder's proportionate interest occurs in any case where the fair market value or the liquidation preference, whichever is greater, of the stock received in the exchange (determined immediately following the recapitalization), exceeds the issue price of the preferred stock surrendered.

(2) In a case to which subparagraph (1)(ii) of this paragraph applies, the amount of the distribution deemed under section 305(c) to result from the recapitalization is the lesser of (i) the amount by which the fair market value or the liquidation preference, whichever is greater, of the stock received in the exchange (determined immediately following the recapitalization) exceeds the issue price of the preferred stock surrendered, or (ii) the amount of the dividends in arrears.

(3) For purposes of applying subparagraphs (1) and (2) of this paragraph with respect to stock issued before July 12, 1973, the term *issue price of the preferred stock surrendered* shall mean the greater of the issue price or the liquidation preference (not including dividends in arrears) of the stock surrendered.

(4) For an illustration of the application of this paragraph, see Example (12) of § 1.305–3(e) and *Examples (1), (2), (3), and (6)* of § 1.305–5(d).

(5) For rules relating to redemption premiums on preferred stock, see § 1.305–5(b).

[T.D. 7281, 38 FR 18538, July 12, 1973, as amended by T.D. 8643, 60 FR 66138, Dec. 21, 1995]

§ 1.305–8 Effective dates.

(a) *In general.* Section 421(b) of the Tax Reform Act of 1969 (83 Stat. 615) provides as follows:

(b) *Effective dates.* (1) Except as otherwise provided in this subsection, the amendment made by subsection (a) shall apply with respect to distributions (or deemed distributions) made after January 10, 1969, in taxable years ending after such date.

(2)(A) Section 305(b)(2) of the Internal Revenue Code of 1954 (as added by subsection (a) shall not apply to a distribution (or deemed distribution) of stock made before January 1, 1991, with respect to stock (i) outstanding on January 10, 1969, (ii) issued pursuant to a contract binding on January 10, 1969, on the distributing corporation, (iii) which is additional stock of that class of stock which (as of January 10, 1969) had the largest fair market value of all classes of stock of the corporation (taking into account only stock outstanding on January 10, 1969, or issued pursuant to a contract binding on January 10, 1969), (iv) described in subparagraph (c)(iii), or (v) issued in a prior distribution described in clause (i), (ii), (iii), or (iv).

(B) Subparagraph (A) shall apply only if—

(i) The stock as to which there is a receipt of property was outstanding on January 10, 1969 (or was issued pursuant to a contract binding on January 10, 1969, on the distributing corporation), and

(ii) If such stock and any stock described in subparagraph (A)(i) were also outstanding on January 10, 1968, a distribution of property was made on or before January 10, 1969, with respect to such stock, and a distribution of stock was made on or before January 10, 1969, with respect to such stock described in subparagraph (A)(i).

(C) Subparagraph (A) shall cease to apply when at any time after October 9, 1969, the distributing corporation issues any of its stock (other than in a distribution of stock with respect to stock of the same class) which is not—

(i) Nonconvertible preferred stock,

(ii) Additional stock of that class of stock which meets the requirements of subparagraph (A)(iii), or

(iii) Preferred stock which is convertible into stock which meets the requirements of subparagraph (A)(iii) at a fixed conversion ratio which takes account of all stock dividends and stock splits with respect to the stock into which such convertible stock is convertible.

(D) For purposes of this paragraph, the term *stock* includes rights to acquire such stock.

(3) In cases to which Treasury Decision 6990 (promulgated January 10, 1969) would not have applied, in applying paragraphs (1) and (2) April 22, 1969, shall be substituted for January 10, 1969.

(4) Section 305(b)(4) of the Internal Revenue Code of 1954 (as added by subsection (a)) shall not apply to any distribution (or deemed distribution) with respect to preferred stock (including any increase in the conversation ratio of convertible stock) made before January 1, 1991, pursuant to the terms relating to the issuance of such stock which were in effect on January 10, 1969.

(5) With respect to distributions made or considered as made after January 10, 1969, in taxable years ending after such date, to the extent that the amendment made by subsection (a) does not apply by reason of paragraph (2), (3), or (4) of this subsection, section 305 of the Internal Revenue Code of 1954 (as in effect before the amendment made by subsection (a)) shall continue to apply.

(b) *Rules of application*. (1) The rules contained in section 421(b)(2) of the Tax Reform Act of 1969 (83 Stat. 615), hereinafter called ''the Act'', shall apply with respect to the application of section 305(b)(2), section 305(b)(3), and section 305(b)(5). Thus, for example, section 305(b)(5) of the Code will not apply to a distribution of convertible preferred stock made before January 1, 1991, with respect to stock outstanding on January 10, 1969 (or which was issued pursuant to a contract binding on the distributing corporation on January 10, 1969), provided the distribution is pursuant to the terms relating to the issuance of such stock which were in effect on January 10, 1969.

(2)(i) For purposes of section 421(b)(2)(A), (B)(i), and (C) of the Act, stock is considered as outstanding on January 10, 1969, if it could be acquired on such date or some future date by the exercise of a right or conversion privilege in existence on such date (including a right or conversion privilege with respect to stock issued pursuant to a contract binding, on January 10, 1969, on the distributing corporation). Thus, if on January 10, 1969, corporation X has outstanding 1,000 shares of class A common stock and 3,000 shares of class B common stock which are convertible on a one-to-one basis into class A stock, corporation X is considered for purposes of section 421(b)(2)(A), (B)(i), and (C) of the Act to have outstanding on January 10, 1969, 4,000 shares of class A stock (1,000 shares actually outstanding and 3,000 shares that could be acquired by the exercise of the conversion privilege contained in the class B stock) and 3,000 shares of class B stock.

(ii) For the purposes of section 421(b)(2)(A) (other than for the purpose of determining under section 421(b)(2)(A)(iii) that class of stock which as of January 10, 1969, had the largest fair market value of all classes of stock of the corporation), (B)(i), and (C) of the Act, stock will be considered as outstanding on January 10, 1969, if it is issued pursuant to a conversion privilege contained in stock issued, mediately or immediately, as a stock dividend with respect to stock outstanding on January 10, 1969.

(3) If, after applying subparagraph (2) of this paragraph, the class of stock which as of January 10, 1969, had the largest fair market value of all classes of stock of the corporation is a class of stock which is convertible into another class of nonconvertible stock, then for purposes of section 421(b)(2)(C)(ii) of the Act stock issued upon conversion of any such convertible stock (whether or not outstanding on January 10, 1969) into stock of such other class shall be deemed to be stock which meets the requirements of section 421(b)(2)(A)(iii) of the Act.

(4) For purposes of section 421(b) of the Act, stock of a corporation held in its treasury will not be considered as outstanding and a distribution of such stock will be considered to be an issuance of such stock on the date of distribution. Stock of a parent corporation held by its subsidiary is not considered treasury stock.

(5) The following stock shall not be taken into account for purposes of applying section 421(b)(2)(B)(i) of the Act:

(i) Stock issued after January 10, 1969, and before October 10, 1969 (other than stock which was issued pursuant to a contract binding on January 10, 1969, on the distributing corporation); (ii) stock described in section 421(b)(2)(C)(i), (ii), or (iii) of the Act; and (iii) stock issued, mediately or immediately, as a stock dividend with respect to stock of the same class outstanding on January 10, 1969. For example, if on June 1, 1970, corporation Y issues additional stock of that class of stock which as of January 10, 1969, had the largest fair market value of all classes of stock of the corporation, such additional stock will not be taken into account for the purpose of meeting the requirement under section 421(b)(2)(B)(i) of the Act that the stock as to which there is a receipt of property must have been outstanding on January 10, 1969, and thus subparagraph (A) of section 421(b)(2) of the Act will not, where otherwise applicable, cease to apply.

(6) Section 421(b)(2)(A) of the Act, if otherwise applicable, will not cease to apply if the distributing corporation issues after October 9, 1969, securities which are convertible into stock that meets the requirements of section 421(b)(2)(A)(iii) of the Act at a fixed conversion ratio which takes account of all stock dividends and stock splits with respect to the stock into which the securities are convertible.

(7) Under section 421(b)(4) of the Act, section 305(b)(4) does not apply to any distribution (or deemed distribution) by a corporation with respect to preferred stock made before January 1, 1991, if such distribution is pursuant to the terms relating to the issuance of such stock which were in effect on January 10, 1969. For example, if as of January 10, 1969, a corporation had followed the practice of paying stock dividends on preferred stock (or of periodically increasing the conversion ratio of convertible preferred stock) or if the preferred stock provided for a redemption price in excess of the issue price, then section 305(b)(4) would not apply to any distribution of stock made (or which would be considered made if section 305(b)(4) applied) before January 1, 1991, pursuant to such practice.

(8) If section 421(b)(2) is not applicable and, for that reason, a distribution (or deemed distribution) is treated as a distribution to which section 301 applies by virtue of the application of section 305(b)(2), (b)(3), or (b)(5), it is irrelevant that, by reason of the application of section 421(b)(4) of such Act, section 305(b)(4) is not applicable to the distribution.

[T.D. 7281, 38 FR 18539, July 12, 1973]

§ 1.306–1 General.

(a) Section 306 provides, in general, that the proceeds from the sale or redemption of certain stock (referred to as ''section 306 stock'') shall be treated either as ordinary income or as a distribution of property to which section 301 applies. Section 306 stock is defined in section 306(c) and is usually preferred stock received either as a nontaxable dividend or in a transaction in which no gain or loss is recognized. Section 306(b) lists certain circumstances in which the special rules of section 306(a) shall not apply.

(b)(1) If a shareholder sells or otherwise disposes of section 306 stock (other than by redemption or within the exceptions listed in section 306(b)), the entire proceeds received from such disposition shall be treated as ordinary income to the extent that the fair market value of the stock sold, on the date distributed to the shareholder, would have been a dividend to such shareholder had the distributing corporation distributed cash in lieu of stock. Any excess of the amount received over the sum of the amount treated as ordinary income plus the adjusted basis of the stock disposed of, shall be treated as gain from the sale of a capital asset or noncapital asset as the case may be. No loss shall be recognized. No reduction of earnings and profits results from any disposition of stock other than a redemption. The term *disposition* under section 306(a)(1) includes, among other things, pledges of stock under certain circumstances, particularly where the pledgee can look only to the stock itself as its security.

(2) Section 306(a)(1) may be illustrated by the following examples:

Example (1). On December 15, 1954, A and B owned equally all of the stock of Corporation

X which files its income tax return on a calendar year basis. On that date Corporation X distributed pro rata 100 shares of preferred stock as a dividend on its outstanding common stock. On December 15, 1954, the preferred stock had a fair market value of $10,000. On December 31, 1954, the earnings and profits of Corporation X were $20,000. The 50 shares of preferred stock so distributed to A had an allocated basis to him of $10 per share or a total of $500 for the 50 shares. Such shares had a fair market value of $5,000 when issued. A sold the 50 shares of preferred stock on July 1, 1955, for $6,000. Of this amount $5,000 will be treated as ordinary income; $500 ($6,000 minus $5,500) will be treated as gain from the sale of a capital or noncapital asset as the case may be.

Example (2). The facts are the same as in *Example 1* except that A sold his 50 shares of preferred stock for $5,100. Of this amount $5,000 will be treated as ordinary income. No loss will be allowed. There will be added back to the basis of the common stock of Corporation X with respect to which the preferred stock was distributed, $400, the allocated basis of $500 reduced by the $100 received.

Example (3). The facts are the same as in *Example 1* except that A sold 25 of his shares of preferred stock for $2,600. Of this amount $2,500 will be treated as ordinary income. No loss will be allowed. There will be added back to the basis of the common stock of Corporation X with respect to which the preferred stock was distributed, $150, the allocated basis of $250 reduced by the $100 received.

(c) The entire amount received by a shareholder from the redemption of section 306 stock shall be treated as a distribution of property under section 301. See also section 303 (relating to distribution in redemption of stock to pay death taxes).

[T.D. 6500, 25 FR 11607, Nov. 26, 1960, as amended by T.D. 7556, 43 FR 34128, Aug. 3, 1978]

§ 1.306–2 Exception.

(a) If a shareholder terminates his entire stock interest in a corporation—

(1) By a sale or other disposition within the requirements of section 306(b)(1)(A), or

(2) By redemption under section 302(b)(3) (through the application of section 306(b)(1)(B)),

the amount received from such disposition shall be treated as an amount received in part or full payment for the stock sold or redeemed. In the case of a sale, only the stock interest need be terminated. In determining whether an entire stock interest has been terminated under section 306(b)(1)(A), all of the provisions of section 318(a) (relating to constructive ownership of stock) shall be applicable. In determining whether a shareholder has terminated his entire interest in a corporation by a redemption of his stock under section 302(b)(3), all of the provisions of section 318(a) shall be applicable unless the shareholder meets the requirements of section 302(c)(2) (relating to termination of all interest in the corporation). If the requirements of section 302(c)(2) are met, section 318(a)(1) (relating to members of a family) shall be inapplicable. Under all circumstances paragraphs (2), (3), (4), and (5) of section 318(a) shall be applicable.

(b) Section 306(a) does not apply to—

(1) Redemptions of section 306 stock pursuant to a partial or complete liquidation of a corporation to which part II (section 331 and following), subchapter C, chapter 1 of the Code applies,

(2) Exchanges of section 306 stock solely for stock in connection with a reorganization or in an exchange under section 351, 355, or section 1036 (relating to exchanges of stock for stock in the same corporation) to the extent that gain or loss is not recognized to the shareholder as the result of the exchange of the stock (see paragraph (d) of § 1.306–3 relative to the receipt of other property), and

(3) A disposition or redemption, if it is established to the satisfaction of the Commissioner that the distribution, and the disposition or redemption, was not in pursuance of a plan having as one of its principal purposes the avoidance of Federal income tax. However, in the case of a prior or simultaneous disposition (or redemption) of the stock with respect to which the section 306 stock disposed of (or redeemed) was issued, it is not necessary to establish that the distribution was not in pursuance of such a plan. For example, in the absence of such a plan and of any other facts the first sentence of this subparagraph would be applicable to the case of dividends and isolated dispositions of section 306 stock by minority shareholders. Similarly, in the absence of such a plan and of any other

facts, if a shareholder received a distribution of 100 shares of section 306 stock on his holdings of 100 shares of voting common stock in a corporation and sells his voting common stock before he disposes of his section 306 stock, the subsequent disposition of his section 306 stock would not ordinarily be considered a disposition one of the principal purposes of which is the avoidance of Federal income tax.

[T.D. 6500, 25 FR 11607, Nov. 26, 1960, as amended by T.D. 6969, 33 FR 11998, Aug. 23, 1968]

§ 1.306–3 Section 306 stock defined.

(a) For the purpose of subchapter C, chapter 1 of the code, the term *section 306 stock* means stock which meets the requirements of section 306(c)(1). Any class of stock distributed to a shareholder in a transaction in which no amount is includible in the income of the shareholder or no gain or loss is recognized may be section 306 stock, if a distribution of money by the distributing corporation in lieu of such stock would have been a dividend in whole or in part. However, except as provided in section 306(g), if no part of a distribution of money by the distributing corporation in lieu of such stock would have been a dividend, the stock distributed will not constitute section 306 stock.

(b) For the purpose of section 306, rights to acquire stock shall be treated as stock. Such rights shall not be section 306 stock if no part of the distribution would have been a dividend if money had been distributed in lieu of the rights. When stock is acquired by the exercise of rights which are treated at section 306 stock, the stock acquired is section 306 stock. Upon the disposition of such stock (other than by redemption or within the exceptions listed in section 306(b)), the proceeds received from the disposition shall be treated as ordinary income to the extent that the fair market value of the stock rights, on the date distributed to the shareholder, would have been a dividend to the shareholder had the distributing corporation distributed cash in lieu of stock rights. Any excess of the amount realized over the sum of the amount treated as ordinary income plus the adjusted basis of the stock, shall be treated as gain from the sale of the stock.

(c) Section 306(c)(1)(A) provides that section 306 stock is any stock (other than common issued with respect to common) distributed to the shareholder selling or otherwise disposing thereof if, under section 305(a) (relating to distributions of stock and stock rights) any part of the distribution was not included in the gross income of the distributee.

(d) Section 306(c)(1)(B) includes in the definition of section 306 stock any stock except common stock, which is received by a shareholder in connection with a reorganization under section 368 or in a distribution or exchange under section 355 (or so much of section 356 as relates to section 355) provided the effect of the transaction is substantially the same as the receipt of a stock dividend, or the stock is received in exchange for section 306 stock. If, in a transaction to which section 356 is applicable, a shareholder exchanges section 306 stock for stock and money or other property, the entire amount of such money and of the fair market value of the other property (not limited to the gain recognized) shall be treated as a distribution of property to which section 301 applies. Common stock received in exchange for section 306 stock in a recapitalization shall not be considered section 306 stock. Ordinarily, section 306 stock includes stock which is not common stock received in pursuance of a plan of reorganization (within the meaning of section 368(a)) or received in a distribution or exchange to which section 355 (or so much of section 356 as relates to section 355) applies if cash received in lieu of such stock would have been treated as a dividend under section 356(a)(2) or would have been treated as a distribution to which section 301 applies by virtue of section 356(b) or section 302(d). The application of the preceding sentence is illustrated by the following examples:

Example (1). Corporation A, having only common stock outstanding, is merged in a statutory merger (qualifying as a reorganization under section 368(a)) with Corporation B. Pursuant to such merger, the shareholders of Corporation A received both common and

preferred stock in Corporation B. The preferred stock received by such shareholders is section 306 stock.

Example (2). X and Y each own one-half of the 2,000 outstanding shares of preferred stock and one-half of the 2,000 outstanding shares of common stock of Corporation C. Pursuant to a reorganization within the meaning of section 368(a)(1)(E) (recapitalization) each shareholder exchanges his preferred stock for preferred stock of a new issue which is not substantially different from the preferred stock previously held. Unless the preferred stock exchanged was itself section 306 stock the preferred stock received is not section 306 stock.

(e) Section 306(c)(1)(C) includes in the definition of section 306 stock any stock (except as provided in section 306(c)(1)(B)) the basis of which in the hands of the person disposing of such stock, is determined by reference to section 306 stock held by such shareholder or any other person. Under this paragraph common stock can be section 306 stock. Thus, if a person owning section 306 stock in Corporation A transfers it to Corporation B which is controlled by him in exchange for common stock of Corporation B in a transaction to which section 351 is applicable, the common stock so received by him would be section 306 stock and subject to the provisions of section 306(a) on its disposition. In addition, the section 306 stock transferred is section 306 stock in the hands of Corporation B, the transferee. Section 306 stock transferred by gift remains section 306 stock in the hands of the donee. Stock received in exchange for section 306 stock under section 1036(a) (relating to exchange of stock for stock in the same corporation) or under so much of section 1031(b) as relates to section 1036(a) becomes section 306 stock and acquires, for purposes of section 306, the characteristics of the section 306 stock exchanged. The entire amount of the fair market value of the other property received in such transaction shall be considered as received upon a disposition (other than a redemption) to which section 306(a) applies. Section 306 stock ceases to be so classified if the basis of such stock is determined by reference to its fair market value on the date of the decedent-stockholder's death or the optional valuation date under section 1014.

(f) If section 306 stock which was distributed with respect to common stock is exchanged for common stock in the same corporation (whether or not such exchange is pursuant to a conversion privilege contained in section 306 stock), such common stock shall not be section 306 stock. This paragraph applies to exchanges not coming within the purview of section 306(c)(1)(B). Common stock which is convertible into stock other than common stock or into property, shall not be considered common stock. It is immaterial whether the conversion privilege is contained in the stock or in some type of collateral agreement.

(g) If there is a substantial change in the terms and conditions of any stock, then, for the purpose of this section—

(1) The fair market value of such stock shall be the fair market value at the time of distribution or the fair market value at the time of such change, whichever is higher;

(2) Such stock's ratable share of the amount which would have been a dividend if money had been distributed in lieu of stock shall be determined by reference to the time of distribution or by reference to the time of such change, whichever ratable share is higher; and

(3) Section 306(c)(2) shall be inapplicable if there would have been a dividend to any extent if money had been distributed in lieu of the stock either at the time of the distribution or at the time of such change.

(h) When section 306 stock is disposed of, the amount treated under section 306(a)(1)(A) as ordinary income, for the purposes of part I, subchapter N, chapter 1 of the Code, be treated as derived from the same source as would have been the source if money had been received from the corporation as a dividend at the time of the distribution of such stock. If the amount is determined to be derived from sources within the United States, the amount shall be considered to be fixed or determinable annual or periodic gains, profits, and income within the meaning of section 871(a) or section 881(a), relating, respectively, to the tax on nonresident alien individuals and on foreign corporations not engaged in business in the United States.

(i) Section 306 shall be inapplicable to stock received before June 22, 1954, and to stock received on or after June 22, 1954, in transactions subject to the provisions of the Internal Revenue Code of 1939.

[T.D. 6500, 25 FR 11607, Nov. 26, 1960, as amended by T.D. 7281, 38 FR 18540, July 12, 1973; T.D. 7556, 43 FR 34128, Aug. 3, 1978]

§ 1.307–1 General.

(a) If a shareholder receives stock or stock rights as a distribution on stock previously held and under section 305 such distribution is not includible in gross income then, except as provided in section 307(b) and § 1.307–2, the basis of the stock with respect to which the distribution was made shall be allocated between the old and new stocks or rights in proportion to the fair market values of each on the date of distribution. If a shareholder receives stock or stock rights as a distribution on stock previously held and pursuant to section 305 part of the distribution is not includible in gross income, then (except as provided in section 307(b) and § 1.307–2) the basis of the stock with respect to which the distribution is made shall be allocated between (1) the old stock and (2) that part of the new stock or rights which is not includible in gross income, in proportion to the fair market values of each on the date of distribution. The date of distribution in each case shall be the date the stock or the rights are distributed to the stockholder and not the record date. The general rule will apply with respect to stock rights only if such rights are exercised or sold.

(b) The application of paragraph (a) of this section is illustrated by the following example:

Example A taxpayer in 1947 purchased 100 shares of common stock at $100 per share and in 1954 by reason of the ownership of such stock acquired 100 rights entitling him to subscribe to 100 additional shares of such stock at $90 a share. Immediately after the issuance of the rights, each of the shares of stock in respect of which the rights were acquired had a fair market value, ex-rights, of $110 and the rights had a fair market value of $19 each. The basis of the rights and the common stock for the purpose of determining the basis for gain or loss on a subsequent sale or exercise of the rights or a sale of the old stock is computed as follows:

100 (shares)×$100=$10,000, cost of old stock (stock in respect of which the rights were acquired).
100 (shares)×$110=$11,000, market value of old stock.
100 (rights)×$19=$1,900, market value of rights.
11,000/12,900 of $10,000=$8,527.13, cost of old stock apportioned to such stock.
1,900/12,900 of $10,000=$1,472.87, cost of old stock apportioned to rights.

If the rights are sold, the basis for determining gain or loss will be $14.7287 per right. If the rights are exercised, the basis of the new stock acquired will be the subscription price paid therefor ($90) plus the basis of the rights exercised ($14.7287 each) or $104.7287 per share. The remaining basis of the old stock for the purpose of determining gain or loss on a subsequent sale will be $85.2713 per share.

§ 1.307–2 Exception.

The basis of rights to buy stock which are excluded from gross income under section 305(a), shall be zero if the fair market value of such rights on the date of distribution is less than 15 percent of the fair market value of the old stock on that date, unless the shareholder elects to allocate part of the basis of the old stock to the rights as provided in paragraph (a) of § 1.307–1. The election shall be made by a shareholder with respect to all the rights received by him in a particular distribution in respect of all the stock of the same class owned by him in the issuing corporation at the time of such distribution. Such election to allocate basis to rights shall be in the form of a statement attached to the shareholder's return for the year in which the rights are received. This election, once made, shall be irrevocable with respect to the rights for which the election was made. Any shareholder making such an election shall retain a copy of the election and of the tax return with which it was filed, in order to substantiate the use of an allocated basis upon a subsequent disposition of the stock acquired by exercise.

EFFECTS ON CORPORATION

§ 1.312–1 Adjustment to earnings and profits reflecting distributions by corporations.

(a) In general, on the distribution of property by a corporation with respect

to its stock, its earnings, and profits (to the extent thereof) shall be decreased by—

(1) The amount of money,

(2) The principal amount of the obligations of such corporation issued in such distribution, and

(3) The adjusted basis of other property.

For special rule with respect to distributions to which section 312(e) applies, see § 1.312–5.

(b) The adjustment provided in section 312(a)(3) and paragraph (a)(3) of this section with respect to a distribution of property (other than money or its own obligations) shall be made notwithstanding the fact that such property has appreciated or depreciated in value since acquisition.

(c) The application of paragraphs (a) and (b) of this section may be illustrated by the following examples:

Example (1). Corporation A distributes to its sole shareholder property with a value of $10,000 and a basis of $5,000. It has $12,500 in earnings and profits. The reduction in earnings and profits by reason of such distribution is $5,000. Such is the reduction even though the amount of $10,000 is includible in the income of the shareholder (other than a corporation) as a dividend.

Example (2). The facts are the same as in *Example (1)* above except that the property has a basis of $15,000 and the earnings and profits of the corporation are $20,000. The reduction in earnings and profits is $15,000. Such is the reduction even though only the amount of $10,000 is includible in the income of the shareholder as a dividend.

(d) In the case of a distribution of stock or rights to acquire stock a portion of which is includible in income by reason of section 305(b), the earnings and profits shall be reduced by the fair market value of such portion. No reduction shall be made if a distribution of stock or rights to acquire stock is not includible in income under the provisions of section 305.

(e) No adjustment shall be made in the amount of the earnings and profits of the issuing corporation upon a disposition of section 306 stock unless such disposition is a redemption.

§ 1.312–2 Distribution of inventory assets.

Section 312(b) provides for the increase and the decrease of the earnings and profits of a corporation which distributes, with respect to its stock, inventory assets as defined in section 312(b)(2), where the fair market value of such assets exceeds their adjusted basis. The rules provided in section 312(b) (relating to distributions of certain inventory assets) shall be applicable without regard to the method used in computing inventories for the purpose of the computation of taxable income. Section 312(b) does not apply to distributions described in section 312(e).

§ 1.312–3 Liabilities.

The amount of any reductions in earnings and profits described in section 312 (a) or (b) shall be (a) reduced by the amount of any liability to which the property distributed was subject and by the amount of any other liability of the corporation assumed by the shareholder in connection with such distribution, and (b) increased by the amount of gain recognized to the corporation under section 311 (b), (c), or (d), or under section 341(f), 617(d), 1245(a), 1250(a), 1251(c), 1252(a), or 1254(a).

[T.D. 7209, 37 FR 20804, Oct. 5, 1972, as amended by T.D. 8586, 60 FR 2500, Jan. 10, 1995]

§ 1.312–4 Examples of adjustments provided in section 312(c).

The adjustments provided in section 312(c) may be illustrated by the following examples:

Example (1). On December 2, 1954, Corporation X distributed to its sole shareholder, A, an individual, as a dividend in kind a vacant lot which was not an inventory asset. On that date, the lot had a fair market value of $5,000 and was subject to a mortgage of $2,000. The adjusted basis of the lot was $3,100. The amount of the earnings and profits was $10,000. The amount of the dividend received by A is $3,000 ($5,000, the fair market value, less $2,000, the amount of the mortgage) and the reduction in the earnings and profits of Corporation X is $1,100 ($3,100, the basis, less $2,000, the amount of mortgage).

Example (2). The facts are the same as in *Example (1)* above with the exception that the amount of the mortgage to which the property was subject was $4,000. The amount of the dividend received by A is $1,000, and there is no reduction in the earnings and profits of the corporation as a result of the distribution (disregarding such reduction as

may result from an increase in tax to Corporation X because, of gain resulting from the distribution). There is a gain of $900 recognized to Corporation X, the difference between the basis of the property ($3,100) and the amount of the mortgage ($4,000), under section 311(c) and an increase in earnings and profits of $900.

Example (3). Corporation A, having accumulated earnings and profits of $100,000, distributed in kind to its shareholders, not in liquidation, inventory assets which had a basis to it on the ''Lifo'' method (section 472) of $46,000 and on the basis of cost or market (section 471) of $50,000. The inventory had a fair market value of $55,000 and was subject to a liability of $35,000. This distribution results in a net decrease in earnings and profits of Corporation A of $11,000, (without regard to any tax on Corporation A) computed as follows:

''Fifo'' basis of inventory	$50,000	
Less: ''Lifo'' basis of inventory	46,000	
Gain recognized—addition to earnings and profits (section 311(b))		$4,000
Adjustment to earnings and profits required by section 312(b)(1)(A):		
Fair market value of inventory	$55,000	
Less: ''Lifo'' basis plus adjustment under section 311(b)	50,000	5,000
Total increase in earnings and profits		9,000
Decrease in earnings and profits—under section 312(b)(1)(B)(i)	$55,000	
Less: Liability assumed	35,000	
Net amount of distribution (decrease in earnings)		20,000
Net decrease in earnings and profits		11,000

§ 1.312–5 Special rule for partial liquidations and certain redemptions.

The part of the distribution properly chargeable to capital account within the provisions of section 312(e) shall not be considered a distribution of earnings and profits within the meaning of section 301 for the purpose of determining taxability of subsequent distributions by the corporation.

§ 1.312–6 Earnings and profits.

(a) In determining the amount of earnings and profits (whether of the taxable year, or accumulated since February 28, 1913, or accumulated before March 1, 1913) due consideration must be given to the facts, and, while mere bookkeeping entries increasing or decreasing surplus will not be conclusive, the amount of the earnings and profits in any case will be dependent upon the method of accounting properly employed in computing taxable income (or net income, as the case may be). For instance, a corporation keeping its books and filing its income tax returns under subchapter E, chapter 1 of the Code, on the cash receipts and disbursements basis may not use the accrual basis in determining earnings and profits; a corporation computing income on the installment basis as provided in section 453 shall, with respect to the installment transactions, compute earnings and profits on such basis; and an insurance company subject to taxation under section 831 shall exclude from earnings and profits that portion of any premium which is unearned under the provisions of section 832(b)(4) and which is segregated accordingly in the unearned premium reserve.

(b) Among the items entering into the computation of corporate earnings and profits for a particular period are all income exempted by statute, income not taxable by the Federal Government under the Constitution, as well as all items includible in gross income under section 61 or corresponding provisions of prior revenue acts. Gains and losses within the purview of section 1002 or corresponding provisions of prior revenue acts are brought into the earnings and profits at the time and to the extent such gains and losses are recognized under that section. Interest on State bonds and certain other obligations, although not taxable when received by a corporation, is taxable to the same extent as other dividends when distributed to shareholders in the form of dividends.

(c)(1) In the case of a corporation in which depletion or depreciation is a factor in the determination of income, the only depletion or depreciation deductions to be considered in the computation of the total earnings and profits are those based on cost or other basis without regard to March 1, 1913, value. In computing the earnings and profits for any period beginning after February 28, 1913, the only depletion or depreciation deductions to be considered are those based on (i) cost or other basis, if the depletable or depreciable asset was acquired subsequent to February 28, 1913, or (ii) adjusted cost or March 1, 1913, value, whichever is higher, if acquired before March 1, 1913.

Thus, discovery or percentage depletion under all revenue acts for mines and oil and gas wells is not to be taken into consideration in computing the earnings and profits of a corporation. Similarly, where the basis of property in the hands of a corporation is a substituted basis, such basis, and not the fair market value of the property at the time of the acquisition by the corporation, is the basis for computing depletion and depreciation for the purpose of determining earnings and profits of the corporation.

(2) The application of subparagraph (1) of this paragraph may be illustrated by the following example:

Example Oil producing property which A had acquired in 1949 at a cost of $28,000 was transferred to Corporation Y in December 1951, in exchange for all of its capital stock. The fair market value of the stock and of the property as of the date of the transfer was $247,000. Corporation Y, after four years' operation, effected in 1955 a cash distribution to A in the amount of $165,000. In determining the extent to which the earnings and profits of Corporation Y available for dividend distributions have been increased as the result of production and sale of oil, the depletion to be taken into account is to be computed upon the basis of $28,000 established in the nontaxable exchange in 1951 regardless of the fair market value of the property or of the stock issued in exchange therefor.

(d) A loss sustained for a year before the taxable year does not affect the earnings and profits of the taxable year. However, in determining the earnings and profits accumulated since February 28, 1913, the excess of a loss sustained for a year subsequent to February 28, 1913, over the undistributed earnings and profits accumulated since February 28, 1913, and before the year for which the loss was sustained, reduces surplus as of March 1, 1913, to the extent of such excess. If the surplus as of March 1, 1913, was sufficient to absorb such excess, distributions to shareholders after the year of the loss are out of earnings and profits accumulated since the year of the loss to the extent of such earnings.

(e) With respect to the effect on the earnings and profits accumulated since February 28, 1913, of distributions made on or after January 1, 1916, and before August 6, 1917, out of earnings or profits accumulated before March 1, 1913, which distributions were specifically declared to be out of earnings and profits accumulated before March 1, 1913, see section 31(b) of the Revenue Act of 1916, as added by section 1211 of the Revenue Act of 1917 (40 Stat. 336).

§ 1.312–7 Effect on earnings and profits of gain or loss realized after February 28, 1913.

(a) In order to determine the effect on earnings and profits of gain or loss realized from the sale or other disposition (after February 28, 1913) of property by a corporation, section 312(f)(1) prescribed certain rules for—

(1) The computation of the total earnings and profits of the corporation of most frequent application in determining invested capital; and

(2) The computation of earnings and profits of the corporation for any period beginning after February 28, 1913, of most frequent application in determining the source of dividend distributions.

Such rules are applicable whenever under any provision of subtitle A of the Code it is necessary to compute either the total earnings and profits of the corporation or the earnings and profits for any period beginning after February 28, 1913. For example, since the earnings and profits accumulated after February 28, 1913, or the earnings and profits of the taxable year, are earnings and profits for a period beginning after February 28, 1913, the determination of either must be in accordance with the regulations prescribed by this section for the ascertainment of earnings and profits for any period beginning after February 28, 1913. Under subparagraph (1) of this paragraph, such gain or loss is determined by using the adjusted basis (under the law applicable to the year in which the sale or other disposition was made) for determining gain, but disregarding value as of March 1, 1913. Under subparagraph (2) of this paragraph, there is used such adjusted basis for determining gain, giving effect to the value as of March 1, 1913, whenever applicable. In both cases the rules are the same as those governing depreciation and depletion in computing earnings and profits (see § 1.312–6). Under both subparagraphs (1) and (2)

of this paragraph, the adjusted basis is subject to the limitations of the third sentence of section 312(f)(1) requiring the use of adjustments proper in determining earnings and profits. The proper adjustments may differ under section 312(f)(1)(A) and (B) depending upon the basis to which the adjustments are to be made. If the application of section 312(f)(1)(B) results in a loss and if the application of section 312(f)(1)(A) to the same transaction reaches a different result, then the loss under section 312(f)(1)(B) will be subject to the adjustment thereto required by section 312(g)(2). (See § 1.312–9.)

(b)(1) The gain or loss so realized increases or decreases the earnings and profits to, but not beyond, the extent to which such gain or loss was recognized in computing taxable income (or net income, as the case may be) under the law applicable to the year in which such sale or disposition was made. As used in this paragraph, the term ''recognized'' has reference to that kind of realized gain or loss which is recognized for income tax purposes by the statute applicable to the year in which the gain or loss was realized. For example, see section 356. A loss (other than a wash sale loss with respect to which a deduction is disallowed under the provisions of section 1091 or corresponding provisions of prior revenue laws) may be recognized though not allowed as a deduction (by reason, for example, of the operation of sections 267 and 1211 and corresponding provisions of prior revenue laws) but the mere fact that it is not allowed does not prevent decrease in earnings and profits by the amount of such disallowed loss. Wash sale losses, however, disallowed under section 1091 and corresponding provisions of prior revenue laws, are deemed nonrecognized losses and do not reduce earnings or profits. The *recognized* gain or loss for the purpose of computing earnings and profits is determined by applying the recognition provisions to the realized gain or loss computed under the provisions of section 312(f)(1) as distinguished from the realized gain or loss used in computing taxable income (or net income, as the case may be).

(2) The application of subparagraph (1) of this paragraph may be illustrated by the following examples:

Example (1). Corporation X on January 1, 1952, owned stock in Corporation Y which it had acquired from Corporation Y in December 1951, in an exchange transaction in which no gain or loss was recognized. The adjusted basis to Corporation X of the property exchanged by it for the stock in Corporation Y was $30,000. The fair market value of the stock in Corporation Y when received by Corporation X was $930,000. On April 9, 1955, Corporation X made a cash distribution of $900,000 and, except for the possible effect of the transaction in 1951, had no earnings or profits accumulated after February 28, 1913, and had no earnings or profits for the taxable year. The amount of $900,000 representing the excess of the fair market value of the stock of Corporation Y over the adjusted basis of the property exchanged therefor was not recognized gain to Corporation X under the provisions of section 112 of the Internal Revenue Code of 1939. Accordingly, the earnings and profits of Corporation X are not increased by $900,000, the amount of the gain realized but not recognized in the exchange, and the distribution was not a taxable dividend. The basis in the hands of Corporation Y of the property acquired by it from Corporation X is $30,000. If such property is thereafter sold by Corporation Y, gain or loss will be computed on such basis of $30,000, and earnings and profits will be increased or decreased accordingly.

Example (2). On January 2, 1910, Corporation M acquired nondepreciable property at a cost of $1,000. On March 1, 1913, the fair market value of such property in the hands of Corporation M was $2,200. On December 31, 1952, Corporation M transfers such property to Corporation N in exchange for $1,900 in cash and all Corporation N's stock, which has a fair market value of $1,100. For the purpose of computing the total earnings and profits of Corporation M, the gain on such transaction is $2,000 (the sum of $1,900 in cash and stock worth $1,100 minus $1,000, the adjusted basis for computing gain, determined without regard to March 1, 1913, value), $1,900 of which is recognized under section 356, since this was the amount of money received, although for the purpose of computing net income the gain is only $800 (the sum of $1,900 in cash and stock worth $1,100, minus $2,200, the adjusted basis for computing gain determined by giving effect to March 1, 1913, value). Such earnings and profits will therefore be increased by only $800 as a reputing the earnings and profits of Corporation M for any period beginning after February 28, 1913, however, the gain arising from the transaction, like the taxable gain, is only $800, all of which is recognized under section 112(c) of the Internal Revenue Code

of 1939, the money received being in excess of such amount. Such earnings and profits will therefore be increased by only $800 as a result of the transaction. For increase in that part of the earnings and profits consisting of increase in value of property accrued before, but realized on or after March 1, 1913, see § 1.312–9.

Example (3). On July 31, 1955, Corporation R owned oil-producing property acquired after February 28, 1913, at a cost of $200,000, but having an adjusted basis (by reason of taking percentage depletion) of $100,000 for determining gain. However, the adjusted basis of such property to be used in computing gain or loss for the purpose of earnings and profits is, because of the provisions of the third sentence of section 312(f)(1), $150,000. On such day Corporation R transferred such property to Corporation S in exchange for $25,000 in cash and all of the stock of Corporation S, which had a fair market value of $100,000. For the purpose of computing taxable income, Corporation R has realized a gain of $25,000 as a result of this transaction, all of which is recognized under section 356. For the purpose of computing earnings and profits, however, Corporation R has realized a loss of $25,000, none of which is recognized owing to the provisions of section 356(c). The earnings and profits of Corporation R are therefore neither increased nor decreased as a result of the transaction. The adjusted basis of the Corporation S stock in the hands of Corporation R for purposes of computing earnings and profits, however, will be $125,000 (though only $100,000 for the purpose of computing taxable income), computed as follows:

Basis of property transferred	$200,000
Less money received on exchange	25,000
Plus gain or minus loss recognized on exchange	None
Basis of stock	175,000
Less adjustments (same as those used in determining adjusted basis of property transferred)	50,000
Adjusted basis of stock	125,000

If, therefore, Corporation R should subsequently sell the Corporation S stock for $100,000, a loss of $25,000 will again be realized for the purpose of computing earnings and profits, all of which will be recognized and will be applied to decrease the earnings and profits of Corporation R.

(c)(1) The third sentence of section 312(f)(1) provides for cases in which the adjustments, prescribed in section 1016, to the basis indicated in section 312(f)(1)(A) or (B), as the case may be, differ from the adjustments to such basis proper for the purpose of determining earnings or profits. The adjustments provided by such third sentence reflect the treatment provided by §§ 1.312–6 and 1.312–15 relative to cases where the deductions for depletion and depreciation in computing taxable income (or net income, as the case may be) differ from the deductions proper for the purpose of computing earnings and profits.

(2) The effect of the third sentence of section 312(f)(1) may be illustrated by the following examples:

Example (1). Corporation X purchased on January 2, 1931, an oil lease at a cost of $10,000. The lease was operated only for the years 1931 and 1932. The deduction for depletion in each of the years 1931 and 1932 amounted to $2,750, of which amount $1,750 represented percentage depletion in excess of depletion based on cost. The lease was sold in 1955 for $15,000. Under section 1016(a)(2), in determining the gain or loss from the sale of the property, the basis must be adjusted for cost depletion of $1,000 in 1931 and percentage depletion of $2,750 in 1932. However, the adjustment of such basis, proper for the determination of earnings and profits, is $1,000 for each year, or $2,000. Hence, the cost is to be adjusted only to the extent of $2,000, leaving an adjusted basis of $8,000 and the earnings and profits will be increased by $7,000, and not by $8,750. The difference of $1,750 is equal to the amount by which the percentage depletion for the year 1932 ($2,750) exceeds the depletion on cost for that year ($1,000) and has already been applied in the computation of earnings and profits for the year 1932 by taking into account only $1,000 instead of $2,750 for depletion in the computation of such earnings and profits. (See § 1.316–1.)

Example (2). If, in *Example (1),* above, the property, instead of being sold, is exchanged in a transaction described in section 1031 for like property having a fair market value of $7,750 and cash of $7,250, then the increase in earnings and profits amounts to $7,000, that is, $15,000 ($7,750 plus $7,250) minus the basis of $8,000. However, in computing taxable income of Corporation X, the gain is $8,750, that is, $15,000 minus $6,250 ($10,000 less depletion of $3,750), of which only $7,250 is recognized because the recognized gain cannot exceed the sum of money received in the transaction. See section 1031(b) and the corresponding provisions of prior revenue laws. If, however, the cash received was only $2,250 and the value of the property received was $12,750, then the increase in earnings and profits would be $2,250, that amount being the gain recognized under section 1031.

Example (3). On January 1, 1973, corporation X purchased for $10,000 a depreciable asset with an estimated useful life of 20 years and no salvage value. In computing depreciation on the asset, corporation X used the declining balance method with a rate twice the straight line rate. On December 31, 1976, the

asset was sold for $9,000. Under section 1016(a)(2), the basis of the asset is adjusted for depreciation allowed for the years 1973 through 1976, or a total of $3,439. Thus, X realizes a gain of $2,439 (the excess of the amount realized, $9,000, over the adjusted basis, $6,561). However, the proper adjustment to basis for the purpose of determining earnings and profits is only $2,000, i.e., the total amount which, under § 1.312–15, was applied in the computation of earnings and profits for the years 1973–76. Hence, upon sale of the asset, earnings and profits are increased by only $1,000, i.e., the excess of the amount realized, $9,000, over the adjusted basis for earnings and profits purposes, $8,000.

(d) For adjustment and allocation of the earnings and profits of the transferor as between the transferor and the transferee in cases where the transfer of property by one corporation to another corporation results in the nonrecognition in whole or in part of gain or loss, see § 1.312–10; and see section 381 for earnings and profits of successor corporations in certain transactions.

[T.D. 6500, 25 FR 11607, Nov. 26, 1960, as amended by T.D. 7221, 37 FR 24746, Nov. 21, 1972]

§ 1.312–8 Effect on earnings and profits of receipt of tax-free distributions requiring adjustment or allocation of basis of stock.

(a) In order to determine the effect on earnings and profits, where a corporation receives (after February 28, 1913) from a second corporation a distribution which (under the law applicable to the year in which the distribution was made) was not a taxable dividend to the shareholders of the second corporation, section 312(f) prescribes certain rules. It provides that the amount of such distribution shall not increase the earnings and profits of the first or receiving corporation in the following cases: (1) No such increase shall be made in respect of the part of such distribution which (under the law applicable to the year in which the distribution was made) is directly applied in reduction of the basis of the stock in respect of which the distribution was made and (2) no such increase shall be made if (under the law applicable to the year in which the distribution was made) the distribution causes the basis of the stock in respect of which the distribution was made to be allocated between such stock and the property received (or such basis would but for section 307(b) be so allocated). Where, therefore, the law (applicable to the year in which the distribution was made, as, for example, a distribution in 1934 from earnings and profits accumulated before March 1, 1913) requires that the amount of such distribution shall be applied against and reduce the basis of the stock with respect to which the distribution was made, there is no increase in the earnings and profits by reason of the receipt of such distribution. Similarly, where there is received by a corporation a distribution from another corporation in the form of a stock dividend and the law applicable to the year in which such distribution was made requires the allocation, as between the old stock and the stock received as a dividend, of the basis of the old stock (or such basis would but for section 307(b) be so allocated), then there is no increase in the earnings and profits by reason of the receipt of such stock dividend even though such stock dividend constitutes income within the meaning of the sixteenth amendment to the Constitution.

(b) The principles set forth in paragraph (a) of this section may be illustrated by the following examples:

Example (1). Corporation X in 1955 distributed to Corporation Y, one of its shareholders, $10,000 which was out of earnings or profits accumulated before March 1, 1913, and did not exceed the adjusted basis of the stock in respect of which the distribution was made. This amount of $10,000 was, therefore, a tax-free distribution and under the provisions of section 301(c)(2) must be applied against and reduce the adjusted basis of the stock in respect of which the distribution was made. The earnings and profits of Corporation Y are not increased by reason of the receipt of this distribution.

Example (2). Corporation Z in 1955 had outstanding common and preferred stock of which Corporation Y held 100 shares of the common and no preferred. The stock had a cost basis to Corporation Y of $100 per share, or a total cost of $10,000. In December of that year it received a dividend of 100 shares of the preferred stock of Corporation Z. Such distribution is a stock dividend which, under section 305, was not taxable and was accordingly not included in the gross income of Corporation Y. The original cost of $10,000 is allocated to the 200 shares of Corporation Z none of which has been sold or otherwise disposed of by Corporation Y. See section 307

and § 1.307–1. The earnings and profits of Corporation Y are not increased by reason of the receipt of such stock dividend.

§ 1.312–9 Adjustments to earnings and profits reflecting increase in value accrued before March 1, 1913.

(a) In order to determine, for the purpose of ascertaining the source of dividend distributions, that part of the earnings and profits which is represented by increase in value of property accrued before, but realized on or after, March 1, 1913, section 312(g) prescribes certain rules.

(b)(1) Section 312(g)(1) sets forth the general rule with respect to computing the increase to be made in that part of the earnings and profits consisting of increase in value of property accrued before, but realized on or after, March 1, 1913.

(2) The effect of section 312(g)(1) may be illustrated by the following examples:

Example (1). Corporation X acquired nondepreciable property before March 1, 1913, at a cost of $10,000. Its fair market value as of March 1, 1913, was $12,000 and it was sold in 1955 for $15,000. The increase in earnings and profits based on the value as of March 1, 1913, representing earnings and profits accumulated since February 28, 1913, is $3,000. If the basis is determined without regard to the value as of March 1, 1913, there would be an increase in earnings and profits of $5,000. The difference of $2,000 ($5,000 minus $3,000) represents the increase to be made in that part of the earnings and profits of Corporation X consisting of the increase in value of property accrued before, but realized on or after, March 1, 1913.

Example (2). Corporation Y acquired depreciable property in 1908 at a cost of $100,000. Assuming no additions or betterments, and that the depreciation sustained before March 1, 1913, was $10,000, the adjusted cost as of that date was $90,000. Its fair market value as of March 1, 1913, was $94,000 and on February 28, 1955, it was sold for $25,000. For the purpose of determining gain from the sale, the basis of the property is the fair market value of $94,000 as of March 1, 1913, adjusted for depreciation for the period subsequent to February 28, 1913, computed on such fair market value. If the amount of the depreciation deduction allowed after February 28, 1913, and properly allowable for each of such years to the date of the sale in 1955 is the aggregate sum of $81,467, the adjusted basis for determining gain in 1955 ($94,000 less $81,467) is $12,533 and the gain would be $12,467 ($25,000 less $12,533). The increase in earnings and profits accumulated since February 28, 1913, by reason of the sale, based on the value as of March 1, 1913, adjusted for depreciation is $12,467. If the depreciation since February 28, 1913, had been based on the adjusted cost of $90,000 ($100,000 less $10,000) instead of the March 1, 1913, value of $94,000, the depreciation sustained from that date to the date of sale would have been $78,000 instead of $81,467 and the actual gain on the sale based on the cost of $100,000 adjusted by depreciation on such cost to $12,000 ($100,000 reduced by the sum of $10,000 and $78,000) would be $13,000 ($25,000 less $12,000). If the adjusted basis of the property was determined without regard to the value as of March 1, 1913, there would be an increase in earnings and profits of $13,000. The difference of $533 ($13,000 minus $12,467) represents the increase to be made in that part of the earnings and profits of Corporation Y consisting of the increase in value of property accrued before, but realized on or after, March 1, 1913 (assuming that the proper increase in such surplus had been made each year for the difference between depreciation based on cost and the depreciation based on March 1, 1913, value). Thus, the total increase in that part of earnings and profits consisting of the increase in value of property accrued before, but realized on or after, March 1, 1913, is $4,000 ($94,000 less $90,000).

(c)(1) Section 312(g)(2) is an exception to the general rule in section 312(g)(1) and also operates as a limitation on the application of section 312(f). It provides that, if the application of section 312(f)(1)(B) to a sale or other disposition after February 28, 1913, results in a loss which is to be applied in decrease of earnings and profits for any period beginning after February 28, 1913, then, notwithstanding section 312(f) and in lieu of the rule provided in section 312(g)(1), the amount of such loss so to be applied shall be reduced by the amount, if any, by which the adjusted basis of the property used in determining the loss, exceeds the adjusted basis computed without regard to the fair market value of the property on March 1, 1913. If the amount so applied in reduction of the loss exceeds such loss, the excess over such loss shall increase that part of the earnings and profits consisting of increase in value of property accrued before, but realized on or after March 1, 1913.

(2) The application of section 312(g)(2) may be illustrated by the following examples:

Example (1). Corporation Y acquired nondepreciable property before March 1, 1913, at a cost of $8,000. Its fair market value as of March 1, 1913, was $13,000, and it was sold in 1955 for $10,000. Under section 312(f)(1)(B) the adjusted basis would be $13,000 and there would be a loss of $3,000. The application of section 312(f)(1)(B) would result in a loss from the sale in 1955 to be applied in decrease of earnings and profits for that year. Section 312(g)(2), however, applies and the loss of $3,000 is reduced by the amount by which the adjusted basis of $13,000 exceeds the cost of $8,000 (the adjusted basis computed without regard to the value on March 1, 1913), namely $5,000. The amount of the loss is, accordingly, reduced from $3,000 to zero and there is no decrease in earnings and profits of Corporation Y for the year 1955 as a result of the sale. The amount applied in reduction of the decrease, namely, $5,000, exceeds $3,000. Accordingly, as a result of the sale the excess of $2,000 increases that part of the earnings and profits of Corporation Y consisting of increase in value of property accrued before, but realized on or after March 1, 1913.

Example (2). Corporation Z acquired nondepreciable property before March 1, 1913, at a cost of $10,000. Its fair market value as of March 1, 1913, was $12,000, and it was sold in 1955 for $8,000. Under section 312(f)(1)(B) the adjusted basis would be $12,000 and there would be a loss of $4,000. The application of section 312(f)(1)(B) would result in a loss from the sale in 1955 to be applied in decrease of earnings and profits for that year. Section 312(g)(2), however, applies and the loss of $4,000 is reduced by the amount by which the adjusted basis of $12,000 exceeds the cost of $10,000 (the adjusted basis computed without regard to the value on March 1, 1913), namely, $2,000. The amount of the loss is, accordingly, reduced from $4,000 to $2,000 and the decrease in earnings and profits of Corporation Z for the year 1955 as a result of the sale is $2,000 instead of $4,000. The amount applied in reduction of the decrease, namely, $2,000, does not exceed $4,000. Accordingly, as a result of the sale there is no increase in that part of the earnings and profits of Corporation Z consisting of increase in value of property accrued before, but realized on or after, March 1, 1913.

§ 1.312–10 Allocation of earnings in certain corporate separations.

(a) If one corporation transfers part of its assets constituting an active trade or business to another corporation in a transaction to which section 368(a)(1)(4) applies and immediately thereafter the stock and securities of the controlled corporation are distributed in a distribution or exchange to which section 355 (or so much of section 356 as relates to section 355) applies, the earnings and profits of the distributing corporation immediately before the transaction shall be allocated between the distributing corporation and the controlled corporation. In the case of a newly created controlled corporation, such allocation generally shall be made in proportion to the fair market value of the business or businesses (and interests in any other properties) retained by the distributing corporation and the business or businesses (and interests in any other properties) of the controlled corporation immediately after the transaction. In a proper case, allocation shall be made between the distributing corporation and the controlled corporation in proportion to the net basis of the assets transferred and of the assets retained or by such other method as may be appropriate under the facts and circumstances of the case. The term *net basis* means the basis of the assets less liabilities assumed or liabilities to which such assets are subject. The part of the earnings and profits of the taxable year of the distributing corporation in which the transaction occurs allocable to the controlled corporation shall be included in the computation of the earnings and profits of the first taxable year of the controlled corporation ending after the date of the transaction.

(b) If a distribution or exchange to which section 355 applies (or so much of section 356 as relates to section 355) is not in pursuance of a plan meeting the requirements of a reorganization as defined in section 368(a)(1)(D), the earnings and profits of the distributing corporation shall be decreased by the lesser of the following amounts:

(1) The amount by which the earnings and profits of the distributing corporation would have been decreased if it had transferred the stock of the controlled corporation to a new corporation in a reorganization to which section 368(a)(1)(D) applied and immediately thereafter distributed the stock of such new corporation or,

(2) The net worth of the controlled corporation. (For this purpose the term *net worth* means the sum of the basis of all of the properties plus cash minus all liabilities.)

If the earnings and profits of the controlled corporation immediately before the transaction are less than the amount of the decrease in earnings and profits of the distributing corporation (including a case in which the controlled corporation has a deficit) the earnings and profits of the controlled corporation, after the transaction, shall be equal to the amount of such decrease. If the earnings and profits of the controlled corporation immediately before the transaction are more than the amount of the decrease in the earnings and profits of the distributing corporation, they shall remain unchanged.

(c) In no case shall any part of a deficit of a distributing corporation within the meaning of section 355 be allocated to a controlled corporation.

§ 1.312–11 Effect on earnings and profits of certain other tax-free exchanges, tax-free distributions, and tax-free transfers from one corporation to another.

(a) If property is transferred by one corporation to another, and, under the law applicable to the year in which the transfer was made, no gain or loss was recognized (or was recognized only to the extent of the property received other than that permitted by such law to be received without the recognition of gain), then proper adjustment and allocation of the earnings and profits of the transferor shall be made as between the transferor and the transferee. Transfers to which the preceding sentence applies include contributions to capital, transfers under section 351, transfers in connection with reorganizations under section 368, transfers in liquidations under section 332 and intercompany transfers during a period of affiliation. However, if, for example, property is transferred from one corporation to another in a transaction under section 351 or as a contribution to capital and the transfer is not followed or preceded by a reorganization, a transaction under section 302(a) involving a substantial part of the transferor's stock, or a total or partial liquidation, then ordinarily no allocation of the earnings and profits of the transferor shall be made. For specific rules as to allocation of earnings and profits in certain reorganizations under section 368 and in certain liquidations under section 332 see section 381 and the regulations thereunder. For allocation of earnings and profits in certain corporate separations see section 312(i) and § 1.312–10.

(b) The general rule provided in section 316 that every distribution is made out of earnings or profits to the extent thereof and from the most recently accumulated earnings or profits does not apply to:

(1) The distribution, in pursuance of a plan of reorganization, by or on behalf of a corporation a party to the reorganization, or in a transaction subject to section 355, to its shareholders—

(i) Of stock or securities in such corporation or in another corporation a party to the reorganization in any taxable year beginning before January 1, 1934, without the surrender by the distributees of stock or securities in such corporation (see section 112(g) of the Revenue Act of 1932 (47 Stat. 197)); or

(ii) Of stock (other than preferred stock) in another corporation which is a party to the reorganization without the surrender by the distributees of stock in the distributing corporation if the distribution occurs after October 20, 1951, and is subject to section 112(b)(11) of the Internal Revenue Code of 1939; or

(iii) Of stock or securities in such corporation or in another corporation a party to the reorganization in any taxable year beginning before January 1, 1939, or on or after such date, in exchange for its stock or securities in a transaction to which section 112(b)(3) of the Internal Revenue Code of 1939 was applicable; or

(iv) Of stock or securities in such corporation or in another corporation in exchange for its stock or securities in a transaction subject to section 354 or 355,

if no gain to the distributees from the receipt of such stock or securities was recognized by law.

(2) The distribution in any taxable year (beginning before January 1, 1939, or on or after such date) of stock or securities, or other property or money, to a corporation in complete liquidation of another corporation, under the circumstances described in section

112(b)(6) of the Revenue Act of 1936 (49 Stat. 1679), the Revenue Act of 1938 (52 Stat. 485), of the Internal Revenue Code of 1939, or section 332 of the Internal Revenue Code of 1954.

(3) The distribution in any taxable year (beginning after December 31, 1938), of stock or securities, or other property or money, in the case of an exchange or distribution described in section 371 of the Internal Revenue Code of 1939 or in section 1081 of the Internal Revenue Code of 1954 (relating to exchanges and distributions in obedience to orders of the Securities and Exchange Commission), if no gain to the distributee from the receipt of such stock, securities, or other property or money was recognized by law.

(4) A stock dividend which was not subject to tax in the hands of the distributee because either it did not constitute income to him within the meaning of the sixteenth amendment to the Constitution or because exempt to him under section 115(f) of the Revenue Act of 1934 (48 Stat. 712) or a corresponding provision of a prior Revenue Act, or section 305 of the Code.

(5) The distribution, in a taxable year of the distributee beginning after December 31, 1931, by or on behalf of an insolvent corporation, in connection with a section 112(b)(10) reorganization under the Internal Revenue Code of 1939, or in a transaction subject to section 371 of the Internal Revenue Code of 1954, of stock or securities in a corporation organized or made use of to effectuate the plan of reorganization, if under section 112(e) of the Internal Revenue Code of 1939 or section 371 of the Internal Revenue Code of 1954 no gain to the distributee from the receipt of such stock or securities was recognized by law.

(c) A distribution described in paragraph (b) of this section does not diminish the earnings or profits of any corporation. In such cases, the earnings or profits remain intact and available for distribution as dividends by the corporation making such distribution, or by another corporation to which the earnings or profits are transferred upon such reorganization or other exchange. In the case, however, of amounts distributed in liquidation (other than a taxfree liquidation or reorganization described in paragraph (b)(1), (2), (3), or (5) of this section) the earnings or profits of the corporation making the distribution are diminished by the portion of such distribution properly chargeable to earnings or profits accumulated after February 28, 1913, after first deducting from the amount of such distribution the portion thereof allocable to capital account.

(d) For the purposes of this section, the terms *reorganization* and *party to the reorganization* shall, for any taxable year beginning before January 1, 1934, have the meanings assigned to such terms in section 112 of the Revenue Act of 1932 (47 Stat. 196); for any taxable year beginning after December 31, 1933, and before January 1, 1936, have the meanings assigned to such terms in section 112 of the Revenue Act of 1934 (48 Stat. 704); for any taxable year beginning after December 31, 1935, and before January 1, 1938, have the meanings assigned to such terms in section 112 of the Revenue Act of 1936 (49 Stat. 1678); for any taxable year beginning after December 31, 1937, and before January 1, 1939, have the meanings assigned to such terms in section 112 of the Revenue Act of 1938 (52 Stat. 485); and for any taxable year beginning after December 31, 1938, and ending before June 22, 1954, providing no election is made under section 393(b)(2) of the Internal Revenue Code of 1954, have the meanings assigned to such terms in section 112(g)(1) of the Internal Revenue Code of 1939.

§ 1.312–12 Distributions of proceeds of loans guaranteed by the United States.

(a) The provisions of section 312(j) are applicable with respect to a loan, any portion of which is guaranteed by an agency of the United States Government without regard to the percentage of such loan subject to such guarantee.

(b) The application of section 312(j) is illustrated by the following example:

Example. Corporation A borrowed $1,000,000 for the purpose of construction of an apartment house, the cost and adjusted basis of which was $900,000. This loan was guaranteed by an agency of the United States Government. One year after such loan was made and after the completion of construction of the

building (but before such corporation had received any income) it distributed $100,000 cash to its shareholders. The earnings and profits of the taxable year of such corporation are increased (pursuant to section 312(j)) by $100,000 immediately prior to such distribution and are decreased by $100,000 immediately after such distribution. Such decrease, however, does not reduce the earnings and profits below zero. Two years later, it has no accumulated earnings and has earnings of the taxable year of $100,000. Before it has made any payments on the loan, it distributes $200,000 to its shareholders. The earnings and profits of the taxable year of the corporation ($100,000) are increased by $100,000, the excess of the amount of the guaranteed loan over the adjusted basis of the apartment house (calculated without adjustment for depreciation). The entire amount of each distribution is treated as a distribution out of earnings and profits and, accordingly, as a taxable dividend.

§ 1.312–15 Effect of depreciation on earnings and profits.

(a) *Depreciation for taxable years beginning after June 30, 1972*—(1) *In general.* Except as provided in subparagraph (2) of this paragraph and paragraph (c) of this section, for purposes of computing the earnings and profits of a corporation (including a real estate investment trust as defined in section 856) for any taxable year beginning after June 30, 1972, the allowance for depreciation (and amortization, if any) shall be deemed to be the amount which would be allowable for such year if the straight line method of depreciation had been used for all property for which depreciation is allowable for each taxable year beginning after June 30, 1972. Thus, for taxable years beginning after June 30, 1972, in determining the earnings and profits of a corporation, depreciation must be computed under the straight line method, notwithstanding that in determining taxable income the corporation uses an accelerated method of depreciation described in subparagraph (A), (B), or (C) of section 312(m)(2) or elects to amortize the basis of property under section 169, 184, 187, or 188, or any similar provision.

(2) *Exception.* (i) If, for any taxable year beginning after June 30, 1972, a method of depreciation is used by a corporation in computing taxable income which the Secretary or his delegate has determined results in a reasonable allowance under section 167(a) and which is not a declining balance method of depreciation (described in § 1.167(b)–2), the sum of the years-digits method (described in § 1.167(b)–3), or any other method allowed solely by reason of the application of subsection (b)(4) or (j)(1)(C) of section 167, then the adjustment to earnings and profits for depreciation for such year shall be determined under the method so used (in lieu of the straight line method).

(ii) The Commissioner has determined that the ''unit of production'' (see §1.167(b)–0(b)), and the ''machine hour'' methods of depreciation, when properly used under appropriate circumstances, meet the requirements of subdivision (i) of this subparagraph. Thus, the adjustment to earnings and profits for depreciation (for the taxable year for which either of such methods is properly used under appropriate circumstances) shall be determined under whichever of such methods is used to compute taxable income.

(3) *Determinations under straight line method.* (i) In the case of property with respect to which an allowance for depreciation is claimed in computing taxable income, the determination of the amount which would be allowable under the straight line method shall be based on the manner in which the corporation computes depreciation in determining taxable income. Thus, if an election under § 1.167(a)–11 is in effect with respect to the property, the amount of depreciation which would be allowable under the straight line method shall be determined under § 1.167(a)–11(g)(3). On the other hand, if property is not depreciated under the provisions of § 1.167(a)–11, the amount of depreciation which would be allowable under the straight line method shall be determined under § 1.167(b)–1. Any election made under section 167(f), with respect to reducing the amount of salvage value taken into account in computing the depreciation allowance for certain property, or any convention adopted under § 1.167(a)–10(b) or § 1.167(a)–11(c)(2), with respect to additions and retirements from multiple asset accounts, which is used in computing depreciation for taxable income shall be used in computing depreciation for earnings and profits purposes.

(ii) In the case of property with respect to which an election to amortize is in effect under section 169, 184, 187, or 188, or any similar provision, the amount which would be allowable under the straight line method of depreciation shall be determined under the provisions of § 1.167(b)–1. Thus, the cost or other basis of the property, less its estimated salvage value, is to be deducted in equal annual amounts over the period of the estimated useful life of the property. In computing the amount of depreciation for earnings and profits purposes, a taxpayer may utilize the provisions of section 167(f) (relating to the reduction in the amount of salvage value taken into account in computing the depreciation allowance for certain property) and any convention which could have been adopted for such property under § 1.167(a)–10(b) (relating to additions and retirements from multiple asset accounts).

(b) *Transitional rules*—(1) *Depreciation*. If, for the taxable year which includes June 30, 1972, (i) the allowance for depreciation of any property is computed under a method other than the straight line method or a method described in paragraph (a)(2) of this section, and (ii) paragraph (a)(1) of this section applies to such property for the first taxable year beginning after June 30, 1972, then adjustments to earnings and profits for depreciation of such property for taxable years beginning after June 30, 1972, shall be determined as if the corporation changed to the straight line method with respect to such property as of the first day of the first taxable year beginning after June 30, 1972. Thus, if an election under § 1.167 (a)–11 is in effect with respect to the property, the change shall be made under the provisions of § 1.167(a)–11(c)(1)(iii), except that no statement setting forth the vintage accounts for which the change is made shall be furnished with the income tax return of the year of change if the change is only for purposes of computing earnings and profits. In all other cases, the unrecovered cost or other basis of the property (less a reasonable estimate for salvage) as of such first day shall be recovered through equal annual allowances over the estimated remaining useful life determined in accordance with the circumstances existing at that time. See paragraph (a)(3)(i) of this section for rules relating to the applicability of section 167(f) in determining salvage value.

(2) *Amortization*. If, for the taxable year which includes June 30, 1972, the basis of any property is amortized under section 169, 184, 187, or 188, or any similar provision, then adjustments to earnings and profits for depreciation or amortization of such property for taxable years beginning after June 30, 1972, shall be determined as if the unrecovered cost or other basis of the property (less a reasonable estimate for salvage) as of the first day of the first taxable year beginning after June 30, 1972, were recovered through equal annual allowances over the estimated remaining useful life of the property determined in accordance with the circumstances existing at that time. See paragraph (a)(3)(ii) of this section for rules relating to the applicability of section 167(f).

(c) *Certain foreign corporations*. Paragraphs (a) and (b) of this section shall not apply in computing the earnings and profits of a foreign corporation for any taxable year for which less than 20 percent of the gross income from all sources of such corporation is derived from sources within the United States.

(d) *Books and records*. Wherever different methods of depreciation are used for taxable income and earnings and profits purposes, records shall be maintained which show the depreciation taken for earnings and profits purposes each year and which will allow computation of the adjusted basis of the property in each account using the depreciation taken for earnings and profits purposes.

[T.D. 7221, 37 FR 24746, Nov. 21, 1972]

DEFINITIONS; CONSTRUCTIVE OWNERSHIP OF STOCK

§ 1.316–1 Dividends.

(a)(1) The term *dividend* for the purpose of subtitle A of the Code (except when used in subchapter L, chapter 1 of the Code, in any case where the reference is to dividends and similar distributions of insurance companies paid to policyholders as such) comprises any

distribution of property as defined in section 317 in the ordinary course of business, even though extraordinary in amount, made by a domestic or foreign corporation to its shareholders out of either—

(i) Earnings and profits accumulated since February 28, 1913, or

(ii) Earnings and profits of the taxable year computed without regard to the amount of the earnings and profits (whether of such year or accumulated since February 28, 1913) at the time the distribution was made.

The earnings and profits of the taxable year shall be computed as of the close of such year, without diminution by reason of any distributions made during the taxable year. For the purpose of determining whether a distribution constitutes a dividend, it is unnecessary to ascertain the amount of the earnings and profits accumulated since February 28, 1913, if the earnings and profits of the taxable year are equal to or in excess of the total amount of the distributions made within such year.

(2) Where a corporation distributes property to its shareholders on or after June 22, 1954, the amount of the distribution which is a dividend to them may not exceed the earnings and profits of the distributing corporation.

(3) The rule of (2) above may be illustrated by the following example:

Example X and Y, individuals, each own one-half of the stock of Corporation A which has earnings and profits of $10,000. Corporation A distributes property having a basis of $6,000 and a fair market value of $16,000 to its shareholders, each shareholder receiving property with a basis of $3,000 and with a fair market value of $8,000 in a distribution to which section 301 applies. The amount taxable to each shareholder as a dividend under section 301(c) is $5,000.

(b)(1) In the case of a corporation which, under the law applicable to the taxable year in which a distribution is made, is a personal holding company or which, for the taxable year in respect of which a distribution is made under section 563 (relating to dividends paid within 2 1/2 months after the close of the taxable year), or section 547 (relating to deficiency dividends), or corresponding provisions of a prior income tax law, was under the applicable law a personal holding company, the term *dividend*, in addition to the meaning set forth in the first sentence of section 316, also means a distribution to its shareholders as follows: A distribution within a taxable year of the corporation, or of a shareholder, is a dividend to the extent of the corporation's undistributed personal holding company income (determined under section 545 without regard to distributions under section 316(b)(2)) for the taxable year in which, or, in the case of a distribution under section 563 or section 547, the taxable year in respect of which, the distribution was made. This subparagraph does not apply to distributions in partial or complete liquidation of a personal holding company. In the case of certain complete liquidations of a personal holding company see subparagraph (2) of this paragraph.

(2) In the case of a corporation which, under the law applicable to the taxable year in which a distribution is made, is a personal holding company or which, for the taxable year in respect of which a distribution is made under section 563, or section 547, or corresponding provisions of a prior income tax law, was under the applicable law a personal holding company, the term *dividend*, in addition to the meaning set forth in the first sentence of section 316, also means, in the case of a complete liquidation occurring within 24 months after the adoption of a plan of liquidation, a distribution of property to its shareholders within such period, but—

(i) Only to the extent of the amounts distributed to distributees other than corporate shareholders, and

(ii) Only to the extent that the corporation designates such amounts as a dividend distribution and duly notifies such distributees in accordance with subparagraph (5) of this paragraph, but

(iii) Not in excess of the sum of such distributees' allocable share of the undistributed personal holding company income for such year (determined under section 545 without regard to sections 562(b) and 316(b)(2)(B)).

Section 316(b)(2)(B) and this subparagraph apply only to distributions made in any taxable year of the distributing corporation beginning after December 31, 1963. The amount designated with respect to a noncorporate distributee may not exceed the amount actually

distributed to such distributee. For purposes of determining a noncorporate distributee's gain or loss on liquidation, amounts distributed in complete liquidation to such distributee during a taxable year are reduced by the amounts designated as a dividend with respect to such distributee for such year. For purposes of section 333(e)(1), a shareholder's ratable share of the earnings and profits of the corporation accumulated after February 28, 1913, shall be reduced by the amounts designated as a dividend with respect to such shareholder (even though such designated amounts are distributed during the 1-month period referred to in section 333).

(3) For purposes of subparagraph (2)(iii) of this paragraph—

(i) Except as provided in subdivision (ii) of this subparagraph, the sum of the noncorporate distributees' allocable share of undistributed personal holding company income for the taxable year in which, or in respect of which, the distribution was made (computed without regard to sections 562(b) and 316(b)(2)(B)) shall be determined by multiplying such undistributed personal holding company income by the ratio which the aggregate value of the stock held by all noncorporate shareholders immediately before the record date of the last liquidating distribution in such year bears to the total value of all stock outstanding on such date. For rules applicable in a case where the distributing corporation has more than one class of stock, see subdivision (iii) of this subparagraph.

(ii) If more than one liquidating distribution was made during the year, and if, after the record date of the first distribution but before the record date of the last distribution, there was a change in the relative shareholdings as between noncorporate shareholders and corporate shareholders, then the sum of the noncorporate distributees' allocable share of undistributed personal holding company income for the taxable year in which, or in respect of which, the distributions were made (computed without regard to sections 562(b) and 316(b)(2)(B)) shall be determined as follows:

(*a*) First, allocate the corporation's undistributed personal holding company income among the distributions made during the taxable year by reference to the ratio which the aggregate amount of each distribution bears to the total amount of all distributions during such year;

(*b*) Second, determine the noncorporate distributees' allocable share of the corporation's undistributed personal holding company income for each distribution by multiplying the amount determined under (*a*) of this subdivision (ii) for each distribution by the ratio which the aggregate value of the stock held by all noncorporate shareholders immediately before the record date of such distribution bears to the total value of all stock outstanding on such date; and

(*c*) Last, determine the sum of the noncorporate distributees' allocable share of the corporation's undistributed personal holding company income for all such distributions.

For rules applicable in a case where the distributing corporation has more than one class of stock, see subdivision (iii) of this subparagraph.

(iii) Where the distributing corporation has more than one class of stock—

(*a*) The undistributed personal holding company income for the taxable year in which, or in respect of which the distribution was made shall be treated as a fund from which dividends may properly be paid and shall be allocated between or among the classes of stock in a manner consistent with the dividend rights of such classes under local law and the pertinent governing instruments, such as, for example, the distributing corporation's articles or certificate of incorporation and bylaws;

(*b*) The noncorporate distributees' allocable share of the undistributed personal holding company income for each class of stock shall be determined separately in accordance with the rules set forth in subdivisions (i) or (ii) of this subparagraph, as if each class of stock were the only class of stock outstanding; and

(*c*) The sum of the noncorporate distributees' allocable share of the undistributed personal holding company income for the taxable year in which, or in respect of which, the distribution was made shall be the sum of the noncorporate distributees' allocable share

of the undistributed personal holding company income for all classes of stock.

(iv) For purposes of this subparagraph, in any case where the record date of a liquidating distribution cannot be ascertained, the record date of the distribution shall be the date on which the liquidating distribution was actually made.

(4) The amount designated as a dividend to a noncorporate distributee for any taxable year of the distributing corporation may not exceed an amount equal to the sum of the noncorporate distributees' allocable share of undistributed personal holding company income (as determined under subparagraph (3) of this paragraph) for such year multiplied by the ratio which the aggregate value of the stock held by such distributee immediately before the record date of the liquidating distribution or, if the record date cannot be ascertained, immediately before the date on which the liquidating distribution was actually made, bears to the aggregate value of stock outstanding held by all noncorporate distributees on such date. In any case where more than one liquidating distribution is made during the taxable year, the aggregate amount which may be designated as a dividend to a noncorporate distributee for such year may not exceed the aggregate of the amounts determined by applying the principle of the preceding sentence to the amounts determined under subparagraphs (3)(ii)(*a*) and (*b*) of this paragraph for each distribution. Where the distributing corporation has more than one class of stock, the limitation on the amount which may be designated as a dividend to a noncorporate distributee for any taxable year shall be determined by applying the rules of this subparagraph separately with respect to the noncorporate distributees' allocable share of the undistributed personal holding company income for each class of stock (as determined under subparagraphs (3)(iii)(*a*) and (*b*) of this paragraph).

(5) A corporation may designate as a dividend to a shareholder all or part of a distribution in complete liquidation described in section 316(b)(2)(B) of this paragraph by:

(i) Claiming a dividends paid deduction for such amount in its return for the year in which, or in respect of which, the distribution is made,

(ii) Including such amount as a dividend in Form 1099 filed in respect of such shareholder pursuant to section 6042(a) and the regulations thereunder and in a written statement of dividend payments furnished to such shareholder pursuant to section 6042(c) and § 1.6042–4, and

(iii) Indicating on the written statement of dividend payments furnished to such shareholder the amount included in such statement which is designated as a dividend under section 316(b)(2)(B) and this paragraph.

If a corporation complies with the procedure prescribed in the preceding sentence, it satisfies both the designation and notification requirements of section 316(b)(2)(B)(ii) and paragraph (b)(2)(ii) of this section. An amount designated as a dividend shall not be included as a distribution in liquidation on Form 1099L filed pursuant to § 1.6043–2 (relating to returns of information respecting distributions in liquidation). If a corporation designates a dividend in accordance with this subparagraph, it shall attach to the return in which it claims a deduction for such designated dividend a schedule indicating all facts necessary to determine the sum of the noncorporate distributees' allocable share of undistributed personal holding company income (determined in accordance with subparagraph (3) of this paragraph) for the year in which, or in respect of which, the distribution is made.

(c) Except as provided in section 316(b)(1), the term *dividend* includes any distribution of property to shareholders to the extent made out of accumulated or current earnings and profits. See, however, section 331 (relating to distributions in complete or partial liquidation), section 301(e) (relating to distributions by personal service corporations), section 302(b) (relating to redemptions treated as amounts received from the sale or exchange of stock), and section 303 (relating to distributions in redemption of stock to pay death taxes). See also section 305(b) for certain distributions of stock

or stock rights treated as distributions of property.

(d) In the case of a corporation which, under the law applicable to the taxable year in respect of which a distribution is made under section 860 (relating to deficiency dividends), was a regulated investment company (within the meaning of section 851), or a real estate investment trust (within the meaning of section 856), the term *dividend*, in addition to the meaning set forth in paragraphs (a) and (b) of section 316, means a distribution of property to its shareholders which constitutes a ''deficiency dividend'' as defined in section 860(f).

(e) The application of section 316 may be illustrated by the following examples:

Example (1). At the beginning of the calendar year 1955, Corporation M had an operating deficit of $200,000 and the earnings and profits for the year amounted to $100,000. Beginning on March 16, 1955, the corporation made quarterly distributions of $25,000 during the taxable year to its shareholders. Each distribution is a taxable dividend in full, irrespective of the actual or the pro rata amount of the earnings and profits on hand at any of the dates of distribution, since the total distributions made during the year ($100,000) did not exceed the total earnings and profits of the year ($100,000).

Example (2). At the beginning of the calendar year 1955, Corporation N, a personal holding company, had no accumulated earnings and profits. During that year it made no earnings and profits but, due to the disallowance of certain deductions, its undistributed personal holding company income (determined under section 545 without regard to distributions under section 316(b)(2)) was $16,000. It distributed to shareholders on December 15, 1955, $15,000, and on February 1, 1956, $1,000, the latter amount being claimed as a deduction under section 563 in its personal holding company schedule for 1955 filed with its return for 1955 on March 15, 1956. Both distributions are taxable dividends in full, since they do not exceed the undistributed personal holding company income (determined without regard to such distributions) for 1955, the taxable year in which the distribution of $15,000 was made and with respect to which the distribution of $1,000 was made. It is immaterial whether Corporation N is a personal holding company for the taxable year 1956 or whether it had any income for that year.

Example (3). In 1959, a deficiency in personal holding company tax was established against Corporation O for the taxable year 1955 in the amount of $35,500 based on an undistributed personal holding company income of $42,000. Corporation O complied with the provisions of section 547 and in December 1959 distributed $42,000 to its stockholders as ''deficiency dividends.'' The distribution of $42,000 is a taxable dividend since it does not exceed $42,000 (the undistributed personal holding company income for 1955, the taxable year with respect to which the distribution was made). It is immaterial whether Corporation O is a personal holding company for the taxable year 1959 or whether it had any income for that year.

Example (4). At the beginning of the taxable year 1955, Corporation P, a personal holding company, had a deficit in earnings and profits of $200,000. During that year it made earnings and profits of $90,000. For that year, however, it had an undistributed personal holding income (determined under section 545 without regard to distributions under section 316(b)(2)) of $80,000. During such taxable year it distributed to its shareholders $100,000. The distribution of $100,000 is a taxable dividend to the extent of $90,000 since its earnings and profits for that year, $90,000, exceed $80,000, the undistributed personal holding company income determined without regard to such distribution.

Example (5). Corporation O, a calendar year taxpayer, is completely liquidated on December 31, 1964, pursuant to a plan of liquidation adopted July 1, 1964. No distributions in liquidation were made pursuant to the plan of liquidation adopted July 1, 1964, until the distribution in complete liquidation on December 31, 1964. Corporation O has undistributed personal holding company income of $300,000 for the year 1964 (computed without regard to section 562(b) or section 316(b)(2)(B)). On December 31, 1964, immediately before the record date of the distribution in complete liquidation, individual A owns 200 shares of Corporation O's outstanding stock and Corporation P owns the remaining 100 shares of outstanding stock. All shares are equal in value. The noncorporate distributees' allocable share of undistributed personal holding company income for 1964 is $200,000

$$200 \text{ shares} \div 300 \text{ shares} \times \$300{,}000.$$

If at least $200,000 is distributed to A in the liquidation, then Corporation O may designate $200,000 to A as a dividend in accordance with paragraph (b)(5) of this section, and, if such amount is designated, then A must treat $200,000 as a dividend to which section 301 applies. For an example of the treatment of the distribution to Corporation P see paragraph (b)(2)(iii) of § 1.562–1.

Example (6). Corporation Q, a calendar year taxpayer, is completely liquidated on December 31, 1964, pursuant to a plan of liquidation adopted July 1, 1964. No distributions in liquidation were made pursuant to the plan of liquidation adopted July 1, 1964, until the

distribution in complete liquidation on December 31, 1964. Corporation Q has undistributed personal holding company income of $40,000 for the year 1964 (computed without regard to section 562(b) or section 316(b)(2)(B)). On December 31, 1964, immediately before the record date of the distribution in complete liquidation, Corporation Q has outstanding 300 shares of common stock and 100 shares of noncumulative preferred stock. Corporation Q's articles of incorporation provide that the preferred stock is entitled to dividends of $10 per share per year. Of Corporation Q's stock, individual B owns 200 shares of the common stock and 50 shares of the preferred stock, and Corporation R owns all remaining shares. All of the common shares are equal in value, and all of the preferred shares are equal in value. No dividends had been paid on the preferred stock during the year 1964. Of the $40,000 of undistributed personal holding company income, $1,000 must be allocated to the preferred stock because of the rights of the holders of such stock, under Q's articles of incorporation, to receive that amount in dividends for the year 1964. The noncorporate distributees' allocable share of undistributed personal holding company income for 1964 is $26,500.

50 preferred shares÷100 preferred shares×$1,000+200 common shares ÷ 300 common shares×$39,000

If at least $26,500 is distributed to B in the liquidation, then corporation Q may designate $26,500 to B as a dividend in accordance with paragraph (b)(5) of this section, and, if such amount is designated, then B must treat $26,500 as a dividend to which section 301 applies.

Example (7). In 1979, a deficiency of $46,000 in the tax on real estate investment trust taxable income is established against corporation R for the taxable year 1977, based on an increase in real estate investment trust taxable income of $100,000. Corporation R complied with the provisions of section 860 and in December 1979 distributed to its stockholders $100,000, which qualified as ''deficiency dividends'' under section 860. The distribution of $100,000 is a taxable dividend. It is immaterial whether corporation R is a real estate investment trust for the taxable year 1979 or whether it had accumulated or current earnings and profits in 1979. See section 316(b)(3).

(Sec. 860(l) (92 Stat. 2849, 26 U.S.C. 860(l)); sec. 860(g) (92 Stat. 2850, 26 U.S.C. 860(g)); and sec. 7805 (68A Stat. 917, 26 U.S.C. 7805))

[T.D. 6500, 25 FR 11607, Nov. 26, 1960, as amended by T.D. 6625, 27 FR 12541, Dec. 19, 1962; T.D. 6949, 33 FR 5519, Apr. 9, 1968; T.D. 7767, 46 FR 11264, Feb. 6, 1981; T.D. 7936, 49 FR 2105, Jan. 18, 1984]

§ 1.316–2 Sources of distribution in general.

(a) For the purpose of income taxation every distribution made by a corporation is made out of earnings and profits to the extent thereof and from the most recently accumulated earnings and profits. In determining the source of a distribution, consideration should be given first, to the earnings and profits of the taxable year; second, to the earnings and profits accumulated since February 28, 1913, only in the case where, and to the extent that, the distributions made during the taxable year are not regarded as out of the earnings and profits of that year; third, to the earnings and profits accumulated before March 1, 1913, only after all the earnings and profits of the taxable year and all the earnings and profits accumulated since February 28, 1913, have been distributed; and, fourth, to sources other than earnings and profits only after the earnings and profits have been distributed.

(b) If the earnings and profits of the taxable year (computed as of the close of the year without diminution by reason of any distributions made during the year and without regard to the amount of earnings and profits at the time of the distribution) are sufficient in amount to cover all the distributions made during that year, then each distribution is a taxable dividend. See § 1.316–1. If the distributions made during the taxable year consist only of money and exceed the earnings and profits of such year, then that proportion of each distribution which the total of the earnings and profits of the year bears to the total distributions made during the year shall be regarded as out of the earnings and profits of that year. The portion of each such distribution which is not regarded as out of earnings and profits of the taxable year shall be considered a taxable dividend to the extent of the earnings and profits accumulated since February 28, 1913, and available on the date of the distribution. In any case in which it is necessary to determine the amount of earnings and profits accumulated since February 28, 1913, and the actual earnings and profits to the date of a distribution within any taxable year (whether beginning before January 1,

1936, or, in the case of an operating deficit, on or after that date) cannot be shown, the earnings and profits for the year (or accounting period, if less than a year) in which the distribution was made shall be prorated to the date of the distribution not counting the date on which the distribution was made.

(c) The provisions of the section may be illustrated by the following example:

Example At the beginning of the calendar year 1955, Corporation M had $12,000 in earnings and profits accumulated since February 28, 1913. Its earnings and profits for 1955 amounted to $30,000. During the year it made quarterly cash distributions of $15,000 each. Of each of the four distributions made, $7,500 (that portion of $15,000 which the amount of $30,000, the total earnings and profits of the taxable year, bears to $60,000, the total distributions made during the year) was paid out of the earnings and profits of the taxable year; and of the first and second distributions, $7,500 and $4,500, respectively, were paid out of the earnings and profits accumulated after February 28, 1913, and before the taxable year, as follows:

Distributions during 1955		Portion out of earnings and profits of the taxable year	Portion out of earnings accumulated since Feb. 28, 1913, and before the taxable year	Taxable amt. of each distribution
Date	Amount			
March 10	$15,000	$7,500	$7,500	$15,000
June 10	15,000	7,500	4,500	12,000
September 10	15,000	7,500	.....	7,500
December 10	15,000	7,500	.....	7,500
Total amount taxable as dividends	.....	.....	.....	42,000

(d) Any distribution by a corporation out of earnings and profits accumulated before March 1, 1913, or out of increase in value of property accrued before March 1, 1913 (whether or not realized by sale or other disposition, and, if realized, whether before, on, or after March 1, 1913), is not a dividend within the meaning of subtitle A of the Code.

(e) A reserve set up out of gross income by a corporation and maintained for the purpose of making good any loss of capital assets on account of depletion or depreciation is not a part of surplus out of which ordinary dividends may be paid. A distribution made from a depletion or a depreciation reserve based upon the cost or other basis of the property will not be considered as having been paid out of earnings and profits, but the amount thereof shall be applied against and reduce the cost or other basis of the stock upon which declared. If such a distribution is in excess of the basis, the excess shall be taxed as a gain from the sale or other disposition of property as provided in section 301(c)(3)(A). A distribution from a depletion reserve based upon discovery value to the extent that such reserve represents the excess of the discovery value over the cost or other basis for determining gain or loss, is, when received by the shareholders, taxable as an ordinary dividend. The amount by which a corporation's percentage depletion allowance for any year exceeds depletion sustained on cost or other basis, that is, determined without regard to discovery or percentage depletion allowances for the year of distribution or prior years, constitutes a part of the corporation's ''earnings and profits accumulated after February 28, 1913,'' within the meaning of section 316, and, upon distribution to shareholders, is taxable to them as a dividend. A distribution made from that portion of a depletion reserve based upon a valuation as of March 1, 1913, which is in excess of the depletion reserve based upon cost, will not be considered as having been paid out of earnings and profits, but the amount of the distribution shall be applied against and reduce the cost or other basis of the stock upon which declared. See section 301. No distribution, however, can be made from such a reserve until all the earnings and profits of the corporation have first been distributed.

§ 1.317–1 Property defined.

The term *property*, for purposes of part 1, subchapter C, chapter 1 of the Code, means any property (including money, securities, and indebtedness to the corporation) other than stock, or rights to acquire stock, in the corporation making the distribution.

§ 1.318–1 Constructive ownership of stock; introduction.

(a) For the purposes of certain provisions of chapter 1 of the Code, section 318(a) provides that stock owned by a taxpayer includes stock constructively owned by such taxpayer under the rules set forth in such section. An individual is considered to own the stock owned, directly or indirectly, by or for his spouse (other than a spouse who is legally separated from the individual under a decree of divorce or separate maintenance), and by or for his children, grandchildren, and parents. Under section 318(a)(2) and (3), constructive ownership rules are established for partnerships and partners, estates and beneficiaries, trusts and beneficiaries, and corporations and stockholders. If any person has an option to acquire stock, such stock is considered as owned by such person. The term *option* includes an option to acquire such an option and each of a series of such options.

(b) In applying section 318(a) to determine the stock ownership of any person for any one purpose—

(1) A corporation shall not be considered to own its own stock by reason of section 318(a)(3)(C);

(2) In any case in which an amount of stock owned by any person may be included in the computation more than one time, such stock shall be included only once, in the manner in which it will impute to the person concerned the largest total stock ownership; and

(3) In determining the 50-percent requirement of section 318(a)(2)(C) and (3)(C), all of the stock owned actually and constructively by the person concerned shall be aggregated.

[T.D. 6969, 33 FR 11999, Aug. 23, 1968]

§ 1.318–2 Application of general rules.

(a) The application of paragraph (b) of § 1.318–1 may be illustrated by the following examples:

Example (1). H, an individual, owns all of the stock of corporation A. Corporation A is not considered to own the stock owned by H in corporation A.

Example (2). H, an individual, his wife, W, and his son, S, each own one-third of the stock of the Green Corporation. For purposes of determining the amount of stock owned by H, W, or S for purposes of section 318(a)(2)(C) and (3)(C), the amount of stock held by the other members of the family shall be added pursuant to paragraph (b)(3) of § 1.318–1 in applying the 50-percent requirement of such section. H, W, or S, as the case may be, is for this purpose deemed to own 100 percent of the stock of the Green Corporation.

(b) The application of section 318(a)(1), relating to members of a family, may be illustrated by the following example:

Example An individual, H, his wife, W, his son, S, and his grandson (S's son), G, own the 100 outstanding shares of stock of a corporation, each owning 25 shares. H, W, and S are each considered as owning 100 shares. G is considered as owning only 50 shares, that is, his own and his father's.

(c) The application of section 318(a)(2) and (3), relating to partnerships, trusts and corporations, may be illustrated by the following examples:

Example (1). A, an individual, has a 50 percent interest in a partnership. The partnership owns 50 of the 100 outstanding shares of stock of a corporation, the remaining 50 shares being owned by A. The partnership is considered as owning 100 shares. A is considered as owning 75 shares.

Example (2). A testamentary trust owns 25 of the outstanding 100 shares of stock of a corporation. A, an individual, who holds a vested remainder in the trust having a value, computed actuarially equal to 4 percent of the value of the trust property, owns the remaining 75 shares. Since the interest of A in the trust is a vested interest rather than a contingent interest (whether or not remote), the trust is considered as owning 100 shares. A is considered as owning 76 shares.

Example (3). The facts are the same as in (2), above, except that A's interest in the trust is a contingent remainder. A is considered as owning 76 shares. However, since A's interest in the trust is a remote contingent interest, the trust is not considered as owning any of the shares owned by A.

Example (4). A and B, unrelated individuals, own 70 percent and 30 percent, respectively, in value of the stock of Corporation M. Corporation M owns 50 of the 100 outstanding shares of stock of Corporation O, the remaining 50 shares being owned by A. Corporation M is considered as owning 100 shares of Corporation O, and A is considered as owning 85 shares.

Example (5). A and B, unrelated individuals, own 70 percent and 30 percent, respectively, of the stock of corporation M. A, B, and corporation M all own stock of corporation O. Since B owns less than 50 percent in value of the stock of corporation M, neither B nor corporation M constructively owns the stock

of corporation O owned by the other. However, for purposes of certain sections of the Code, such as sections 304 and 856(d), the 50-percent limitation of section 318(a)(2)(C) and (3)(C) is disregarded or is reduced to less than 30 percent. For such purposes, B constructively owns his proportionate share of the stock of corporation O owned directly by corporation M, and corporation M constructively owns the stock of corporation O owned by B.

[T.D. 6500, 25 FR 11607, Nov. 26, 1960, as amended by T.D. 6969, 33 FR 11999, Aug. 23, 1968]

§ 1.318–3 Estates, trusts, and options.

(a) For the purpose of applying section 318(a), relating to estates, property of a decedent shall be considered as owned by his estate if such property is subject to administration by the executor or administrator for the purpose of paying claims against the estate and expenses of administration notwithstanding that, under local law, legal title to such property vests in the decedent's heirs, legatees or devisees immediately upon death. The term *beneficiary* includes any person entitled to receive property of a decedent pursuant to a will or pursuant to laws of descent and distribution. A person shall no longer be considered a beneficiary of an estate when all the property to which he is entitled has been received by him, when he no longer has a claim against the estate arising out of having been a beneficiary, and when there is only a remote possibility that it will be necessary for the estate to seek the return of property or to seek payment from him by contribution or otherwise to satisfy claims against the estate or expenses of administration. When, pursuant to the preceding sentence, a person ceases to be a beneficiary, stock owned by him shall not thereafter be considered owned by the estate, and stock owned by the estate shall not thereafter be considered owned by him. The application of section 318(a) relating to estates may be illustrated by the following examples:

Example (1). (a) A decedent's estate owns 50 of the 100 outstanding shares of stock of corporation X. The remaining shares are owned by three unrelated individuals, A, B, and C, who together own the entire interest in the estate. A owns 12 shares of stock of corporation X directly and is entitled to 50 percent of the estate. B owns 18 shares directly and has a life estate in the remaining 50 percent of the estate. C owns 20 shares directly and also owns the remainder interest after B's life estate.

(b) If section 318(a)(5)(C) applies (see paragraph (c)(3) of § 1.318–4), the stock of corporation X is considered to be owned as follows: the estate is considered as owning 80 shares, 50 shares directly, 12 shares constructively through A, and 18 shares constructively through B; A is considered as owning 37 shares, 12 shares directly, and 25 shares constructively (50 percent of the 50 shares owned directly by the estate); B is considered as owning 43 shares, 18 shares directly and 25 shares constructively (50 percent of the 50 shares owned directly by the estate); C is considered as owning 20 shares directly and no shares constructively. C is not considered a beneficiary of the estate under section 318(a) since he has no direct present interest in the property held by the estate nor in the income produced by such property.

(c) If section 318(a)(5)(C) does not apply, A is considered as owning nine additional shares (50 percent of the 18 shares owned constructively by the estate through B), and B is considered as owning six additional shares (50 percent of the 12 shares owned constructively by the estate through A).

Example (2). Under the will of A, Blackacre is left to B for life, remainder to C, an unrelated individual. The residue of the estate consisting of stock of a corporation is left to D. B and D are beneficiaries of the estate under section 318(a). C is not considered a beneficiary since he has no direct present interest in Blackacre nor in the income produced by such property. The stock owned by the estate is considered as owned proportionately by B and D.

(b) For the purpose of section 318(a)(2)(B) stock owned by a trust will be considered as being owned by its beneficiaries only to the extent of the interest of such beneficiaries in the trust. Accordingly, the interest of income beneficiaries, remainder beneficiaries, and other beneficiaries will be computed on an actuarial basis. Thus, if a trust owns 100 percent of the stock of Corporation A, and if, on an actuarial basis, W's life interest in the trust is 15 percent, Y's life interest is 25 percent, and Z's remainder interest is 60 percent, under this provision W will be considered to be the owner of 15 percent of the stock of Corporation A, Y will be considered to be the owner of 25 percent of such stock, and Z will be considered to be the owner of 60 percent of such stock. The factors and methods prescribed in § 20.2031–7 of this

chapter (Estate Tax Regulations) for use in ascertaining the value of an interest in property for estate tax purposes shall be used in determining a beneficiary's actuarial interest in a trust for purposes of this section. See § 20.2031–7 of this chapter (Estate Tax Regulations) for examples illustrating the use of these factors and methods.

(c) The application of section 318(a) relating to options may be illustrated by the following example:

Example. A and B, unrelated individuals, own all of the 100 outstanding shares of stock of a corporation, each owning 50 shares. A has an option to acquire 25 of B's shares and has an option to acquire a further option to acquire the remaining 25 of B's shares. A is considered as owning the entire 100 shares of stock of the corporation.

[T.D. 6500, 25 FR 11607, Nov. 26, 1960, as amended by T.D. 6969, 33 FR 11999, Aug. 23, 1968]

§ 1.318–4 Constructive ownership as actual ownership; exceptions.

(a) *In general.* Section 318(a)(5)(A) provides that, except as provided in section 318(a)(5) (B) and (C), stock constructively owned by a person by reason of the application of section 318(a) (1), (2), (3), or (4) shall be considered as actually owned by such person for purposes of applying section 318(a) (1), (2), (3), and (4). For example, if a trust owns 50 percent of the stock of corporation X, stock of corporation Y owned by corporation X which is attributed to the trust may be further attributed to the beneficiaries of the trust.

(b) *Constructive family ownership.* Section 318(a)(5)(B) provides that stock constructively owned by an individual by reason of ownership by a member of his family shall not be considered as owned by him for purposes of making another family member the constructive owner of such stock under section 318(a)(1). For example, if F and his two sons, A and B, each own one-third of the stock of a corporation, under section 318(a)(1), A is treated as owning constructively the stock owned by his father but is not treated as owning the stock owned by B. Section 318(a)(5)(B) prevents the attribution of the stock of one brother through the father to the other brother, an attribution beyond the scope of section 318(a)(1) directly.

(c) *Reattribution.* (1) Section 318(a)(5)(C) provides that stock constructively owned by a partnership, estate, trust, or corporation by reason of the application of section 318(a)(3) shall not be considered as owned by it for purposes of applying section 318(a)(2) in order to make another the constructive owner of such stock. For example, if two unrelated individuals are beneficiaries of the same trust, stock held by one which is attributed to the trust under section 318(a)(3) is not reattributed from the trust to the other beneficiary. However, stock constructively owned by reason of section 318(a)(2) may be reattributed under section 318(a)(3). Thus, for example, if all the stock of corporations X and Y is owned by A, stock of corporation Z held by X is attributed to Y through A.

(2) Section 318(a)(5)(C) does not prevent reattribution under section 318(a)(2) of stock constructively owned by an entity under section 318(a)(3) if the stock is also constructively owned by the entity under section 318(a)(4). For example, if individuals A and B are beneficiaries of a trust and the trust has an option to buy stock from A, B is considered under section 318(a)(2)(B) as owning a proportionate part of such stock.

(3) Section 318(a)(5)(C) is effective on and after August 31, 1964, except that for purposes of sections 302 and 304 it does not apply with respect to distributions in payment for stock acquisitions or redemptions if such acquisitions or redemptions occurred before August 31, 1964.

[T.D. 6969, 33 FR 11999, Aug. 23, 1968]

CORPORATE LIQUIDATIONS

EFFECTS ON RECIPIENTS

§ 1.331–1 Corporate liquidations.

(a) Section 331 contains rules governing the extent to which gain or loss is recognized to a shareholder receiving a distribution in complete or partial liquidation of a corporation. Under section 331(a)(1), it is provided that amounts distributed in complete liquidation of a corporation shall be treated as in full payment in exchange for the stock. Under section 331(a)(2), it is provided that amounts distributed in

partial liquidation of a corporation shall be treated as in full or part payment in exchange for the stock. For this purpose, the term *partial liquidation* shall have the meaning ascribed in section 346. If section 331 is applicable to the distribution of property by a corporation, section 301 (relating to the effects on a shareholder of distributions of property) has no application other than to a distribution in complete liquidation to which section 316(b)(2)(B) applies. See paragraph (b)(2) of § 1.316–1.

(b) The gain or loss to a shareholder from a distribution in partial or complete liquidation is to be determined under section 1001 by comparing the amount of the distribution with the cost or other basis of the stock. The gain or loss will be recognized to the extent provided in section 1002 and will be subject to the provisions of parts I, II, and III (section 1201 and following), subchapter P, chapter 1 of the Code.

(c) A liquidation which is followed by a transfer to another corporation of all or part of the assets of the liquidating corporation or which is preceded by such a transfer may, however, have the effect of the distribution of a dividend or of a transaction in which no loss is recognized and gain is recognized only to the extent of ''other property.'' See sections 301 and 356.

(d) In every case in which a shareholder transfers stock in exchange for property to the corporation which issued such stock, the facts and circumstances shall be reported on his return unless the property is part of a distribution made pursuant to a corporate resolution reciting that the distribution is made in liquidation of the corporation and the corporation is completely liquidated and dissolved within one year after the distribution. See section 6043 for requirements relating to returns by corporations.

(e) The provisions of this section may be illustrated by the following example:

Example A, an individual who makes his income tax returns on the calendar year basis, owns 20 shares of stock of the P Corporation, a domestic corporation, 10 shares of which were acquired in 1951 at a cost of $1,500 and the remainder of 10 shares in December 1954 at a cost of $2,900. He receives in April 1955 a distribution of $250 per share in complete liquidation, or $2,500 on the 10 shares acquired in 1951, and $2,500 on the 10 shares acquired in December 1954. The gain of $1,000 on the shares acquired in 1951 is a long-term capital gain to be treated as provided in parts I, II, and III (section 1201 and following), subchapter P, chapter 1 of the Code. The loss of $400 on the shares acquired in 1954 is a short-term capital loss to be treated as provided in parts I, II, and III (section 1201 and following), subchapter P, chapter 1 of the Code.

[T.D. 6500, 25 FR 11607, Nov. 26, 1960, as amended by T.D. 6949, 33 FR 5521, Apr. 9, 1968]

§ 1.332–1 Distributions in liquidation of subsidiary corporation; general.

Under the general rule prescribed by section 331 for the treatment of distributions in liquidation of a corporation, amounts received by one corporation in complete liquidation of another corporation are treated as in full payment in exchange for stock in such other corporation, and gain or loss from the receipt of such amounts is to be determined as provided in section 1001. Section 332 excepts from the general rule property received, under certain specifically described circumstances, by one corporation as a distribution in complete liquidation of the stock of another corporation and provides for the nonrecognition of gain or loss in those cases which meet the statutory requirements. Section 367 places a limitation on the application of section 332 in the case of foreign corporations. See section 334(b) for the basis for determining gain or loss from the subsequent sale of property received upon complete liquidations such as described in this section. See section 453(d)(4)(A) relative to distribution of installment obligations by subsidiary.

§ 1.332–2 Requirements for nonrecognition of gain or loss.

(a) The nonrecognition of gain or loss is limited to the receipt of such property by a corporation which is the actual owner of stock (in the liquidating corporation) possessing at least 80 percent of the total combined voting power of all classes of stock entitled to vote and the owner of at least 80 percent of the total number of shares of all other classes of stock (except nonvoting stock which is limited and preferred as to dividends). The recipient corporation must have been the owner

of the specified amount of such stock on the date of the adoption of the plan of liquidation and have continued so to be at all times until the receipt of the property. If the recipient corporation does not continue qualified with respect to the ownership of stock of the liquidating corporation and if the failure to continue qualified occurs at any time prior to the completion of the transfer of all the property, the provisions for the nonrecognition of gain or loss do not apply to any distribution received under the plan.

(b) Section 332 applies only to those cases in which the recipient corporation receives at least partial payment for the stock which it owns in the liquidating corporation. If section 332 is not applicable, see section 165(g) relative to allowance of losses on worthless securities.

(c) To constitute a distribution in complete liquidation within the meaning of section 332, the distribution must be (1) made by the liquidating corporation in complete cancellation or redemption of all of its stock in accordance with a plan of liquidation, or (2) one of a series of distributions in complete cancellation or redemption of all its stock in accordance with a plan of liquidation. Where there is more than one distribution, it is essential that a status of liquidation exist at the time the first distribution is made under the plan and that such status continue until the liquidation is completed. Liquidation is completed when the liquidating corporation and the receiver or trustees in liquidation are finally divested of all the property (both tangible and intangible). A status of liquidation exists when the corporation ceases to be a going concern and its activities are merely for the purpose of winding up its affairs, paying its debts, and distributing any remaining balance to its shareholders. A liquidation may be completed prior to the actual dissolution of the liquidating corporation. However, legal dissolution of the corporation is not required. Nor will the mere retention of a nominal amount of assets for the sole purpose of preserving the corporation's legal existence disqualify the transaction. (See 26 CFR (1939) 39.22(a)–20 (Regulations 118).)

(d) If a transaction constitutes a distribution in complete liquidation within the meaning of the Internal Revenue Code of 1954 and satisfies the requirements of section 332, it is not material that it is otherwise described under the local law. If a liquidating corporation distributes all of its property in complete liquidation and if pursuant to the plan for such complete liquidation a corporation owning the specified amount of stock in the liquidating corporation receives property constituting amounts distributed in complete liquidation within the meaning of the Code and also receives other property attributable to shares not owned by it, the transfer of the property to the recipient corporation shall not be treated, by reason of the receipt of such other property, as not being a distribution (or one of a series of distributions) in complete cancellation or redemption of all of the stock of the liquidating corporation within the meaning of section 332, even though for purposes of those provisions relating to corporate reorganizations the amount received by the recipient corporation in excess of its ratable share is regarded as acquired upon the issuance of its stock or securities in a tax-free exchange as described in section 361 and the cancellation or redemption of the stock not owned by the recipient corporation is treated as occurring as a result of a taxfree exchange described in section 354.

(e) The application of these rules may be illustrated by the following example:

Example On September 1, 1954, the M Corporation had outstanding capital stock consisting of 3,000 shares of common stock, par value $100 a share, and 1,000 shares of preferred stock, par value $100 a share, which preferred stock was limited and preferred as to dividends and had no voting rights. On that date, and thereafter until the date of dissolution of the M Corporation, the O Corporation owned 2,500 shares of common stock of the M Corporation. By statutory merger consummated on October 1, 1954, pursuant to a plan of liquidation adopted on September 1, 1954, the M Corporation was merged into the O Corporation, the O Corporation under the plan issuing stock which was received by the other holders of the stock of the M Corporation. The receipt by the O Corporation of the

properties of the M Corporation is a distribution received by the O Corporation in complete liquidation of the M Corporation within the meaning of section 332, and no gain or loss is recognized as the result of the receipt of such properties.

§ 1.332–3 Liquidations completed within one taxable year.

If in a liquidation completed within one taxable year pursuant to a plan of complete liquidation, distributions in complete liquidation are received by a corporation which owns the specified amount of stock in the liquidating corporation and which continues qualified with respect to the ownership of such stock until the transfer of all the property within such year is completed (see paragraph (a) of § 1.332–2), then no gain or loss shall be recognized with respect to the distributions received by the recipient corporation. In such case no waiver or bond is required of the recipient corporation under section 332.

§ 1.332–4 Liquidations covering more than one taxable year.

(a) If the plan of liquidation is consummated by a series of distributions extending over a period of more than one taxable year, the nonrecognition of gain or loss with respect to the distributions in liquidation shall, in addition to the requirements of § 1.332–2, be subject to the following requirements:

(1) In order for the distribution in liquidation to be brought within the exception provided in section 332 to the general rule for computing gain or loss with respect to amounts received in liquidation of a corporation, the entire property of the corporation shall be transferred in accordance with a plan of liquidation, which plan shall include a statement showing the period within which the transfer of the property of the liquidating corporation to the recipient corporation is to be completed. The transfer of all the property under the liquidation must be completed within three years from the close of the taxable year during which is made the first of the series of distributions under the plan.

(2) For each of the taxable years which falls wholly or partly within the period of liquidation, the recipient corporation shall, at the time of filing its return, file with the district director of internal revenue a waiver of the statute of limitations on assessment. The waiver shall be executed on such form as may be prescribed by the Commissioner and shall extend the period of assessment of all income and profits taxes for each such year to a date not earlier than one year after the last date of the period for assessment of such taxes for the last taxable year in which the transfer of the property of such liquidating corporation to the controlling corporation may be completed in accordance with section 332. Such waiver shall also contain such other terms with respect to assessment as may be considered by the Commissioner to be necessary to insure the assessment and collection of the correct tax liability for each year within the period of liquidation.

(3) For each of the taxable years which falls wholly or partly within the period of liquidation, the recipient corporation may be required to file a bond, the amount of which shall be fixed by the district director. The bond shall contain all terms specified by the Commissioner, including provisions unequivocally assuring prompt payment of the excess of income and profits taxes (plus penalty, if any, and interest) as computed by the district director without regard to the provisions of sections 332 and 334(b) over such taxes computed with regard to such provisions, regardless of whether such excess may or may not be made the subject of a notice of deficiency under section 6212 and regardless of whether it may or may not be assessed. Any bond required under section 332 shall have such surety or sureties as the Commissioner may require. However, see 6 U.S.C. 15, providing that where a bond is required by law or regulations, in lieu of surety or sureties there may be deposited bonds or notes of the United States. Only surety companies holding certificates of authority from the Secretary as acceptable sureties on Federal bonds will be approved as sureties. The bonds shall be executed in triplicate so that the Commissioner, the taxpayer, and the surety or the depositary may each have a copy. On and after September 1, 1953, the functions of the Commissioner with respect to such bonds shall be performed by the

district director for the internal revenue district in which the return was filed and any bond filed on or after such date shall be filed with such district director.

(b) Pending the completion of the liquidation, if there is a compliance with paragraph (a) (1), (2), and (3) of this section and § 1.332–2 with respect to the nonrecognition of gain or loss, the income and profits tax liability of the recipient corporation for each of the years covered in whole or in part by the liquidation shall be determined without the recognition of any gain or loss on account of the receipt of the distributions in liquidation. In such determination, the basis of the property or properties received by the recipient corporation shall be determined in accordance with section 334(b). However, if the transfer of the property is not completed within the three-year period allowed by section 332 or if the recipient corporation does not continue qualified with respect to the ownership of stock of the liquidating corporation as required by that section, gain or loss shall be recognized with respect to each distribution and the tax liability for each of the years covered in whole or in part by the liquidation shall be recomputed without regard to the provisions of section 332 or section 334(b) and the amount of any additional tax due upon such recomputation shall be promptly paid.

§ 1.332–5 Distributions in liquidation as affecting minority interests.

Upon the liquidation of a corporation in pursuance of a plan of complete liquidation, the gain or loss of minority shareholders shall be determined without regard to section 332, since it does not apply to that part of distributions in liquidation received by minority shareholders.

§ 1.332–6 Records to be kept and information to be filed with return.

(a) Permanent records in substantial form shall be kept by every corporation receiving distributions in complete liquidation within the exception provided in section 332 showing the information required by this section to be submitted with its return. The plan of liquidation must be adopted by each of the corporations parties thereto; and the adoption must be shown by the acts of its duly constituted responsible officers, and appear upon the official records of each such corporation.

(b) For the taxable year in which the liquidation occurs, or, if the plan of liquidation provides for a series of distributions over a period of more than one year, for each taxable year in which a distribution is received under the plan the recipient must file with its return a complete statement of all facts pertinent to the nonrecognition of gain or loss, including:

(1) A certified copy of the plan for complete liquidation, and of the resolutions under which the plan was adopted and the liquidation was authorized, together with a statement under oath showing in detail all transactions incident to, or pursuant to, the plan.

(2) A list of all the properties received upon the distribution, showing the cost or other basis of such properties to the liquidating corporation at the date of distribution and the fair market value of such properties on the date distributed.

(3) A statement of any indebtedness of the liquidating corporation to the recipient corporation on the date the plan of liquidation was adopted and on the date of the first liquidating distribution. If any such indebtedness was acquired at less than face value, the cost thereof to the recipient corporation must also be shown.

(4) A statement as to its ownership of all classes of stock of the liquidating corporation (showing as to each class the number of shares and percentage owned and the voting power of each share) as of the date of the adoption of the plan of liquidation, and at all times since, to and including the date of the distribution in liquidation. The cost or other basis of such stock and the date or dates on which purchased must also be shown.

§ 1.332–7 Indebtedness of subsidiary to parent.

If section 332(a) is applicable to the receipt of the subsidiary's property in complete liquidation, then no gain or

loss shall be recognized to the subsidiary upon the transfer of such properties even though some of the properties are transferred in satisfaction of the subsidiary's indebtedness to its parent. However, any gain or loss realized by the parent corporation on such satisfaction of indebtedness, shall be recognized to the parent corporation at the time of the liquidation. For example, if the parent corporation purchased its subsidiary's bonds at a discount and upon liquidation of the subsidiary the parent corporation receives payment for the face amount of such bonds, gain shall be recognized to the parent corporation. Such gain shall be measured by the difference between the cost or other basis of the bonds to the parent and the amount received in payment of the bonds.

§ 1.334–1 Basis of property received in liquidations.

(a) *In general.* Section 334 sets forth rules prescribing the basis of property received in a distribution in partial or complete liquidation of a corporation. The general rule of section 334 is set forth in section 334(a) to the effect that if property is received in a distribution in partial or complete liquidation and if gain or loss is recognized on the receipt of such property, then the basis of the property in the hands of the distributee shall be the fair market value of such property at the time of the distribution. Such general rule has no application to a liquidation to which section 332 or section 333 applies. See section 334 (b) and (c).

(b) *Transferor's basis.* Unless section 334(b)(2) and subsection (c) of this section apply, property received by a parent corporation in a complete liquidation to which section 332 is applicable shall, under section 334(b)(1), have the same basis in the hands of the parent as its adjusted basis in the hands of the subsidiary. The rule stated above is applicable even though the subsidiary was indebted to the parent on the date the plan of liquidation was adopted and part of such property was received in satisfaction of such indebtedness in a transfer to which section 332(c) is applicable.

[T.D. 7231, 37 FR 28287, Dec. 22, 1972, as amended at T.D. 8474, 58 FR 25557, Apr. 27, 1993]

EFFECTS ON CORPORATION

§ 1.337(d)–1 Transitional loss limitation rule.

(a) *Loss limitation rule for transitional subsidiary*—(1) *General rule.* No deduction is allowed for any loss recognized by a member of a consolidated group with respect to the disposition of stock of a transitional subsidiary.

(2) *Allowable loss*—(i) *In general.* Paragraph (a)(1) of this section does not apply to the extent the taxpayer establishes that the loss is not attributable to the recognition of built-in gain by any transitional subsidiary on the disposition of an asset (including stock and securities) after January 6, 1987.

(ii) *Statement of allowable loss.* Paragraph (a)(2)(i) of this section applies only if a separate statement entitled ''Allowable Loss Under § 1.337(d)–1(a)'' is filed with the taxpayer's return for the year of the stock disposition. If the separate statement is required to be filed with a return the due date (including extensions) of which is before January 16, 1991, or with a return due (including extensions) after January 15, 1991 but filed before that date, the statement may be filed with an amended return for the year of the disposition or with the taxpayer's first subsequent return the due date (including extensions) of which is after January 15, 1991.

(iii) *Contents of statement.* The statement required under paragraph (a)(2)(ii) of this section must contain—

(A) The name and employer identification number (E.I.N.) of the transitional subsidiary.

(B) The basis of the stock of the transitional subsidiary immediately before the disposition.

(C) The amount realized on the disposition.

(D) The amount of the deduction not disallowed under paragraph (a)(1) of this section by reason of this paragraph (a)(2).

(E) The amount of loss disallowed under paragraph (a)(1) of this section.

(3) *Coordination with loss deferral and other disallowance rules.* (i) For purposes of this section, the rules of § 1.1502–20(a)(3) apply, with appropriate adjustments to reflect differences between the approach of this section and that of § 1.1502–20.

(ii) *Other loss deferral rules.* If paragraph (a)(1) of this section applies to a loss subject to deferral or disallowance under any other provision of the Code or the regulations, the other provision applies to the loss only to the extent it is not disallowed under paragraph (a)(1).

(4) *Definitions.* For purposes of this section—

(i) The definitions in § 1.1502–1 apply.

(ii) *Transitional subsidiary* means any corporation that became a subsidiary of the group (whether or not the group was a consolidated group) after January 6, 1987. Notwithstanding the preceding sentence, a subsidiary is not a transitional subsidiary if the subsidiary (and each predecessor) was a member of the group at all times after the subsidiary's (and each predecessor's) organization.

(iii) *Built-in gain* of a transitional subsidiary means gain attributable, directly or indirectly, in whole or in part, to any excess of value over basis, determined immediately before the transitional subsidiary became a subsidiary, with respect to any asset owned directly or indirectly by the transitional subsidiary at that time.

(iv) *Disposition* means any event in which gain or loss is recognized, in whole or in part.

(v) *Value* means fair market value.

(5) *Examples.* For purposes of the examples in this section, unless otherwise stated, the group files consolidated returns on a calendar year basis, the facts set forth the only corporate activity, and all sales and purchases are with unrelated buyers or sellers. The basis of each asset is the same determining earnings and profits adjustments and taxable income. Tax liability and its effect on basis, value, and earnings and profits are disregarded. *Investment adjustment system* means the rules of § 1.1502–32. The principles of this paragraph (a) are illustrated by the following examples:

Example 1. Loss attributable to recognized built-in gain.

(i) P buys all the stock of T for $100 on February 1, 1987, and T becomes a member of the P group. T has an asset with a value of $100 and basis of $0. T sells the asset in 1989 and recognizes $100 of built-in gain on the sale (*i.e.,* the asset's value exceeded its basis by $100 at the time T became a member of the P group). Under the investment adjustment system, P's basis in the T stock increases to $200. P sells all the stock of T on December 31, 1989, and recognizes a loss of $100. Under paragraph (a)(1) of this section, no deduction is allowed to P for the $100 loss.

(ii) Assume that, after T sells its asset but before P sells the T stock, T issues additional stock to unrelated persons and ceases to be a member of the P group. P then sells all its stock of T in 1997. Although T ceases to be a subsidiary within the meaning of § 1.1502–1, T continues to be a transitional subsidiary within the meaning of this section. Consequently, under paragraph (a)(1) of this section, no deduction is allowed to P for its $100 loss.

Example 2. Loss attributable to post-acquisition loss.

P buys all the stock of T for $100 on February 1, 1987, and T becomes a member of the P group. T has $50 cash and an asset with $50 of built-in gain. During 1988, T retains the asset but loses $40 of the cash. The P group is unable to use the loss, and the loss becomes a net operating loss carryover attributable to T. Under the investment adjustment system, P's basis in the stock of T remains $100. P sells all the stock of T on December 31, 1988, for $60 and recognizes a $40 loss. Under paragraph (a)(2)(i) of this section, P establishes that it did not dispose of the built-in gain asset. None of P's loss is disallowed under paragraph (a)(1) if P satisfies the requirements of paragraph (a)(2)(ii) of this section.

Example 3. Stacking rules—postacquisition loss offsets postacquisition gain.

(i) P. buys all the stock of T for $100 on February 1, 1987, and T becomes a member of the P group. T has 2 assets. Asset 1 has a basis and value of $50, and asset 2 has a basis of $0 and a value of $50. During 1989, asset 1 declines in value to $0, and T sells asset 2 for $50, and reinvests the proceeds in asset 3. The value of asset 3 appreciates to $90. Under the investment adjustment system, P's basis in the stock of T increases from $100 to $150 as a result of the gain recognized on the sale of asset 2 but is unaffected by the unrealized post-acquisition decline in the value of asset 1. On December 31, 1989, P sells all the stock of T for $90 and recognizes a $60 loss.

(ii) Although T incurred a $50 post-acquisition loss of built-in gain because of the decline in the value of asset 1, T also recognized $50 of built-in gain. Under paragraph (a)(2) of this section, any loss on the sale of stock is treated first as attributable to recognized built-in gain. Thus, for purposes of determining under paragraph (a)(2) of this section whether P's $60 loss on the disposition of the T stock is attributable to the recognition of built-in gain on the disposition of an asset, T's unrealized post-acquisition gain of $40 offsets $40 of the $50 of unrealized post-acquisition loss. Therefore, $50 of the $60 loss is attributable to the recognition of built-in gain on the disposition of an asset and is disallowed under paragraph (a)(1) of this section.

Example 4. Stacking rules—built-in loss offsets built-in gain.

(i) P buys all the stock of T for $50 on February 1, 1987, and T becomes a member of the P group. T has 2 assets. Asset 1 has a basis of $50 and a value of $0, and asset 2 has a basis of $0 and a value of $50. During 1989, T sells asset 1 for $0 and asset 2 for $50, and reinvests the $50 proceeds in asset 3. The value of asset 3 declines to $40. Under the investment adjustment system, P's basis in the stock of T remains $50 as a result of the offsetting gain and loss recognized on the sale of assets 1 and 2 and is unaffected by the unrealized post-acquisition decline in the value of asset 3. On December 31, 1989, P sells all the stock of T for $40 and recognizes a $10 loss.

(ii) Although T recognized a $50 built-in gain on the sale of asset 2, T also recognized a $50 built-in loss on the sale of asset 1. For purposes of determining under paragraph (a)(2) of this section whether P's $10 loss on the disposition of the T stock is attributable to the recognition of built-in gain on the disposition of an asset, T's recognized built-in gain is offset by its recognized built-in loss. Thus none of P's $10 loss is attributable to the recognition of built-in gain on the disposition of an asset.

(iii) The result would be the same if, instead of a $50 built-in loss in asset 2, T has a $50 net operating loss carryover when P buys the T stock, and the net operating loss carryover is used to offset the built-in gain.

Example 5. Outside basis partially corresponds to inside basis.

(i) Individual A owns all the stock of T, for which A has a basis of $60. On February 1, 1987, T owns 1 asset with a basis of $0 and a value of $100, P acquires all the stock of T from A in an exchange to which section 351(a) applies, and T becomes a member of the P group. P has a carryover basis of $60 in the T stock. During 1988, T sells the asset and recognizes $100 of gain. Under the investment adjustment system, P's basis in the T stock increases from $60 to $160. T reinvests the $100 proceeds in another asset, which declines in value to $90. On January 1, 1989, P sells all the stock of T for $90 and recognizes a loss of $70.

(ii) Although P's basis in the T stock was increased by $100 as a result of the recognition of built-in gain on the disposition of T's asset, only $60 of the $70 loss on the sale of the stock is attributable under paragraph (a)(2) of this section to the recognition of built-in gain from the disposition of the asset. (Had T's asset not declined in value to $90, the T stock would have been sold for $100, and a $60 loss would have been attributable to the recognition of the built-in gain.) Therefore, $60 of the $70 loss is disallowed under paragraph (a)(2), and $10 is not disallowed if P satisfies the requirements of paragraph (a)(2). If P had sold the stock of T for $95 because T's other assets had unrealized appreciation of $5, $60 of the $65 loss would still be attributable to T's recognition of built-in gain on the disposition of assets.

Example 6. Creeping acquisition.

P owns 60 percent of the stock of S on January 6, 1987. On February 1, 1987, P buys an additional 20 percent of the stock of S, and S becomes a member of the P group. P sells all the S stock on March 1, 1989 and recognizes a loss of $100. All 80 percent of the stock of S owned by P is subject to the rules of this section and, under paragraph (a) (1) and (2) of this section, P is not allowed to deduct the $100 loss, except to the extent P establishes the loss is not attributable to the recognition by S of built-in gain on the disposition of assets.

Example 7. Effect of post-acquisition appreciation. P buys all the stock of T for $100, and T becomes a member of the P group. T has an asset with a basis of $0 and a value of $100. T sells the asset for $100. Under the investment adjustment system, P's basis in the T stock increases to $200. T reinvests the proceeds of the sale in an asset that appreciates in value to $180. Five years after the sale, P sells all the stock of T for $180 and recognizes a $20 loss. Under paragraph (a)(1) of this section, no deduction is allowed to P for the $20 loss.

Example 8. Deferred loss and recognized gain.

(i) P is the common parent of a consolidated group, S is a wholly owned subsidiary of P, and T is a wholly owned subsidiary of S. S purchased all of the T stock on February 1, 1987 for $100, and T has an asset with a basis of $40 and a value of $100. T sells the asset for $100, recognizing $60 of gain. Under the investment adjustment system, S's basis in the T stock increases from $100 to $160. S sells its T stock to P for $100 in a deferred intercompany transaction, recognizing a $60 loss that is deferred under section 267(f) and § 1.1502–13. P subsequently sells all the stock of T for $100 to X, a member of the same controlled group (as defined in section 267(f)) as P but not a member of the P consolidated group.

(ii) Under paragraph (a)(3) of this section, the application of paragraph (a)(1) of this section to S's $60 loss is deferred, because S's loss is deferred under section 267(f) and § 1.1502–13. Although P's sale of the T stock to X would cause S's deferred loss to be taken into account under § 1.1502–13, § 1.267(f)–1 provides that the loss is not taken into account because X is a member of the same controlled group as P and S. Nevertheless, under paragraph (a)(3) of this section, because the T stock ceases to be owned by a member of the P consolidated group, S's deferred loss is disallowed immediately before the sale and is never taken into account under section 267(f).

(b) *Indirect disposition of transitional subsidiary*—(1) *Loss limitation rule for transitional parent.* No deduction is allowed for any loss recognized by a member of a consolidated group with respect to the disposition of stock of a transitional parent.

(2) *Allowable loss*—(i) *In general.* Paragraph (b)(1) of this section does not apply to the extent the taxpayer establishes that the loss exceeds the amount that would be disallowed under paragraph (a) of this section if each highest tier transitional subsidiary's stock in which the transitional parent has a direct or indirect interest had been sold immediately before the disposition of the transitional parent's stock. In applying the preceding sentence, appropriate adjustments shall be made to take into account circumstances where less than all the stock of a transitional parent owned by members of a consolidated group is disposed of in the same transaction, or the stock of a transitional subsidiary or a transitional parent is directly owned by more than 1 member.

(ii) *Statement of allowable loss.* Paragraph (b)(2)(i) of this section applies only if a separate statement entitled ''Allowable Loss Under Section 1.337(d)–1(b)'' is filed with the taxpayer's return for the year of the stock disposition. If the separate statement is required to be filed with a return the due date (including extensions) of which is before January 16, 1991, or with a return due (including extensions) after January 15, 1991 but filed before that date, the statement may be filed with an amended return for the year of the disposition or with the taxpayer's first subsequent return the due date (including extensions) of which is after January 15, 1991.

(iii) *Contents of statement.* The statement required under paragraph (b)(2)(ii) of this section must contain—

(A) The name and employer identification number (E.I.N.) of the transitional parent.

(B) The basis of the stock of the transitional parent immediately before the disposition.

(C) The amount realized on the disposition.

(D) The amount of the deduction not disallowed under paragraph (b)(1) of this section by reason of this paragraph (b)(2).

(E) The amount of loss disallowed under paragraph (b)(1) of this section.

(3) *Coordination with loss deferral and other disallowance rules.* (i) For purposes of this section, the rules of § 1.1502–20(a)(3) apply, with appropriate adjustments to reflect differences between the approach of this section and that of § 1.1502–20.

(ii) *Other loss deferral rules.* If paragraph (b)(1) of this section applies to a loss subject to deferral or disallowance under any other provision of the Code or the regulations, the other provision applies to the loss only to the extent it is not disallowed under paragraph (b)(1).

(4) *Definitions.* For purposes of this section—

(i) *Transitional parent* means any subsidiary, other than a transitional subsidiary, that owned at any time after January 6, 1987, a direct or indirect interest in the stock of a corporation that is a transitional subsidiary.

(ii) *Highest tier transitional subsidiary* means the transitional subsidiary (or subsidiaries) in which the transitional parent has a direct or indirect interest and that is the highest transitional subsidiary (or subsidiaries) in a chain of members.

(5) *Examples.* The principles of this paragraph (b) are illustrated by the following examples:

Example 1. Ownership of chain of transitional subsidiaries. (i) P forms S with $200 on January 1, 1985, and S becomes a member of the P group. On February 1, 1987, S buys all the stock of T, and T buys all the stock of T1, and both T and T1 become members of the P group. On January 1, 1988, P sells all the

stock of S and recognizes a $90 loss on the sale.

(ii) Under paragraph (a)(4)(ii) of this section, both T and T1 are transitional subsidiaries, because they became members of the P group after January 6, 1987. Under paragraph (b)(4)(i) of this section, S is a transitional parent, because it owns a direct interest in stock of transitional subsidiaries and is not itself a transitional subsidiary.

(iii) Under paragraph (b) (1) and (2) of this section, because S is a transitional parent, no deduction is allowed to P for its $90 loss except to the extent the loss exceeds the amount of S's loss that would have been disallowed if S had sold all the stock of T, S's highest tier transitional subsidiary, immediately before P's sale of all the S stock. Assume all the T stock would have been sold for a $90 loss and that all the loss would be attributable to the recognition of built-in gain from the disposition of assets. Because in that case $90 of loss would be disallowed, all of P's loss on the sale of the S stock is disallowed under paragraph (b).

Example 2. Ownership of brother-sister transitional subsidiaries.

(i) P forms S with $200 on January 1, 1985, and S becomes a member of the P group. On February 1, 1987, S buys all the stock of both T and T1, and T and T1 become members of the P group. On January 1, 1988, P sells all the stock of S and recognizes a $90 loss on the sale.

(ii) Under paragraph (b) (1) and (2) of this section, no deduction is allowed to P for its $90 loss except to the extent P establishes that the loss exceeds the amount of S's stock losses that would be disallowed if S sold all the stock of T and T1, S's highest tier transitional subsidiaries, immediately before P's sale of all the S stock. Assume that all the T stock would have been sold for a $50 loss, all the T1 stock of a $40 loss, and that the entire amount of each loss would be attributable to the recognition of built-in gain on the disposition of assets. Because $90 of loss would be disallowed with respect to the sale of S's T and T1 stock, P's $90 loss on the sale of all the S stock is disallowed under paragraph (b).

(c) *Successors*—(1) *General rule.* This section applies, to the extent necessary to effectuate the purposes of this section, to—

(i) Any property owned by a member or former member, the basis of which is determined, directly or indirectly, in whole or in part, by reference to the basis in a subsidiary's stock, and

(ii) Any property owned by any other person whose basis in the property is determined, directly or indirectly, in whole or in part, by reference to a member's (or former member's) basis in a subsidiary's stock.

(2) *Examples.* The principles of this paragraph (c) are illustrated by the following examples:

Example 1. Merger into grandfathered subsidiary. P, the common parent of a group, owns all the stock of T, a transitional subsidiary. On January 1, 1989, T merges into S, a wholly owned subsidiary of P that is not a transitional subsidiary. Under paragraph (c)(1) of this section, all the stock of S is treated as stock of a transitional subsidiary. As a result, no deduction is allowed for any loss recognized by P on the disposition of any S stock, except to the extent the P group establishes under paragraph (a)(2) that the loss is not attributable to the recognition of built-in gain on the disposition of assets of T.

Example 2. Nonrecognition exchange of transitional stock.

(i) P, the common parent of a group, owns all the stock of T, a transitional subsidiary. On January 1, 1989, P transfers the stock of T to X, a corporation that is not a member of the P group, in exchange for 20 percent of its stock in a transaction to which section 351(a) applies. T and X file separate returns.

(ii) Under paragraph (c)(1) of this section, all the stock of X owned by P is treated as stock of a transitional subsidiary because P's basis for the X stock is determined by reference to its basis for the T stock. As a result, no deduction is allowed to P for any loss recognized on the disposition of the X stock, except to the extent permitted under paragraph (a) of this section.

(iii) Under paragraph (c)(1), X is treated as a member subject to paragraph (a) of this section with respect to the T stock because X's basis for the stock is determined by reference to P's basis for the stock. Moreover, all of the T stock owned by X continues to be stock of a transitional subsidiary. As a result, no deduction is allowed to X for any loss recognized on the disposition of any T stock, except to the extent permitted under paragraph (a) of this section.

(d) *Investment adjustments and earnings and profits*—(1) *In general.* For purposes of determining investment adjustments under § 1.1502–32 and earnings and profits under § 1.1502–33(c) with respect to a member of a consolidated group that owns stock in a subsidiary, any deduction that is disallowed under this section is treated as a loss arising and absorbed by the member in the tax year in which the disallowance occurs.

(2) *Example.* (i) In 1986, P forms S with a contribution of $100, and S becomes a member of the P group. On February 1, 1987, S

buys all the stock of T for $100. T has an asset with a basis of $0 and a value of $100. In 1988, T sells the asset for $100. Under the investment adjustment system, S's basis in the T stock increases to adjustment system, S's basis in the T stock increases to $200, P's basis in the S stock increases to $200, and P's earnings and profits and S's earnings and profits increase by $100. In 1989, S sells all of the T stock for $100, and S's recognized loss of $100 is disallowed under paragraph (a)(1) of this section.

(ii) Under paragraph (d)(1) of this section, S's earnings and profits for 1989 are reduced by $100, the amount of the loss disallowed under paragraph (a)(1). As a result, P's basis in the S stock is reduced from $200 to $100 under the investment adjustment system. P's earnings and profits for 1989 are correspondingly reduced by $100.

(e) *Effective dates*—(1) *General rule.* This section applies with respect to dispositions after January 6, 1987. For dispositions on or after November 19, 1990, however, this section applies only if the stock was deconsolidated (as that term is defined in § 1.337(d)–2(b)(2)) before November 19, 1990, and only to the extent the disposition is not subject to § 1.337(d)–2 or § 1.1502–20.

(2) *Binding contract rule.* For purposes of this paragraph (e), if a corporation became a subsidiary pursuant to a binding written contract entered into before January 6, 1987, and in continuous effect until the corporation became a subsidiary, or a disposition was pursuant to a binding written contract entered into before March 9, 1990, and in continuous effect until the disposition, the date the contract became binding shall be treated as the date the corporation became a subsidiary or as the date of disposition.

(3) *Application of § 1.1502–20T to certain transactions*—(i) *In general.* If a group files the certification described in paragraph (e)(3)(ii) of this section, it may apply § 1.1502–20T (as contained in the CFR edition revised as of April 1, 1990), to all of its members with respect to all dispositions and deconsolidations by the certifying group to which § 1.1502–20T otherwise applied by its terms occurring—

(A) On or after March 9, 1990 (but only if not pursuant to a binding contract described in § 1.337(d)–1T(e)(2) (as contained in the CFR edition revised as of April 1, 1990) that was entered into before March 9, 1990); and

(B) Before November 19, 1990 (or thereafter, if pursuant to a binding contract described in § 1.1502–20T(g)(3) that was entered into on or after March 9, 1990 and before November 19, 1990).

The certification under this paragraph (e)(3)(i) with respect to the application of § 1.1502–20T to any transaction described in this paragraph (e)(3)(i) may not be withdrawn and, if the certification is filed, § 1.1502–20T must be applied to all such transactions on all returns (including amended returns) on which such transactions are included.

(ii) *Time and manner of filing certification.* The certification described in paragraph (e)(3)(i) of this section must be made in a separate statement entitled ''[insert name and employer identification number of common parent] hereby certifies under § 1.337(d)–1 (e)(3) that the group of which it is the common parent is applying § 1.1502–20T to all transactions to which that section otherwise applied by it terms.'' The statement must be signed by the common parent and filed with the group's income tax return for the taxable year of the first disposition or deconsolidation to which the certification applies. If the separate statement required under this paragraph (e)(3) is to be filed with a return the due date (including extensions) of which is before November 16, 1991, the statement may be filed with an amended return for the year of the disposition or deconsolidation that is filed within 180 days after September 13, 1991. Any other filings required under § 1.1502–20T, such as the statement required under § 1.1502–20T(f)(5), may be made with the amended return, regardless of whether § 1.1502–20T permits such filing by amended return.

[T.D. 8319, 55 FR 49031, Nov. 26, 1990, as amended by T.D. 8364, 56 FR 47389, Sept. 19, 1991; 57 FR 53550, Nov. 12, 1992; T.D. 8560, 59 FR 41674, 41675, Aug. 15, 1994; T.D. 8597, 60 FR 36679, July 18, 1995]

§ 1.337(d)–1T [Reserved]

§ 1.337(d)–2 Loss limitation window period.

(a) *Loss disallowance*—(1) *General rule.* No deduction is allowed for any loss

recognized by a member of a consolidated group with respect to the disposition of stock of a subsidiary.

(2) *Definitions.* For purposes of this section—

(i) The definitions in § 1.1502–1 apply.

(ii) *Disposition* means any event in which gain or loss is recognized, in whole or in part.

(3) *Coordination with loss deferral and other disallowance rules.* For purposes of this section, the rules of § 1.1502–20(a)(3) apply, with appropriate adjustments to reflect differences between the approach of this section and that of § 1.1502–20.

(b) *Basis reduction on deconsolidation*—(1) *General rule.* If the basis of a member of a consolidated group in a share of stock of a subsidiary exceeds its value immediately before a deconsolidation of the share, the basis of the share is reduced at that time to an amount equal to its value. If both a disposition and a deconsolidation occur with respect to a share in the same transaction, paragraph (a) of this section applies and, to the extent necessary to effectuate the purposes of this section, this paragraph (b) applies following the application of paragraph (a) of this section.

(2) *Deconsolidation.* ''Deconsolidation'' means any event that causes a share of stock of a subsidiary that remains outstanding to be no longer owned by a member of any consolidated group of which the subsidiary is also a member.

(3) *Value.* ''Value'' means fair market value.

(4) *Loss within 2 years after basis reduction*—(i) *In general.* If a share is deconsolidated and a direct or indirect disposition of the share occurs within 2 years after the date of the deconsolidation, a separate statement entitled ''statement pursuant to § 1.337(d)–2(b)(4)'' must be filed with the taxpayer's return for the year of disposition. If the taxpayer fails to file the statement as required, no deduction is allowed for any loss recognized with respect to the disposition. If the separate statement is required to be filed with a return the due date (including extensions) of which is before January 16, 1991, or with a return due (including extensions) after January 15, 1991 but filed before that date, the statement may be filed with an amended return for the year of the disposition or with the taxpayer's first subsequent return the due date (including extensions) of which is after January 15, 1991. A disposition after the 2-year period described in this paragraph (b)(4) that is pursuant to an agreement, option, or other arrangement entered into within the 2-year period is treated as a disposition within the 2-year period for purposes of this section.

(ii) *Contents of statement.* The statement required under paragraph (b)(4)(i) of this section must contain—

(A) The name and employer identification number (E.I.N.) of the subsidiary.

(B) The amount of prior basis reduction with respect to the stock of the subsidiary under paragraph (b)(1) of this section.

(C) The basis of the stock of the subsidiary immediately before the disposition.

(D) The amount realized on the disposition.

(E) The amount of the loss recognized on the disposition.

(c) *Allowable loss*—(1) *Application.* This paragraph (c) applies with respect to stock of a subsidiary only if—

(i) Before February 1, 1991, the consolidated group either—

(A) Disposes (in one or more transactions) of its entire equity interest in the subsidiary to persons not related to any member of the consoldiated group within the meaning of section 267(b) or section 707(b)(1) (substituting ''10 percent'' for ''50 percent'' each place that it appears); or

(B) Sustains a worthless stock loss under section 165(g); and

(ii) A separate statement entitled ''allowed loss under § 1.337(d)–2(c)'' is filed in accordance with paragraph (c)(3) of this section.

(2) *General rule.* Loss is not disallowed under paragraph (a)(1) of this section and basis is not reduced under paragraph (b)(1) of this section to the extent the taxpayer establishes that the loss or basis is not attributable to the recognition of built-in gain on the disposition of an asset (including stock and securities). Loss or basis may be attributable to the recognition of

built-in gain on the disposition of an asset by a prior group. For purposes of this section, gain recognized on the disposition of an asset is built-in gain to the extent attributable, directly or indirectly, in whole or in part, to any excess of value over basis that is reflected, before the disposition of the asset, in the basis of the share, directly or indirectly, in whole or in part, after applying section 1503(e) and other applicable provisions of the Code and regulations.

(3) *Contents of statement and time of filing.* The statement required under paragraph (c)(1)(ii) of this section must be filed with the taxpayer's return for the year of the disposition or deconsolidation, and must contain—

(i) The name and employer identification number (E.I.N.) of the subsidiary.

(ii) The basis of the stock of the subsidiary immediately before the disposition or deconsolidation.

(iii) The amount realized on the disposition and the amount of fair market value on the deconsolidation.

(iv) The amount of the deduction not disallowed under paragraph (a)(1) of this section by reason of this paragraph (c) and the amount of basis not reduced under paragraph (b)(1) of this section by reason of this paragraph (c).

(v) The amount of loss disallowed under paragraph (a)(1) of this section and the amount of basis reduced under paragraph (b)(1) of this section.

If the separate statement is required to be filed with a return the due date (including extensions) of which is before January 16, 1991, or with a return due (including extensions) after January 15, 1991 but filed before that date, the statement may be filed with an amended return for the year of the disposition or deconsolidation or with the taxpayer's first subsequent return the due date (including extensions) of which is after January 15, 1991.

(4) *Example.* The principles of paragraphs (a), (b), and (c) of this section are illustrated by the examples in §§ 1.337(d)–1(a) and 1.1502–20(a) (other than *Examples 3, 4,* and *5*) and (b), with appropriate adjustments to reflect differences between the approach of this section and that of § 1.1502–20, and by the following example. For purposes of the examples in this section, unless otherwise stated, the group files consolidated returns on a calendar year basis, the facts set forth the only corporate activity, and all sales and purchases are with unrelated buyers or sellers. The basis of each asset is the same for determining earnings and profits adjustments and taxable income. Tax liability and its effect on basis, value, and earnings and profits are disregarded. *Investment adjustment system* means the rules of § 1.1502–32.

Example. Loss offsetting built-in gain in a prior group. (i) P buys all the stock of T for $50 in Year 1, and T becomes a member of the P group. T has 2 assets. Asset 1 has a basis of $50 and a value of $0, and asset 2 has a basis of $0 and a value of $50. T sells asset 2 during Year 3 for $50, and recognizes a $50 gain. Under the investment adjustment system, P's basis in the T stock increases to $100 as a result of the recognition of gain. In year 5, all of the stock of P is acquired by the P1 group, and the former members of the P group become members of the P1 group. T then sells asset 1 for $0, and recognizes a $50 loss. Under the investment adjustment system. P's basis in the T stock decreases to $50 as a result of the loss. T's assets decline in value from $50 to $40. P then sells all the stock of T for $40 and recognizes a $10 loss.

(ii) P's basis in the T stock reflects both T's unrecognized gain and unrecognized loss with respect to its assets. The gain T recognizes on the disposition of asset 2 is built-in gain with respect to both the P and the P1 groups for purposes of paragraph (c)(2) of this section. In addition, the loss T recognizes on the disposition of asset 2 is built-in loss with respect to the P and P1 groups for purposes of paragraph (c)(2) of this section. T's recognition of the built-in loss while a member of the P1 group offsets the effect on T's stock basis of T's recognition of the built-in gain while a member of the P group. Thus, P's $10 loss on the sale of the T stock is not attributable to the recognition of built-in gain, and the loss is therefore not disallowed under paragraph (c)(2) of this section.

(iii) The result would be the same if, instead of having a $50 built-in loss in asset 2 when it becomes a member of the P group, T has a $50 net operating loss carryover and the carryover is used by the P group.

(d) *Successors.* For purposes of this section, the rules and examples of § 1.1502–20(d) apply, with appropriate adjustments to reflect differences between the approach of this section and that of § 1.1502–20.

(e) *Anti-avoidance rules.* For purposes of this section, the rules and examples

of § 1.1502–20(e) apply, with appropriate adjustments to reflect differences between the approach of this section and that of § 1.1502–20.

(f) *Investment adjustments and earnings and profits.* For purposes of this section, the rules and examples of § 1.1502–20 (f) apply, with appropriate adjustments to reflect differences between the approach of this section and that of § 1.1502–20.

(g) *Effective dates*—(1) *General rule.* Except as otherwise provided in this paragraph (g), this section applies with respect to dispositions and deconsolidations on or after November 19, 1990, but only to the extent the disposition or deconsolidation is not subject to § 1.1502–20. For this purpose, dispositions deferred under §§ 1.1502–13 and 1.1502–14 (as contained in the 26 CFR part 1 edition revised as of April 1, 1995) are deemed to occur at the time the deferred gain or loss is taken into account unless the stock was deconsolidated before November 19, 1990. If stock of a subsidiary became worthless during a taxable year including November 19, 1990, the disposition with respect to the stock is treated as occurring on the date the stock became worthless.

(2) *Binding contract rule.* For purposes of this paragraph (g), if a disposition or deconsolidation is pursuant to a binding written contract entered into before March 9, 1990, and in continuous effect until the disposition or deconsolidation, the date the contract became binding is treated as the date of the disposition or deconsolidation.

(3) *Application of § 1.1502–20T to certain transactions*—(i) *In general.* If a group files the certification described in paragraph (g)(3)(ii) of this section, it may apply § 1.1502–20T (as contained in the CFR edition revised as of April 1, 1990), to all of its members with respect to all dispositions and deconsolidations by the certifying group to which § 1.1502–20T otherwise applied by its terms occurring—

(A) On or after March 9, 1990 (but only if not pursuant to a binding contract described in § 1.337(d)–1T(e)(2) (as contained in the CFR edition revised as of April 1, 1990) that was entered into before March 9, 1990); and

(B) Before November 19, 1990 (or thereafter, if pursuant to a binding contract described in § 1.1502–20T(g)(3) that was entered into on or after March 9, 1990 and before November 19, 1990).

The certification under this paragraph (g)(3)(i) with respect to the application of § 1.1502–20T to any transaction described in this paragraph (g)(3)(i) may not be withdrawn and, if the certification is filed, § 1.1502–20T must be applied to all such transactions on all returns (including amended returns) on which such transactions are included.

(ii) *Time and manner of filing certification.* The certification described in paragraph (g)(3)(i) of this section must be made in a separate statement entitled ''[insert name and employer identification number of common parent] hereby certifies under § 1.337(d)–2(g)(3) that the group of which it is the common parent is applying § 1.1502–20T to all transactions to which that section otherwise applied by its terms.'' The statement must be signed by the common parent and filed with the group's income tax return for the taxable year of the first disposition or deconsolidation to which the certification applies. If the separate statement required under this paragraph (g)(3) is to be filed with a return the due date (including extensions) of which is before November 16, 1991, the statement may be filed with an amended return for the year of the disposition or deconsolidation that is filed within 180 days after September 13, 1991. Any other filings required under § 1.1502–20T, such as the statement required under § 1.1502–20T(f)(5), may be made with the amended return, regardless of whether § 1.1502–20T permits such filing by amended return.

[T.D. 8364, 56 FR 47390, Sept. 19, 1991; 57 FR 53550, Nov. 12, 1992; T.D. 8560, 59 FR 41674, Aug. 15, 1994; T.D. 8597, 60 FR 36679, July 18, 1995]

§ 1.338–0 Outline of topics.

This section lists the captions contained in the regulations under section 338.

§ 1.338–1 Elections under section 338.

(a) Scope.
(b) Nomenclature.

(c) Definitions.
(1) Acquisition date.
(2) Affiliated group.
(3) Common parent.
(4) Consistency period.
(5) Domestic corporation.
(6) Old target's final return.
(7) Purchasing corporation.
(8) Qualified stock purchase.
(9) Related persons.
(10) Section 338 election.
(11) Section 338(h)(10) election.
(12) Selling group.
(13) Target; old target; new target.
(14) Target affiliate.
(15) 12-month acquisition period.
(d) Time and manner of making election.
(e) Returns including tax liability from deemed sale.
(1) In general.
(2) Old target's final taxable year otherwise included in consolidated return of selling group.
(i) General rule.
(ii) Separate taxable year.
(iii) Carryover and carryback of tax attributes.
(iv) Old target is a component member of purchasing corporation's controlled group.
(3) Old target an S corporation.
(4) Combined deemed sale return.
(i) General rule.
(ii) Gain and loss offsets.
(iii) Procedure for filing a combined return.
(iv) Consequences of filing a combined return.
(5) Deemed sale excluded from purchasing corporation's consolidated return.
(6) Due date for old target's final return.
(i) General rule.
(ii) Application of § 1.1502–76(c).
(A) In general.
(B) Deemed extension.
(C) Erroneous filing of deemed sale return.
(D) Erroneous filing of return for regular tax year.
(E) Last date for payment of tax.
(7) Examples.
(f) Waiver.
(1) Certain additions to tax.
(2) Notification.
(3) Elections or other actions required to be specified on a timely filed return.
(i) In general.
(ii) New target in purchasing corporation's consolidated return.
(4) Examples.
(g) Special rules for foreign corporations or DISCs.
(1) Elections by certain foreign purchasing corporations.
(i) General rule.
(ii) Qualifying foreign purchasing corporation.
(iii) Qualifying foreign target.
(iv) Triggering event.
(v) Subject to United States tax.
(2) Acquisition period.
(3) Statement of section 338 election may be filed by United States shareholders in certain cases.
(4) Notice requirement for U.S. persons holding stock in foreign target.
(i) General rule.
(ii) Limitation.
(iii) Form of notice.
(iv) Timing of notice.
(v) Consequence of failure to comply.
(vi) Good faith effort to comply.

§ 1.338–2 Miscellaneous issues under section 338.

(a) Scope.
(b) Rules relating to qualified stock purchases.
(1) Purchasing corporation requirement.
(2) Purchase.
(i) Definition.
(ii) Examples.
(3) Date of purchase from related corporations.
(i) In general.
(ii) Examples.
(4) Acquisition date for tiered targets.
(i) Stock sold in deemed asset sale.
(ii) Examples.
(5) Effect of redemptions.
(i) General rule.
(ii) Redemptions from persons unrelated to the purchasing corporation.
(iii) Redemptions from the purchasing corporation or related persons during 12-month acquisition period.
(A) General rule.
(B) Exception for certain redemptions from related corporations.
(iv) Examples.
(c) Effect of post-acquisition events on eligibility for section 338 election.
(1) Post-acquisition elimination of target.
(2) Post-acquisition elimination of the purchasing corporation.
(3) Consequences of post-acquisition elimination of target.
(i) Scope.
(ii) Continuity of interest.
(iii) Control requirement.
(iv) Example.
(v) Effective date.
(d) Miscellaneous matters affecting new target.
(1) General rule for subtitle A.
(2) Exceptions for subtitle A.
(3) Taxable year of new target.
(4) General rule for other provisions of the Internal Revenue Code.

§ 1.338–3 Deemed sale and aggregate deemed sale price.

(a) Scope.
(b) Definitions.
(1) ADSP.

(2) Allocable ADSP amount.
(3) Deemed sale gain.
(4) Classes of assets.
(c) Deemed sale of target affiliate stock.
(1) In general.
(2) General rule.
(3) Deemed sale of foreign target affiliate by a domestic target.
(4) Deemed sale producing effectively connected income.
(5) Deemed sale of insurance company target affiliate electing under section 953(d).
(6) Deemed sale of DISC target affiliate.
(7) Anti-stuffing rule.
(8) Examples.
(d) Determination of ADSP.
(1) General rule.
(2) Grossed-up basis of the purchasing corporation's recently purchased target stock.
(3) Liabilities.
(4) Other relevant items.
(5) Calculation of deemed sale gain and loss.
(6) Other rules apply in determining ADSP.
(7) Cross reference.
(8) Examples.

§ 1.338–4 Asset and stock consistency.

(a) Introduction.
(1) Overview.
(2) General application.
(3) Extensions of the general rules.
(4) Application where certain dividends are paid.
(5) Application to foreign target affiliates.
(6) Stock consistency.
(b) Consistency for direct acquisitions.
(1) General rule.
(2) Section 338(h)(10) elections.
(c) Gain from disposition reflected in basis of target stock.
(1) General rule.
(2) Gain not reflected if section 338 election made for target.
(3) Gain reflected by reason of distributions.
(4) Controlled foreign corporations.
(5) Gain recognized outside the consolidated group.
(d) Basis of acquired assets.
(1) Carryover basis rule.
(2) Exceptions to carryover basis rule for certain assets.
(3) Exception to carryover basis rule for de minimis assets.
(4) Mitigation rule.
(i) General rule.
(ii) Time for transfer.
(e) Examples.
(1) In general.
(2) Direct acquisitions.
(f) Extension of consistency to indirect acquisitions.
(1) Introduction.
(2) General rule.
(3) Basis of acquired assets.
(4) Examples.
(g) Extension of consistency if dividends qualifying for 100 percent dividends received deduction are paid.
(1) General rule for direct acquisitions from target.
(2) Other direct acquisitions having same effect.
(3) Indirect acquisitions.
(4) Examples.
(h) Consistency for target affiliates that are controlled foreign corporations.
(1) In general.
(2) Income or gain resulting from asset dispositions.
(i) General rule.
(ii) Basis of controlled foreign corporation stock.
(iii) Operating rule.
(iv) Increase in asset or stock basis.
(3) Stock issued by target affiliate that is a controlled foreign corporation.
(4) Certain distributions.
(i) General rule.
(ii) Basis of controlled foreign corporation stock.
(iii) Increase in asset or stock basis.
(5) Examples.
(i) [Reserved]
(j) Anti-avoidance rules.
(1) Extension of consistency period.
(2) Qualified stock purchase and 12-month acquisition period.
(3) Acquisitions by conduits.
(i) Asset ownership.
(A) General rule.
(B) Application of carryover basis rule.
(ii) Stock acquisitions.
(A) Purchase by conduit.
(B) Purchase of conduit by corporation.
(C) Purchase of conduit by conduit.
(4) Conduit.
(5) Existence of arrangement.
(6) Predecessor and successor.
(i) Persons.
(ii) Assets.
(7) Examples.

§ 1.338–5 International aspects of section 338.

(a) Scope.
(b) Application of section 338 to foreign targets.
(1) In general.
(2) Ownership of FT stock on the acquisition date.
(3) Carryover FT stock.
(i) Definition.
(ii) Carryover of earnings and profits.
(iii) Cap on carryover of earnings and profits.
(iv) Post-acquisition date distribution of old FT earnings and profits.
(v) Old FT earnings and profits unaffected by post-acquisition date deficits.
(vi) Character of FT stock as carryover FT stock eliminated upon disposition.
(4) Passive foreign investment company stock.

(c) Dividend treatment under section 1248(e).
(d) Allocation of foreign taxes.
(e) Operation of section 338(h)(16). [Reserved]
(f) Examples.

§ 1.338(b)–1 Adjusted grossed-up basis.

(a) Scope.
(b) Adjustment events.
(c) AGUB.
(1) In general.
(2) Time when AGUB determined.
(d) Grossed-up basis of recently purchased stock.
(1) General rule.
(2) Application.
(e) Basis of nonrecently purchased stock.
(1) In general.
(2) Effect of gain recognition election.
(i) In general.
(ii) Basis amount.
(iii) Losses not recognized.
(iv) Stock subject to election.
(3) Procedure for making gain recognition election.
(i) In general.
(ii) Section 338(h)(10) election.
(4) Comparison with ADSP formula.
(f) Liabilities of new target.
(1) In general.
(2) Excluded obligations.
(i) In general.
(ii) Time when excluded obligations taken into account.
(3) Liabilities taken into account in determining amount realized on subsequent disposition.
(g) Other relevant items.
(1) In general.
(2) Flow-through of relevant item adjustment to target subsidiary.
(3) Adjustments by the Internal Revenue Service.
(h) Examples.

§ 1.338(b)–2T Allocation of adjusted grossed-up basis among target assets (temporary).

(a) Introduction.
(1) In general.
(2) Fair market value.
(b) General rule for allocating adjusted grossed-up basis.
(1) Cash and other items designated by the Internal Revenue Service.
(2) Other assets.
(i) In general.
(ii) Class II assets.
(iii) Class III assets.
(iv) Class IV assets.
(v) Class V assets.
(c) Certain limitations and special rules for basis allocable to an asset.
(1) Basis not to exceed fair market value.
(2) Assets subject to other limitations.
(3) Special rule for allocating adjusted grossed-up basis when purchasing corporation has nonrecently purchased stock.
(i) Scope.
(ii) Determination of hypothetical purchase price.
(iii) Allocation of adjusted grossed-up basis.
(4) Effective dates.
(d) Examples.

§ 1.338(b)–3T Subsequent adjustments to adjusted grossed-up basis (temporary).

(a) Scope.
(1) In general.
(2) Exceptions to applicability of section.
(3) Adjustment of aggregate deemed sale price.
(b) Definitions.
(1) Contingent liability.
(2) Contingent amount.
(3) Reduction amount.
(4) Acquisition date asset.
(c) General rule.
(1) Time when increases in adjusted grossed-up basis taken into account.
(2) Time when decreases in adjusted grossed-up basis taken into account.
(3) Amount of increases and decreases in adjusted grossed-up basis.
(d) Allocation of increases in adjusted grossed-up basis.
(1) In general.
(2) Effect of disposition or depreciation of acquisition date assets.
(e) Allocation of decreases in adjusted grossed-up basis.
(1) In general.
(2) Effect of disposition of assets or reduction of basis below zero.
(3) Section 338 property.
(f) Special rule for allocation of increases (or decreases) in adjusted grossed-up basis when hypothetical purchase price was used in allocating adjusted grossed-up basis.
(1) Scope.
(2) Allocation of increases (decreases) in adjusted grossed-up basis.
(3) Allocation to contingent income assets.
(g) Special rule for allocation of increases (decreases) in adjusted grossed-up basis to specific assets.
(1) Patents and similar property.
(i) Scope.
(ii) Specific allocation.
(2) Internal Revenue Service authority.
(h) Changes in old target's aggregate deemed sale price of assets.
(1) General rule.
(i) In general.
(ii) Redetermination of aggregate deemed sale price if the elective formula under section 338(h)(11) is used.
(iii) Redetermination of aggregate deemed sale price if the elective formula under section 338(h)(11) is not used.

(2) Procedure for transactions in which section 338(h)(10) is not elected.
(i) Income or loss included in new target's return.
(ii) Carryovers and carrybacks.
(A) Loss carryovers to new target taxable years.
(B) Loss carrybacks to taxable years of old target.
(C) Credit carryovers and carrybacks.
(3) Procedure for transactions in which section 338(h)(10) is elected.
(i) [Reserved.]
(j) Examples.

§ 1.338(h)(10)–1 Deemed asset sale and liquidation.

(a) Scope.
(b) Nomenclature.
(c) Definitions.
(1) Section 338(h)(10) target.
(2) S corporation shareholders.
(3) Selling consolidated group.
(4) Selling affiliate.
(d) Section 338(h)(10) election.
(1) In general.
(2) Simultaneous joint election requirement.
(3) Irrevocability.
(4) Effect of invalid election.
(e) Certain consequences of section 338(h)(10) election.
(1) Old T.
(2) Selling consolidated group, selling affiliate, or S corporation shareholders.
(i) In general.
(ii) Deemed liquidation of old T.
(iii) Basis of stock not acquired.
(iv) T stock sale.
(v) Example.
(3) Certain minority shareholders.
(i) In general.
(ii) T stock sale.
(iii) T stock not acquired.
(4) P.
(5) New T.
(6) Consolidated return of selling consolidated group.
(f) Deemed sale price.
(1) General rule.
(2) Formula.
(3) Liabilities.
(4) Other relevant items.
(5) Cross-reference.
(g) Examples.
(h) Inapplicability of provisions.

§ 1.338(i)–1 Effective dates.

(a) In general.
(b) Elective retroactive application.
(c) MADSP.
(d) Deemed election.

[T.D. 8515, 59 FR 2960, Jan. 20. 1994, as amended by T.D. 8626, 60 FR 54944, Oct. 27, 1995; T.D. 8711, 62 FR 2268, Jan. 16, 1997; T.D. 8710, 62 FR 3459, Jan. 23, 1997]

§ 1.338–1 Elections under section 338.

(a) *Scope.* This section prescribes rules relating to elections under section 338. Paragraphs (c)(6), (e), and (g) of this section do not apply to a target for which a section 338(h)(10) election is made.

(b) *Nomenclature.* For purposes of the regulations under section 338 (except as otherwise provided):

(1) T is a domestic corporation that has only one class of stock outstanding.

(2) P is a domestic corporation that purchases stock of T in a qualified stock purchase.

(3) The P group is an affiliated group of which P is a member.

(4) P1, P2, etc., are domestic corporations that are members of the P group.

(5) T1, T2, etc., are domestic corporations that are target affiliates of T. These corporations (T1, T2, etc.) have only one class of stock outstanding and may also be targets.

(6) S is a domestic corporation (unrelated to P and B) that owns T prior to the purchase of T by P. (S is referred to in cases in which it is appropriate to consider the effects of having all of the outstanding stock of T owned by a domestic corporation.)

(7) A, a U.S. resident or citizen, is an individual (unrelated to P and B) who owns T prior to the purchase of T by P. (A is referred to in cases in which it is appropriate to consider the effects of having all of the outstanding stock of T owned by an individual who is a U.S. resident or citizen. Ownership of T by A and ownership of T by S are mutually exclusive circumstances.)

(8) B, a U.S. resident or citizen, is an individual (unrelated to T, S, and A) who owns the stock of P.

(9) F, used as a prefix with the other terms in this paragraph (b), connotes foreign, rather than domestic, status. For example, FT is a foreign corporation (as defined in section 7701(a)(5)) and FA is an individual other than a U.S. citizen or resident.

(10) CFC, used as a prefix with the other terms in this paragraph (b) referring to a corporation, connotes a controlled foreign corporation (as defined in section 957, taking into account section 953(c)). A corporation identified with the prefix F may be a controlled

foreign corporation. The prefix CFC is used when the corporation's status as a controlled foreign corporation is significant.

(c) *Definitions.* For purposes of the regulations under section 338 (except as otherwise provided):

(1) *Acquisition date.* The term *acquisition date* has the same meaning as in section 338(h)(2).

(2) *Affiliated group.* The term *affiliated group* has the same meaning as in section 338(h)(5). Corporations are affiliated on any day they are members of the same affiliated group with each other.

(3) *Common parent.* The term *common parent* has the same meaning as in section 1504.

(4) *Consistency period.* The *consistency period* is the period described in section 338(h)(4)(A) unless extended pursuant to § 1.338–4(j)(1).

(5) *Domestic corporation.* A *domestic* corporation is a corporation—

(i) That is domestic within the meaning of section 7701(a)(4) or that is treated as domestic for purposes of subtitle A of the Internal Revenue Code (e.g., to which an election under section 953(d) or 1504(d) applies); and

(ii) That is not a DISC, a corporation described in section 1248(e), or a corporation to which an election under section 936 applies.

(6) *Old target's final return. Old target's final return* is the income tax return of old target for the taxable year ending at the close of the acquisition date that includes the deemed sale of assets under section 338. If the disaffiliation rule of paragraph (e)(2)(i) of this section applies, target's *deemed sale return* is considered old target's final return.

(7) *Purchasing corporation.* The term *purchasing corporation* has the same meaning as in section 338(d)(1). Unless otherwise provided, any reference to the purchasing corporation is a reference to all members of the affiliated group of which the purchasing corporation is a member. See sections 338(h) (5) and (8).

(8) *Qualified stock purchase.* The term *qualified stock purchase* has the same meaning as in section 338(d)(3).

(9) *Related persons.* Two persons are related if stock in a corporation owned by one of the persons would be attributed under section 318(a) (other than section 318(a)(4)) to the other.

(10) *Section 338 election.* A *section 338 election* is an election to apply section 338(a) to target. A section 338 election may be made by filing a statement of section 338 election pursuant to § 1.338–1(d). The form on which this statement is filed is referred to in the regulations under section 338 as the *Form 8023.*

(11) *Section 338(h)(10) election.* A *section 338(h)(10) election* is an election to apply section 338(h)(10) to target. A section 338(h)(10) election may be made by making a joint election for target under § 1.338(h)(10)–1.

(12) *Selling group.* The *selling group* is the affiliated group (as defined in section 1504) that is eligible to file a consolidated return that includes target for the target's taxable period that includes the acquisition date and that does not have a target as common parent for the taxable year including the acquisition date.

(13) *Target; old target; new target. Target* is the target corporation as defined in section 338(d)(2). *Old target* refers to target for periods ending as of the close of the date of target's deemed sale of assets. *New target* refers to target for subsequent periods.

(14) *Target affiliate.* The term *target affiliate* has the same meaning as in section 338(h)(6) (applied without section 338(h)(6)(B)(i)). Thus, a corporation described in section 338(h)(6)(B)(i) is considered a target affiliate for all purposes of section 338. If a target affiliate is acquired in a qualified stock purchase, it is also a target.

(15) *12-month acquisition period.* The *12-month acquisition period* is the period described in section 338(h)(1), unless extended pursuant to § 1.338–4(j)(2).

(d) *Time and manner of making election.* The purchasing corporation makes a section 338 election for target by filing a statement of section 338 election on Form 8023 in accordance with the instructions to the form. The section 338 election must be made not later than the 15th day of the 9th month beginning after the month in which the acquisition date occurs. A section 338 election is irrevocable.

(e) *Returns including tax liability from deemed sale*—(1) *In general.* Except as

provided in paragraphs (e)(2) and (3) of this section, any tax liability resulting from the deemed sale of assets under section 338 is included in the final return of old target filed for old target's taxable year that ends at the close of the acquisition date. If old target is the common parent of an affiliated group, the final return may be a consolidated return (any such consolidated return must also include any tax liability from any deemed sales under section 338 by subsidiaries in the consolidated group that have the same acquisition date as old target and that are acquired by the purchasing corporation).

(2) *Old target's final taxable year otherwise included in consolidated return of selling group*—(i) *General rule.* If the selling group files a consolidated return for the period that includes the acquisition date, old target is disaffiliated from that group immediately before its deemed sale of assets under section 338 and must file a separate final return that includes only the items resulting from the deemed sale and the carryover items specified in paragraph (e)(2)(iii) of this section (deemed sale return). The deemed sale occurs at the close of the acquisition date and is the last transaction of old target. Any transactions of old target occurring on the acquisition date other than the deemed sale are included in the selling group's consolidated return. A deemed sale return includes a *combined return* as defined in paragraph (e)(4) of this section.

(ii) *Separate taxable year.* The deemed sale included in the deemed sale return under this paragraph (e)(2) occurs in a separate taxable year, except that old target's taxable year of the sale and the consolidated year of the selling group that includes the acquisition date are treated as the same year for purposes of determining the number of years in a carryover or carryback period.

(iii) *Carryover and carryback of tax attributes.* Target's attributes may be carried over to, and carried back from, the deemed sale return under the rules applicable to a corporation that ceases to be a member of a consolidated group.

(iv) *Old target is a component member of purchasing corporation's controlled group.* For purposes of its deemed sale return, target is a component member of the controlled group of corporations including the purchasing corporation unless target is treated as an excluded member under section 1563(b)(2).

(3) *Old target an S corporation.* If target is an S corporation for the period that ends on the day before the acquisition date, old target must file a deemed sale return as a C corporation. For this purpose, the principles of paragraph (e)(2) of this section apply.

(4) *Combined deemed sale return*—(i) *General rule.* Under section 338(h)(15), a combined deemed sale return (combined return) may be filed for all targets from a single selling consolidated group (as defined in § 1.338(h)(10)–1(c)(3)) that are acquired by the purchasing corporation on the same acquisition date and that otherwise would be required to file separate deemed sale returns. The combined return must include all such targets. For example, T and T1 may be included in a combined return if—

(A) T and T1 are directly owned subsidiaries of S;

(B) S is the common parent of a consolidated group; and

(C) P makes qualified stock purchases of T and T1 on the same acquisition date.

(ii) *Gain and loss offsets.* Gains and losses recognized on the deemed sale of assets by targets included in a combined return are treated as the gains and losses of a single target. In addition, loss carryovers of a target that were not subject to the separate return limitation year restrictions (SRLY restrictions) of the consolidated return regulations while that target was a member of the selling consolidated group may be applied without limitation to the gains of other targets included in the combined return. If, however, a target has loss carryovers that were subject to the SRLY restrictions while that target was a member of the selling consolidated group, the use of those losses in the combined return continues to be subject to those restrictions, applied in the same manner as if the combined return were a consolidated return. A similar rule applies, when appropriate, to other tax attributes.

(iii) *Procedure for filing a combined return.* A combined return is made by filing a single corporation income tax return in lieu of separate deemed sale returns for all targets required to be included in the combined return. The combined return reflects the deemed sales of all targets required to be included in the combined return. If the targets included in the combined return constitute a single affiliated group within the meaning of section 1504(a), the income tax return is signed by an officer of the common parent of that group. Otherwise, the return must be signed by an officer of each target included in the combined return. Rules similar to the rules in § 1.1502–75(j) apply for purposes of preparing the combined return. The combined return must include an attachment prominently identified as an ''ELECTION TO FILE A COMBINED RETURN UNDER SECTION 338(h)(15).'' The attachment must—

(A) Contain the name, address, and employer identification number of each target required to be included in the combined return;

(B) Contain the following declaration (or a substantially similar declaration): ''EACH TARGET IDENTIFIED IN THIS ELECTION TO FILE A COMBINED RETURN CONSENTS TO THE FILING OF A COMBINED RETURN''; and

(C) For each target, be signed by a person who states under penalties of perjury that he or she is authorized to act on behalf of such target.

(iv) *Consequences of filing a combined return.* Each target included in a combined return is severally liable for any tax associated with the combined return. See § 1.338–2(d)(1).

(5) *Deemed sale excluded from purchasing corporation's consolidated return.* Old target may not be considered a member of any affiliated group that includes the purchasing corporation with respect to the deemed sale of target assets under section 338.

(6) *Due date for old target's final return*—(i) *General rule.* Old target's final return is generally due on the 15th day of the third calendar month following the month in which the acquisition date occurs. See section 6072 (time for filing income tax returns).

(ii) *Application of § 1.1502–76(c)*—(A) *In general.* Section 1.1502–76(c) applies to old target's final return if old target was a member of a selling group that did not file consolidated returns for the taxable year of the common parent that precedes the year that includes old target's acquisition date. If the selling group has not filed a consolidated return that includes old target's taxable period that ends on the acquisition date, target may, on or before the final return due date (including extensions), either—

(*1*) File a deemed sale return on the assumption that the selling group will file the consolidated return; or

(*2*) File a return for so much of old target's taxable period as ends at the close of the acquisition date on the assumption that the consolidated return will not be filed.

(B) *Deemed extension.* For purposes of applying § 1.1502–76(c)(2), an extension of time to file old target's final return is considered to be in effect until the last date for making the election under section 338.

(C) *Erroneous filing of deemed sale return.* If, pursuant to this paragraph (e)(6)(ii), target files a deemed sale return but the selling group does not file a consolidated return, target must file a substituted return for old target not later than the due date (including extensions) for the return of the common parent with which old target would have been included in the consolidated return. The substituted return is for so much of old target's taxable year as ends at the close of the acquisition date. Under § 1.1502–76(c)(2), the deemed sale return is not considered a return for purposes of section 6011 (relating to the general requirement of filing a return) if a substituted return must be filed.

(D) *Erroneous filing of return for regular tax year.* If, pursuant to this paragraph (e)(6)(ii), target files a return for so much of old target's regular taxable year as ends at the close of the acquisition date but the selling group files a consolidated return, target must file an amended return for old target not later than the due date (including extensions) for the selling group's consolidated return. (The amended return is a deemed sale return.)

(E) *Last date for payment of tax.* If either a substituted or amended final return of old target is filed pursuant to this paragraph (e)(6)(ii), the last date prescribed for payment of tax is the final return due date (as defined in paragraph (e)(6)(i) of this section).

(7) *Examples.* This paragraph (e) may be illustrated by the following examples:

Example 1. (a) S is the common parent of a consolidated group that includes T. The S group files calendar year consolidated returns. At the close of June 30 of Year 1, P makes a qualified stock purchase of T from S. P makes a section 338 election for T, and the deemed sale of T's assets occurs as of the close of T's acquisition date (June 30).

(b) T is considered disaffiliated for purposes of reporting the deemed sale. Accordingly, T is included in the S group's consolidated return through T's acquisition date except that the tax liability resulting from the deemed sale of assets is reported in a separate deemed sale return of T. Provided that T is not treated as an excluded member under section 1563(b)(2), T is a component member of P's controlled group for the taxable year represented by the deemed sale, and the taxable income bracket amounts available in calculating tax on the deemed sale return must be limited accordingly.

(c) If P purchased the stock of T at 10 a.m. on June 30 of Year 1, the results would be the same. See paragraph (e)(2)(i) of this section.

Example 2. The facts are the same as in *Example 1,* except that the S group does not file consolidated returns. T must file a separate return for its taxable year ending on June 30 of Year 1, which includes the deemed sale.

(f) *Waiver*—(1) *Certain additions to tax.* An addition to tax or additional amount (addition) under subchapter A of chapter 68 of the Internal Revenue Code arising on or before the last day for making the election under section 338, by reason of circumstances that would not exist but for an election under section 338, is waived if—

(i) Under the particular statute the addition is excusable upon a showing of reasonable cause; and

(ii) Corrective action is taken on or before the last day.

(2) *Notification.* The Service should be notified at the time of correction (e.g., by attaching a statement to a return that constitutes corrective action) that the waiver rule of this paragraph (f) is being asserted.

(3) *Elections or other actions required to be specified on a timely filed return*—(i) *In general.* If paragraph (f)(1) of this section applies or would apply if there was an underpayment, any election or other action that must be specified on a timely filed return for the taxable period covered by the late filed return described in paragraph (f)(1) of this section is considered timely if specified on a late-filed return filed on or before the last day for making the election under section 338.

(ii) *New target in purchasing corporation's consolidated return.* If new target is includible for its first taxable year in a consolidated return filed by the affiliated group of which the purchasing corporation is a member on or before the last day for making the election under section 338, any election or other action that must be specified in a timely filed return for new target's first taxable year (but which is not specified in the consolidated return) is considered timely if specified in an amended return filed on or before such last day, at the place where the consolidated return was filed.

(4) *Examples.* This paragraph (f) may be illustrated by the following examples:

Example 1. T is an unaffiliated corporation with a tax year ending March 31. At the close of September 20 of Year 1, P makes a qualified stock purchase of T. P does not join in filing a consolidated return. P makes a section 338 election for T on or before June 15 of Year 2, which causes T's taxable year to end as of the close of September 20 of Year 1. An income tax return for T's taxable period ending on September 20 of Year 1 was due on December 15 of Year 1. Additions to tax for failure to file a return and to pay tax shown on a return will not be imposed if T's return is filed and the tax paid on or before June 15 of Year 2. (This waiver applies even if the acquisition date coincides with the last day of T's former taxable year, i.e., March 31 of Year 2.) Interest on any underpayment of tax for old T's short taxable year ending September 20 of Year 1 runs from December 15 of Year 1. A statement indicating that the waiver rule of § 1.338–1(f) is being asserted should be attached to T's return.

Example 2. Assume the same facts as in *Example 1.* Assume further that new T adopts the calendar year by filing, on or before June 15 of Year 2, its first return (for the period beginning on September 21 of Year 1 and ending on December 31 of Year 1) indicating that a calendar year is chosen. See § 1.338–2(d)(8). Any additions to tax or amounts described in this paragraph (f) which arise by reason of

the late filing of a return for the period ending on December 31 of Year 1 are waived, because they are based on circumstances that would not exist but for the section 338 election. Notwithstanding this waiver, however, the return is still considered due March 15 of Year 2, and interest on any underpayment runs from that date.

Example 3. Assume the same facts as in *Example 2,* except that T's former taxable year ends on October 31. Although prior to the election old T had a return due on January 15 of Year 2 for its year ending October 31 of Year 1, that return need not be filed because a timely election under section 338 was made. Instead, old T must file a final return for the period ending on September 20 of Year 1, which is due on December 15 of Year 1.

(g) *Special rules for foreign corporations or DISCs*—(1) *Elections by certain foreign purchasing corporations*—(i) *General rule.* A qualifying foreign purchasing corporation is not required to file a statement of section 338 election for a qualifying foreign target before the earlier of 3 years after the acquisition date and the 180th day after the close of the purchasing corporation's taxable year within which a triggering event occurs.

(ii) *Qualifying foreign purchasing corporation.* A purchasing corporation is a *qualifying foreign purchasing corporation* only if, during the acquisition period of a qualifying foreign target, all the corporations in the purchasing corporation's affiliated group are foreign corporations that are not subject to United States tax.

(iii) *Qualifying foreign target.* A target is a *qualifying foreign target* only if target and its target affiliates are foreign corporations that, during target's acquisition period, are not subject to United States tax (and will not become subject to United States tax during such period by reason of a section 338 election). A target affiliate is taken into account for purposes of the preceding sentence only if, during target's 12-month acquisition period, it is or becomes a member of the affiliated group that includes the purchasing corporation.

(iv) *Triggering event.* A triggering event occurs in the taxable year of the qualifying foreign purchasing corporation in which either that corporation or any corporation in its affiliated group becomes subject to United States tax.

(v) *Subject to United States tax.* For purposes of this paragraph (g)(1), a foreign corporation is considered *subject to United States tax*—

(A) For the taxable year for which that corporation is required under §1.6012–2(g) (other than §1.6012–2(g)(2)(i)(*b*)(*2*)) to file a United States income tax return; or

(B) For the period during which that corporation is a controlled foreign corporation, a passive foreign investment company for which an election under section 1295 is in effect, a foreign investment company, or a foreign corporation the stock ownership of which is described in section 552(a)(2).

(2) *Acquisition period.* For purposes of this paragraph (g), the term *acquisition period* means the period beginning on the first day of the 12-month acquisition period and ending on the acquisition date.

(3) *Statement of section 338 election may be filed by United States shareholders in certain cases.* The United States shareholders (as defined in section 951(b)) of a foreign purchasing corporation that is a controlled foreign corporation (as defined in section 957 (taking into account section 953(c))) may file a statement of section 338 election on behalf of the purchasing corporation if the purchasing corporation is not required under §1.6012–2(g) (other than §1.6012–2(g)(2)(i)(*b*)(*2*)) to file a United States income tax return for its taxable year that includes the acquisition date. Form 8023 must be filed as described in the form and its instructions and also must be attached to the Form 5471 (information return with respect to a foreign corporation) filed with respect to the purchasing corporation by each United States shareholder for the purchasing corporation's taxable year that includes the acquisition date (or, if paragraph (g)(1)(i) of this section applies to the election, for the purchasing corporation's taxable year within which it becomes a controlled foreign corporation). The provisions of §1.964–1(c) (including §1.964–1(c)(7)) do not apply to an election made by the United States shareholders.

(4) *Notice requirement for U.S. persons holding stock in foreign target*—(i) *General rule.* If a target subject to a section 338 election was a controlled foreign

corporation, a passive foreign investment company, or a foreign personal holding company at any time during the portion of its taxable year that ends on its acquisition date, the purchasing corporation must deliver written notice of the election (and a copy of Form 8023, its attachments and instructions) to—

(A) Each U.S. person (other than a member of the affiliated group of which the purchasing corporation is a member (the purchasing group member)) that, on the acquisition date of the foreign target, holds stock in the foreign target; and

(B) Each U.S. person (other than a purchasing group member) that sells stock in the foreign target to a purchasing group member during the foreign target's 12-month acquisition period.

(ii) *Limitation.* The notice requirement of this paragraph (g)(4) applies only where the section 338 election for the foreign target affects income, gain, loss, deduction, or credit of the U.S. person described in paragraph (g)(4)(i) of this section under section 551, 951, 1248, or 1293.

(iii) *Form of notice.* The notice to U.S. persons must be identified prominently as a notice of section 338 election and must—

(A) Contain the name, address, and employer identification number (if any) of, and the country (and, if relevant, the lesser political subdivision) under the laws of which is organized, the purchasing corporation and the relevant target (i.e., target the stock of which the particular U.S. person held or sold under the circumstances described in paragraph (g)(4)(i) of this section);

(B) Identify those corporations as the purchasing corporation and the foreign target, respectively; and

(C) Contain the following declaration (or a substantially similar declaration): ''THIS DOCUMENT SERVES AS NOTICE OF AN ELECTION UNDER SECTION 338 FOR THE ABOVE CITED FOREIGN TARGET THE STOCK OF WHICH YOU EITHER HELD OR SOLD UNDER THE CIRCUMSTANCES DESCRIBED IN TREASURY REGULATIONS §1.338–1(g)(4). FOR POSSIBLE UNITED STATES FEDERAL INCOME TAX CONSEQUENCES UNDER SECTION 551, 951, 1248, OR 1293 OF THE INTERNAL REVENUE CODE OF 1986 THAT MAY APPLY TO YOU, SEE TREASURY REGULATIONS §1.338–5(b). YOU MAY BE REQUIRED TO ATTACH THE INFORMATION ATTACHED TO THIS NOTICE TO CERTAIN RETURNS''.

(iv) *Timing of notice.* The notice required by this paragraph (g)(4) must be delivered to the U.S. person on or before the later of the 120th day after the acquisition date of the particular target or the day on which Form 8023 is filed. If notice is delivered by United States mail, the date of the United States postmark is deemed to be the date of delivery.

(v) *Consequence of failure to comply.* A statement of section 338 election is not valid if timely notice is not given to one or more U.S. persons described in this paragraph (g)(4). If the form of notice fails to comply with all requirements of this paragraph (g)(4), the section 338 election is valid, but the waiver rule of paragraph (f)(1) of this section does not apply.

(vi) *Good faith effort to comply.* The purchasing corporation will be considered to have complied with this paragraph (g)(4), even though it failed to provide notice or provide timely notice to each person described in this paragraph (g)(4), if the Commissioner determines that the purchasing corporation made a good faith effort to identify and provide timely notice to those U.S. persons.

[T.D. 8515, 59 FR 2963, Jan. 20, 1994]

§1.338–2 Miscellaneous issues under section 338.

(a) *Scope.* This section provides guidance on miscellaneous issues under section 338.

(b) *Rules relating to qualified stock purchases*—(1) *Purchasing corporation requirement.* An individual cannot make a qualified stock purchase of target. Section 338(d)(3) requires, as a condition of a qualified stock purchase, that a corporation purchase the stock of target. If an individual forms a corporation (new P) to acquire target stock, new P can make a qualified stock purchase of target if new P is considered for tax purposes to purchase the target stock.

Facts that may indicate that new P does not purchase the target stock include that new P merges downstream into target, liquidates, or otherwise disposes of the target stock following the purported qualified stock purchase.

(2) *Purchase*—(i) *Definition.* The term *purchase* has the same meaning as in section 338(h)(3).

(ii) *Examples.* This paragraph (b)(2) may be illustrated by the following examples:

Example 1. A, who owns all of the stock of P and T, sells the T stock to P for cash. A is treated under section 304(a)(1) as receiving a distribution in redemption of the P stock to which section 301 applies. P is treated as receiving the T stock as a contribution to its capital. Under section 362(a) and § 1.304–2(a), P's basis in the T stock is determined by reference to A's adjusted basis in the stock. Further, stock owned by A would be attributed to P under section 318(a)(3)(C). Thus, P is not considered to have acquired the T stock by purchase. See sections 338(h)(3)(A)(i) and (iii).

Example 2. P exchanges cash for all of the stock of N, a newly formed corporation. N was formed for the sole purpose of acquiring all of the T stock by means of a reverse subsidiary cash merger. Prior to the merger, N conducted no activities other than those required for the merger. Pursuant to the plan, N merges into T, and the T shareholders receive cash for their T stock. No T shareholder is related to P, and no group of T shareholders controls P within the meaning of section 304(c). The existence of N is disregarded, and P is considered to acquire the T stock directly from the T shareholders for cash. Thus, P is considered to have acquired the T stock by purchase.

(3) *Date of purchase from related corporations*—(i) *In general.* Stock acquired by a purchasing corporation from a related corporation (R) is generally not considered acquired by purchase. See section 338(h)(3)(A)(iii). However, if section 338(h)(3)(C) applies and the purchasing corporation is treated as acquiring stock by purchase from R, solely for purposes of determining when the stock is considered acquired—

(A) Target stock acquired from R is considered to have been acquired by the purchasing corporation on the day on which the purchasing corporation is first considered to own that stock under section 318(a) (other than section 318(a)(4)); and

(B) If such stock first may be considered owned by the purchasing corporation on more than one date, such stock is deemed acquired on the earliest date first to the extent thereof, then on the next earliest date, and so on.

(ii) *Examples.* This paragraph (b)(3) may be illustrated by the following examples:

Example 1. (a) On January 1 of Year 1, P purchases 75% in value of the R stock. On that date, R owns 4 of the 100 shares of T stock. On June 1 of Year 1, R acquires an additional 16 shares of T stock. On December 1 of Year 1, P purchases 70 shares of T stock from an unrelated person and 12 of the 20 shares of T stock held by R.

(b) Of the 12 shares of T stock purchased by P from R on December 1 of Year 1, 3 of those shares are deemed to have been acquired by P on January 1 of Year 1, the date on which 3 of the 4 shares of T stock held by R on that date were first considered owned by P under section 318(a)(2)(C) (i.e., 4×.75). The remaining 9 shares of T stock purchased by P from R on December 1 of Year 1, are deemed to have been acquired by P on June 1 of Year 1, the date on which an additional 12 of the 20 shares of T stock owned by R on that date were first considered owned by P under section 318(a)(2)(C) (i.e., (20×.75) −3). Because stock acquisitions by P sufficient for a qualified stock purchase of T occur within a 12-month period (i.e., 3 shares constructively on January 1 of Year 1, 9 shares constructively on June 1 of Year 1, and 70 shares actually on December 1 of Year 1), a qualified stock purchase is made on December 1 of Year 1.

Example 2. (a) On February 1 of Year 1, P acquires 25% in value of the R stock from B (the sole shareholder of P). That R stock is not acquired by purchase. See section 338(h)(3)(A)(iii). On that date, R owns 4 of the 100 shares of T stock. On June 1 of Year 1, P purchases an additional 25% in value of the R stock, and on January 1 of Year 2, P purchases another 25% in value of the R stock. On June 1 of Year 2, R acquires an additional 16 shares of the T stock. On December 1 of Year 2, P purchases 68 shares of the T stock from an unrelated person and 12 of the 20 shares of the T stock held by R.

(b) Of the 12 shares of the T stock purchased by P from R on December 1 of Year 2, 2 of those shares are deemed to have been acquired by P on June 1 of Year 1, the date on which 2 of the 4 shares of the T stock held by R on that date were first considered owned by P under section 318(a)(2)(C) (i.e., 4×.5). For purposes of this attribution, the R stock need not be acquired by P by purchase. See section 338(h)(1). (By contrast, the acquisition of the T stock by P from R does not qualify as a purchase unless P has acquired

at least 50% in value of the R stock by purchase. Section 338(h)(3)(C)(i).) Of the remaining 10 shares of the T stock purchased by P from R on December 1 of Year 2, 1 of those shares is deemed to have been acquired by P on January 1 of Year 2, the date on which an additional 1 share of the 4 shares of the T stock held by R on that date was first considered owned by P under section 318(a)(2)(C) (i.e., (4×.75) −2). The remaining 9 shares of the T stock purchased by P from R on December 1 of Year 2, are deemed to have been acquired by P on June 1 of Year 2, the date on which an additional 12 shares of the T stock held by R on that date were first considered owned by P under section 318(a)(2)(C) (i.e., (20×.75) −3). Because a qualified stock purchase of T by P is made on December 1 of Year 2, only if all 12 shares of the T stock purchased by P from R on that date are considered acquired during a 12-month period ending on that date (so that, in conjunction with the 68 shares of the T stock P purchased on that date from the unrelated person, 80 of T's 100 shares are acquired by P during a 12-month period) and because 2 of those 12 shares are considered to have been acquired by P more than 12 months before December 1 of Year 2 (i.e., on June 1 of Year 1), a qualified stock purchase is not made. (Under § 1.338–4(j)(2), for purposes of applying the consistency rules, P is treated as making a qualified stock purchase of T if, pursuant to an arrangement, P purchases T stock satisfying the requirements of section 1504(a)(2) over a period of more than 12 months.)

Example 3. Assume the same facts as in *Example 2,* except that on February 1 of Year 1, P acquires 25% in value of the R stock by purchase. The result is the same as in *Example 2.*

(4) *Acquisition date for tiered targets*—(i) *Stock sold in deemed asset sale.* If an election under section 338 is made for target, old target is deemed to sell target's assets and new target is deemed to acquire those assets. Under section 338(h)(3)(B), new target's deemed purchase of stock of another corporation is a purchase for purposes of section 338(d)(3) on the acquisition date of target. If new target's deemed purchase causes a qualified stock purchase of the other corporation and if a section 338 election is made for the other corporation, the acquisition date for the other corporation is the same as the acquisition date of target. However, the deemed sale and purchase of the other corporation's assets is considered to take place after the deemed sale and purchase of target's assets.

(ii) *Examples.* This paragraph (b)(4) may be illustrated by the following examples:

Example 1. A owns all of the T stock. T owns 50 of the 100 shares of X stock. The other 50 shares of X stock are owned by corporation Y, which is unrelated to A, T, or P. On January 1 of Year 1, P makes a qualified stock purchase of T from A and makes a section 338 election for T. On December 1 of Year 1, P purchases the 50 shares of X stock held by Y. A qualified stock purchase of X is made on December 1 of Year 1, because the deemed purchase of 50 shares of X stock by new T by reason of the section 338 election for T and the actual purchase of 50 shares of X stock by P are treated as purchases made by one corporation. Section 338(h)(8). For purposes of determining whether those purchases occur within a 12-month acquisition period as required by section 338(d)(3), T is deemed to purchase its X stock on T's acquisition date, i.e., January 1 of Year 1.

Example 2. On January 1 of Year 1, P makes a qualified stock purchase of T and makes a section 338 election for T. On that day, T sells all of the stock of T1 to A. Although T held all of the T1 stock on T's acquisition date, T is not considered to have purchased the T1 stock by reason of the section 338 election for T. In order for T to be treated as purchasing the T1 stock, T must hold the T1 stock when T's deemed sale of assets occurs pursuant to section 338(a). The deemed sale of assets is considered the last transaction of old T at the close of T's acquisition date. Accordingly, the T1 stock actually disposed of by T on the acquisition date is not included in the deemed sale of assets. Thus, T does not make a qualified stock purchase of T1.

(5) *Effect of redemptions*—(i) *General rule.* Except as provided in this paragraph (b)(5), a qualified stock purchase is made on the first day on which the percentage ownership requirements of section 338(d)(3) are satisfied by reference to target stock that is both—

(A) Held on that day by the purchasing corporation; and

(B) Purchased by the purchasing corporation during the 12-month period ending on that day.

(ii) *Redemptions from persons unrelated to the purchasing corporation.* Target stock redemptions from persons unrelated to the purchasing corporation that occur during the 12-month acquisition period are taken into account as reductions in target's outstanding stock for purposes of determining whether target stock purchased by the purchasing corporation in the 12-month

acquisition period satisfies the percentage ownership requirements of section 338(d)(3).

(iii) *Redemptions from the purchasing corporation or related persons during 12-month acquisition period*—(A) *General rule.* For purposes of the percentage ownership requirements of section 338(d)(3), a redemption of target stock during the 12-month acquisition period from the purchasing corporation or from any person related to the purchasing corporation is not taken into account as a reduction in target's outstanding stock.

(B) *Exception for certain redemptions from related corporations.* A redemption of target stock during the 12-month acquisition period from a corporation related to the purchasing corporation is taken into account as a reduction in target's outstanding stock to the extent that the redeemed stock would have been considered purchased by the purchasing corporation (by reason of section 338(h)(3)(C)) during the 12-month acquisition period if the redeemed stock had been acquired by the purchasing corporation from the related corporation on the day of the redemption. See paragraph (b)(3) of this section.

(iv) *Examples.* This paragraph (b)(5) may be illustrated by the following examples:

Example 1. QSP on stock purchase date; redemption from unrelated person during 12-month period. A owns all 100 shares of T stock. On January 1 of Year 1, P purchases 40 shares of the T stock from A. On July 1 of Year 1, T redeems 25 shares from A. On December 1 of Year 1, P purchases 20 shares of the T stock from A. P makes a qualified stock purchase of T on December 1 of Year 1, because the 60 shares of T stock purchased by P within the 12-month period ending on that date satisfy the 80-percent ownership requirements of section 338(d)(3) (i.e., 60/75 shares), determined by taking into account the redemption of 25 shares.

Example 2. QSP on stock redemption date; redemption from unrelated person during 12-month period. The facts are the same as in *Example 1,* except that P purchases 60 shares of T stock on January 1 of Year 1 and none on December 1 of Year 1. P makes a qualified stock purchase of T on July 1 of Year 1, because that is the first day on which the T stock purchased by P within the preceding 12-month period satisfies the 80-percent ownership requirements of section 338(d)(3) (i.e., 60/75 shares), determined by taking into account the redemption of 25 shares.

Example 3. Redemption from unrelated person more than 12 months before stock purchase. A owns all 100 shares of T stock. On January 1 of Year 1, T redeems 25 of its shares. On January 15 of Year 2, P purchases 60 shares of T stock from A. P makes a qualified stock purchase of T on January 15 of Year 2. The 60 shares of T stock purchased by P within the 12-month period ending on that date satisfy the 80-percent ownership requirements of section 338(d)(3) (i.e., 60/75 shares), determined by taking into account the redemption of 25 shares. It is irrelevant that the redemption occurred before the 12-month acquisition period.

Example 4. Redemption from unrelated person more than 12 months after stock purchase. The facts are the same as in *Example 3,* except that the redemption occurs on April 1 of Year 3. P does not make a qualified stock purchase of T on April 1 of Year 3, because 80% of the T stock, as of April 1 of Year 3 had not been purchased in the preceding 12 months. (Under § 1.338–4(j)(2), for purposes of applying the consistency rules, P is treated as making a qualified stock purchase of T if, pursuant to an arrangement, P purchases T stock satisfying the requirements of section 1504(a)(2) over a period of more than 12 months.)

Example 5. Redemption from purchasing corporation not taken into account. On December 15 of Year 1, T redeems 30% of its stock from P. The redeemed stock was held by P for several years and constituted P's total interest in T. On December 1 of Year 2, P purchases the remaining T stock from A. P does not make a qualified stock purchase of T on December 1 of Year 2. For purposes of the 80-percent ownership requirements of section 338(d)(3), the redemption of P's T stock on December 15 of Year 1 is not taken into account as a reduction in T's outstanding stock.

Example 6. Redemption from related person taken into account. On January 1 of Year 1, P purchases 60 of the 100 shares of X stock. On that date, X owns 40 of the 100 shares of T stock. On April 1 of Year 1, T redeems X's T stock and P purchases the remaining 60 shares of T stock from an unrelated person. For purposes of the 80-percent ownership requirements of section 338(d)(3), the redemption of the T stock from X (a person related to P) is taken into account as a reduction in T's outstanding stock. If P had purchased the 40 redeemed shares from X on April 1 of Year 1, all 40 of the shares would have been considered purchased (by reason of section 338(h)(3)(C)(i)) during the 12-month period ending on April of Year 1 (24 of the 40 shares would have been considered purchased by P on January 1 of Year 1 and the remaining 16 shares would have been considered purchased by P on April 1 of Year 1). See paragraph

(b)(3) of this section. Accordingly, P makes a qualified stock purchase of T on April 1 of Year 1, because the 60 shares of T stock purchased by P on that date satisfy the 80-percent ownership requirements of section 338(d)(3) (i.e., 60/60 shares), determined by taking into account the redemption of 40 shares.

(c) *Effect of post-acquisition events on eligibility for section 338 election*—(1) *Post-acquisition elimination of target.* (i) The purchasing corporation may make an election under section 338 for target even though target is liquidated on or after the acquisition date. If target liquidates on the acquisition date, the liquidation is considered to occur on the following day and immediately after new target's deemed purchase of assets. The purchasing corporation may also make an election under section 338 for target even though target is merged into another corporation, or otherwise disposed of by the purchasing corporation provided that, under the facts and circumstances, the purchasing corporation is considered for tax purposes as the purchaser of the target stock.

(ii) This paragraph (c)(1) may be illustrated by the following examples:

Example 1. On January 1 of Year 1, P makes a qualified stock purchase of T. On June 1 of Year 1, P sells the T stock to an unrelated person. Assuming that P is considered for tax purposes as the purchaser of the T stock, P remains eligible, after June 1 of Year 1, to make a section 338 election for T that results in a deemed sale of T's assets on January 1 of Year 1.

Example 2. On January 1 of Year 1, P makes a qualified stock purchase of T. On that date, T owns the stock of T1. On March 1 of Year 1, T sells the T1 stock to an unrelated person. On April 1 of Year 1, P makes a section 338 election for T. Notwithstanding that the T1 stock was sold on March 1 of Year 1, the section 338 election for T on April 1 of Year 1, results in a qualified stock purchase by T of T1 on January 1 of Year 1. See paragraph (b)(4)(i) of this section.

(2) *Post-acquisition elimination of the purchasing corporation.* An election under section 338 may be made for target after the acquisition of assets of the purchasing corporation by another corporation in a transaction described in section 381(a), provided that the purchasing corporation is considered for tax purposes as the purchaser of the target stock. The acquiring corporation in the section 381(a) transaction may make an election under section 338 for target.

(3) *Consequences of post-acquisition elimination of target*—(i) *Scope.* The rules of this paragraph (c)(3) apply to the transfer of target assets to the purchasing corporation (or another member of the same affiliated group as the purchasing corporation) (the transferee) following a qualified stock purchase of target stock, if the purchasing corporation does not make a section 338 election for target. Notwithstanding the rules of this paragraph (c)(3), section 354(a) (and so much of section 356 as relates to section 354) cannot apply to any person other than the purchasing corporation or another member of the same affiliated group as the purchasing corporation unless the transfer of target assets is pursuant to a reorganization as determined without regard to this paragraph (c)(3).

(ii) *Continuity of interest.* By virtue of section 338, in determining whether the continuity of interest requirement of § 1.368–1 (b) and (e) is satisfied on the transfer of assets from target to the transferee, the purchasing corporation's target stock acquired in the qualified stock purchase shall be treated as though it was not acquired in connection with the transfer of target assets.

(iii) *Control requirement.* By virtue of section 338, the acquisition of target stock in the qualified stock purchase will not prevent the purchasing corporation from qualifying as a shareholder of the target transferor for the purpose of determining whether, immediately after the transfer of target assets, a shareholder of the transferor is in control of the corporation to which the assets are transferred within the meaning of section 368(a)(1)(D).

(iv) *Example.* This paragraph (c)(3) is illustrated by the following example:

Example (A) *Facts.* P, T, and X are domestic corporations. T and X each operate a trade or business. A and K, individuals unrelated to P, own 85 and 15 percent, respectively, of the stock of T. P owns all of the stock of X. The total adjusted basis of T's property exceeds the sum of T's liabilities plus the amount of liabilities to which T's property is subject. P purchases all of A's T stock for cash in a qualified stock purchase. P does not make an election under section 338(g)

with respect to its acquisition of T stock. Shortly after the acquisition date, and as part of the same plan, T merges under applicable state law into X in a transaction that, but for the question of continuity of interest, satisfies all the requirements of section 368(a)(1)(A). In the merger, all of T's assets are transferred to X. P and K receive X stock in exchange for their T stock. P intends to retain the stock of X indefinitely.

(B) *Status of transfer as a reorganization.* By virtue of section 338, for the purpose of determining whether the continuity of interest requirement of §1.368–1(b) is satisfied, P's T stock acquired in the qualified stock purchase shall be treated as though it was not acquired in connection with the transfer of T assets to X. Thus, the continuity of interest requirement is satisfied and the merger of T into X is a reorganization within the meaning of section 368(a)(1)(A). Moreover, by virtue of section 338, the requirement of section 368(a)(1)(D) that a target shareholder control the transferee immediately after the transfer is satisfied because P controls X immediately after the transfer. In addition, all of T's assets are transferred to X in the merger and P and K receive the X stock exchanged therefor in pursuance of the plan of reorganization. Thus, the merger of T into X is also a reorganization within the meaning of section 368(a)(1)(D).

(C) *Treatment of T and X.* Under section 361(a), T recognizes no gain or loss in the merger. Under section 362(b), X's basis in the assets received in the merger is the same as the basis of the assets in T's hands. X succeeds to and takes into account the items of T as provided in section 381.

(D) *Treatment of P.* By virtue of section 338, the transfer of T assets to X is a reorganization. Pursuant to that reorganization, P exchanges its T stock solely for stock of X, a party to the reorganization. Because P is the purchasing corporation, section 354 applies to P's exchange of T stock for X stock in the merger of T into X. Thus, P recognizes no gain or loss on the exchange. Under section 358, P's basis in the X stock received in the exchange is the same as the basis of P's T stock exchanged therefor.

(E) *Treatment of K.* Because K is not the purchasing corporation (or an affiliate thereof), section 354 cannot apply to K's exchange of T stock for X stock in the merger of T into X unless the transfer of T's assets is pursuant to a reorganization as determined without regard to §1.338–2(c)(3). Under general income tax principles applicable to reorganizations, the continuity of interest requirement is not satisfied because P's stock purchase and the merger of T into X are pursuant to an integrated transaction in which A, the owner of 85 percent of the stock of T, received solely cash in exchange for A's T stock. See, e.g., *Yoc Heating* v. *Commissioner,* 61 T.C. 168 (1973); *Kass* v. *Commissioner,* 60 T.C. 218 (1973), *aff'd,* 491 F.2d 749 (3d Cir. 1974). Thus, the requisite continuity of interest under §1.368–1(b) is lacking and section 354 does not apply to K's exchange of T stock for X stock. K recognizes gain or loss, if any, pursuant to section 1001(c) with respect to its T stock.

(v) *Effective date.* The provisions of this paragraph (c)(3) are effective for transfers of target assets on or after October 26, 1995.

(d) *Miscellaneous matters affecting new target*—(1) *General rule for subtitle A.* Except as provided in this paragraph (d), new target is treated as a new corporation that is unrelated to old target for purposes of subtitle A of the Internal Revenue Code. Thus, in the section 338(a)(1) deemed sale, new target is treated as purchasing assets from an unrelated person, and—

(i) New target is not considered related to old target for purposes of section 168 and may make new elections under section 168 without taking into account the elections made by old target; and—

(ii) New target may adopt, without obtaining prior approval from the Commissioner, any taxable year that meets the requirements of section 441 and any method of accounting that meets the requirements of section 446.

(2) *Exceptions for subtitle A.* New target and old target are treated as the same corporation for purposes of—

(i) The rules applicable to employee benefit plans (including those plans described in sections 79, 104, 105, 120, 125, 127, and 129), qualified pension, profit-sharing, stock bonus and annuity plans (sections 401(a) and 403(a)), simplified employee pensions (section 408(k)), and tax qualified stock option plans (sections 422 and 423);

(ii) Sections 1311–1314 (relating to the mitigation of the effect of limitations) if a section 338(h)(10) election is not made for target; and

(iii) Any other provision identified by the Commissioner.

(3) *Taxable year of new target.* Notwithstanding §1.441–1T(b)(2), a new target may adopt a taxable year on or before the last day for making the election under section 338 by filing its first return for the desired taxable year on or before that date.

(4) *General rule for other provisions of the Internal Revenue Code.* Except as

provided in the regulations under section 338 or by the Commissioner, new target is treated as a continuation of old target for purposes other than subtitle A. For example—

(i) New target is liable for old target's federal income tax liabilities, including tax liabilities resulting from the deemed asset sale and those tax liabilities of the other members of any consolidated group that included old target that are attributable to taxable years in which those corporations and old target joined in the same consolidated return (see §1.1502–6(a));

(ii) Wages earned by the employees of old target are considered wages earned by such employees from new target for purposes of sections 3101 and 3111 (Federal Insurance Contributions Act) and section 3301 (Federal Unemployment Tax Act); and

(iii) Old target and new target must use the same employer identification number.

[T.D. 8515, 59 FR 2966, Jan. 20, 1994, as amended by T.D. 8626, 60 FR 54944, Oct. 27, 1995; T.D. 8760, 63 FR 4178, Jan. 28, 1998]

§1.338–3 Deemed sale and aggregate deemed sale price.

(a) *Scope.* This section provides guidance regarding the recognition of gain or loss on the deemed sale of target affiliate stock. This section also provides guidance regarding the determination of the price (the aggregate deemed sale price) at which old target is treated as selling its assets in the section 338(a)(1) deemed sale for purposes of determining the gain or loss recognized by target in the deemed sale. Notwithstanding section 338(h)(6)(B)(ii), stock held by a target affiliate in a foreign corporation or in a corporation that is a DISC or that is described in section 1248(e) is not excluded from the operation of section 338.

(b) *Definitions.* For purposes of the regulations under section 338:

(1) *ADSP.* The *ADSP* is the aggregate deemed sale price, i.e., the price at which target is deemed to have sold all of its assets in the deemed sale under section 338(a)(1). See paragraph (d) of this section for the determination of the ADSP.

(2) *Allocable ADSP amount.* The *allocable ADSP amount* is the portion of the ADSP that is allocable to a particular target asset. Deemed sale gain on a target asset is computed by reference to the allocable ADSP amount for that asset. Except as provided in section 7701(g) (relating to fair market value in the case of nonrecourse indebtedness), the ADSP is allocated among target assets for this purpose under the principles of §1.338(b)–2T (without taking into account §1.338(b)–2T(c)(2)). Appropriate adjustments to reflect accurately the fair market value of assets must be made if stock of a target affiliate is purchased in the section 338(a)(1) deemed sale, a section 338 election is made for the target affiliate, and target recognizes no gain or loss on the deemed sale of the target affiliate stock under paragraph (c) of this section. See *Example 4* of paragraph (d)(8) of this section.

(3) *Deemed sale gain. Deemed sale gain* is gain (or loss) that is recognized in the section 338(a)(1) deemed sale. For purposes of subtitle A of the Internal Revenue Code, deemed sale gain is taken into account by treating the old target as if, on the acquisition date, it sold all of its assets to an unrelated person in the deemed sale. See §1.338–2(d)(1). For example, section 267 does not apply to loss recognized on the deemed sale.

(4) *Classes of assets.* The classes of assets are defined in §1.338(b)–2T(b).

(c) *Deemed sale of target affiliate stock*—(1) *In general.* This paragraph (c) prescribes rules relating to the treatment of gain or loss realized on the deemed sale of stock of a target affiliate where a section 338 election (but not a section 338(h)(10) election) is made for the target affiliate. For purposes of this paragraph (c), the definition of domestic corporation in §1.338–1(c)(5) is applied without the exclusion therein for DISCs, corporations described in section 1248(e), and corporations to which an election under section 936 applies.

(2) *General rule.* Except as otherwise provided in this paragraph (c), if a section 338 election is made for target, no gain or loss is recognized by target on the deemed sale of stock of a target affiliate having the same acquisition date and for which a section 338 election is made if—

(i) Target directly owns stock in the target affiliate satisfying the requirements of section 1504(a)(2);

(ii) Target and the target affiliate are members of a consolidated group filing a final consolidated return described in § 1.338–1(e)(1); or

(iii) Target and the target affiliate file a combined return under § 1.338–1(e)(4).

(3) *Deemed sale of foreign target affiliate by a domestic target.* Gain or loss is recognized by a domestic target on the deemed sale of stock of a foreign target affiliate. For the proper treatment of such gain or loss, see, e.g., sections 1246, 1248, 1291 *et seq.*, and 338(h)(16) and § 1.338–5.

(4) *Deemed sale producing effectively connected income.* Gain or loss is recognized by a foreign target on the deemed sale of stock of a foreign target affiliate to the extent that such gain or loss is effectively connected (or treated as effectively connected) with the conduct of a trade or business in the United States.

(5) *Deemed sale of insurance company target affiliate electing under section 953(d).* Gain (but not loss) is recognized by a domestic target on the deemed sale of stock of a target affiliate that has in effect an election under section 953(d) in an amount equal to the lesser of the gain realized or the earnings and profits described in section 953(d)(4)(B).

(6) *Deemed sale of DISC target affiliate.* Gain (but not loss) is recognized by a foreign or domestic target on the deemed sale of stock of a target affiliate that is a DISC or a former DISC (as defined in section 992(a)) in an amount equal to the lesser of the gain realized or the amount of accumulated DISC income determined with respect to such stock under section 995(c). Such gain is included in gross income as a dividend as provided in sections 995(c)(2) and 996(g).

(7) *Anti-stuffing rule.* If an asset the adjusted basis of which exceeds its fair market value is contributed or transferred to a target affiliate as transferred basis property (within the meaning of section 7701(a)(43)) and a purpose of such transaction is to reduce the gain (or increase the loss) recognized on the deemed sale of such target affiliate's stock, the gain or loss recognized by target on the deemed sale of stock of the target affiliate is determined as if such asset had not been contributed or transferred.

(8) *Examples.* This paragraph (c) may be illustrated by the following examples:

Example 1. (a) P makes a qualified stock purchase of T and makes a section 338 election for T. T's sole asset, all of the T1 stock, has a basis of $50 and a fair market value of $150. T's deemed purchase of the T1 stock results in a qualified stock purchase of T1 and a section 338 election is made for T1. T1's assets have a basis of $50 and a fair market value of $150.

(b) T realizes $100 of gain on the deemed sale of the T1 stock, but the gain is not recognized because T directly owns stock in T1 satisfying the requirements of section 1504(a)(2) and a section 338 election is made for T1.

(c) T1 recognizes gain of $100 on the deemed sale of its assets.

Example 2. The facts are the same as in *Example 1,* except that P does not make a section 338 election for T1. Because a section 338 election is not made for T1, the $100 gain realized by T on the deemed sale of the T1 stock is recognized.

Example 3. (a) P makes a qualified stock purchase of T and makes a section 338 election for T. T owns all of the stock of T1 and T2. T's deemed purchase of the T1 and T2 stock results in a qualified stock purchase of T1 and T2 and a section 338 election is made for T1 and T2. T1 and T2 each own 50% of the vote and value of T3 stock. The deemed purchases by T1 and T2 of the T3 stock result in a qualified stock purchase of T3 and a section 338 election is made for T3. T is the common parent of a consolidated group and all of the deemed sales are reported on the T group's final consolidated return. See § 1.338–1(e)(1).

(b) Because T, T1, T2 and T3 are members of a consolidated group filing a final consolidated return, no gain or loss is recognized by T, T1 or T2 on their respective deemed sales of target affiliate stock.

Example 4. (a) T's sole asset, all of the FT1 stock, has a basis of $25 and a fair market value of $150. FT1's sole asset, all of the FT2 stock, has a basis of $75 and a fair market value of $150. FT1 and FT2 each have $50 of accumulated earnings and profits for purposes of section 1248(c) and (d). FT2's assets have a basis of $125 and a fair market value of $150, and their sale would not generate subpart F income under section 951. The sale of the FT2 stock or assets would not generate income effectively connected with the conduct of a trade or business within the United States. FT1 does not have an election in effect under section 953(d) and neither FT1

nor FT2 is a passive foreign investment company.

(b) P makes a qualified stock purchase of T and makes a section 338 election for T. T's deemed purchase of the FT1 stock results in a qualified stock purchase of FT1 and a section 338 election is made for FT1. Similarly, FT1's deemed purchase of the FT2 stock results in a qualified stock purchase of FT2 and a section 338 election is made for FT2.

(c) T recognizes $125 of gain on the deemed sale of the FT1 stock under paragraph (c)(3) of this section. FT1's $75 of gain on the deemed sale of the FT2 stock is not recognized under paragraph (c)(2) of this section. FT2 recognizes $25 of gain on the deemed sale of its assets. The $125 gain T recognizes on the deemed sale of the FT1 stock is included in T's income as a dividend under section 1248, because FT1 and FT2 have sufficient earnings and profits for full recharacterization ($50 of accumulated earnings and profits in FT1, $50 of accumulated earnings and profits in FT2, and $25 of deemed sale earnings and profits in FT2). § 1.338–5(b). For purposes of sections 901 through 908, the source and foreign tax credit limitation basket of $25 of the recharacterized gain on the deemed sale of the FT1 stock is determined under section 338(h)(16).

(d) *Determination of ADSP*—(1) *General rule.* The ADSP is the sum of—

(i) The grossed-up basis of the purchasing corporation's recently purchased target stock (as defined in section 338(b)(6)(A));

(ii) The liabilities of new target (including any tax liabilities resulting from the deemed sale); and

(iii) Other relevant items.

(2) *Grossed-up basis of the purchasing corporation's recently purchased target stock.* The grossed-up basis of the purchasing corporation's recently purchased target stock is an amount equal to the purchasing corporation's basis in recently purchased target stock, divided by the percentage of target stock (by value) attributable to that recently purchased target stock. If target has a single class of outstanding stock, the grossed-up basis of the purchasing corporation's recently purchased target stock reflects the total price the purchasing corporation would have paid for all outstanding target stock had it purchased all such stock for a price per share equal to the average price per share that it paid for the recently purchased target stock.

(3) *Liabilities.* Liabilities taken into account are the liabilities of new target described in § 1.338(b)–1(f). The amount of the liabilities of new target taken into account to calculate ADSP is determined as if old target had sold its assets to an unrelated person for consideration that included the liabilities. Thus, the ADSP takes into account both tax credit recapture liability arising by reason of the deemed sale and the tax liability on deemed sale gain. The ADSP reflects the fact that deemed sale gain (loss) both increases (decreases) the ADSP by creating (reducing) a tax liability and is computed by reference to the ADSP.

(4) *Other relevant items.* Other relevant items include reductions for acquisition costs of the purchasing corporation incurred in connection with the qualified stock purchase that are capitalized in the basis of recently purchased target stock (e.g., brokerage commissions and any similar costs paid by the purchasing corporation to acquire target stock).

(5) *Calculation of deemed sale gain and loss.* Deemed sale gain on each asset is computed by reference to the ADSP. In certain cases, the determination of the tax liability resulting from the deemed sale and therefore the determination of the ADSP may require trial and error computations.

(6) *Other rules apply in determining ADSP.* The ADSP may not be applied in such a way as to contravene other applicable rules. For example, a capital loss cannot be applied to reduce ordinary income in calculating the tax liability on the deemed sale for purposes of determining the ADSP.

(7) *Cross-reference.* See § 1.338(b)–3T(h) for adjustments to ADSP because of events occurring after the acquisition date and § 1.338(h)(10)–1(f) for the determination of modified ADSP.

(8) *Examples.* (i) For purposes of the examples in this paragraph (d)(8), unless otherwise stated, T is a calendar year taxpayer that files separate returns and that has no loss, tax credit, or other carryovers to Year 1. Depreciation for Year 1 is not taken into account. T has no liabilities other than a federal income tax liability resulting from the deemed sale of assets, and T has no other relevant items. Assume that T's tax rate for any ordinary income or net capital gain resulting from

the deemed sale of assets is 34 percent and that any capital loss is offset by capital gain. On July 1 of Year 1, P purchases all of the stock of T and makes a section 338 election for T.

(ii) This paragraph (d) may be illustrated by the following examples:

Example 1. One class. (a) On July 1 of Year 1, T's only asset is an item of section 1245 property with an adjusted basis to T of $50,400, a recomputed basis of $80,000, and a fair market value of $100,000. P purchases all of the T stock for $75,000.

(b) The ADSP may be determined as follows. (In the formula below, G is the grossed-up basis in P's recently purchased T stock, L is T's liabilities other than T's tax liabilities for deemed sale gain determined by reference to the ADSP, T_R is the applicable tax rate, and B is the adjusted basis of the asset deemed sold.)

$ADSP = G + L + T_R \times (ADSP - B)$

$ADSP = (\$75{,}000/1) + \$0 + .34 \times (ADSP - \$50{,}400)$

$ADSP = \$75{,}000 + .34ADSP - \$17{,}136$

$.66ADSP = \$57{,}864$

$ADSP = \$87{,}672.72$

(c) Because the ADSP for T ($87,672.72) does not exceed the fair market value of T's asset ($100,000), a Class III asset, T's entire ADSP is allocated to that asset. Thus, T has deemed sale gain of $37,272.72 (consisting of $29,600 of ordinary income and $7,672.72 of capital gain).

(d) The facts are the same as in paragraph (a) of this *Example 1,* except that on July 1 of Year 1, P purchases only 80 of the 100 shares of T stock for $60,000. The grossed-up basis in P's recently purchased T stock (G) is $75,000 ($60,000/.8). Consequently, the ADSP and deemed sale gain are the same as in paragraphs (b) and (c) of this *Example 1.*

(e) The facts are the same as in paragraph (a) of this *Example 1,* except that T also has goodwill (a Class V asset) with an appraised value of $10,000. The results are the same as in paragraphs (b) and (c) of this *Example 1.* Because the ADSP does not exceed the fair market value of the Class III asset, no amount is allocated to the Class V assets (assets in the nature of goodwill and going concern value).

Example 2. More than one class. (a) P purchases all of the T stock for $140,000. On July 1 of Year 1, T has liabilities (not including the tax liability for deemed sale gain of its assets) of $50,000, cash (a Class I asset) of $10,000, readily marketable securities (a Class II asset) with a basis of $4,000 and a fair market value of $10,000, goodwill (a Class V asset) with a basis of $3,000, and the following Class III assets:

Asset	Basis	FMV	Ratio
1. Land	$5,000	$35,000	.14
2. Inventory	10,000	50,000	.20
3. Equipment A (recomputed basis $80,000)	5,000	90,000	.36
4. Equipment B (recomputed basis $20,000)	10,000	75,000	.30
Totals	$30,000	$250,000	1.00

(b) The ADSP exceeds $20,000. Thus, $10,000 of the ADSP is allocated to the cash and $10,000 to the marketable securities. Except as provided in section 7701(g), the amount allocated to an asset (other than a Class V asset) cannot exceed its fair market value. See § 1.338(b)–2T(c)(1) (relating to fair market value limitation).

(c) The portion of the ADSP allocable to the Class III assets is preliminarily determined as follows. (In the formula, the amount allocated to the Class I assets is referred to as *I* and the amount allocated to the Class II assets as *II*.)

$ADSP_{III} = (G - (I + II)) + L + T_R \times [(II - B_{II}) + (ADSP_{III} - B_{III})]$

$ADSP_{III} = (\$140{,}000 - (\$10{,}000 + \$10{,}000)) + \$50{,}000 + .34 \times [(\$10{,}000 - \$4{,}000) + (ADSP_{III} - (\$5{,}000 + \$10{,}000 + \$5{,}000 + \$10{,}000))]$

$ADSP_{III} = \$161{,}840 + .34ADSP_{III}$

$.66ADSP_{III} = \$161{,}840$

$ADSP_{III} = \$245{,}212.12$

(d) Because, under the preliminary calculations of the ADSP, the amount to be allocated to the Class I, II, III, and IV assets does not exceed their aggregate fair market value, no ADSP amount is allocated to goodwill. Accordingly, the deemed sale of the goodwill results in a capital loss of $3,000. The portion of the ADSP allocable to the Class III assets is finally determined by taking into account this loss as follows:

$ADSP_{III} = (G - (I + II)) + L + T_R \times [(II - B_{II}) + (ADSP_{III} - B_{III}) + (ADSP_V - B_V)]$

$ADSP_{III} = (\$140{,}000 - (\$10{,}000 + \$10{,}000)) + \$50{,}000 + .34 \times [(\$10{,}000 - \$4{,}000) + (ADSP_{III} - \$30{,}000) + (\$0 - \$3{,}000)]$

$ADSP_{III} = \$160{,}820 + .34ADSP_{III}$

$.66ADSP_{III} = \$160{,}820$

$ADSP_{III} = \$243{,}666.67$

(e) The allocation of $ADSP_{III}$ among the Class III assets is in proportion to their fair market values, as follows:

Asset	ADSP	Gain
1. Land	$34,113.33	$29,113.33 (capital gain)
2. Inventory	48,733.34	38,733.34 (ordinary income)
3. Equipment A	87,720.00	82,720.00 (75,000 ordinary income 7,720 capital gain)

Asset	ADSP	Gain
4. Equipment B	73,100.00	63,100.00 (10,000 ordinary income 53,100 capital gain)
Totals	243,666.67	213,666.67

Example 3. More than one class. (a) The facts are the same as in *Example 2,* except that P purchases the T stock for $150,000, rather than $140,000.

(b) As in *Example 2,* the ADSP exceeds $20,000. Thus, $10,000 of the ADSP is allocated to the cash and $10,000 to the marketable securities.

(c) The portion of the ADSP allocable to the Class III assets as preliminarily determined under the formula set forth in paragraph (c) of *Example 2* is $260,363.64. The amount allocated to the Class III assets cannot exceed their aggregate fair market value ($250,000). Thus, preliminarily, the ADSP amount allocated to Class III assets is $250,000.

(d)(1) Based on the preliminary allocation, the ADSP is determined as follows: (In the formula, the amount allocated to the Class I assets is referred to as *I,* the amount allocated to the Class II assets as *II,* and the amount allocated to the Class III assets as *III.*)

$$ADSP = G + L + T_R \times [(II - B_{II}) + (III - B_{III}) + (ADSP - (I + II + III + B_V))]$$

$$ADSP = \$150{,}000 + \$50{,}000 + .34 \times [(\$10{,}000 - \$4{,}000) + (\$250{,}000 - \$30{,}000) + (ADSP - (\$10{,}000 + \$10{,}000 + \$250{,}000 + \$3{,}000))]$$

$$ADSP = \$200{,}000 + .34ADSP - \$15{,}980$$

$$.66ADSP = \$184{,}020$$

$$ADSP = \$278{,}818.18$$

(2) Because the ADSP as determined exceeds the aggregate fair market value of the Class I, II, III, and IV assets, the $250,000 amount preliminarily allocated to the Class III assets is appropriate. Thus, the amount of the ADSP allocated to Class III assets equals their aggregate fair market value ($250,000), and the allocated ADSP amount for each Class III asset is its fair market value. Further, because there are no Class IV assets, the allocable ADSP amount for the Class V asset (goodwill) is $8,818.18 (the excess of the ADSP over the aggregate ADSP amounts for the Class I, II, and III assets).

Example 4. Amount allocated to T1 stock. (a) The facts are the same as in *Example 2,* except that T owns all of the T1 stock (instead of the inventory), and T1's only asset is the inventory. The T1 stock and inventory each have a fair market value of $50,000, and the inventory has a basis of $10,000. A section 338 election is made for T1 (as well as T), and T1 has no liabilities other than a tax liability resulting from the deemed sale gain. Under paragraph (c) of this section, T recognizes no gain or loss on its deemed sale of T1 stock.

(b) The ADSP exceeds $20,000. Thus, $10,000 of the ADSP is allocated to the cash and $10,000 to the marketable securities.

(c) T1 stock is purchased in the deemed sale of T assets, T does not recognize any gain on the deemed sale of the T1 stock under paragraph (c) of this section, and a section 338 election is made for T1. Thus, under paragraph (b)(2) of this section, in determining the allocation of ADSP among T's Class III assets, including the T1 stock, appropriate adjustments must be made to reflect accurately the fair market value of the T and T1 assets. In preliminarily calculating $ADSP_{III}$ in this case, the T1 stock can be disregarded and, because T owns all of the T1 stock, the T1 asset can be treated as a T asset. Under this assumption, $ADSP_{III}$ is $243,666.67. See paragraph (d) of *Example 2.*

(d) Because the portion of the preliminary ADSP allocable to Class III assets ($243,666.67) does not exceed their fair market value ($250,000), no amount is allocated to Class V assets for T. Further, this amount ($243,666.67) is allocated among T's Class III assets in proportion to their fair market values. See paragraph (e) of *Example 2.* Tentatively, $48,733.34 of this amount is allocated to the T1 stock.

(e) The amount tentatively allocated to the T1 stock, however, reflects the tax incurred on the deemed sale of the T1 asset equal to $13,169.34 (.34 × ($48,733.34 − $10,000)). Thus, the ADSP allocable to the Class III assets of T, and the allocable ADSP amount for the T1 stock, as preliminarily calculated, each must be reduced by $13,169.34. Consequently, these amounts, respectively, are $230,497.33 and $35,564.00. In determining the ADSP for T1, the grossed-up basis of T's recently purchased T1 stock is $35,564.00.

(f) The facts are the same as in paragraph (a) of this *Example 4,* except that the T1 inventory has a $12,500 basis and a $62,500 value, the T1 stock has a $62,500 value, and T owns 80% of the T1 stock. In preliminarily calculating $ADSP_{III}$, the T1 stock can be disregarded but, because T owns only 80% of the T1 stock, only 80% of T1 asset basis and value should be taken into account in calculating T's ADSP. By taking into account 80% of these amounts, the remaining calculations and results are the same as in paragraphs (b), (c), (d), and (e) of this *Example 4,* except that the grossed-up basis in T's recently purchased T1 stock is $44,455.00 ($35,564.00/0.8).

[T.D. 8515, 59 FR 2969, Jan. 20, 1994; as amended by T.D. 8711, 62 FR 2268, Jan. 16, 1997]

§ 1.338–4 Asset and stock consistency.

(a) *Introduction*—(1) *Overview.* This section implements the consistency rules of sections 338(e) and (f). Under this section, no election under section

338 is deemed made or required with respect to target or any target affiliate. Instead, the person acquiring an asset may have a carryover basis in the asset.

(2) *General application.* The consistency rules generally apply if the purchasing corporation acquires an asset directly from target during the target consistency period and target is a subsidiary in a consolidated group. In such a case, gain from the sale of the asset is reflected under the investment adjustment provisions of the consolidated return regulations in the basis of target stock and may reduce gain from the sale of the stock. See § 1.1502–32 (investment adjustment provisions). Under the consistency rules, the purchasing corporation generally takes a carryover basis in the asset, unless a section 338 election is made for target. Similar rules apply if the purchasing corporation acquires an asset directly from a lower-tier target affiliate if gain from the sale is reflected under the investment adjustment provisions in the basis of target stock.

(3) *Extensions of the general rules.* If an arrangement exists, paragraph (f) of this section generally extends the carryover basis rule to certain cases in which the purchasing corporation acquires assets indirectly from target (or a lower-tier target affiliate). To prevent avoidance of the consistency rules, paragraph (j) of this section also may extend the consistency period or the 12-month acquisition period and may disregard the presence of conduits.

(4) *Application where certain dividends are paid.* Paragraph (g) of this section extends the carryover basis rule to certain cases in which dividends are paid to a corporation that is not a member of the same consolidated group as the distributing corporation. Generally, this rule applies where a 100 percent dividends received deduction is used in conjunction with asset dispositions to achieve an effect similar to that available under the investment adjustment provisions of the consolidated return regulations.

(5) *Application to foreign target affiliates.* Paragraph (h) of this section extends the carryover basis rule to certain cases involving target affiliates that are controlled foreign corporations.

(6) *Stock consistency.* This section limits the application of the stock consistency rules to cases in which the rules are necessary to prevent avoidance of the asset consistency rules. Following the general treatment of a section 338(h)(10) election, a sale of a corporation's stock is treated as a sale of the corporation's assets if a section 338(h)(10) election is made. Because gain from this asset sale may be reflected in the basis of the stock of a higher-tier target, the carryover basis rule may apply to the assets.

(b) *Consistency for direct acquisitions*—(1) *General rule.* The basis rules of paragraph (d) of this section apply to an asset if—

(i) The asset is disposed of during the target consistency period;

(ii) The basis of target stock, as of the target acquisition date, reflects gain from the disposition of the asset (see paragraph (c) of this section); and

(iii) The asset is owned, immediately after its acquisition and on the target acquisition date, by a corporation that acquires stock of target in the qualified stock purchase (or by an affiliate of an acquiring corporation).

(2) *Section 338(h)(10) elections.* For purposes of this section, if a section 338(h)(10) election is made for a corporation acquired in a qualified stock purchase—

(i) The acquisition is treated as an acquisition of the corporation's assets (see § 1.338(h)(10)–1); and

(ii) The corporation is not treated as target.

(c) *Gain from disposition reflected in basis of target stock.* For purposes of this section:

(1) *General rule.* Gain from the disposition of an asset is reflected in the basis of a corporation's stock if the gain is taken into account under § 1.1502–32, directly or indirectly, in determining the basis of the stock, after applying section 1503(e) and other provisions of the Internal Revenue Code.

(2) *Gain not reflected if section 338 election made for target.* Gain from the disposition of an asset that is otherwise reflected in the basis of target stock as of the target acquisition date is not

considered reflected in the basis of target stock if a section 338 election is made for target.

(3) *Gain reflected by reason of distributions.* Gain from the disposition of an asset is not considered reflected in the basis of target stock merely by reason of the receipt of a distribution from a target affiliate that is not a member of the same consolidated group as the distributee. See paragraph (g) of this section for the treatment of dividends eligible for a 100 percent dividends received deduction.

(4) *Controlled foreign corporations.* For a limitation applicable to gain of a target affiliate that is a controlled foreign corporation, see paragraph (h)(2) of this section.

(5) *Gain recognized outside the consolidated group.* Gain from the disposition of an asset by a person other than target or a target affiliate is not reflected in the basis of a corporation's stock unless the person is a conduit, as defined in paragraph (j)(4) of this section.

(d) *Basis of acquired assets*—(1) *Carryover basis rule.* If this paragraph (d) applies to an asset, the asset's basis immediately after its acquisition is, for all purposes of the Internal Revenue Code, its adjusted basis immediately before its disposition.

(2) *Exceptions to carryover basis rule for certain assets.* The carryover basis rule of paragraph (d)(1) of this section does not apply to the following assets—

(i) Any asset disposed of in the ordinary course of a trade or business (see section 338(e)(2)(A));

(ii) Any asset the basis of which is determined wholly by reference to the adjusted basis of the asset in the hands of the person that disposed of the asset (see section 338(e)(2)(B));

(iii) Any debt or equity instrument issued by target or a target affiliate (*see* paragraph (h)(3) of this section for an exception relating to the stock of a target affiliate that is a controlled foreign corporation);

(iv) Any asset the basis of which immediately after its acquisition would otherwise be less than its adjusted basis immediately before its disposition; and

(v) Any asset identified by the Internal Revenue Service in a revenue ruling or revenue procedure.

(3) *Exception to carryover basis rule for de minimis assets.* The carryover basis rules of this section do not apply to an asset if the asset is not disposed of as part of the same arrangement as the acquisition of target and the aggregate amount realized for all assets otherwise subject to the carryover basis rules of this section does not exceed $250,000.

(4) *Mitigation rule*—(i) *General rule.* If the carryover basis rules of this section apply to an asset and the asset is transferred to a domestic corporation in a transaction to which section 351 applies or as a contribution to capital and no gain is recognized, the transferor's basis in the stock of the transferee (but not the transferee's basis in the asset) is determined without taking into account the carryover basis rules of this section.

(ii) *Time for transfer.* This paragraph (d)(4) applies only if the asset is transferred before the due date (including extensions) for the transferor's income tax return for the year that includes the last date for which a section 338 election may be made for target.

(e) *Examples*—(1) *In general.* For purposes of the examples in this section, unless otherwise stated, the basis of each asset is the same for determining earnings and profits and taxable income, the exceptions to paragraph (d)(1) of this section do not apply, the taxable year of all persons is the calendar year, and the following facts apply: S is the common parent of a consolidated group that includes T, T1, T2, and T3; S owns all of the stock of T and T3; and T owns all of the stock of T1, which owns all of the stock of T2. B is unrelated to the S group and owns all of the stock of P, which owns all of the stock of P1. Y and Y1 are partnerships that are unrelated to the S group but may be related to the P group. Z is a corporation that is not related to any of the other parties.

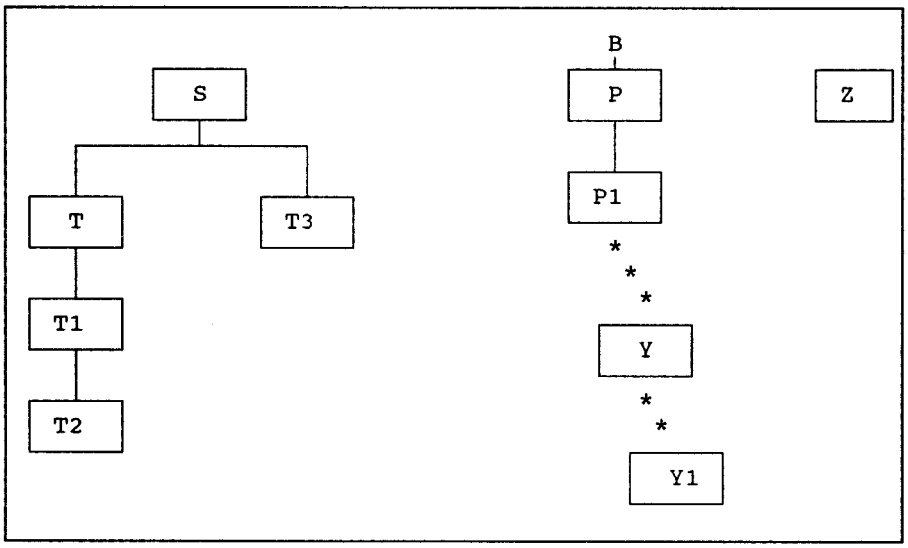

(2) *Direct acquisitions.* Paragraphs (b), (c), and (d) of this section may be illustrated by the following examples:

Example 1. Asset acquired from target by purchasing corporation. (a) On February 1 of Year 1, T sells an asset to P1 and recognizes gain. T's gain from the disposition of the asset is taken into account under §1.1502–32 in determining S's basis in the T stock. On January 1 of Year 2, P1 makes a qualified stock purchase of T from S. No section 338 election is made for T.

(b) T disposed of the asset during its consistency period, gain from the asset disposition is reflected in the basis of the T stock as of T's acquisition date (January 1 of Year 2), and the asset is owned both immediately after the asset disposition (February 1 of Year 1) and on T's acquisition date by P1, the corporation that acquired T stock in the qualified stock purchase. Consequently, under paragraph (b) of this section, paragraph (d)(1) of this section applies to the asset and P1's basis in the asset is T's adjusted basis in the asset immediately before the sale to P1.

Example 2. Gain from section 338(h)(10) election reflected in stock basis. (a) On February 1 of Year 1, P1 makes a qualified stock purchase of T2 from T1. A section 338(h)(10) election is made for T2 and T2 recognizes gain on each of its assets. T2's gain is taken into account under §1.1502–32 in determining S's basis in the T stock. On January 1 of Year 2, P1 makes a qualified stock purchase of T from S. No section 338 election is made for T.

(b) Under paragraph (b)(2) of this section, the acquisition of the T2 stock is treated as an acquisition of T2's assets on February 1 of Year 1, because a section 338(h)(10) election is made for T2. The gain recognized by T2 under section 338(h)(10) is reflected in S's basis in the T stock as of T's acquisition date. Because the other requirements of paragraph (b) of this section are satisfied, paragraph (d)(1) of this section applies to the assets and new T2's basis in its assets is old T2's adjusted basis in the assets immediately before the disposition.

Example 3. Corporation owning asset ceases affiliation with corporation purchasing target before target acquisition date. (a) On February 1 of Year 1, T sells an asset to P1 and recognizes gain. On December 1 of Year 1, P disposes of all of the P1 stock while P1 still owns the asset. On January 1 of Year 2, P makes a qualified stock purchase of T from S. No section 338 election is made for T.

(b) Immediately after T's disposition of the asset, the asset is owned by P1 which is affiliated on that date with P, the corporation that acquired T stock in the qualified stock purchase. However, the asset is owned by a corporation (P1) that is no longer affiliated with P on T's acquisition date. Although the other requirements of paragraph (b) of this section are satisfied, the requirements of paragraph (b)(1)(iii) of this section are not satisfied. Consequently, the basis rules of paragraph (d) of this section do not apply to the asset by reason of P1's acquisition.

(c) If P acquires all of the Z stock and P1 transfers the asset to Z on or before T's acquisition date (January 1 of Year 2), the

asset is owned by an affiliate of P both on February 1 of Year 1 (P1) and on January 1 of Year 2 (Z). Consequently, all of the requirements of paragraph (b) of this section are satisfied and paragraph (d)(1) of this section applies to the asset and P1's basis in the asset is T's adjusted basis in the asset immediately before the sale to P1.

Example 4. Gain reflected in stock basis notwithstanding offsetting loss or distribution. (a) On April 1 of Year 1, T sells an asset to P1 and recognizes gain. In Year 1, T distributes an amount equal to the gain. On March 1 of Year 2, P makes a qualified stock purchase of T from S. No section 338 election is made for T.

(b) Although, as a result of the distribution, there is no adjustment with respect to the T stock under § 1.1502–32 for Year 1, T's gain from the disposition of the asset is considered reflected in S's basis in the T stock. The gain is considered to have been taken into account under § 1.1502–32 in determining the adjustments to S's basis in the T stock because S's basis in the T stock is different from what it would have been had there been no gain.

(c) If T distributes an amount equal to the gain on February 1 of Year 2, rather than in Year 1, the results would be the same because S's basis in the T stock is different from what it would have been had there been no gain. If the distribution in Year 2 is by reason of an election under § 1.1502–32(f)(2), the results would be the same.

(d) If, in Year 1, T does not make a distribution and the S group does not file a consolidated return, but, in Year 2, the S group does file a consolidated return and makes an election under § 1.1502–32(f)(2) for T, the results would be the same. S's basis in the T stock is different from what it would have been had there been no gain. Paragraph (c)(3) of this section (gain not considered reflected by reason of distributions) does not apply to the deemed distribution under the election because S and T are members of the same consolidated group. If T distributes an amount equal to the gain in Year 2 and no election is made under § 1.1502–32(f)(2), the results would be the same.

(e) If, in Year 1, T incurs an unrelated loss in an amount equal to the gain, rather than distributing an amount equal to the gain, the results would be the same because the gain is taken into account under § 1.1502–32 in determining S's basis in the T stock.

Example 5. Gain of a target affiliate reflected in stock basis after corporate reorganization. (a) On February 1 of Year 1, T3 sells an asset to P1 and recognizes gain. On March 1 of Year 1, S contributes the T3 stock to T in a transaction qualifying under section 351. On January 15 of Year 2, P1 makes a qualified stock purchase of T from S. No section 338 election is made for T.

(b) T3's gain from the asset sale is taken into account under § 1.1502–32 in determining S's basis in the T3 stock. Under section 358, the gain that is taken into account under § 1.1502–32 in determining S's basis in the T3 stock is also taken into account in determining S's basis in the T stock following S's contribution of the T3 stock to T. Consequently, under paragraph (b) of this section, paragraph (d)(1) of this section applies to the asset and P1's basis in the asset is T3's adjusted basis in the asset immediately before the sale to P1.

(c) If on March 1 of Year 1, rather than S contributing the T3 stock to T, S causes T3 to merge into T in a transaction qualifying under section 368(a)(1)(D), the results would be the same.

Example 6. Gain not reflected if election under section 338 made. (a) On February 1 of Year 1, T1 sells an asset to P1 and recognizes gain. On January 1 of Year 2, P1 makes a qualified stock purchase of T1 from T. A section 338 election (but not a section 338(h)(10) election) is made for T1.

(b) Under paragraph (c)(2) of this section, because a section 338 election is made for T1, T's basis in the T1 stock is considered not to reflect gain from the disposition. Consequently, the requirement of paragraph (b)(1)(ii) of this section is not satisfied. Thus, P1's basis in the asset is not determined under paragraph (d) of this section. Although the section 338 election for T1 results in a qualified stock purchase of T2, the requirement of paragraph (b)(1)(ii) of this section is not satisfied with respect to T2, whether or not a section 338 election is made for T2.

(c) If, on January 1 of Year 2, P1 makes a qualified stock purchase of T from S and a section 338 election for T, rather than T1, S's basis in the T stock is considered not to reflect gain from T1's disposition of the asset. However, the section 338 election for T results in a qualified stock purchase of T1. Because the gain is reflected in T's basis in the T1 stock, the requirements of paragraph (b) of this section are satisfied. Consequently, P1's basis in the asset is determined under paragraph (d)(1) of this section unless a section 338 election is also made for T1.

(f) *Extension of consistency to indirect acquisitions*—(1) *Introduction.* If an arrangement exists (see paragraph (j)(5) of this section), this paragraph (f) generally extends the consistency rules to indirect acquisitions that have the same effect as direct acquisitions. For example, this paragraph (f) applies if, pursuant to an arrangement, target sells an asset to an unrelated person who then sells the asset to the purchasing corporation.

(2) *General rule.* This paragraph (f) applies to an asset if, pursuant to an arrangement—

(i) The asset is disposed of during the target consistency period;

(ii) The basis of target stock as of, or at any time before, the target acquisition date reflects gain from the disposition of the asset; and

(iii) The asset ownership requirements of paragraph (b)(1)(iii) of this section are not satisfied, but the asset is owned, at any time during the portion of the target consistency period following the target acquisition date, by—

(A) A corporation—

(*1*) The basis of whose stock, as of, or at any time before, the target acquisition date, reflects gain from the disposition of the asset; and

(*2*) That is affiliated, at any time during the target consistency period, with a corporation that acquires stock of target in the qualified stock purchase; or

(B) A corporation that at the time it owns the asset is affiliated with a corporation described in paragraph (f)(2)(iii)(A) of this section.

(3) *Basis of acquired assets.* If this paragraph (f) applies to an asset, the principles of the basis rules of paragraph (d) of this section apply to the asset as of the date, following the disposition with respect to which gain is reflected in the basis of target's stock, that the asset is first owned by a corporation described in paragraph (f)(2)(iii) of this section. If the principles of the carryover basis rule of paragraph (d)(1) of this section apply to an asset, the asset's basis also is reduced (but not below zero) by the amount of any reduction in its basis occurring after the disposition with respect to which gain is reflected in the basis of target's stock.

(4) *Examples.* This paragraph (f) may be illustrated by the following examples:

Example 1. Acquisition of asset from unrelated party by purchasing corporation. (a) On February 1 of Year 1, T sells an asset to Z and recognizes gain. On February 15 of Year 1, P1 makes a qualified stock purchase of T from S. No section 338 election is made for T. P1 buys the asset from Z on March 1 of Year 1, before Z has reduced the basis of the asset through depreciation or otherwise.

(b) Paragraph (b) of this section does not apply to the asset because the asset ownership requirements of paragraph (b)(1)(iii) of this section are not satisfied. However, the asset ownership requirements of paragraph (f)(2)(iii) of this section are satisfied because, during the portion of T's consistency period following T's acquisition date, the asset is owned by P1 while it is affiliated with T. Consequently, paragraph (f) of this section applies to the asset if there is an arrangement for T to dispose of the asset during T's consistency period, for the gain to be reflected in S's basis in the T stock as of T's acquisition date, and for P1 to own the asset during the portion of T's consistency period following T's acquisition date. If the arrangement exists, under paragraph (f)(3) of this section, P1's basis in the asset is determined as of March 1 of Year 1, under the principles of paragraph (d) of this section. Consequently, P1's basis in the asset is T's adjusted basis in the asset immediately before the sale to Z.

(c) If P1 acquires the asset from Z on January 15 of Year 2 (rather than on March 1 of Year 1), and Z's basis in the asset has been reduced through depreciation at the time of the acquisition, P1's basis in the asset as of January 15 of Year 2 would be T's adjusted basis in the asset immediately before the sale to Z, reduced (but not below zero) by the amount of the depreciation. Z's basis and depreciation are determined without taking into account the basis rules of paragraph (d) of this section.

(d) If P, rather than P1, acquires the asset from Z, the results would be the same.

(e) If, on March 1 of Year 1, P1 acquires the Z stock, rather than acquiring the asset from Z, paragraph (f) of this section would apply to the asset if an arrangement exists. However, under paragraph (f)(3) of this section, Z's basis in the asset would be determined as of February 1 of Year 1, the date the asset is first owned by a corporation (Z) described in paragraph (f)(2)(iii) of this section. Consequently, Z's basis in the asset as of February 1 of Year 1, determined under the principles of paragraph (d) of this section, would be T's adjusted basis in the asset immediately before the sale to Z.

Example 2. Acquisition of asset from target by target affiliate. (a) On February 1 of Year 1, T contributes an asset to T1 in a transaction qualifying under section 351 and in which T recognizes gain under section 351(b) that is deferred under § 1.1502–13. On March 1 of Year 1, P1 makes a qualified stock purchase of T from S and, pursuant to § 1.1502–13, the deferred gain is taken into account by T immediately before T ceases to be a member of the S group. No section 338 election is made for T.

(b) Paragraph (b) of this section does not apply to the asset because the asset ownership requirements of paragraph (b)(1)(iii) of this section are not satisfied.

(c) T1 is not described in paragraph (f)(2)(iii)(A) of this section because the basis of the T1 stock does not reflect gain from the disposition of the asset. Although, under section 358(a)(1)(B)(ii), T's basis in the T1 stock is increased by the amount of the gain, the gain is not taken into account directly or indirectly under § 1.1502–32 in determining T's basis in the T1 stock.

(d) T1 is described in paragraph (f)(2)(iii)(B) of this section because, during the portion of T's consistency period following T's acquisition date, T1 owns the asset while it is affiliated with T, a corporation described in paragraph (f)(2)(iii)(A) of this section. Consequently, paragraph (f) of this section applies to the asset if there is an arrangement. Under paragraph (j)(5) of this section, the fact that, at the time T1 acquires the asset from T, T1 is related (within the meaning of section 267(b)) to T indicates that an arrangement exists.

Example 3. Acquisition of asset from target and indirect acquisition of target stock. (a) On February 1 of Year 1, T sells an asset to P1 and recognizes gain. On March 1 of Year 1, Z makes a qualified stock purchase of T from S. No section 338 election is made for T. On January 1 of Year 2, P1 acquires the T stock from Z other than in a qualified stock purchase.

(b) The asset ownership requirements of paragraph (b)(1)(iii) of this section are not satisfied because the asset was never owned by Z, the corporation that acquired T stock in the qualified stock purchase (or by a corporation that was affiliated with Z at the time it owned the asset). However, because the asset is owned by P1 while it is affiliated with T during the portion of T's consistency period following T's acquisition date, paragraph (f) of this section applies to the asset if there is an arrangement. If there is an arrangement, the principles of the carryover basis rule of paragraph (d)(1) of this section apply to determine P1's basis in the asset unless Z makes a section 338 election for T. See paragraph (c)(2) of this section.

(c) If P1 also makes a qualified stock purchase of T from Z, the results would be the same. If there is an arrangement, the principles of the carryover basis rule of paragraph (d)(1) of this section apply to determine P1's basis in the asset unless Z makes a section 338 election for T. However, these principles apply to determine P1's basis in the asset if P1, but not Z, makes a section 338 election for T. The basis of the T stock no longer reflects, as of T's acquisition date by P1, the gain from the disposition of the asset.

(d) Assume Z purchases the T stock other than in a qualified stock purchase and P1 makes a qualified stock purchase of T from Z. Paragraph (b) of this section does not apply to the asset because gain from the disposition of the asset is not reflected in the basis of T's stock as of T's acquisition date (January 1 of Year 2). However, because the gain is reflected in S's basis in the T stock before T's acquisition date and the asset is owned by P1 while it is affiliated with T during the portion of T's consistency period following T's acquisition date, paragraph (f) of this section applies to the asset if there is an arrangement. If there is an arrangement, the principles of the carryover basis rule of paragraph (d)(1) of this section apply to determine P1's basis in the asset even if P1 makes a section 338 election for T. The basis of the T stock no longer reflects, as of T's acquisition date, the gain from the disposition of the asset.

Example 4. Asset acquired from target affiliate by corporation that becomes its affiliate.(a) On February 1 of Year 1, T1 sells an asset to P1 and recognizes gain. On February 15 of Year 1, Z makes a qualified stock purchase of T from S. No section 338 election is made for T. On June 1 of Year 1, P1 acquires the T1 stock from T, other than in a qualified stock purchase.

(b) The asset ownership requirements of paragraph (b)(1)(iii) of this section are not satisfied because the asset was never owned by Z, the corporation that acquired T stock in the qualified stock purchase (or by a corporation that was affiliated with Z at the time it owned the asset).

(c) P1 is not described in paragraph (f)(2)(iii)(A) of this section because gain from the disposition of the asset is not reflected in the basis of the P1 stock.

(d) P1 is described in paragraph (f)(2)(iii)(B) of this section because the asset is owned by P1 while P1 is affiliated with T1 during the portion of T's consistency period following T's acquisition date. T1 becomes affiliated with Z, the corporation that acquired T stock in the qualified stock purchase, during T's consistency period, and, as of T's acquisition date, the basis of T1's stock reflects gain from the disposition of the asset. Consequently, paragraph (f) of this section applies to the asset if there is an arrangement.

Example 5. De minimis rules.(a) On February 1 of Year 1, T sells an asset to P and recognizes gain. On February 15 of Year 1, T1 sells an asset to Z and recognizes gain. The aggregate amount realized by T and T1 on their respective sales of assets is not more than $250,000. On March 1 of Year 1, T3 sells an asset to P and recognizes gain. On April 1 of Year 1, P makes a qualified stock purchase of T from S. No section 338 election is made for T. On June 1 of Year 1, P1 buys from Z the asset sold by T1.

(b) Under paragraph (b) of this section, the basis rules of paragraph (d) of this section

apply to the asset sold by T. Under paragraph (f) of this section, the principles of the basis rules of paragraph (d) of this section apply to the asset sold by T1 if there is an arrangement. Because T3's gain is not reflected in the basis of the T stock, the basis rules of this section do not apply to the asset sold by T3.

(c) The de minimis rule of paragraph (d)(3) of this section applies to an asset if the asset is not disposed of as part of the same arrangement as the acquisition of T and the aggregate amount realized for all assets otherwise subject to the carryover basis rules does not exceed $250,000. The aggregate amount realized by T and T1 does not exceed $250,000. (The asset sold by T3 is not taken into account for purposes of the de minimis rule.) Thus, the de minimis rule applies to the asset sold by T if the asset is not disposed of as part of the same arrangement as the acquisition of T.

(d) If, under paragraph (f) of this section, the principles of the carryover basis rules of paragraph (d)(1) of this section otherwise apply to the asset sold by T1 because of an arrangement, the de minimis rules of this section do not apply to the asset because of the arrangement.

(e) Assume on June 1 of Year 1, Z acquires the T1 stock from T, other than in a qualified stock purchase, rather than P1 buying the T1 asset, and paragraph (f) of this section applies because there is an arrangement. Because the asset was disposed of and the T1 stock was acquired as part of the arrangement, the de minimis rules of this section do not apply to the asset.

(g) *Extension of consistency if dividends qualifying for 100 percent dividends received deduction are paid*—(1) *General rule for direct acquisitions from target.* Unless a section 338 election is made for target, the basis rules of paragraph (d) of this section apply to an asset if—

(i) Target recognizes gain (whether or not deferred) on disposition of the asset during the portion of the target consistency period that ends on the target acquisition date;

(ii) The asset is owned, immediately after the asset disposition and on the target acquisition date, by a corporation that acquires stock of target in the qualified stock purchase (or by an affiliate of an acquiring corporation); and

(iii) During the portion of the target consistency period that ends on the target acquisition date, the aggregate amount of dividends paid by target, to which section 243(a)(3) applies, exceeds the greater of—

(A) $250,000; or

(B) 125 percent of the yearly average amount of dividends paid by target, to which section 243(a)(3) applies, during the three calendar years immediately preceding the year in which the target consistency period begins (or, if shorter, the period target was in existence).

(2) *Other direct acquisitions having same effect.* The basis rules of paragraph (d) of this section also apply to an asset if the effect of a transaction described in paragraph (g)(1) of this section is achieved through any combination of disposition of assets and payment of dividends to which section 243(a)(3) applies (or any other dividends eligible for a 100 percent dividends received deduction). See paragraph (h)(4) of this section for additional rules relating to target affiliates that are controlled foreign corporations.

(3) *Indirect acquisitions.* The principles of paragraph (f) of this section also apply for purposes of this paragraph (g).

(4) *Examples.* This paragraph (g) may be illustrated by the following examples:

Example 1. Asset acquired from target paying dividends to which section 243(a)(3) applies.(a) The S group does not file a consolidated return. In Year 1, Year 2, and Year 3, T pays dividends to S to which section 243(a)(3) applies of $200,000, $250,000, and $300,000, respectively. On February 1 of Year 4, T sells an asset to P and recognizes gain. On January 1 of Year 5, P makes a qualified stock purchase of T from S. No section 338 election is made for T. During the portion of T's consistency period that ends on T's acquisition date, T pays S dividends to which section 243(a)(3) applies of $1,000,000.

(b) Under paragraph (g)(1) of this section, paragraph (d) of this section applies to the asset. T recognizes gain on disposition of the asset during the portion of T's consistency period that ends on T's acquisition date, the asset is owned by P immediately after the disposition and on T's acquisition date, and T pays dividends described in paragraph (g)(1)(iii) of this section. Consequently, under paragraph (d)(1) of this section, P's basis in the asset is T's adjusted basis in the asset immediately before the sale to P.

(c) If T is a controlled foreign corporation, the results would be the same if T pays dividends in the amount described in paragraph (g)(1)(iii) of this section that qualify for a 100 percent dividends received deduction. See sections 243(e) and 245.

(d) If S and T3 file a consolidated return in which T, T1, and T2 do not join, the results

would be the same because the dividends paid by T are still described in paragraph (g)(1)(iii) of this section.

(e) If T, T1, and T2 file a consolidated return in which S and T3 do not join, the results would be the same because the dividends paid by T are still described in paragraph (g)(1)(iii) of this section.

Example 2. Asset disposition by target affiliate achieving same effect.(a) The S group does not file a consolidated return. On February 1 of Year 1, T2 sells an asset to P and recognizes gain. T pays dividends to S described in paragraph (g)(1)(iii) of this section. On January 1 of Year 2, P makes a qualified stock purchase of T from S. No section 338 election is made for T.

(b) Paragraph (g)(1) of this section does not apply to the asset because T did not recognize gain on the disposition of the asset. However, under paragraph (g)(2) of this section, because the asset disposition by T2 and the dividends paid by T achieve the effect of a transaction described in paragraph (g)(1) of this section, the carryover basis rule of paragraph (d)(1) of this section applies to the asset. The effect was achieved because T2 is a lower-tier affiliate of T and the dividends paid by T to S reduce the value to S of T and its lower-tier affiliates.

(c) If T2 is a controlled foreign corporation, the results would be the same because T2 is a lower-tier affiliate of T and the dividends paid by T to S reduce the value to S of T and its lower-tier affiliates.

(d) If P buys an asset from T3, rather than T2, the asset disposition and the dividends do not achieve the effect of a transaction described in paragraph (g)(1) of this section because T3 is not a lower-tier affiliate of T. Thus, the basis rules of paragraph (d) of this section do not apply to the asset. The results would be the same whether or not P also acquires the T3 stock (whether or not in a qualified stock purchase).

Example 3. Dividends by target affiliate achieving same effect.(a) The S group does not file a consolidated return. On February 1 of Year 1, T1 sells an asset to P and recognizes gain. On January 1 of Year 2, P makes a qualified stock purchase of T from S. No section 338 election is made for T. T does not pay dividends to S described in paragraph (g)(1)(iii) of this section. However, T1 pays dividends to T that would be described in paragraph (g)(1)(iii) of this section if T1 were a target.

(b) Paragraph (g)(1) of this section does not apply to the asset because T did not recognize gain on the disposition of the asset and did not pay dividends described in paragraph (g)(1)(iii) of this section. Further, paragraph (g)(2) of this section does not apply because the dividends paid by T1 to T do not reduce the value to S of T and its lower-tier affiliates.

(c) If both S and T own T1 stock and T1 pays dividends to S that would be described in paragraph (g)(1)(iii) of this section if T1 were a target, paragraph (g)(2) of this section would apply because the dividends paid by T1 to S reduce the value to S of T and its lower-tier affiliates. If T, rather than T1, sold the asset to P, the results would be the same. Further, if T and T1 pay dividends to S that, only when aggregated, would be described in paragraph (g)(1)(iii) of this section (if they were all paid by T), the results would be the same.

Example 4. Gain reflected by reason of dividends.(a) S and T file a consolidated return in which T1 and T2 do not join. On February 1 of Year 1, T1 sells an asset to P and recognizes gain. On January 1 of Year 2, P makes a qualified stock purchase of T from S. No section 338 election is made for T. T1 pays dividends to T that would be described in paragraph (g)(1)(iii) of this section if T1 were a target.

(b) The requirements of paragraph (b) of this section are not satisfied because, under paragraph (c)(3) of this section, gain from T1's sale is not reflected in S's basis in the T stock by reason of the dividends paid by T1 to T.

(c) Although the dividends paid by T1 to T do not reduce the value to S of T and its lower-tier affiliates, paragraph (g)(2) of this section applies because the dividends paid by T1 to T are taken into account under § 1.1502–32 in determining S's basis in the T stock. Consequently, the carryover basis rule of paragraph (d)(1) of this section applies to the asset.

(h) *Consistency for target affiliates that are controlled foreign corporations*—(1) *In general.* This paragraph (h) applies only if target is a domestic corporation. For additional rules that may apply with respect to controlled foreign corporations, see paragraph (g) of this section. The definitions and nomenclature of § 1.338–1 (b) and (c) and paragraph (e) of this section apply for purposes of this section.

(2) *Income or gain resulting from asset dispositions*—(i) *General rule.* Income or gain of a target affiliate that is a controlled foreign corporation from the disposition of an asset is not reflected in the basis of target stock under paragraph (c) of this section unless the income or gain results in an inclusion under section 951(a)(1)(A), 951(a)(1)(C), 1291 or 1293.

(ii) *Basis of controlled foreign corporation stock.* If, by reason of paragraph (h)(2)(i) of this section, the carryover basis rules of this section apply to an

asset, no increase in basis in the stock of a controlled foreign corporation under section 961(a) or 1293(d)(1), or under regulations issued pursuant to section 1297(b)(5), is allowed to target or a target affiliate to the extent the increase is attributable to income or gain described in paragraph (h)(2)(i) of this section. A similar rule applies to the basis of any property by reason of which the stock of the controlled foreign corporation is considered owned under section 958(a)(2) or 1297(a).

(iii) *Operating rule.* For purposes of this paragraph (h)(2)—

(A) If there is an income inclusion under section 951 (a)(1)(A) or (C), the shareholder's income inclusion is first attributed to the income or gain of the controlled foreign corporation from the disposition of the asset to the extent of the shareholder's pro rata share of such income or gain; and

(B) Any income or gain under section 1293 is first attributed to the income or gain from the disposition of the asset to the extent of the shareholder's pro rata share of the income or gain.

(iv) *Increase in asset or stock basis*—(A) If the carryover basis rules under paragraph (h)(2)(i) of this section apply to an asset, and the purchasing corporation disposes of the asset to an unrelated party in a taxable transaction and recognizes and includes in its U.S. gross income or the U.S. gross income of its shareholders the greater of the income or gain from the disposition of the asset by the selling controlled foreign corporation that was reflected in the basis of the target stock under paragraph (c) of this section, or the gain recognized on the asset by the purchasing corporation on the disposition of the asset, then the purchasing corporation or the target or a target affiliate, as appropriate, shall increase the basis of the selling controlled foreign corporation stock subject to paragraph (h)(2)(ii) of this section, as of the date of the disposition of the asset by the purchasing corporation, by the amount of the basis increase that was denied under paragraph (h)(2)(ii) of this section. The preceding sentence shall apply only to the extent that the controlled foreign corporation stock is owned (within the meaning of section 958(a)) by a member of the purchasing corporation's affiliated group.

(B) If the carryover basis rules under paragraph (h)(2)(i) of this section apply to an asset, and the purchasing corporation or the target or a target affiliate, as appropriate, disposes of the stock of the selling controlled foreign corporation to an unrelated party in a taxable transaction and recognizes and includes in its U.S. gross income or the U.S. gross income of its shareholders the greater of the gain equal to the basis increase that was denied under paragraph (h)(2)(ii) of this section, or the gain recognized in the stock by the purchasing corporation or by the target or a target affiliate, as appropriate, on the disposition of the stock, then the purchasing corporation shall increase the basis of the asset, as of the date of the disposition of the stock of the selling controlled foreign corporation by the purchasing corporation or by the target or a target affiliate, as appropriate, by the amount of the basis increase that was denied pursuant to paragraph (h)(2)(i) of this section. The preceding sentence shall apply only to the extent that the asset is owned (within the meaning of section 958(a)) by a member of the purchasing corporation's affiliated group.

(3) *Stock issued by target affiliate that is a controlled foreign corporation.* The exception to the carryover basis rules of this section provided in paragraph (d)(2)(iii) of this section does not apply to stock issued by a target affiliate that is a controlled foreign corporation. After applying the carryover basis rules of this section to the stock, the basis in the stock is increased by the amount treated as a dividend under section 1248 on the disposition of the stock (or that would have been so treated but for section 1291), except to the extent the basis increase is attributable to the disposition of an asset in which a carryover basis is taken under this section.

(4) *Certain distributions*—(i) *General rule.* In the case of a target affiliate that is a controlled foreign corporation, paragraph (g) of this section applies with respect to the target affiliate by treating any reference to a dividend to which section 243(a)(3) applies as a reference to any amount taken

into account under § 1.1502–32 in determining the basis of target stock that is—

(A) A dividend;

(B) An amount treated as a dividend under section 1248 (or that would have been so treated but for section 1291); or

(C) An amount included in income under section 951(a)(1)(B).

(ii) *Basis of controlled foreign corporation stock.* If the carryover basis rules of this section apply to an asset, the basis in the stock of the controlled foreign corporation (or any property by reason of which the stock is considered owned under section 958(a)(2)) is reduced (but not below zero) by the sum of any amounts that are treated, solely by reason of the disposition of the asset, as a dividend, amount treated as a dividend under section 1248 (or that would have been so treated but for section 1291), or amount included in income under section 951(a)(1)(B). For this purpose, any dividend, amount treated as a dividend under section 1248 (or that would have been so treated but for section 1291), or amount included in income under section 951(a)(1)(B) is considered attributable first to earnings and profits resulting from the disposition of the asset.

(iii) *Increase in asset or stock basis*—(A) If the carryover basis rules under paragraphs (g) and (h)(4)(i) of this section apply to an asset, and the purchasing corporation disposes of the asset to an unrelated party in a taxable transaction and recognizes and includes in its U.S. gross income or the U.S. gross income of its shareholders the greater of the gain equal to the basis increase denied in the asset pursuant to paragraphs (g) and (h)(4)(i) of this section, or the gain recognized on the asset by the purchasing corporation on the disposition of the asset, then the purchasing corporation or the target or a target affiliate, as appropriate, shall increase the basis of the selling controlled foreign corporation stock subject to paragraph (h)(4)(ii) of this section, as of the date of the disposition of the asset by the purchasing corporation, by the amount of the basis reduction under paragraph (h)(4)(ii) of this section. The preceding sentence shall apply only to the extent that the controlled foreign corporation stock is owned (within the meaning of section 958(a)) by a member of the purchasing corporation's affiliated group.

(B) If the carryover basis rules under paragraphs (g) and (h)(4)(i) of this section apply to an asset, and the purchasing corporation or the target or a target affiliate, as appropriate, disposes of the stock of the selling controlled foreign corporation to an unrelated party in a taxable transaction and recognizes and includes in its U.S. gross income or the U.S. gross income of its shareholders the greater of the amount of the basis reduction under paragraph (h)(4)(ii) of this section, or the gain recognized in the stock by the purchasing corporation or by the target or a target affiliate, as appropriate, on the disposition of the stock, then the purchasing corporation shall increase the basis of the asset, as of the date of the disposition of the stock of the selling controlled foreign corporation by the purchasing corporation or by the target or a target affiliate, as appropriate, by the amount of the basis increase that was denied pursuant to paragraphs (g) and (h)(4)(i) of this section. The preceding sentence shall apply only to the extent that the asset is owned (within the meaning of section 958(a)) by a member of the purchasing corporation's affiliated group.

(5) *Examples.* This paragraph (h) may be illustrated by the following examples:

Example 1. Stock of target affiliate that is a CFC.(a) The S group files a consolidated return; however, T2 is a controlled foreign corporation. On December 1 of Year 1, T1 sells the T2 stock to P and recognizes gain. On January 2 of Year 2, P makes a qualified stock purchase of T from S. No section 338 election is made for T.

(b) Under paragraph (b)(1) of this section, paragraph (d) of this section applies to the T2 stock. Under paragraph (h)(3) of this section, paragraph (d)(2)(iii) of this section does not apply to the T2 stock. Consequently, paragraph (d)(1) of this section applies to the T2 stock. However, after applying paragraph (d)(1) of this section, P's basis in the T2 stock is increased by the amount of T1's gain on the sale of the T2 stock that is treated as a dividend under section 1248. Because P has a carryover basis in the T2 stock, the T2 stock is not considered purchased within the meaning of section 338(h)(3) and no section 338 election may be made for T2.

Example 2. Stock of target affiliate CFC; inclusion under subpart F.(a) The S group files a consolidated return; however, T2 is a controlled foreign corporation. On December 1 of Year 1, T2 sells an asset to P and recognizes subpart F income that results in an inclusion in T1's gross income under section 951(a)(1)(A). On January 2 of Year 2, P makes a qualified stock purchase of T from S. No section 338 election is made for T.

(b) Because gain from the disposition of the asset results in an inclusion under section 951(a)(1)(A), the gain is reflected in the basis of the T stock as of T's acquisition date. See paragraph (h)(2)(i) of this section. Consequently, under paragraph (b)(1) of this section, paragraph (d)(1) of this section applies to the asset. In addition, under paragraph (h)(2)(ii) of this section, T1's basis in the T2 stock is not increased under section 961(a) by the amount of the inclusion that is attributable to the sale of the asset.

(c) If, in addition to making a qualified stock purchase of T, P acquires the T2 stock from T1 on January 1 of Year 2, the results are the same for the asset sold by T2. In addition, under paragraph (h)(2)(ii) of this section, T1's basis in the T2 stock is not increased by the amount of the inclusion that is attributable to the gain on the sale of the asset. Further, under paragraph (h)(3) of this section, paragraph (d)(1) of this section applies to the T2 stock. However, after applying paragraph (d)(1) of this section, P's basis in the T2 stock is increased by the amount of T1's gain on the sale of the T2 stock that is treated as a dividend under section 1248. Finally, because P has a carryover basis in the T2 stock, the T2 stock is not considered purchased within the meaning of section 338(h)(3) and no section 338 election may be made for T2.

(d) If P makes a qualified stock purchase of T2 from T1, rather than of T from S, and T1's gain on the sale of T2 is treated as a dividend under section 1248, under paragraph (h)(1) of this section, paragraphs (h)(2) and (3) of this section do not apply because there is no target that is a domestic corporation. Consequently, the carryover basis rules of paragraph do not apply to the asset sold by T2 or the T2 stock.

Example 3. Gain reflected by reason of section 1248 dividend; gain from non-subpart F asset.(a) The S group files a consolidated return; however, T2 is a controlled foreign corporation. In Years 1 through 4, T2 does not pay any dividends to T1 and no amount is included in T1's income under section 951(a)(1)(B). On December 1 of Year 4, T2 sells an asset with a basis of $400,000 to P for $900,000. T2's gain of $500,000 is not subpart F income. On December 15 of Year 4, T1 sells T2, in which it has a basis of $600,000, to P for $1,600,000. Under section 1248, $800,000 of T1's gain of $1,000,000 is treated as a dividend. However, in the absence of the sale of the asset by T2 to P, only $300,000 would have been treated as a dividend under section 1248. On December 30 of Year 4, P makes a qualified stock purchase of T1 from T. No section 338 election is made for T1.

(b) Under paragraph (h)(4) of this section, paragraph (g)(2) of this section applies by reference to the amount treated as a dividend under section 1248 on the disposition of the T2 stock. Because the amount treated as a dividend is taken into account in determining T's basis in the T1 stock under § 1.1502–32, the sale of the T2 stock and the deemed dividend have the effect of a transaction described in paragraph (g)(1) of this section. Consequently, paragraph (d)(1) of this section applies to the asset sold by T2 to P and P's basis in the asset is $400,000 as of December 1 of Year 4.

(c) Under paragraph (h)(3) of this section, paragraph (d)(1) of this section applies to the T2 stock and P's basis in the T2 stock is $600,000 as of December 15 of Year 4. Under paragraphs (h)(3) and (4)(ii) of this section, however, P's basis in the T2 stock is increased by $300,000 (the amount of T1's gain treated as a dividend under section 1248 ($800,000), other than the amount treated as a dividend solely as a result of the sale of the asset by T2 to P ($500,000)) to $900,000.

(i) [Reserved]

(j) *Anti-avoidance rules.* For purposes of this section—

(1) *Extension of consistency period.* The target consistency period is extended to include any continuous period that ends on, or begins on, any day of the consistency period during which a purchasing corporation, or any person related, within the meaning of section 267(b) or 707(b)(1), to a purchasing corporation, has an arrangement—

(i) To purchase stock of target; or

(ii) To own an asset to which the carryover basis rules of this section apply, taking into account the extension.

(2) *Qualified stock purchase and 12-month acquisition period.* The 12-month acquisition period is extended if, pursuant to an arrangement, a corporation acquires by purchase stock of another corporation satisfying the requirements of section 1504(a)(2) over a period of more than 12 months.

(3) *Acquisitions by conduits*—(i) *Asset ownership*—(A) *General rule.* A corporation is treated as owning any portion of an asset attributed to the corporation from a conduit under section 318(a) (treating any asset as stock for this purpose), for purposes of—

(*1*) The asset ownership requirements of this section; and

(*2*) Determining whether a controlled foreign corporation is a target affiliate for purposes of paragraph (h) of this section.

(B) *Application of carryover basis rule.* If the basis rules of this section apply to the asset, the basis rules of this section apply to the entire asset (not just the portion for which ownership is attributed).

(ii) *Stock acquisitions*—(A) *Purchase by conduit.* A corporation is treated as purchasing stock of another corporation attributed to the corporation from a conduit under section 318(a) on the day the stock is purchased by the conduit. The corporation is not treated as purchasing the stock, however, if the conduit purchased the stock more than two years before the date the stock is first attributed to the corporation.

(B) *Purchase of conduit by corporation.* If a corporation purchases an interest in a conduit (treating the interest as stock for this purpose), the corporation is treated as purchasing on that date any stock owned by a conduit on that date and attributed to the corporation under section 318(a) with respect to the interest in the conduit that was purchased.

(C) *Purchase of conduit by conduit.* If a conduit (the *first* conduit) purchases an interest in a second conduit (treating the interest as stock for this purpose), the first conduit is treated as purchasing on that date any stock owned by a conduit on that date and attributed to the first conduit under section 318(a) with respect to the interest in the second conduit that was purchased.

(4) *Conduit.* A person (other than a corporation) is a conduit as to a corporation if—

(i) The corporation would be treated under section 318(a)(2)(A) and (B) (attribution from partnerships, estates, and trusts) as owning any stock owned by the person; and

(ii) The corporation, together with its affiliates, would be treated as owning an aggregate of at least 50 percent of the stock owned by the person.

(5) *Existence of arrangement.* The existence of an arrangement is determined under all the facts and circumstances. For an arrangement to exist, there need not be an enforceable, written, or unconditional agreement, and all the parties to the transaction need not have participated in each step of the transaction. One factor indicating the existence of an arrangement is the participation of a related party. For this purpose, persons are related if they are related within the meaning of section 267(b) or 707(b)(1).

(6) *Predecessor and successor*—(i) *Persons.* A reference to a person (including target, target affiliate, and purchasing corporation) includes, as the context may require, a reference to a predecessor or successor. For this purpose, a predecessor is a transferor or distributor of assets to a person (the successor) in a transaction—

(A) To which section 381(a) applies; or

(B) In which the successor's basis for the assets is determined, directly or indirectly, in whole or in part, by reference to the basis of the transferor or distributor.

(ii) *Assets.* A reference to an asset (the first asset) includes, as the context may require, a reference to any asset the basis of which is determined, directly or indirectly, in whole or in part, by reference to the first asset.

(7) *Examples.* This paragraph (j) may be illustrated by the following examples:

Example 1. Asset owned by conduit treated as owned by purchaser of target stock.(a) P owns a 60-percent interest in Y. On March 1 of Year 1, T sells an asset to Y and recognizes gain. On January 1 of Year 2, P makes a qualified stock purchase of T from S. No section 338 election is made for T.

(b) Under paragraph (j)(4) of this section, Y is a conduit with respect to P. Consequently, under paragraph (j)(3)(i)(A) of this section, P is treated as owning 60% of the asset on March 1 of Year 1 and January 1 of Year 2. Because P is treated as owning part or all of the asset both immediately after the asset disposition and on T's acquisition date, paragraph (b) of this section applies to the asset. Consequently, paragraph (d)(1) of this section applies to the asset and Y's basis in the asset is T's adjusted basis in the asset immediately before the sale to Y.

Example 2. Corporation whose stock is owned by conduit treated as affiliate.(a) P owns an 80-percent interest in Y. Y owns all of the stock of Z. On March 1 of Year 1, T sells an asset to Z and recognizes gain. On January 1 of Year 2, P makes a qualified stock purchase of T from S. No section 338 election is made for T.

(b) Under paragraph (j)(4) of this section, Y is a conduit with respect to P. Consequently,

under paragraph (j)(3)(i)(A) of this section, P is treated as owning 80% of the Z stock and Z is therefore treated as an affiliate of P for purposes of applying the asset ownership requirements of paragraph (b)(1)(iii) of this section. Because Z, an affiliate of P, owns the asset both immediately after the asset disposition and on T's acquisition date, paragraph (b) of this section applies to the asset, and the asset's basis is determined under paragraph (d) of this section.

(c) If, instead of owning an 80-percent interest in Y, P owned a 79-percent interest in Y, Z would not be treated as an affiliate of P and paragraph (b) of this section would not apply to the asset.

Example 3. Qualified stock purchase by reason of stock purchase by conduit.(a) P owns a 90-percent interest in Y. Y owns a 60-percent interest in Y1. On February 1 of Year 2, T sells an asset to P and recognizes gain. On January 1 of Year 3, P purchases 70% of the T stock from S and Y1 purchases the remaining 30% of the T stock from S.

(b) Under paragraph (j)(3)(ii)(A) of this section, P is treated as purchasing on January 1 of Year 3, the 16.2% of the T stock that is attributed to P from Y and Y1 under section 318(a). Thus, for purposes of this section, P is treated as making a qualified stock purchase of T on January 1 of Year 3, paragraph (b) of this section applies to the asset, and the asset's basis is determined under paragraph (d) of this section. However, because P is not treated as having made a qualified stock purchase of T for purposes of making an election under section 338, no election can be made for T.

(c) If Y1 purchases 20% of the T stock from S on December 1 of Year 1, rather than 30% on January 1 of Year 3, P would be treated as purchasing 10.8% of the T stock on December 1 of Year 1. Thus, if paragraph (j)(2) of this section (relating to extension of the 12-month acquisition period) does not apply, P would not be treated as making a qualified stock purchase of T, because P is not treated as purchasing T stock satisfying the requirements of section 1504(a)(2) within a 12-month period.

Example 4. Successor asset.(a) On February 1 of Year 1, T sells stock of X to P1 and recognizes gain. On December 1 of Year 1, P1 exchanges its X stock for stock in new X in a reorganization qualifying under section 368(a)(1)(F). On January 1 of Year 2, P1 makes a qualified stock purchase of T from S. No section 338 election is made for T.

(b) The asset ownership requirements of paragraph (b)(1)(iii) of this section are satisfied because, under paragraph (j)(6)(ii) of this section, P1 is treated as owning the X stock on T's acquisition date. P1 is treated as owning the X stock on that date because P1 owns the new X stock and P1's basis in the new X stock is determined by reference to P1's basis in the X stock. Consequently, under paragraph (d)(1) of this section, P1's basis in the X stock on February 1 of Year 1 is T's adjusted basis in the X stock immediately before the sale to P1.

[T.D. 8515, 59 FR 2972, Jan. 20, 1994, as amended by T.D. 8597, 60 FR 36679, July 18, 1995; T.D. 8710, 62 FR 3459, Jan. 23, 1997]

§ 1.338–5 International aspects of section 338.

(a) *Scope.* This section provides guidance regarding international aspects of section 338. As provided in § 1.338–1(c)(14), a foreign corporation, a DISC, or a corporation for which a section 936 election has been made is considered a target affiliate for all purposes of section 338. In addition, stock described in section 338(h)(6)(B)(ii) held by a target affiliate is not excluded from the operation of section 338.

(b) *Application of section 338 to foreign targets*—(1) *In general.* For purposes of subtitle A, the deemed sale gain, as defined in § 1.338–3(b)(4), of a foreign target for which a section 338 election is made (FT), and the corresponding earnings and profits, are taken into account in determining the taxation of FT and FT's direct and indirect shareholders. See, however, section 338(h)(16). For example, the income and earnings and profits of FT are determined, for purposes of sections 551, 951, 1248, and 1293, by taking into account the deemed sale gain.

(2) *Ownership of FT stock on the acquisition date.* A person who transfers FT stock to the purchasing corporation on FT's acquisition date is considered to own the transferred stock at the close of FT's acquisition date. See, e.g., § 1.951–1(f) (relating to determination of holding period for purposes of sections 951 through 964). If on the acquisition date the purchasing corporation owns a block of FT stock that was acquired before FT's acquisition date, the purchasing corporation is considered to own such block of stock at the close of the acquisition date.

(3) *Carryover FT stock*—(i) *Definition.* FT stock is carryover FT stock if—

(A) FT was a controlled foreign corporation within the meaning of section 957 (taking into account section 953(c)) at any time during the portion of the 12-month acquisition period that ends on the acquisition date; and

(B) Such stock is owned as of the beginning of the day after FT's acquisition date by a person other than a purchasing corporation, or by a purchasing corporation if the stock is nonrecently purchased and is not subject to a gain recognition election under § 1.338(b)–1(e)(2).

(ii) *Carryover of earnings and profits.* The earnings and profits of old FT (and associated foreign taxes) attributable to the carryover FT stock (adjusted to reflect deemed sale gain) carry over to new FT solely for purposes of—

(A) Characterizing an actual distribution with respect to a share of carryover FT stock as a dividend;

(B) Characterizing gain on a post-acquisition date transfer of a share of carryover FT stock as a dividend under section 1248 (if such section is otherwise applicable);

(C) Characterizing an investment of earnings in United States property as income under sections 951(a)(1)(B) and 956 (if such sections are otherwise applicable); and

(D) Determining foreign taxes deemed paid under sections 902 and 960 with respect to the amount treated as a dividend or income by virtue of this paragraph (b)(3)(ii) (subject to the operation of section 338(h)(16)).

(iii) *Cap on carryover of earnings and profits.* The amount of earnings and profits of old FT taken into account with respect to a share of carryover FT stock is limited to the amount that would have been included in gross income of the owner of such stock as a dividend under section 1248 if—

(A) The shareholder transferred that share to the purchasing corporation on FT's acquisition date for a consideration equal to the fair market value of that share on that date; or

(B) In the case of nonrecently purchased FT stock treated as carryover FT stock, a gain recognition election under section 338(b)(3)(A) applied to that share. For purposes of the preceding sentence, a shareholder that is a controlled foreign corporation is considered to be a United States person, and the principle of section 1248(c)(2)(D)(ii) (concerning a United States person's indirect ownership of stock in a foreign corporation) applies in determining the correct holding period.

(iv) *Post-acquisition date distribution of old FT earnings and profits.* A post-acquisition date distribution with respect to a share of carryover FT stock is considered to be derived first from earnings and profits derived after FT's acquisition date and then from earnings and profits derived on or before FT's acquisition date.

(v) *Old FT earnings and profits unaffected by post-acquisition date deficits.* The carryover amount for a share of carryover FT stock is not reduced by deficits in earnings and profits incurred by new FT. This rule applies for purposes of determining the amount of foreign taxes deemed paid regardless of the fact that there are no accumulated earnings and profits. For example, a distribution by new FT with respect to a share of carryover FT stock is treated as a dividend by the distributee to the extent of the carryover amount for that share notwithstanding that new FT has no earnings and profits.

(vi) *Character of FT stock as carryover FT stock eliminated upon disposition.* A share of FT stock is not considered carryover FT stock after it is disposed of provided that all gain realized on the transfer is recognized at the time of the transfer, or that, if less than all of the realized gain is recognized, the recognized amount equals or exceeds the remaining carryover amount for that share.

(4) *Passive foreign investment company stock.* Stock that is owned as of the beginning of the day after FT's acquisition date by a person other than a purchasing corporation, or by a purchasing corporation if the FT stock is nonrecently purchased stock not subject to a gain recognition election under § 1.338(b)–1(e)(2), is treated as passive foreign investment company stock to the extent provided in section 1297(b)(1).

(c) *Dividend treatment under section 1248(e).* The principles of this paragraph (b) apply to shareholders of a domestic corporation subject to section 1248(e).

(d) *Allocation of foreign taxes.* If a section 338 election is made for target (whether foreign or domestic), and target's taxable year under foreign law (if any) does not close at the end of the

acquisition date, foreign income taxes attributable to the foreign taxable income earned by target during such foreign taxable year are allocated to old target and new target. Such allocation is made under the principles of § 1.1502–76(b).

(e) *Operation of section 338(h)(16).* [Reserved]

(f) *Examples.* (1) Except as otherwise provided, all corporations use the calendar year as the taxable year, have no earnings and profits (or deficit) accumulated for any taxable year, and have only one class of outstanding stock.

(2) This section may be illustrated by the following examples:

Example 1. Gain recognition election for carryover FT stock.(a) A has owned 90 of the 100 shares of CFCT stock since CFCT was organized on March 13, 1989. P has owned the remaining 10 shares of CFCT stock since CFCT was organized. Those 10 shares constitute nonrecently purchased stock in P's hands within the meaning of section 338(b)(6)(B). On November 1, 1994, P purchases A's 90 shares of CFCT stock for $90,000 and makes a section 338 election for CFCT. P also makes a gain recognition election under section 338(b)(3)(A) and § 1.338(b)–1(e)(2).

(b) CFCT's earnings and profits for its short taxable year ending on November 1, 1994, are $50,000, determined without taking into account the deemed asset sale. Assume A recognizes gain of $81,000 on the sale of the CFCT stock. Further, assume that CFCT recognizes gain of $40,000 by reason of its deemed sale of assets under section 338(a)(1).

(c) A's sale of CFCT stock to P is a transfer to which section 1248 and paragraphs (b)(1) and (2) of this section apply. For purposes of applying section 1248(a) to A, the earnings and profits of CFCT for its short taxable year ending on November 1, 1994, are $90,000 (the earnings and profits for that taxable year as determined under § 1.1248–2(e) ($50,000) plus earnings from the deemed sale ($40,000)). Thus, A's entire gain is characterized as a dividend under section 1248 (but see section 338(h)(16)).

(d) Assume that P recognizes a gain of $9,000 with respect to the 10 shares of nonrecently purchased CFCT stock by reason of the gain recognition election. Because P is treated as selling the nonrecently purchased stock for all purposes of the Internal Revenue Code, section 1248 applies. Thus, under § 1.1248–2(e), $9,000 of the $90,000 of earnings and profits for 1994 are attributable to the block of 10 shares of CFCT stock deemed sold by P at the close of November 1, 1994 ($90,000 × 10/100). Accordingly, P's entire gain on the deemed sale of 10 shares of CFCT stock is included under section 1248(a) in P's gross income as a dividend (but see section 338(h)(16)).

Example 2. No gain recognition election for carryover FT stock.(a) Assume the same facts as in *Example 1,* except that P does not make a gain recognition election.

(b) The 10 shares of nonrecently purchased CFCT stock held by P is carryover FT stock under paragraph (b)(3) of this section. Accordingly, the earnings and profits (and attributable foreign taxes) of old CFCT carry over to new CFCT solely for purposes of that block of 10 shares. The amount of old CFCT's earnings and profits taken into account with respect to that block in the event, for example, of a distribution by new CFCT with respect to that block is the amount of the section 1248 dividend that P would have recognized with respect to that block had it made a gain recognition election under section 338(b)(3)(A). Under the facts of *Example 1,* P would have recognized a gain of $9,000 with respect to that block, all of which would have been a section 1248 dividend ($90,000 × 10/100). Accordingly, the carryover amount for the block of 10 shares of nonrecently purchased CFCT stock is $9,000.

Example 3. Sale of controlled foreign corporation stock prior to and on the acquisition date.(a) X and Y, both U.S. corporations, have each owned 50% of the CFCT stock since 1986. Among CFCT's assets are assets the sale of which would generate subpart F income. On December 31, 1994, X sells its CFCT stock to P. On June 30, 1995, Y sells its CFCT stock to P. P makes a section 338 election for CFCT. In both 1994 and 1995, CFCT has subpart F income resulting from operations.

(b) For taxable year 1994, X and Y are United States shareholders on the last day of CFCT's taxable year, so pursuant to section 951(a)(1)(A) each must include in income its pro rata share of CFCT's subpart F income for 1994. Because P's holding period in the CFCT stock acquired from X does not begin until January 1, 1995, P is not a United States shareholder on the last day of 1994 for purposes of section 951(a)(1)(A) (see § 1.951–1(f)). X must then determine the extent to which section 1248 recharacterizes its gain on the sale of CFCT stock as a dividend.

(c) For the short taxable year ending June 30, 1995, Y is considered to own the CFCT stock sold to P at the close of CFCT's acquisition date. Because the acquisition date is the last day of CFCT's taxable year, Y and P are United States shareholders on the last day of CFCT's taxable year. Pursuant to section 951(a)(1)(A), each must include its pro rata share of CFCT's subpart F income for the short taxable year ending June 30, 1995. This includes any income generated on the deemed sale of CFCT's assets. Y must then determine the extent to which section 1248 recharacterizes its gain on the sale of the

CFCT stock as a dividend, taking into account any increase in CFCT's earnings and profits due to the deemed sale of assets.

Example 4. Acquisition of control for purposes of section 951 prior to the acquisition date. FS owns 100% of the FT stock. On July 1, 1994, P buys 60% of the FT stock. On December 31, 1994, P buys the remaining 40% of the FT stock and makes a section 338 election for FT. For tax year 1994, FT has earnings and profits of $1,000 (including earnings resulting from the deemed sale). The section 338 election results in $500 of subpart F income. As a result of the section 338 election, P must include in gross income the following amount under section 951(a)(1)(A) (see §1.951–(b)(2)):

FT's subpart F income for 1994	$500.00
Less: reduction under section 951(a)(2)(A) for period (1–1–94 through 7–1–94) during which FT is not a controlled foreign corporation ($500×182/365)	249.32
Subpart F income as limited by section 951 (a)(2)(A)	250.68
P's pro rata share of subpart F income as determined under section 951(a)(2)(A) (60%×250.68)	150.41

Example 5. Coordination with section 936.(a) T is a corporation for which a section 936 election has been made. P makes a qualified stock purchase of T and makes a section 338 election for T.

(b) T's deemed sale of assets under section 338 constitutes a sale for purposes of subtitle A of the Internal Revenue Code, including section 936(a)(1)(A)(ii). To the extent that the assets deemed sold are used in the conduct of an active trade or business in a possession for purposes of section 936(a)(1)(A)(i), and assuming all the other conditions of section 936 are satisfied, the income from the deemed sale qualifies for the credit granted by section 936(a). The source of income from the deemed sale is determined as if the assets had actually been sold and is not affected for purposes of section 936 by section 338(h)(16).

(c) Because new T is treated a new corporation for purposes of subtitle A of the Internal Revenue Code, the three year testing period in section 936(a)(2)(A) begins again for new T on the day following T's acquisition date. Thus, if the character or source of old T's gross income disqualified it for the credit under section 936, a fresh start is allowed by a section 338 election.

[T.D. 8515, 59 FR 2978, Jan. 20, 1994]

§1.338(b)–1 Adjusted grossed-up basis.

(a) *Scope.* This section provides rules under section 338(b) to determine the adjusted grossed-up basis (AGUB) for target. The AGUB is the amount for which new target is deemed to have purchased all of its assets in the deemed purchase under section 338(a)(2). The AGUB is allocated among target's assets in accordance with §1.338(b)–2T to determine the price at which the assets are deemed to have been purchased. Subsequent adjustments to AGUB and the allocation of such adjustments to target's assets may be made under §1.338(b)–3T.

(b) *Adjustment events.* Adjustment events are increases (or decreases) in the consideration paid for recently or nonrecently purchased stock, reductions in target's liabilities included in AGUB as of the beginning of the day after the acquisition date, and old target liabilities that become fixed and determinable.

(c) *AGUB*—(1) *In general.* AGUB is the sum of—

(i) The grossed-up basis in the purchasing corporation's recently purchased target stock;

(ii) The purchasing corporation's basis in nonrecently purchased target stock;

(iii) The liabilities of new target; and

(iv) Other relevant items.

(2) *Time when AGUB determined.* AGUB is initially determined at the beginning of the day after the acquisition date of target. However, adjustment events that occur during new target's first taxable year are taken into account for purposes of determining AGUB and the basis of target's assets as if they had occurred at the beginning of the day after the acquisition date.

(d) *Grossed-up basis of recently purchased stock*—(1) *General rule.* The purchasing corporation's grossed-up basis of recently purchased target stock is the product of—

(i) The purchasing corporation's basis in recently purchased target stock (as defined in section 338(b)(6)(A)) at the beginning of the day after the acquisition date; multiplied by

(ii) A fraction the numerator of which is 100 percent minus the percentage of target stock (by value) attributable to the purchasing corporation's nonrecently purchased target stock and the denominator of which is the percentage of target stock (by value)

attributable to the purchasing corporation's recently purchased target stock. See section 338(b)(4).

(2) *Application.* If target has a single class of outstanding stock, the grossed-up basis in the purchasing corporation's recently purchased target stock reflects the total price the purchasing corporation would have paid for all outstanding target stock (other than the purchasing corporation's nonrecently purchased target stock, as defined in section 338(b)(6)(B)) had the purchasing corporation purchased all such stock (other than the nonrecently purchased target stock) for a price per share equal to the average price per share that the purchasing corporation paid for the recently purchased target stock.

(e) *Basis of nonrecently purchased stock*—(1) *In general.* In the absence of an election under section 338(b)(3) (gain recognition election), the purchasing corporation retains its basis in the nonrecently purchased stock. A gain recognition election applies to nonrecently purchased stock of target (or a target affiliate) only if a section 338 election is made for target (or the target affiliate).

(2) *Effect of gain recognition election*—(i) *In general.* If the purchasing corporation makes a gain recognition election, for all purposes of the Internal Revenue Code—

(A) The purchasing corporation is treated as if it sold on the acquisition date the nonrecently purchased target stock for the basis amount determined under paragraph (e)(2)(ii) of this section; and

(B) The purchasing corporation's basis on the acquisition date in nonrecently purchased target stock is the basis amount.

(ii) *Basis amount.* The basis amount is equal to the purchasing corporation's grossed-up basis in recently purchased target stock multiplied by a fraction the numerator of which is the percentage of target stock (by value) attributable to the purchasing corporation's nonrecently purchased target stock and the denominator of which is 100 percent minus the numerator amount. Thus, if target has a single class of outstanding stock, the purchasing corporation's basis in each share of nonrecently purchased target stock after the gain recognition election is equal to the average price per share of the purchasing corporation's recently purchased target stock.

(iii) *Losses not recognized.* Only gains (unreduced by losses) on the nonrecently purchased target stock are recognized.

(iv) *Stock subject to election.* The gain recognition election applies to—

(A) All nonrecently purchased target stock; and

(B) Any nonrecently purchased stock in a target affiliate having the same acquisition date as target if such target affiliate stock is held by the purchasing corporation on such date.

(3) *Procedure for making gain recognition election*—(i) *In general.* The gain recognition election is made by attaching a gain recognition statement to a timely filed Form 8023 for target. The gain recognition statement must contain the information specified in the form and its instructions. The gain recognition election is irrevocable.

(ii) *Section 338(h)(10) election.* If a section 338(h)(10) election is made for target, the purchasing corporation is deemed to have made a gain recognition election.

(4) *Comparison with ADSP formula.* Whenever the purchasing corporation holds nonrecently purchased target stock at a basis that differs from the purchasing corporation's basis in recently purchased target stock, the grossed-up basis in the purchasing corporation's recently purchased target stock as calculated for purposes of the AGUB differs from the grossed-up basis of the purchasing corporation's recently purchased target stock as calculated in the ADSP formula. The ADSP formula treats the purchasing corporation's nonrecently purchased target stock in the same manner as target stock not held by the purchasing corporation. If a gain recognition election is made, the sum of the grossed-up basis in the purchasing corporation's recently purchased target stock and the purchasing corporation's basis in nonrecently purchased target stock equals the grossed-up basis of the purchasing corporation's recently purchased target stock as calculated in the ADSP formula.

(f) *Liabilities of new target*—(1) *In general.* The liabilities of new target are its liabilities (and the liabilities to which target's assets are subject) as of the beginning of the day after the acquisition date (other than liabilities that were neither liabilities of old target nor liabilities to which old target's assets were subject). The amount of the liabilities of new target taken into account to determine AGUB is determined as if new target had acquired old target's assets from an unrelated person and, as part of the transaction, had assumed or taken property subject to the liabilities.

(2) *Excluded obligations*—(i) *In general.* In order to be included in AGUB at the beginning of the day after the acquisition date, an obligation must be a bona fide liability of target as of that date which is properly includible in basis under principles of tax law that would apply if new target had acquired old target's assets from an unrelated person and, as part of the transaction, had assumed or taken property subject to the obligation. For example, if, as of the beginning of the day after the acquisition date, the amount of a contingent or speculative obligation of target is not properly includible in basis under the preceding sentence, the obligation is not initially included in AGUB.

(ii) *Time when excluded obligations taken into account.* Obligations that, under this paragraph (f)(2), are initially excluded from AGUB are taken into account in redetermining AGUB and the basis of target's assets under principles of tax law that would apply if new target had acquired old target's assets directly from an unrelated person and, as part of the transaction, had assumed or taken property subject to those obligations. For the application of these principles of tax law to certain contingent liabilities that are initially excluded from AGUB under this paragraph (f)(2), see § 1.338(b)–3T.

(3) *Liabilities taken into account in determining amount realized on subsequent disposition.* In determining the amount realized on a subsequent sale or other disposition of property deemed purchased by new target, the entire amount of any liability included in AGUB is considered to be an amount taken into account in determining new target's basis in property which secures the liability for purposes of applying § 1.1001–2(a). Thus, if a liability is included in AGUB, § 1.1001–2(a)(3) does not prevent the amount of such liability from being treated as discharged within the meaning of § 1.1001–2(a)(4) as a result of new target's sale or disposition of the property which secures such liability.

(g) *Other relevant items*—(1) *In general.* AGUB may be increased (or decreased) for *other relevant items.* For this purpose, other relevant items may only arise from adjustment events that occur after the close of new target's first taxable year and adjustments under paragraph (g)(3) of this section. See § 1.338(b)–3T (relating to the treatment of certain subsequent adjustments to AGUB). Unlike in the determination of ADSP or MADSP, other relevant items do not include reductions for acquisition costs incurred by the purchasing corporation in connection with the qualified stock purchase that are capitalized in the basis of recently purchased target stock.

(2) *Flow-through of relevant item adjustment to target subsidiary.* If the amount of AGUB of target (T) allocated to the stock of a target affiliate (T1) is subsequently increased (or decreased) by reason of an other relevant item under this paragraph (g), the grossed-up basis of the T1 stock (and, if a section 338 election is made for T1, T1's AGUB) is also increased (or decreased) as if the increase (or decrease) in the basis of the stock was an adjustment to the purchase price deemed paid by T for such stock. The resulting increase (or decrease) in AGUB of T1 is allocated among T1's assets in accordance with §§ 1.338(b)–2T and 1.338(b)–3T.

(3) *Adjustments by the Internal Revenue Service.* In connection with the examination of a return, the District Director may increase (or decrease) AGUB for items other than those described in paragraphs (g)(1) and (2) of this section under the authority of section 338(b)(2) and allocate such amounts to target's assets under the authority of section 338(b)(5) so that AGUB and the basis of target's assets properly reflect the cost to the purchasing corporation of its interest in

target's assets. Such items may include distributions from target to the purchasing corporation, capital contributions from the purchasing corporation to target during the 12-month acquisition period, or acquisitions of target stock by purchasing corporation after the acquisition date from minority shareholders.

(h) *Examples.* (1) For purposes of the examples in this paragraph (h), T has no liabilities other than a tax liability resulting from the deemed sale of assets.

(2) This section may be illustrated by the following examples:

Example 1. (a) Before July 1 of Year 1, P purchases 10 of the 100 shares of T stock for $5,000. On July 1 of Year 2, P purchases 80 shares of T stock for $60,000 and makes a section 338 election for T. As of July 1 of Year 2, T's only asset is raw land with an adjusted basis to T of $50,400 and a fair market value of $100,000. T has no loss or tax credit carryovers to Year 2. T's marginal tax rate for any ordinary income or net capital gain resulting from the deemed sale of assets is 34%. The 10 shares purchased before July 1 of Year 1 constitute nonrecently purchased T stock with respect to P's qualified stock purchase of T stock on July 1 of Year 2.

(b) The ADSP formula as applied to these facts is the same as in *Example 2* of § 1.338–3(d)(9). Accordingly, the ADSP of T is $87,672.72. The existence of nonrecently purchased T stock is irrelevant for purposes of the ADSP formula, because that formula treats P's nonrecently purchased T stock in the same manner as T stock not held by P.

(c) The total tax liability resulting from T's deemed sale of assets, as calculated under the ADSP formula, is $12,672.72.

(d) If P does not make a gain recognition election, the AGUB of new T's assets is $85,172.72, determined as follows. (In the formula below, GRP is the grossed-up basis in P's recently purchased T stock, BNP is P's basis in nonrecently purchased T stock, L is T's liabilities, and X is other relevant items.)

AGUB=GRP+BNP+L+X
AGUB=$60,000×[(1−.1)/.8]+$5,000+$12,672.72+0
AGUB=$85,172.72

(e) If P makes a gain recognition election, the AGUB of new T's assets is $87,672.72, determined as follows:

AGUB=$60,000×[(1−.1)/.8]+$60,000×[(1−.1)/.8]×[.1/(1−.1)]+$12,672.72
AGUB=$87,672.72

(f) The calculation of AGUB if P makes a gain recognition election may be simplified as follows:

AGUB=$60,000/.8+$12,672.72
AGUB=$87,672.72

(g) As a result of the gain recognition election, P's basis in its nonrecently purchased T stock is increased from $5,000 to $7,500 (i.e., $60,000×[(1−.1)/.8]×[.1/(1−.1)]). Thus, P recognizes a gain in Year 2 with respect to its nonrecently purchased T stock of $2,500 (*i.e.*, $7,500−$5,000).

Example 2. On January 1 of Year 1, P purchases one-third of the T stock. On March 1 of Year 1, T distributes a dividend to all of its shareholders. On April 15 of Year 1, P purchases the remaining T stock and makes a section 338 election for T. In appropriate circumstances, the District Director may decrease the AGUB of T to take into account the payment of the dividend and properly reflect the fair market value of T's assets deemed purchased.

Example 3. (a) T's sole asset is a building worth $100,000. On August 1 of Year 1, P purchases 10 of the 100 shares of T stock for $8,000. On June 1 of Year 2, P purchases 50 shares of T stock for $50,000. On June 15 of Year 2, P contributes a tract of land to the capital of T and receives 10 additional shares of T stock as a result of the contribution. Both the basis and fair market value of the land at that time are $10,800. On June 30 of Year 2, P purchases the remaining 40 shares of T stock for $40,000 and makes a section 338 election for T. The AGUB of T is $108,800.

(b) To prevent the shifting of basis from the contributed property to other assets of T, the District Director may allocate $10,800 of the AGUB to the land, leaving $98,000 to be allocated to the building.

[T.D. 8515, 59 FR 2979, Jan. 20, 1994]

§ 1.338(b)–2T Allocation of adjusted grossed-up basis among target assets (temporary).

(a) *Introduction*—(1) *In general.* This section prescribes rules under section 338(b)(5) for allocating adjusted grossed-up basis among the assets of a target for which a section 338 election is made.

(2) *Fair market value.* The *fair market value* of an asset is the gross fair market value of that asset (*i.e.*, fair market value determined without regard to mortgages, liens, pledges, or other liabilities).

(b) *General rule for allocating adjusted grossed-up basis*—(1) *Cash and other items designated by the Internal Revenue Service.* Adjusted grossed-up basis is first reduced by the amount of Class I assets. Class I assets are cash, demand deposits and similar accounts in banks, savings and loan associations (and other similar depository institutions),

and other items designated in the Internal Revenue Bulletin by the Internal Revenue Service.

(2) *Other assets*—(i) *In general.* Subject to the limitations and other special rules of paragraph (c) of this section, adjusted grossed-up basis (as reduced by Class I assets) is allocated among Class II assets of target held at the beginning of the day after the acquisition date in proportion to their fair market values at such time, then among Class III assets so held in such proportion, then among Class IV assets so held in such proportion, and finally to Class V assets.

(ii) *Class II assets.* Class II assets are certificates of deposit, U.S. Government securities, readily marketable stock or securities (within the meaning of §1.351–1(c)(3)), foreign currency, and other items designated in the Internal Revenue Bulletin by the Internal Revenue Service.

(iii) *Class III assets.* Class III assets are all assets of target other than Class I, II, IV, and V assets.

(iv) *Class IV assets.* Class IV assets are all section 197 intangibles, as defined in section 197, except those in the nature of goodwill and going concern value.

(v) *Class V assets.* Class V assets are section 197 intangibles in the nature of goodwill and going concern value.

(c) *Certain limitations and special rules for basis allocable to an asset*—(1) *Basis not to exceed fair market value.* The amount of adjusted grossed-up basis allocated to an asset (other than Class V assets) shall not exceed the fair market value of that asset at the beginning of the day after the acquisition date. For modification of this fair market value limitation with respect to certain contingent income assets, see §1.338(b)–3T(g).

(2) *Assets subject to other limitations.* The amount of adjusted grossed-up basis allocated to an asset shall be subject to the limitations under the provisions of the Internal Revenue Code or principles of tax law in the same manner as if such asset were acquired from an unrelated person in a sale or exchange. For example, if the deemed sale (and purchase) of assets is a transaction described in section 1056(a) (relating to basis limitation for player contracts transferred in connection with the sale of a franchise), the amount of adjusted grossed-up basis allocated to a contract for the services of an athlete shall not exceed the limitation imposed by that section. For another example, see §1.338(b)–1(f)(2), relating to excluded obligations.

(3) *Special rule for allocating adjusted grossed-up basis when purchasing corporation has nonrecently purchased stock*—(i) *Scope.* This paragraph (c)(3) applies if at the beginning of the day after the acquisition date (A) the purchasing corporation holds nonrecently purchased stock for which a gain recognition election under section 338(b)(3) and §1.338(b)–1(e)(2) is not made and (B) the hypothetical purchase price determined under paragraph (c)(3)(ii) of this section exceeds the adjusted grossed-up basis determined under §1.338(b)–1(c)(1). The determinations required under the preceding sentence shall be made without regard to adjustment events occurring after the close of new target's first taxable year.

(ii) *Determination of hypothetical purchase price.* Hypothetical purchase price is the sum of the grossed-up basis of recently purchased stock as determined under §1.338–3(d)(2) and liabilities of target.

(iii) *Allocation of adjusted grossed-up basis.* Subject to the limitations in paragraphs (c)(1) and (2) of this section, adjusted grossed-up basis (after reduction by the amount of Class I assets) is allocated among Class II, III, IV, and V assets of target held at the beginning of the day after the acquisition date in proportion to their fair market values at such time. For this purpose, the fair market value of Class V assets is deemed to be the excess, if any, of the hypothetical purchase price over the sum of the amount of the Class I assets and the fair market values of the Class II, III, and IV assets.

(4) *Effective dates.* This section applies for acquisition dates on or after February 14, 1997. For acquisition dates before February 14, 1997, if section 197 does not apply to any asset deemed acquired, the provisions of the regulations in effect before February 14, 1997, apply (see §1.338(b)–2T as contained in 26 CFR part 1 revised April 1, 1996). For acquisition dates before February 14,

1997, if section 197 applies to any asset deemed acquired, the taxpayer (and all related parties) may consistently (in all transactions in which AGUB, ADSP, MADSP, or consideration must be allocated under section 338 or 1060)—

(i) Apply the provisions of this section;

(ii) Apply the provisions of this section as in effect before February 14, 1997 (see § 1.338(b)–2T as contained in 26 CFR part 1 revised April 1, 1996); or

(iii) Apply the provisions of this section as in effect before February 14, 1997 (see § 1.338(b)–2T as contained in 26 CFR part 1 revised April 1, 1996), but treat all amortizable section 197 intangibles as Class IV assets.

(d) *Examples.* The provisions of this section and § 1.338(b)–1 may be illustrated by the following examples:

Example (1). (i) T owns 90% of the outstanding T1 stock. P purchases 100% of the outstanding T stock for $2,000. A section 338 election is made for T and, as a result, T1 is considered acquired in a qualified stock purchase. A section 338 election is made for T1. The grossed-up basis of the T stock is $2,000 (i.e., $2,000 × 1/1).

(ii) Assume that the liabilities of T as of the beginning of the day after the acquisition date (including income tax liabilities arising on the deemed sale of its assets) are as follows:

Liabilities (nonrecourse mortgage plus unsecured liabilities)	$700
Taxes payable	300
Total	1,000

(iii) The adjusted grossed-up basis (''AGUB'') of T is determined as follows:

Grossed-up basis	$2,000
Total liabilities	1,000
AGUB	3,000

(iv) Assume that, at the beginning of the day after the acquisition date, T's cash and the fair market values of T's Class II and III assets are as follows:

Asset class	Asset	Fair market value
I	Cash	*$200
II	Portfolio of marketable securities	300
III	Inventory	300
III	Accounts receivable	600
III	Building	800
III	Land	200
III	Investment in TI	450
	Total	2,850

*Amount.

(v) Under paragraph (b)(2) of this section the amount of AGUB allocable to T's Class II and III assets is reduced by the amount of cash to $2,800, *i.e.*, $3,000 − $200. $300 of AGUB is then allocated to marketable securities. Since the remaining amount of AGUB is $2,500 (*i.e.*, $3,000 − ($200 + $300)), an amount which exceeds the sum of the fair market values of T's Class III assets, the amount allocated to each Class III asset is its fair market value:

Inventory	$300
Accounts receivable	600
Building	800
Land	200
Investment in T1	450
Total	2,350

(vi) T has no Class IV assets. The amount allocated to T's Class V assets (assets in the nature of goodwill and going concern value) is $150, i.e., $2,500–$2,350.

(vii) The grossed-up basis of the T1 stock is $500, *i.e.*, $450×1/.9.

(viii) Assume that the liabilities of T1 as of the beginning of the day after the acquisition date (including income tax liabilities arising on the deemed sale of its assets) are as follows:

General liabilities	$100
Taxes payable	20
Total	120

(ix) The AGUB of T1 is determined as follows:

Grossed-up basis of T1 stock	$500
Liabilities	120
AGUB	620

(x) Assume that at the beginning of the day after the acquisition date, T1's cash and the fair market values of its Class III and IV assets are as follows:

Asset class	Asset	Fair market value
I	Cash	$50*
III	Equipment	200
IV	Patent	350
	Total	$600

*Amount

(xi) The amount of AGUB allocable to T1's Class III and IV assets is first reduced by the $50 of cash.

(xii) Since the remaining amount of AGUB ($570) is an amount which exceeds the fair market value of T1's only Class III asset, the equipment, the amount allocated to the equipment is its fair market value ($200). After that, the remaining amount of AGUB ($370) exceeds the fair market value of T1's only Class IV asset, the patent. Thus, the amount allocated to the patent is its fair market value ($350).

(xiii) The amount allocated to T1's Class V assets (assets in the nature of goodwill and going concern value) is $20, i.e., $570 − $550.

Example (2). (i) Assume that the facts are the same as in *Example (1)* except that P has, for five years, owned 20% of T's stock, which has a basis in P's hands at the beginning of the day after the acquisition date of $100, and P purchases the remaining 80% of T's stock for $1,600. P does not make a gain recognition election under section 338(b)(3).

(ii) Under §1.338(b)-1(d), the grossed-up basis of recently purchased T stock is $1,600, *i.e.*, $1,600×(1 − .2)/.8.

(iii) The AGUB of T is determined as follows:

Grossed-up basis of recently purchased stock	$1,600
Basis of nonrecently purchased stock	100
Liabilities	1,000
AGUB	2,700

(iv) Since P holds nonrecently purchased stock, the hypothetical purchase price of the T stock must be computed and is determined as follows:

Grossed-up basis of recently purchased stock as determined under §1.338–3(d)(2) ($1,600/.8)	$2,000
Liabilities	1,000
Total	3,000

(v) Since the hypothetical purchase price ($3,000) exceeds the AGUB (and no gain recognition election is made under section 338(b)(3)), AGUB is allocated under paragraph (c)(3) of this section.

(vi) The amount of AGUB ($2,700) available to allocate to T's assets is reduced by the amount of cash to $2,500, i.e., $2,700 − $200. This $2,500 balance is then allocated among the Class II, III, IV, and V assets in proportion to, and not in excess of, their fair market values (as determined under §1.338(b)–2T(c)(3)(iii)).

(vii) Under paragraph (c)(3) of this section, the fair market value of the Class V assets is deemed to be $150, i.e., the $3,000 hypothetical purchase price minus $2,850 (the sum of T's cash, $200, and the fair market value of its Class II, III, and IV assets, $2,650). The allocation is as follows:

Portfolio of marketable securities	*$268
Inventory	268
Accounts receivable	536
Building	714
Land	178
Investment in T1	402
Goodwill and going concern value	134
Total	$2,500

*All numbers rounded for convenience.

(viii) If the AGUB of T is increased (or decreased) as a result of a subsequent adjustment, the hypothetical purchase price and the deemed fair market value of the Class V assets shall be redetermined and the increase (or decrease) in AGUB shall be allocated among T's acquisition date assets pursuant to §1.338(b)–3T(f). The increase (or decrease) in AGUB is allocated pursuant to §1.338(b)–3T(f) even if the hypothetical purchase price, as redetermined, no longer exceeds AGUB, as redetermined.

[T.D. 8072, 51 FR 10624, Mar. 28, 1986 as amended by T.D. 8092, 51 FR 23742, July 1, 1986; 51 FR 33033, Sept. 18, 1986; T.D. 8515, 59 FR 2960, Jan. 20, 1994; T.D. 8515, 59 FR 2981, Jan. 20, 1994; T.D. 8515, 59 FR 2984, Jan. 20, 1994; T.D. 8711, 62 FR 2269, Jan. 16, 1997]

§1.338(b)–3T Subsequent adjustments to adjusted grossed-up basis (temporary).

(a) *Scope*—(1) *In general.* This section provides rules for redetermining adjusted grossed-up basis to account for adjustment events that occur after the close of new target's first taxable year. These adjustments must be made upon the payment of contingent amounts for recently or nonrecently purchased stock, the change in a contingent liability of old target to one which is fixed and determinable, reductions in the amounts paid for recently or nonrecently purchased stock, and reductions in liabilities of target (and the liabilities to which its assets are subject) that were taken into account in determining adjusted grossed-up basis. Adjusted grossed-up basis is redetermined under this section only if such an adjustment would be required, under general principles of tax law, in connection with an actual asset purchase by new target from an unrelated person. This section also provides rules for the allocation of such adjustments subsequent to the close of new target's first taxable year. For the treatment of adjustments prior to the close of new target's first taxable year, see §§1.338(b)–1 and 1.338(b)–2T.

(2) *Exceptions to applicability of section.* This section does not apply to a reduction in indebtedness that is (1) includible in gross income as discharge of indebtedness income (or would be includible but for section 108(a)), (2) due to a contribution to capital, (3) payment of a liability, or (4) the discharge of a liability within the meaning of § 1.1001–2.

(3) *Adjustment of aggregate deemed sale price.* See paragraph (h) of this section for certain rules relating to a change in the aggregate deemed sale price of target's assets.

(b) *Definitions*—(1) *Contingent liability.* A contingent liability is a liability of target at the beginning of the day after the acquisition date that is not fixed and determinable by the close of new target's first taxable year.

(2) *Contingent amount.* The term *contingent amount* means the amount of the consideration to be paid for recently or nonrecently purchased stock that is not fixed or determinable by the close of new target's first taxable year, plus contingent liabilities of target.

(3) *Reduction amount.* The term *reduction amount* means a reduction after the close of new target's first taxable year in either—

(i) The consideration paid for recently or nonrecently purchased stock; or

(ii) A liability of target (or a liability to which one or more of its assets are subject) that has been taken into account in determining AGUB.

(4) *Acquisition date asset.* The term *acquisition date asset* means any asset held by new target at the beginning of the day after the acquisition date (other than Class I assets).

(c) *General rule*—(1) *Time when increases in adjusted gross-up basis taken into account.* A contingent amount that is taken into account for purposes of calculating adjusted grossed-up basis and the bases of assets of target is taken into account at the time at which such amount becomes fixed and determinable.

(2) *Time when decreases in adjusted grossed-up basis taken into account.* A reduction amount is taken into account for purposes of calculating adjusted grossed-up basis and the bases of assets of target when the reduction in the consideration paid or the reduction of the liability occurs.

(3) *Amount of increases and decreases in adjusted grossed-up basis.* The amount of an increase (or decrease) in adjusted grossed-up basis described in paragraph (c)(1) or (2) of this section is the difference between (i) adjusted grossed-up basis immediately before the increase (or decrease) and (ii) adjusted grossed-up basis recomputed by taking into account the increase (or decrease). For example, if an additional amount is paid for recently purchased stock of target, grossed-up basis of recently purchased stock and adjusted grossed-up basis are recomputed by applying the fraction in section 338(b)(4) to the basis of the recently purchased stock at the beginning of the day after the acquisition date, adjusted for additional amounts paid. Any other adjustments required by a change in grossed-up basis would also be taken into account in making the recomputation, such as a change in the basis of nonrecently purchased stock under section 338(b)(3) and, if there has not been a section 338(h)(10) election, any additional income tax liabilities of target resulting from the additional payment.

(d) *Allocation of increases in adjusted grossed-up basis*—(1) *In general.* An increase in adjusted grossed-up basis (as determined under paragraph (c)(3) of this section) is allocated among target's acquisition date assets under § 1.338(b)–2T. Amounts allocable to an acquisition date asset (or with respect to a disposed-of acquisition date asset) are subject to the fair market value limitation and other limitations in § 1.338(b)–2T(c)(1) and (2). Except as provided in paragraph (g) of this section, for the purpose of applying § 1.338(b)–2T(c)(1) and (2), the fair market value is determined at the beginning of the day after the acquisition date. If adjusted grossed-up basis was allocated among target's assets pursuant to § 1.338(b)–2T(c)(3), an increase in adjusted grossed-up basis (as determined under paragraph (c)(3) of this section) is accounted for in accordance with the rules of paragraph (f) of this section.

(2) *Effect of disposition or depreciation of acquisition date assets.* If an acquisition date asset has been disposed of, depreciated, amortized or depleted by

new target before a contingent amount is taken into account in redetermining adjusted grossed-up basis, the contingent amount otherwise allocable to such asset is treated under principles of tax law applicable when part of the cost of an asset (not previously reflected in its basis) is paid after the asset has been disposed of, depreciated, amortized or depleted.

(e) *Allocation of decreases in adjusted grossed-up basis*—(1) *In general*. If adjusted grossed-up basis was allocated in accordance with the rules of § 1.338(b)–2T(b)(2), a decrease in adjusted grossed-up basis (as determined under paragraph (c)(3) of this section) is allocated in the following order: first, as a reduction in the bases of target's Class V acquisition date assets, second, as a reduction of the bases of target's Class IV acquisition date assets in proportion to their fair market values at the beginning of the day after the acquisition date, third, as a reduction of the bases of target's Class III acquisition date assets in proportion to their fair market values at the beginning of the day after the acquisition date, and finally, as a reduction of the bases of target's Class II acquisition date assets in proportion to their fair market values at the beginning of the day after the acquisition date. The decrease in adjusted grossed-up basis allocated to an asset shall not exceed the adjusted grossed-up basis of target previously allocated to that asset. If adjusted grossed-up basis was allocated among target's assets pursuant to § 1.338(b)–2T(c)(3), a decrease in adjusted grossed-up basis (as determined under paragraph (c)(3) of this section) is accounted for in accordance with the rules of paragraph (f) of this section.

(2) *Effect of disposition of assets or reduction of basis below zero*. If an acquisition date asset has been disposed of, depreciated, amortized, or depleted by new target before a reduction amount is taken into account in adjusted grossed-up basis, the decrease in adjusted grossed-up basis attributable to such reduction amount otherwise allocable to such asset is treated under principles of tax law applicable when the cost of an asset (previously reflected in its basis) is reduced after the asset has been disposed of or depreciated, amortized, or depleted. For purposes of this subparagraph (2), an asset is considered to have been disposed of to the extent that its allocable portion of the decrease in adjusted grossed-up basis would reduce its basis below zero.

(3) *Section 38 property*. Section 1.47–2(c) applies to a reduction in basis of section 38 property under this section.

(f) *Special rule for allocation of increases (or decreases) in adjusted grossed-up basis when hypothetical purchase price was used in allocating adjusted grossed-up basis*—(1) *Scope*. This paragraph (f) applies if adjusted grossed-up basis was allocated among new target's Class II, III, IV, and V assets in accordance with § 1.338(b)–2T(c)(3) and an adjustment event occurs after the close of the new target's first taxable year.

(2) *Allocation of increases (decreases) in adjusted grossed-up basis*. If an adjustment event after the close of new target's first taxable year increases (or decreases) adjusted grossed-up basis, the following items shall be redetermined, taking into account such adjustment event: the hypothetical purchase price, the deemed fair market value of Class V assets, and the adjusted grossed-up basis allocable to each acquisition date asset under § 1.338(b)–2T(c)(3) (the redetermined (c)(3) amount). (The redetermination of the deemed fair market value of Class V assets under this paragraph (f)(2) is made by taking into account the target's Class I assets and the fair market values of its Class II, III, and IV assets at the beginning of the day after the acquisition date.) If the redetermined (c)(3) amount for an acquisition date asset exceeds the amount of adjusted grossed-up basis previously allocated to such asset (taking into account prior adjustments under this paragraph (f)), an amount of adjusted grossed-up basis equal to such excess shall be allocated to such asset. If the amount of the adjusted grossed-up basis previously allocated to an acquisition date asset (taking into account prior adjustments under this paragraph (f)) exceeds the redetermined (c)(3) amount for that asset, an amount equal to such excess shall be allocated as a reduction in the basis of such asset. The rules of paragraph (d)(2) of this section (or paragraph (e)(2) of this section) apply for the

treatment of amounts allocable under this paragraph (f) to an acquisition date asset that has been disposed of, depreciated, amortized, or depleted.

(3) *Allocation to contingent income assets.* For modification of this rule with respect to certain assets, see paragraph (g) of this section.

(g) *Special rule for allocation of increases (or decreases) in adjusted grossed-up basis to specific assets*—(1) *Patents and similar property*—(i) *Scope.* The rules of this paragraph (g)(1) apply for purposes of allocating an increase (or decrease) in adjusted grossed-up basis to the extent (A) the contingency that results in the increase (or decrease) directly relates to income produced by a particular intangible asset (''contingent income asset''), such as a patent, a secret process, or a copyright, and (B) the increase (or decrease) is related to such contingent income asset and not to other target assets. Adjusted grossed-up basis, as determined under § 1.338(b)–1 at the beginning of the day after the acquisition date, and any increase (or decrease) to adjusted grossed-up basis to which this paragraph (g) does not apply, are allocated among target's acquisition date assets (including contingent income assets) in accordance with the provisions of § 1.338(b)–2T and paragraph (d), (e), or (f) of this section.

(ii) *Specific allocation.* Subject to the fair market value limitation and other limitations in § 1.338(b)–2T(c)(1) and (2), any increase (or decrease) to adjusted grossed-up basis to which this paragraph (f) applies is allocated (A) first, specifically to the contingent income asset to which the increase (or decrease) relates and, then, (B) in accordance with the provisions of paragraph (d), (e), or (f) of this section. Solely for purposes of applying the fair market value limitation and other limitations of § 1.338(b)–2T(c)(1) and (2) to a contingent income asset, the fair market value of such asset at the beginning of the day after the acquisition date shall (may, in the case of qualified stock purchases for which the acquisition date is before September 16, 1988) be redetermined when the contingent amount (or reduction amount) is taken into account under paragraph (c) of this section. (For purposes of this redetermination, only those circumstances that resulted in the increase (or decrease) to adjusted grossed-up basis are taken into account.) However, the fair market value limitation and other limitations of § 1.338(b)–2T(c)(1) and (2) as they apply to target's other acquisition date assets are not affected by such adjustments.

(2) *Internal Revenue Service authority.* In connection with the examination of a return, the District Director, in appropriate cases, may apply the principles of paragraph (g)(1) of this section to allocate an increase (or decrease) in adjusted grossed-up basis among particular of target's acquisition date assets to the extent such allocation is necessary to reflect properly the consideration that relates to each of those assets.

(h) *Changes in old target's aggregate deemed sale price of assets*—(1) *General rule*—(i) *In general.* Pursuant to general principles of tax law, the price at which old target is deemed to have sold its assets shall be adjusted to take into account adjustment events occurring after the acquisition date. In making such an adjustment, recognition of income (or loss) under this paragraph (h) with respect to the deemed sale of assets is not precluded because the target is treated as a new corporation after the acquisition date. To the extent general tax law principles require seller to account for adjustment events, target (or a member of the selling consolidated group in the event of an election under section 338(h)(10)) shall make such an accounting, which may result in reporting income, loss, or other amount.

(ii) *Redetermination of aggregate deemed sale price if the elective formula under section 338(h)(11) is used.* If the elective formula under section 338(h)(11) is used to determine the aggregate deemed sale price, that price generally shall be redetermined under § 1.338–3(d) (or § 1.338(h)(10)–1(f) if an election under section 338(h)(10) is in effect) to take into account, to the extent required by general principles of tax law, adjustment events occurring after the acquisition date. For example, the aggregate deemed sale price generally shall be redetermined to take into account any additional payments

made to the seller for recently purchased stock. If an increase (or decrease) in adjusted grossed-up basis is specifically allocated to a contingent income asset (or other asset) under paragraph (g) of this section, then any redetermination of the fair market value of the asset under that paragraph (g) is taken into account in making adjustments to the aggregate deemed sale price allocable to such asset.

(iii) *Redetermination of aggregate deemed sale price if the elective formula under section 338(h)(11) is not used.* If the elective formula under section 338(h)(11) is not used to determine the aggregate deemed sale price, an adjustment to aggregate deemed sale price may be required under this paragraph (h) only with respect to assets described in paragraph (g)(1)(i) and (2) of this section. In such a case, the adjustment to the portion of the aggregate deemed sale price allocable to such asset shall be the amount of the increase (or decrease) in adjusted grossed-up basis specifically allocated to the asset. However, the amount of the increase (or decrease) allocated to such asset shall not increase (or decrease) the portion of the aggregate deemed sale price allocable to the asset (taking into account all previous adjustments under this paragraph (h)) above or below the fair market value of such asset as of the date an adjustment under this paragraph (h) is required.

(2) *Procedure for transactions in which section 338(h)(10) is not elected*—(i) *Income or loss included in new target's return.* If an election under section 338(h)(10) is not made, any income, loss, or other amount of old target resulting from a change in the aggregate deemed sale price of old target's assets pursuant to paragraph (h)(1) of this section shall be included in new target's income tax return for new target's taxable year in which such change occurs. The amount of such income, loss, or other amount is determined with reference to old target's deemed sale of assets on the acquisition date. Thus, for example, if after the acquisition date there is an increase in the allocable aggregate deemed sale price of section 1245 property for which the recomputed basis (but not the adjusted basis) exceeded the portion of the aggregate deemed sale price allocable to that particular asset on the acquisition date, the additional gain shall be treated as ordinary income to the extent it does not exceed such excess amount. See paragraph (h)(2)(ii) for the special treatment of old target's carryovers and carrybacks. Although included in new target's income tax return, such income, loss, or other amount is separately accounted for as an item of old target and may not be offset by income, loss, credit, or other amount of new target. The amount of tax on income of old target recognized pursuant to this paragraph (h) is determined as if such income had been recognized in old target's taxable year ending at the close of the acquisition date. Any increase (or decrease) in new target's income tax liability by reason of this paragraph (h)(2)(i) shall be allocated among new target's acquisition date assets in accordance with paragraph (d), (e), (f), or (g) of this section when such liability becomes fixed and determinable.

(ii) *Carryovers and carrybacks*—(A) *Loss carryovers to new target taxable years.* A net operating loss or net capital loss of old target may be carried forward to a taxable year of new target, under the principles of section 172 or 1212, as the case may be, but is allowed as a deduction only to the extent of any recognized income of old target for such taxable year, as described in paragraph (h)(2)(i) of this section. For this purpose, however, taxable years of new target shall not be taken into account in applying the 15-taxable-year limitation (or other similar limitation) in section 172(b)(1) or the 5-taxable-year limitation (or other similar limitation) in section 1212(a)(1)(B). In applying sections 172(b) and 1212(a)(1), only income, deductions, and other amounts of old target shall be taken into account. Thus, if old target has an unexpired net operating loss at the close of its taxable year in which the deemed asset sale occurred that could be carried forward to a subsequent taxable year, such loss may be carried forward until it is absorbed by old target's income.

(B) *Loss carrybacks to taxable years of old target.* An ordinary loss or capital loss accounted for as a separate item of

old target under paragraph (h)(2)(i) of this section may be carried back to a taxable year of old target under the principles of section 172 or 1212, as the case may be. For this purpose, taxable years of new target shall not be taken into account in applying the 3-taxable-year limitation (or other similar limitation) in section 172(b) or 1212(a).

(C) *Credit carryovers and carrybacks.* The principles described in paragraph (h)(2)(ii)(A) and (B) of this section apply to carryovers and carrybacks of amounts for purposes of determining the amount of a credit allowable under part IV, subchapter A, chapter 1 of the Code. Thus, for example, credit carryovers of old target may only offset income tax attributable to items described in paragraph (h)(2)(i) of this section.

(3) *Procedure for transactions in which section 338(h)(10) is elected*— If an election under section 338(h)(10) is made, any income, loss, or other amount resulting from a change in the aggregate deemed sale price of old target's assets pursuant to paragraph (h)(1) of this section shall be accounted for in determining the taxable income (or other amount) of the member of the selling consolidated group (or other person) to which such income, loss, or other amount is attributable for the taxable year in which such change occurs. The amount of such income, loss, or other amount is determined with reference to old target's deemed sale of assets on the acquisition date.

(i) [Reserved]

(j) *Examples.* This section is illustrated by the following examples. Any contingent amount or reduction amount described in the following examples is exclusive of interest. For rules characterizing deferred contingent payments as principal or interest, see regulations under section 1274 and 1275 (d) or 483.

Example 1. (i)(A) T's assets other than goodwill and going concern value, and their fair market values at the beginning of the day after the acquisition date, are as follows:

Asset class	Asset	Fair market value
III	Building	$100
III	Stock of X (not a target)	200
	Total	$300

(B) T has no liabilities other than a contingent obligation and T does not use the elective formula under section 338(h)(11).

(ii)(A) On September 1, 1997, P purchases all of the outstanding stock of T for $270 and makes an express election for T. The grossed-up basis of the T stock and T's adjusted grossed-up basis (AGUB) are both $270. The AGUB is ratably allocated among T's Class III assets in proportion to their fair market values as follows:

Asset	Basis
Building ($270×100/300)	$ 90
Stock ($270×200/300)	180
Total	$270

(B) No amount is allocated to the Class V assets. New T is a calendar year taxpayer. Assume that the X stock is a capital asset in the hands of new T.

(iii) On January 1, 1998, new T sells the X stock and uses the proceeds to purchase inventory.

(iv) On June 30, 1999, the contingent liability of old T becomes fixed and determinable. The amount of the liability is $60.

(v) T's AGUB increases by $60 from $270 to $330. This $60 increase in AGUB is first allocated among T's acquisition date assets in accordance with the provisions of § 1.338(b)–2T. Since the redetermined AGUB for T ($330) exceeds the sum of the fair market values at the beginning of the day after the acquisition date of the Class III acquisition date assets ($300), AGUB allocated to those assets is limited to those fair market values under § 1.338(b)–2T(c)(1). As there are no Class IV assets, the remaining AGUB of $30 is allocated to goodwill and going concern value (Class V assets). The amount of increase in AGUB allocated to each acquisition date asset is determined as follows:

Asset	Original AGUB	Redetermined AGUB	Increase in AGUB
Building	$ 90	$100	$10
X Stock	180	200	20
Goodwill and going concern value	0	30	30
Total	$270	$330	$60

(vi) Since the X stock was disposed of before the contingent liability became fixed and determinable, no amount of the increase in AGUB attributable to such stock may be allocated to any T asset. Rather, such amount, $20, is allowed as a capital loss to T for the taxable year 1999 under the principles of *Arrowsmith v. Commissioner,* 344 U.S. 6 (1952). In addition, the $10 increase in AGUB allocated to the building and the $30 increase in AGUB allocated to the goodwill and going concern value are treated as basis redeterminations in 1999. See paragraph (d)(2) of this section.

Example 2. (i) On January 1, 1998, P purchases all of the outstanding stock of T and makes an express election for T. T does not use the elective formula under section 338(h)(11). Assume that the AGUB of T is $500 and is allocated among T's acquisition date assets as follows:

Asset class	Asset	Basis
III	Machinery	$150
III	Land	250
V	Goodwill and going concern value	100
	Total	$500

(ii) On September 30, 1998, P filed a claim against the selling shareholders of T in a court of appropriate jurisdiction alleging fraud in the sale of the T stock.

(iii) On January 1, 2007, the former shareholders refund part of the purchase price to P in a settlement of the lawsuit. This refund results in a decrease of T's AGUB of $140.

(iv) Under paragraph (e)(1) of this section, the decrease in AGUB is allocated among T's acquisition date assets. First, because $100 was originally allocated to the Class V assets, $100 of the decrease is allocated to those assets. As there were no Class IV assets acquired, the remaining decrease in AGUB ($40) is allocated to the Class III assets in proportion to their fair market values at the beginning of the day after the acquisition date. Thus, $15 is allocated to the machinery ($40 x 150/$400) and $25 to the land ($40 x 250/$400).

(v) Assume that, as a result of deductions under section 168, the adjusted basis of the machinery immediately before the decrease in AGUB is zero. The machinery is treated as if it were disposed of before the decrease is taken into account. In 2007, T recognizes income of $15, the character of which is determined under the principles of *Arrowsmith* v. *Commissioner,* 344 U.S. 6 (1952), and the tax benefit rule. No adjustment to the basis of T's assets is made for any tax paid on this amount. Assume also that, as a result of amortization deductions, the adjusted basis of the goodwill and going concern value immediately before the decrease in AGUB is $40. A similar adjustment to income is made in 2007 with respect to the $60 of previously amortized goodwill and going concern value.

(vi) In summary, the basis of T's acquisition date assets, as of January 1, 2007, is as follows:

Asset	Basis
Machinery	$0
Land	225
Goodwill and going concern value	0

Example 3. (i) Assume that the facts are the same as *Example 2* of §1.338(b)–2T(d) except that the recently purchased stock is acquired for $1,600 plus additional payments that are contingent upon T's future earnings. Thus, T's AGUB, determined as of the beginning of the day after the acquisition date (after reduction by T's cash of $200), is $2,500 and is allocable among T's Class II, III, IV, and V acquisition date assets pursuant to §1.338(b)–2T(c)(3)(iii) as follows:

Asset	Basis
Portfolio of marketable securities	*$268
Inventory	268
Accounts receivable	536
Building	714
Land	178
Investment in T1	402
Goodwill and going concern value	134
Total	$2,500

*All numbers rounded for convenience.

(ii) Subsequent to the close of new target's first taxable year, P pays an additional $200 for its recently purchased T stock.

(iii) T's AGUB increase by $200, from $2,700 to $2,900. This $200 increase in AGUB is accounted for in accordance with the provisions of §1.338(b)–2T (c)(3)(iii) and paragraph (f) of this section.

(iv) The hypothetical purchase price of the T stock is redetermined as follows:

Grossed-up basis of recently purchased stock as determined under §1.338–4T(h) ($1,800/.8)	$2,250
Liabilities	1,000
Total	$3,250

(v) Under §1.338(b)–2T(c)(3) the redetermined fair market value of Class V assets is deemed to be $400, i.e., the hypothetical purchase price, as redetermined, of $3,250 minus $2,850 (the sum of T's cash, $200, and the fair market values of its Class II, III, and IV assets, $2,650).

(vi) The amount of AGUB available to allocate to T's Class II, III, IV, and V acquisition date assets is $2,700 (i.e., redetermined AGUB reduced by cash). AGUB allocable to each of T's acquisition date assets (i.e., the redetermined (c)(3) amount) is redetermined using the deemed fair market value of the Class V assets from paragraph (v) of this Example as follows:

Asset	Basis
Portfolio of marketable securities	*$266
Inventory	266
Accounts receivable	531
Building	708
Land	177
Investment in T1	398
Goodwill and going concern value	354
Total	$2,700

*All numbers rounded for convenience.

(vii) As illustrated by this example, the application of paragraph (f) of this section results in a basis increase for some assets and a basis decrease for other assets. The amount of increase (or decrease) in AGUB allocated to each acquisition date asset is determined as follows:

Asset	Original AGUB	Redetermined (c)(3) amount	Increase (or decrease) in AGUB
Portfolio of marketable securities	$268	$266	$(2)
Inventory	268	266	(2)
Accounts receivable	536	531	(5)
Building	714	708	(6)
Land	178	177	(1)
Investment in T1	402	398	(4)
Goodwill and going concern value	134	354	220
Total	$2,500	$2,700	$200

(viii) If P made a gain recognition election under section 338 (b)(3) with respect to its nonrecently purchased stock, paragraph (f) of this section would be inapplicable.

Example 4. (i) On January 1, 1987, P purchases all of the outstanding T stock and makes an express election for T. The fair market value of T's assets (other than goodwill and going concern value) as of the beginning of the following day is as follows:

Asset class	Assets	Fair market value
III	Equipment	$200
III	Accounts receivable	100
III	Building	500
	Total	800

(ii) T has elected the elective ADSP formula, in accordance with § 1.338–4T(h)(3) *Answer 2* (ii)(B) (as contained in the CFR edition revised as of April 1, 1993) to determine the aggregate deemed sale price of old T's assets. Assume that the ADSP as so determined is $700. Assume also that the AGUB is equal to $700. T has no liabilities.

(iii) The AGUB of $700 is ratably allocated among T's Class III acquisition date assets in proportion to their fair market values as follows:

Asset	Basis
Equipment ($700×200/800)	$175.00
Accounts receivable ($700×100/800)	87.50
Building ($700×500/800)	437.50
Total	700.00

No amount is allocated to goodwill (or going concern value).

(iv) P and T file a consolidated return for 1987 and each following year with P as the common parent of the affiliated group.

(v) In 1990, a contingent amount of $117 is paid by P for the stock of old T. As a result, additional income is recognized under section 1245 by old T for 1990 on the deemed sale of old T's assets. This income must be reported on the consolidated return of new T for 1990, but it is separately accounted for and may not be absorbed by losses or deductions of P or of new T. Assume that the tax on this income is $3.

(vi) In 1990, there is an increase in T's AGUB of $120, *i.e.*, $117 + $3. The amount of this increase allocated to each acquisition date asset is determined as follows:

Asset	Original AGUB	Redetermined AGUB	Increase
Equipment	$175.00	$200.00	$25.00
Accounts receivable	87.50	100.00	12.50
Building	437.50	500.00	62.50
Goodwill (and going concern value)	0.00	20.00	20.00
Total	700.00	820.00	120.00

Example 5. (i) On June 1, 1990, P purchases all of the stock of T and makes an express election for T. T has one item of section 38 property whose basis on June 2, 1990 is $100,000. An investment credit of $8,000 is allowed to new T for the equipment because of an election under section 48 (q)(4).

(ii) In 1992, part of the purchase price of the T stock is refunded to P. Assume that the amount of the resulting decrease in AGUB allocated to the machinery is $7,000.

Pursuant to § 1.47–2(c), the machinery ceases to be section 38 property to the extent of $7,000 of its original basis.

(iii) The additional tax of $560 (8% ×$7,000) resulting from the machine ceasing to be section 38 property is reported on T's return for 1992. Such amount is not an adjustment to AGUB.

Example 6. (i)(A) T has three assets (other than goodwill and going concern value) whose fair market values as of the beginning of the day after the acquisition date are as follows:

Asset class	Asset	Fair market value
III	Building	$100
III	Equipment	50
IV	Secret process	50
	Total	$200

(B) The secret process is a section 197 intangible. T has no liabilities. Assume that no election under section 338 (h)(10) or (h)(11) is in effect.

(ii) On January 1, 1998, P purchases all of the outstanding T stock for $225 plus 50 percent of the net profits generated by the secret process for each of the next three years, determinable and payable on January 1 of each following year. P and T are calendar year taxpayers.

(iii) As of the beginning of January 2, 1998, T's AGUB is $225, allocated as follows:

Asset class	Asset	Basis
III	Building	$100
III	Equipment	50
IV	Secret process	50
V	Goodwill and going concern value	25
	Total	$225

(iv) On January 1, 1999, $5 is paid by P for the T stock by reason of the net profits from the secret process. The payments are not attributable in any respect to any of T's other acquisition date assets. As a result, T's AGUB on January 1, 1999 is increased by $5.

(v) Assume that on January 1, 1999, the fair market value of the secret process is redetermined to be $52. (For purposes of this redetermination, only those circumstances that resulted in the increase to AGUB are taken into account.)

(vi) On January 1, 1999, only $2 of the $5 increase in AGUB is allocated to the secret process because the increase in AGUB so allocated cannot increase the basis of the secret process above its redetermined fair market value ($52). The balance of the increase is allocated to goodwill and going concern value because the fair market value limitation of § 1.338(b)–2T(c)(1) precludes allocating additional AGUB to the Class III and IV assets.

(vii) The price for which old target is deemed to have sold the secret process is increased to reflect the $2 increase allocated to its basis to new target. See § 1.338–3(d) and paragraph (h)(1) of this section.

(viii) If the fair market value of the secret process as of January 1, 1999, is unchanged from the fair market value as of the beginning of the day after the acquisition date, then the $5 increase in AGUB is allocated to T's goodwill and going concern value.

Example 7. (i) The facts are the same as in *Example 6* except that—

(A) The secret process is valued at $75 as of the beginning of the day after the acquisition date; and

(B) P pays $250 for the T stock and the former T shareholders agree to refund a portion of the purchase price to P for each of the three years that the net income from the secret process is less than $15 per year, determinable and payable on January 1 of the next year.

(ii) Assume that the secret process in the hands of new T is an amortizable section 197 intangible and, therefore, on January 1, 1999, new T's adjusted basis in the secret process is $70 (i.e., $75–$5 of allowable amortization).

(iii) Assume the net income from the process is less than $15 for 1998, and on January 1, 1999, P receives a refund that reduces the stock purchase price by $3.

(iv) Assume that as of January 1, 1999, the fair market value of the secret process is redetermined to be $65. (For purposes of this redetermination, only those circumstances that resulted in the decrease to AGUB are taken into account.)

(v) As of January 1, 1999, the AGUB of T is decreased by $3. This decrease is allocated to the secret process, the basis of which becomes $67 (i.e., $70–$3) and is amortizable over the remaining 14 years.

(vi) The price for which old target is deemed to have sold the secret process is decreased to reflect the $3 decrease allocated to its basis to new target. See § 1.338–3(d) and paragraph (h)(1) of this section.

Example 8. The facts are the same as in *Example 6* except that the intangible Class IV asset is a patent instead of a secret process. The redetermination of the fair market value of the patent on January 1, 1999, is made without regard to the decrease in the remaining life of the patent because that is not a circumstance that resulted in the increase in AGUB.

[T.D. 8072, 51 FR 10626, Mar. 28, 1986, as amended by T.D. 8215, 53 FR 27043, July 18, 1988; T.D. 8515, 59 FR 2981, Jan. 20, 1994; T.D. 8515, 59 FR 2984, Jan. 20, 1994; T.D. 8711, 62 FR 2270, Jan. 16, 1997]

§ 1.338(h)(10)–1 Deemed asset sale and liquidation.

(a) *Scope.* This section prescribes rules relating to section 338(h)(10) elections. If an election is made, target generally is deemed to sell all of its assets and distribute the proceeds in complete liquidation. Thus, the sale of target stock included in the qualified stock purchase generally is ignored. A section 338(h)(10) election may be made for target only if it is a member of a selling consolidated group, a member of a selling affiliated group filing separate returns, or an S corporation.

(b) *Nomenclature.* For purposes of this section, the nomenclature in § 1.338–1(b) does not apply; instead:

(1) T is a section 338(h)(10) target. Old T refers to T for periods ending on or before the close of T's acquisition date; new T refers to T for subsequent periods.

(2) P is the purchasing corporation. Unless the context otherwise requires, any reference to P is a reference to all purchasing corporations. See sections 338(h)(5) and (8).

(c) *Definitions*—(1) *Section 338(h)(10) target.* A *section 338(h)(10) target* is a domestic corporation that is a target for which a section 338(h)(10) election is made.

(2) *S corporation shareholders. S corporation shareholders* are the T shareholders if T is an S corporation immediately before T's acquisition date. Thus, if T is an S corporation, for T to be a section 338(h)(10) target, P can purchase no T stock before the acquisition date.

(3) *Selling consolidated group.* A *selling consolidated group* is a selling group that files a consolidated return for the period that includes T's acquisition date. Thus, T is a member of the selling consolidated group on the acquisition date.

(4) *Selling affiliate.* A *selling affiliate* is a domestic corporation that is not a member of the selling consolidated group and from which, on the acquisition date, P purchases an amount of T stock that satisfies the requirements of section 1504(a)(2). Thus, on the acquisition date, the selling affiliate and T are affiliated (within the meaning of section 1504) but are not includible members of the same consolidated group.

(d) *Section 338(h)(10) election*—(1) *In general.* A section 338(h)(10) election may be made for T if P acquires T in a qualified stock purchase from—

(i) A selling consolidated group;

(ii) A selling affiliate; or

(iii) S corporation shareholders.

(2) *Simultaneous joint election requirement.* A section 338(h)(10) election is made jointly by P and the selling consolidated group (or the selling affiliate or the S corporation shareholders) on Form 8023 in accordance with the instructions to the form. The section 338(h)(10) election must be made not later than the 15th day of the 9th month beginning after the month in which the acquisition date occurs.

(3) *Irrevocability.* A section 338(h)(10) election is irrevocable. If a section 338(h)(10) election is made for T, a section 338 election is deemed made for T.

(4) *Effect of invalid election.* If a section 338(h)(10) election for T is not valid, the section 338 election for T is also not valid.

(e) *Certain consequences of section 338(h)(10) election.* This paragraph (e) applies if an election under section 338(h)(10) is made.

(1) *Old T.* Old T recognizes gain or loss as if, while old T was a member of the selling consolidated group (or owned by the selling affiliate or S corporation shareholders), it sold all of its assets in a single transaction at the close of the acquisition date (but before the deemed liquidation). Old T's gain or loss on each asset is determined under paragraph (f) of this section. If P makes a qualified stock purchase from a selling affiliate or S corporation shareholders, the principles of §§ 1.338–1(c)(6) and (e)(1), (5), and (6)(i) apply to the return filed by old T that includes the gain or loss and tax liability from the deemed sale.

(2) *Selling consolidated group, selling affiliate, or S corporation shareholders*—(i) *In general.* This paragraph (e)(2) describes the treatment of members of the selling consolidated group, the selling affiliate, and S corporation shareholders.

(ii) *Deemed liquidation for old T.* For purposes of subtitle A of the Internal Revenue Code, old T is treated as if,

while T is a member of the selling consolidated group (or owned by the selling affiliate or S corporation shareholders), it distributed all of its assets in complete liquidation. If T is an S corporation immediately before the acquisition date, nothing in this section prevents a holder of T stock from taking deemed sale gain into account under section 1366 and 1367. See section 331 or 332 for gain or loss recognized by the old T shareholders as a result of the deemed liquidation.

(iii) *Basis of T stock not acquired.* The basis of T stock retained by the selling consolidated group (or the selling affiliate or an S corporation shareholder) is its fair market value. For purposes of this paragraph, the fair market value of all of the T stock equals G less any reductions in determining MADSP for acquisition costs of P incurred in connection with the qualified stock purchase that are capitalized in the basis of recently purchased T stock. See paragraph (f) of this section for the definition of G and a description of MADSP.

(iv) *T stock sale.* No gain or loss is recognized on the sale or exchange by the selling consolidated group (or the selling affiliate or an S corporation shareholder) of T stock included in the qualified stock purchase. If T is an S corporation immediately before T's acquisition date, the sale or exchange of old T stock to P on the acquisition date does not result in a termination of the section 1362(a) election for the S corporation.

(v) *Example.* This paragraph (e)(2) may be illustrated by the following example.

Example. (a) S1 owns all of the T stock and T owns all of the stock of T1 and T2. S1 is the common parent of a consolidated group that includes T, T1, and T2. P makes a qualified stock purchase of all of the T stock from S1. A section 338(h)(10) election is made for T. A section 338(h)(10) election also is made for the deemed purchase of T1. A section 338 election is not made for T2.

(b) S1 does not recognize gain or loss on the sale of the T stock and T does not recognize gain or loss on the sale of the T1 stock because T and T1 are section 338(h)(10) targets. Thus, for example, gain or loss realized on the sale of the T or T1 stock is not taken into account in earnings and profits. However, because a section 338 election is not made for T2, T must recognize any gain or loss realized on the deemed sale of the T2 stock. See § 1.338–3(c).

(c) The results would be the same if S1, T, T1, and T2 are not members of any consolidated group, because S1 and T are selling affiliates.

(3) *Certain minority shareholders*—(i) *In general.* This paragraph (e)(3) describes the treatment of shareholders of old T other than members of the selling consolidated group, the selling affiliate, S corporation shareholders, and P. A shareholder to which this paragraph (e)(3) applies is called a *minority shareholder.*

(ii) *T stock sale.* Notwithstanding paragraph (e)(2)(iv) of this section, a minority shareholder recognizes gain or loss on the shareholder's sale or exchange of T stock included in the qualified stock purchase.

(iii) *T stock not acquired.* A minority shareholder does not recognize gain or loss under this section with respect to shares of T stock retained by the shareholder. The shareholder's basis and holding period for that T stock is not affected by the section 338(h)(10) election.

(4) *P.* P is treated as making a gain recognition election for its nonrecently purchased T stock. See § 1.338(b)–1(e)(2) (effect of a gain recognition election) and § 1.338(b)–1(e)(3)(ii) (gain recognition election deemed made).

(5) *New T.* The adjusted grossed-up basis for new T's assets is determined in accordance with § 1.338(b)–1(c) and is allocated among the assets in accordance with §§ 1.338(b)–2T and 1.338(b)–3T. Notwithstanding paragraph (e)(2)(ii) of this section, new T remains liable for the tax liabilities of old T (including tax liabilities resulting from the deemed sale of assets). For example, new T remains liable for the tax liabilities of the members of any consolidated group that are attributable to taxable years in which those corporations and old T joined in the same consolidated return. See § 1.1502–6(a).

(6) *Consolidated return of selling consolidated group.* If P acquires T in a qualified stock purchase from a selling consolidated group—

(i) The selling consolidated group must file a consolidated return for the taxable period that includes the acquisition date;

(ii) A consolidated return for the selling consolidated group for that period may not be withdrawn on or after the day that a section 338(h)(10) election is made for T; and

(iii) Permission to discontinue filing consolidated returns cannot be granted for, and shall not apply to, that period or any of the immediately preceding taxable periods during which consolidated returns continuously have been filed.

(f) *Deemed sale price*—(1) *General rule.* The price at which each asset of old T is deemed to have been sold is calculated by—

(i) Determining the modified ADSP (MADSP); and

(ii) Then allocating MADSP among the assets of old T in accordance with § 1.338(b)–2T (without taking into account § 1.338(b)–2T(c)(2)).

(2) *Formula.* (i) The MADSP formula is as follows:

MADSP=G+L+X

(ii) For purposes of this formula—

(A) *G* is the grossed-up basis of P's recently purchased T stock determined under § 1.338–3(d)(2).

(B) *L* is new T's liabilities.

(C) *X* is other relevant items.

(3) *Liabilities.* Liabilities taken into account are the liabilities of new target described in § 1.338(b)–1(f). The amount of the liabilities of new T taken into account to determine MADSP is determined as if old T had sold its assets to an unrelated person for consideration that included the liabilities.

(4) *Other relevant items.* Other relevant items include reductions for—

(i) Acquisition costs of P incurred in connection with the qualified stock purchase that are capitalized in the basis of recently purchased T stock (e.g., brokerage commissions and any similar costs incurred by P to acquire T stock); and

(ii) Selling costs of the selling consolidated group (or selling affiliate or S corporation shareholders) incurred in connection with the qualified stock purchase that reduce the amount realized on the sale of recently purchased T stock (e.g., brokerage commissions and any similar costs incurred by the selling group to sell T stock).

(5) *Cross-reference.* For adjustments to MADSP because of events occurring after the acquisition date, see § 1.338(b)–3T(h).

(g) *Examples.* (1) For purposes of the examples in this paragraph (g), unless otherwise provided, T, a member of a selling consolidated group, has only one class of stock, all of which is owned by S1. As of the close of Year 1, old T had no items described in section 381(c) (including no accumulated earnings and profits nor deficit in earnings and profits). On March 1 of Year 2, S1 sells its T stock to P for $80,000, and a section 338(h)(10) election is made for T. As of the close of March 1 of Year 2, old T's current earnings and profits, other than those generated from the deemed sale of its assets, are $21,950.

(2) Paragraphs (e) and (f) of this section may be illustrated by the following examples:

Example 1. (a) On March 1 of Year 2, T owns land with a $50,000 basis and $75,000 fair market value and equipment with a $30,000 adjusted basis, $70,000 recomputed basis, and $60,000 fair market value. T also has a $40,000 liability. S1 pays old T's allocable share of the selling group's consolidated tax liability for Year 2, which is $13,600 and attributable to the deemed sale of T's assets.

(b) The MADSP of $120,000 ($80,000+$40,000+0) is allocated to each asset as follows:

Assets	Basis	FMV	Fraction	Allocable MADSP
Land	$50,000	$75,000	5/9	$66,667
Equipment	30,000	60,000	4/9	53,333
Total	80,000	135,000	1	120,000

(c) Under paragraph (e)(1) of this section, old T has gain on the deemed sale of $40,000 (consisting of $16,667 of capital gain and $23,333 of ordinary income), which produces $40,000 of earnings and profits. As of the close of the acquisition date but after the deemed sale of its assets, old T's earnings and profits are $48,350 ($21,950 (its earnings and profits

other than from the deemed sale) plus $40,000 (T's deemed sale gain) less $13,600 (T's allocable share of the consolidated tax liability)).

(d) Under paragraph (e)(2) of this section, S1 does not recognize gain or loss upon its sale of the old T stock to P. See section 332. S1 takes into account old T's earnings and profits of $48,350, determined as of the close of the acquisition date but after the deemed sale.

(e) P's basis in new T stock is P's cost for the stock, $80,000. See section 1012.

(f) Under § 1.338(b)–1, the adjusted grossed-up basis for new T is $120,000, i.e., P's cost for the old T stock ($80,000) plus T's liability ($40,000). (Assume there are no other relevant items.) This adjusted grossed-up basis is allocated as basis among the new T assets under §§ 1.338(b)–2T and 1.338(b)–3T.

Example 2. (a) The facts are the same as in *Example 1,* except that S1 sells 80% of the old T stock to P for $64,000, rather than 100% of the old T stock for $80,000.

(b) The consequences to P, T, and S1 are the same as in *Example 1,* except that:

(i) P's basis for its 80-percent interest in the new T stock is P's $64,000 cost for the stock. See section 1012.

(ii) Under § 1.338(b)–1, the adjusted grossed-up basis for new T is $120,000 (i.e., $64,000/.8+$40,000+$0).

(iii) Under paragraph (e)(2) of this section, S1 does not recognize gain or loss with respect to the retained stock in T. See section 332.

(iv) Under paragraph (e)(2)(iii) of this section, the basis of the T stock retained by S1 is $16,000 (i.e., $120,000 − $40,000 (the MADSP amount for the old T assets over the sum of new T's liabilities immediately after the acquisition date) × .20 (the proportion of T stock retained by S1)).

Example 3. (a) The facts are the same as in *Example 2,* except that K, a shareholder unrelated to T or P, owns the 20% of the T stock that is not acquired by P in the qualified stock purchase. K's basis in its T stock is $5,000.

(b) The consequences to P, T, and S1 are the same as in *Example 3,* except that S1 takes into account only $38,680 of T's earnings and profits (80% of $48,350).

(c) Under paragraph (e)(3) of this section, K recognizes no gain or loss, and K's basis in its T stock remains at $5,000.

Example 4. (a) The facts are the same as in *Example 1,* except that the equipment is held by T1, a wholly-owned subsidiary of T, and a section 338(h)(10) election is made for T1. The T1 stock has a fair market value of $60,000. T1 has no assets other than the equipment and no liabilities. S1 pays old T's and old T1's allocable shares of the selling group's consolidated tax liability for Year 2, which are $5,667 and $7,933, respectively, and attributable to the deemed asset sales by T and T1. As of the close of the acquisition date, but before the deemed sale of the equipment, old T1 has none of the attributes listed in section 381(c).

(b) The MADSP for T1 is $53,333 (i.e., $53,333+$0+$0). On the deemed sale, T1 recognizes ordinary income of $23,333. As of the close of the acquisition date, but after the deemed sale of the equipment, T1's earnings and profits are $15,400 ($0 plus $23,333 (T1's deemed sale gain) less $7,933 (T1's allocable share of the consolidated tax liability)).

(c) The MADSP for T is $120,000, allocated $66,667 to the land and $53,333 to the stock. Old T's deemed sale gain is $16,667 (the capital gain on its deemed sale of the land). Under paragraph (e)(2) of this section, old T does not recognize gain or loss on its deemed sale of the T1 stock. See section 332.

(d) Old T takes into account old T1's earnings and profits of $15,400, determined as of the close of the acquisition date but after the deemed sale by T1 of its asset. Thus, as of the close of the acquisition date, but after the deemed sale of old T's assets, old T's earnings and profits are $48,350, ($21,950 (its earnings and profits other than from the deemed sale) plus $15,400 (from T1) plus $16,667 (T's deemed sale gain) less $5,667 (T's allocable share of the consolidated tax liability)).

(e) Under paragraph (e)(2) of this section, S1 does not recognize gain or loss upon its sale of the old T stock to P and takes into account old T's earnings and profits of $48,350, determined as of the close of the acquisition date but after the deemed sale of old T's assets.

Example 5. (a) The facts are the same as in *Example 4,* except that P already owns 20% of the T stock, which is nonrecently purchased stock with a basis of $6,000, and that P purchases the remaining 80% of the T stock from S1 for $64,000.

(b) The results are the same as in *Example 4,* except that:

(i) S1 takes into account only $38,680 of old T's earnings and profits.

(ii) Under paragraph (e)(4) of this section and § 1.338(b)–1(e)(2), P is deemed to have made a gain recognition election for its nonrecently purchased T stock. As a result, P recognizes gain of $10,000 and its basis in the nonrecently purchased T stock is increased from $6,000 to $16,000. P's basis in all the T stock is $80,000 (i.e., $64,000+$16,000). The computations are as follows:

(A) P's grossed-up basis for the recently purchased T stock is $64,000 (i.e., $64,000 (the basis of the recently purchased T stock)×(1 − .2)/(.8) (the fraction in section 338(b)(4)).

(B) P's basis amount for the nonrecently purchased T stock is $16,000 (i.e., $64,000 (the grossed-up basis in the recently purchased T stock)×(.2)/(1.0 − .2) (the fraction in section 338(b)(3)(B)).

(C) The gain recognized on the nonrecently purchased stock is $10,000 (i.e., $16,000 − $6,000).

(h) *Inapplicability of provisions.* The provisions of section 6043, § 1.331–1(d), and § 1.332–6 (relating to information returns and record keeping requirements for corporate liquidations) do not apply to the deemed liquidation of old T under paragraph (e)(2) of this section.

[T.D. 8515, 59 FR 2981, Jan. 20, 1994]

§ 1.338(i)–1 Effective dates.

(a) *In general.* Sections 1.338–1 through 1.338–5 (except § 1.338–4(h)), 1.338(b)–1, and 1.338(h)(10)–1 generally are applicable for targets with acquisition dates on or after January 20, 1994. Section 1.338–4(h) is applicable for targets with acquisition dates on or after January 20, 1997. Section 1.338–4T(h) (as contained in 26 CFR part 1 as revised April 1, 1996) is generally applicable for targets with acquisition dates on or after January 20, 1994, and before January 20, 1997.

(b) *Elective retroactive application.* A target with an acquisition date on or after January 14, 1992 and before January 20, 1994 may apply §§ 1.338–1 through 1.338–5, 1.338–4T(h) (as contained in 26 CFR part 1 as revised April 1, 1996), 1.338(b)–1, and 1.338(h)(10)–1 by including a statement with its return (including a timely filed amended return) for the period that includes the acquisition date to the effect that it is applying all of these sections pursuant to this paragraph (b). A target with an acquisition date on or after January 14, 1992, and before January 20, 1997, may choose to apply § 1.338–4(h) for the period that includes the acquisition date pursuant to paragraph (b) of this section.

(c) *MADSP.* Section 1.338(h)(10)–1(f), which requires use of the MADSP formula to determine deemed sale price, is effective for qualified stock purchases for which the acquisition date is on or after November 10, 1986, unless the acquisition occurs pursuant to a binding contract entered into before that date.

(d) *Deemed election.* The District Director's discretion to impose (without the taxpayer's consent) a deemed election under section 338(e)(1) and § 1.338–4T(f)(6)(i) (as contained in the CFR edition revised as of April 1, 1993) is revoked for all open tax years.

[T.D. 8515, 59 FR 2984, Jan. 20, 1994; as amended by T.D. 8710, 62 FR 3461, Jan. 23, 1997]

COLLAPSIBLE CORPORATIONS; FOREIGN PERSONAL HOLDING COMPANIES

§ 1.341–1 Collapsible corporations; in general.

Subject to the limitations contained in § 1.341–4 and the exceptions contained in § 1.341–6 and § 1.341–7(a), the entire gain from the actual sale or exchange of stock of a collapsible corporation, (b) amounts distributed in complete or partial liquidation of a collapsible corporation which are treated, under section 331, as payment in exchange for stock, and (c) a distribution made by a collapsible corporation which, under section 301(c)(3), is treated, to the extent it exceeds the basis of the stock, in the same manner as a gain from the sale or exchange of property, shall be considered as ordinary income.

[T.D. 7655, 44 FR 68459, Nov. 29, 1979]

§ 1.341–2 Definitions.

(a) *Determination of collapsible corporation.* (1) A collapsible corporation is defined by section 341(b)(1) to be a corporation formed or availed of principally (i) for the manufacture, construction, or production of property, (ii) for the purchase of property which (in the hands of the corporation) is property described in section 341(b)(3), or (iii) for the holding of stock in a corporation so formed or availed of, with a view to (*a*) the sale or exchange of stock by its shareholders (whether in liquidation or otherwise), or a distribution to its shareholders, prior to the realization by the corporation manufacturing, constructing, producing, or purchasing the property of a substantial part of the taxable income to be derived from such property, and (*b*) the realization by such shareholders of gain attributable to such property. See § 1.341–5 for a description of the facts which will ordinarily be considered sufficient to establish whether or not a corporation is a collapsible corporation under the rules of this section. See paragraph (d) of § 1.341–5 for examples of the application of section 341.

(2) Under section 341(b)(1) the corporation must be formed or availed of with a view to the action therein described, that is, the sale or exchange of its stock by its shareholders, or a distribution to them prior to the realization by the corporation manufacturing, constructing, producing, or purchasing the property of a substantial part of the taxable income to be derived from such property, and the realization by the shareholders of gain attributable to such property. This requirement is satisfied in any case in which such action was contemplated by those persons in a position to determine the policies of the corporation, whether by reason of their owning a majority of the voting stock of the corporation or otherwise. The requirement is satisfied whether such action was contemplated, unconditionally, conditionally, or as a recognized possibility. If the corporation was so formed or availed of, it is immaterial that a particular shareholder was not a shareholder at the time of the manufacture, construction, production, or purchase of the property, or if a shareholder at such time, did not share in such view. Any gain of such a shareholder on his stock in the corporation shall be treated in the same manner as gain of a shareholder who did share in such view. The existence of a bona fide business reason for doing business in the corporate form does not, by itself, negate the fact that the corporation may also have been formed or availed of with a view to the action described in section 341(b).

(3) A corporation is formed or availed of with a view to the action described in section 341(b) if the requisite view existed at any time during the manufacture, production, construction, or purchase referred to in that section. Thus, if the sale, exchange, or distribution is attributable solely to circumstances which arose after the manufacture, construction, production, or purchase (other than circumstances which reasonably could be anticipated at the time of such manufacture, construction, production, or purchase), the corporation shall, in the absence of compelling facts to the contrary, be considered not to have been so formed or availed of. However, if the sale, exchange or distribution is attributable to circumstances present at the time of the manufacture, construction, production, or purchase, the corporation shall, in the absence of compelling facts to the contrary, be considered to have been so formed or availed of.

(4) The property referred to in section 341(b) is that property or the aggregate of those properties with respect to which the requisite view existed. In order to ascertain the property or properties as to which the requisite view existed, reference shall be made to each property as to which, at the time of the sale, exchange, or distribution referred to in section 341(b) there has not been a realization by the corporation manufacturing, constructing, producing, or purchasing the property of a substantial part of the taxable income to be derived from such property. However, where any such property is a unit of an integrated project involving several properties similar in kind, the determination whether the requisite view existed shall be made only if a substantial part of the taxable income to be derived from the project has not been realized at the time of the sale, exchange, or distribution, and in such case the determination shall be made by reference to the aggregate of the properties constituting the single project.

(5) A corporation shall be deemed to have manufactured, constructed, produced, or purchased property if it (i) engaged in the manufacture, construction, or production of property to any extent, or (ii) holds property having a basis determined, in whole or in part, by reference to the cost of such property in the hands of a person who manufactured, constructed, produced, or purchased the property, or (iii) holds property having a basis determined, in whole or in part, by reference to the cost of property manufactured, constructed, produced, or purchased by the corporation. Thus, under subdivision (i) of this subparagraph, for example, a corporation need not have originated nor have completed the manufacture, construction, or production of the property. Under subdivision (ii) of this subparagraph, for example, if an individual were to transfer property constructed by him to a corporation in exchange for all of the capital stock of

such corporation, and such transfer qualifies under section 351, then the corporation would be deemed to have constructed the property, since the basis of the property in the hands of the corporation would, under section 362 be determined by reference to the basis of the property in the hands of the individual. Under subdivision (iii) of this subparagraph, for example, if a corporation were to exchange property constructed by it for property of like kind constructed by another person, and such exchange qualifies under section 1031(a), then the corporation would be deemed to have constructed the property received by it in the exchange, since the basis of the property received by it in the exchange would, under section 1031(d), be determined by reference to the basis of the property constructed by the corporation.

(6) In determining whether a corporation is a collapsible corporation by reason of the purchase of property, it is immaterial whether the property is purchased from the shareholders of the corporation or from persons other than such shareholders. The property, however, must be property which, in the hands of the corporation, is property of a kind described in section 341(b)(3). The determination whether property is of a kind described in section 341(b)(3) shall be made without regard to the fact that the corporation is formed or availed of with a view to the action described in section 341(b)(1).

(7) Section 341 is applicable whether the shareholder is an individual, a trust, an estate, a partnership, a company, or a corporation.

(b) *Section 341 assets.* For the purposes of this section, the term ''section 341 assets'' means the following listed property if held for less than 3 years:

(1) Stock in trade of the corporation, or other property of a kind which would properly be included in the inventory of the corporation if on hand at the close of the taxable year.

(2) Property held primarily for sale to customers in the ordinary course of a trade or business.

(3) Property used in a trade or business as defined in section 1231(b) and held for less than 3 years, except property that is or has been used in connection with the manufacture, construction, production or sale of property described in subparagraphs (1) and (2) of this paragraph.

(4) Unrealized receivables or fees pertaining to property listed in this paragraph. The term *unrealized receivables or fees* means any rights (contractual or otherwise) to payment for property listed in subparagraphs (1), (2), and (3) of this paragraph which has been delivered or is to be delivered and rights to payments for services rendered or to be rendered, to the extent such rights have not been included in the income of the corporation under the method of accounting used by it. In determining whether the assets referred to in this paragraph have been held for 3 years, the time such assets were held by a transferor shall be taken into consideration (section 1223). However, no such period shall begin before the date the manufacture, construction, production, or purchase of such assets is completed.

§ 1.341–3 Presumptions.

(a) Unless shown to the contrary a corporation shall be considered to be a collapsible corporation if at the time of the transactions described in § 1.341–1 the fair market value of the section 341 assets held by it constitutes 50 percent or more of the fair market value of its total assets and the fair market value of the section 341 assets is 120 percent or more of the adjusted basis of such assets. In determining the fair market value of the total assets, cash, obligations which are capital assets in the hands of the corporation, governmental obligations, and stock in any other corporation shall not be taken into consideration. The failure of a corporation to meet the requirements of this paragraph, shall not give rise to the presumption that the corporation was not a collapsible corporation.

(b) The following example will illustrate the application of this section:

Example A corporation, filing its income tax returns on the accrual basis, on July 31, 1955, owned assets with the following fair market values: Cash, $175,000; note receivable held for investment, $130,000; stocks of other corporations, $545,000; rents receivable, $15,000; and a building constructed by the corporation in 1953 and held thereafter as rental property, $750,000. The adjusted basis of the building on that date was $600,000. The

only debt outstanding was a $500,000 mortgage on the building. On July 31, 1955, the corporation liquidated and distributed all of its assets to its shareholders. In computing whether the fair market value of the section 341 assets (only the building) is 50 percent or more of the fair market value of the total assets, the cash, note receivable, and stocks of other corporations are not taken into account in determining the value of the total assets, with the result that the fair market value of the total assets was $765,000 ($750,000 (building) plus $15,000 rents receivable). Therefore, the value of the building is 98 percent of the total assets ($750,000÷$765,000). The value of the building is also 125 percent of the adjusted basis of the building ($750,000÷$600,000). In view of the above facts, there arises a presumption that the corporation is a collapsible corporation.

§ 1.341–4 Limitations on application of section.

(a) *General.* This section shall apply only to the extent that the recognized gain of a shareholder upon his stock in a collapsible corporation would be considered, but for the provisions of this section, as gain from the sale or exchange of a capital asset held for more than 1 year (6 months for taxable years before 1977; 9 months for taxable years beginning in 1977). Thus, if a taxpayer sells at a gain stock of a collapsible corporation which he had held for six months or less, this section would not, in any event, apply to such gain. Also, if it is determined, under provisions of law other than section 341, that a sale or exchange at a gain of stock of a collapsible corporation which has been held for more than 1 year (6 months for taxable years before 1977; 9 months for taxable years beginning in 1977) results in ordinary income rather than long-term capital gain, then this section (including the limitations contained herein) has no application whatsoever to such gain.

(b) *Stock ownership rules.* (1) This section shall apply in the case of gain realized by a shareholder upon his stock in a collapsible corporation only if the shareholder, at any time after the actual commencement of the manufacture, construction, or production of the property, or at the time of the purchase of the property described in section 341(b)(3) or at any time thereafter, (i) owned, or was considered as owning, more than 5 percent in value of the outstanding stock of the corporation, or (ii) owned stock which was considered as owned at such time by another shareholder who then owned, or was considered as owning, more than 5 percent in value of the outstanding stock of the corporation.

(2) The ownership of stock shall be determined in accordance with the rules prescribed by section 544(a)(1), (2), (3), (5), and (6), except that, in addition to the persons prescribed by section 544(a)(2), the family of an individual shall include the spouses of that individual's brothers and sisters, whether such brothers and sisters are by the whole or the half blood, and the spouses of that individual's lineal descendants.

(3) For the purpose of this limitation, treasury stock shall not be considered as outstanding stock.

(4) It is possible, under this limitation, that a shareholder in a collapsible corporation may have gain upon his stock in that corporation treated differently from the gain of another shareholder in the same collapsible corporation.

(c) *Seventy-percent rule.* (1) This section shall apply to the gain recognized during a taxable year upon the stock in a collapsible corporation only if more than 70 percent of such gain is attributable to the property referred to in section 341(b)(1). If more than 70 percent of such gain is so attributable, then all of such gain is subject to this section, and, if 70 percent or less of such gain is so attributable, then none of such gain is subject to this section.

(2) For the purpose of this limitation, the gain attributable to the property referred to in section 341(b)(1) is the excess of the recognized gain of the shareholder during the taxable year upon his stock in the collapsible corporation over the recognized gain which the shareholder would have if the property had not been manufactured, constructed, produced, or purchased. In the case of gain on a distribution in partial liquidation or a distribution described in section 301(c)(3)(A), the gain attributable to the property shall not be less than an amount which bears the same ratio to the gain on such distribution as the gain which would be attributable to

the property if there had been a complete liquidation at the time of such distribution bears to the total gain which would have resulted from such complete liquidation.

(3) Gain may be attributable to the property referred to in section 341(b)(1) even though such gain is represented by an appreciation in the value of property other than that manufactured, constructed, produced, or purchased. Where, for example, a corporation owns a tract of land and the development of one-half of the tract increases the value of the other half, the gain attributable to the developed half of the tract includes the increase in the value of the other half.

(4) The following example will illustrate the application of the 70 percent rule:

Example: On January 2, 1954, A formed the Z Corporation and contributed $1,000,000 cash in exchange for all of the stock thereof. The Z Corporation invested $400,000 in one project for the purpose of building and selling residential houses. As of December 31, 1954, the residential houses in this project were all sold, resulting in a profit of $100,000 (after taxes). Simultaneously with the development of the first project and in connection with a second and separate project the Z Corporation invested $600,000 in land for the purpose of subdividing such land into lots suitable for sale as home sites and distributing such lots in liquidation before the realization by the corporation of a substantial part of the taxable income to be realized from this second project. As of December 31, 1954, Corporation Z had derived $60,000 in profits (after taxes) from the sale of some of the lots. On January 2, 1955, the Z Corporation made a distribution in complete liquidation to shareholder A who received:

(i) $560,000 in cash and notes, and

(ii) Lots having a fair market value of $940,000.

The gain recognized to shareholder A upon the liquidation is $500,000 ($1,500,000 minus $1,000,000). The gain which would have been recognized to A if the second project had not been undertaken is $100,000 ($1,100,000 minus $1,000,000). Therefore, the gain attributable to the second project which is property referred to in section 341(b)(1), is $400,000 ($500,000 minus $100,000). Since this gain ($400,000) is more than 70 percent of the entire gain ($500,000) recognized to A on the liquidation, the entire gain so recognized is gain subject to section 341(a).

(d) *Three-year rule.* This section shall not apply to that portion of the gain of a shareholder that is realized more than three years after the actual completion of the manufacture, construction, production, or purchase of the property referred to in section 341(b)(1) to which such portion is attributable. However, if the actual completion of the manufacture, construction, production, or purchase of all of such property occurred more than 3 years before the date on which the gain is realized, this section shall not apply to any part of the gain realized.

[T.D. 6500, 25 FR 11607, Nov. 26, 1960, as amended by T.D. 6738, 29 FR 7671, June 16, 1964; T.D. 7728, 45 FR 72650, Nov. 3, 1980]

§ 1.341–5 Application of section.

(a) Whether or not a corporation is a collapsible corporation shall be determined under the regulations of §§ 1.341–2 and 1.341–3 on the basis of all the facts and circumstances in each particular case. The following paragraphs of this section set forth those facts which will ordinarily be considered sufficient to establish that a corporation is or is not a collapsible corporation. The facts set forth in the following paragraphs of this section are not exclusive of other facts which may be controlling in any particular case. For example, if the facts in paragraph (b) of this section, but not the facts in paragraph (c) of this section, are present, the corporation may nevertheless not be a collapsible corporation if there are other facts which clearly establish that the regulations of §§ 1.341–2 and 1.341–3 are not satisfied. Similarly, if the facts in paragraph (c) of this section are present, the corporation may nevertheless be a collapsible corporation if there are other facts which clearly establish that the corporation was formed or availed of in the manner described in §§ 1.341–2 and 1.341–3 or if the facts in paragraph (c) of this section are not significant by reason of other facts, such as the fact that the corporation is subject to the control of persons other than those who were in control immediately prior to the manufacture, construction, production, or purchase of the property. See § 1.341–4 for provisions which make section 341 inapplicable to certain shareholders of collapsible corporations.

(b) The following facts will ordinarily be considered sufficient (except as otherwise provided in paragraph (a) of this section and paragraph (c) of this section) to establish that a corporation is a collapsible corporation:

(1) A shareholder of the corporation sells or exchanges his stock, or receives a liquidating distribution, or a distribution described in section 301(c)(3)(A),

(2) Upon such sale, exchange, or distribution, such shareholder realizes gain attributable to the property described in subparagraphs (4) and (5) of this paragraph, and

(3) At the time of the manufacture, construction, production, or purchase of the property described in subparagraphs (4) and (5) of this paragraph, such activity was substantial in relation to the other activities of the corporation which manufactured, constructed, produced, or purchased such property.

The property referred to in subparagraphs (2) and (3) of this paragraph is that property or the aggregate of those properties which meet the following two requirements:

(4) The property is manufactured, constructed, or produced by the corporation or by another corporation stock of which is held by the corporation, or is property purchased by the corporation or by such other corporation which (in the hands of the corporation holding such property) is property described in section 341(b)(3), and

(5) At the time of the sale, exchange, or distribution described in subparagraph (1) of this paragraph, the corporation which manufactured, constructed, produced, or purchased such property has not realized a substantial part of the taxable income to be derived from such property.

In the case of property which is a unit of an integrated project involving several properties similar in kind, the rules of this subparagraph shall be applied to the aggregate of the properties constituting the single project rather than separately to such unit. Under the rules of this subparagraph, a corporation shall be considered a collapsible corporation by reason of holding stock in other corporations which manufactured, constructed, produced, or purchased the property only if the activity of the corporation in holding stock in such other corporations is substantial in relation to the other activities of the corporation.

(c) The absence of any of the facts set forth in paragraph (b) of this section or the presence of the following facts will ordinarily be considered sufficient (except as otherwise provided in paragraph (a) of this section) to establish that a corporation is not a collapsible corporation:

(1) In the case of a corporation subject to paragraph (b) of this section only by reason of the manufacture, construction, production, or purchase (either by the corporation or by another corporation the stock of which is held by the corporation) of property which is property described in section 341(b)(3)(A) and (B), the amount (both in quantity and value) of such property is not in excess of the amount which is normal—

(i) For the purpose of the business activities of the corporation which manufactured, constructed, produced, or purchased the property if such corporation has a substantial prior business history involving the use of such property and continues in business, or

(ii) For the purpose of an orderly liquidation of the business if the corporation which manufactured, constructed, produced, or purchased such property has a substantial prior business history involving the use of such property and is in the process of liquidation.

(2) In the case of a corporation subject to paragraph (b) of this section with respect to the manufacture, construction, or production (either by the corporation or by another corporation the stock of which is held by the corporation) of property, the amount of the unrealized taxable income from such property is not substantial in relation to the amount of the taxable income realized (after the completion of a material part of such manufacture, construction, or production, and prior to the sale, exchange, or distribution referred to in paragraph (b)(1) of this section) from such property and from other property manufactured, constructed, or produced by the corporation.

(d) The following examples will illustrate the application of this section:

Example (1). (i) On January 2, 1954, A formed the W Corporation and contributed $50,000 cash in exchange for all of the stock thereof. The W Corporation borrowed $900,000 from a bank and used $800,000 of such sum in the construction of an apartment house on land which it purchased for $50,000. The apartment house was completed on December 31, 1954. On December 31, 1954, the corporation, having determined that the fair market value of the apartment house, separate and apart from the land, was $900,000, made a distribution (permitted under the applicable State law) to A of $100,000. At this time, the fair market value of the land was $50,000. As of December 31, 1954, the corporation has not realized any earnings and profits. In 1955, the corporation began the operation of the apartment house and received rentals therefrom. The corporation has since continued to own and operate the building. The corporation reported on the basis of the calendar year and cash receipts and disbursements.

(ii) Since A received a distribution and realized a gain attributable to the building constructed by the corporation, since, at the time of such distribution, the corporation has not realized a substantial part of the taxable income to be derived from such building, and since the construction of the building was a substantial activity of the corporation, the W Corporation is considered a collapsible corporation under paragraph (b) of § 1.341–5. The provisions of section 341(d) do not prohibit the application of section 341(a). Therefore, the distribution, if and to the extent that it may be considered long-term capital gain rather than ordinary income without regard to section 341, will be considered ordinary income under section 341(a).

(iii) In the event of the existence of additional facts and circumstances in the above case, the corporation, notwithstanding the above facts, might not be considered a collapsible corporation. See § 1.342–2 and paragraph (a) of § 1.341–5.

Example (2). (i) On January 2, 1954, B formed X Corporation and became its sole shareholder. In August 1954, the corporation completed construction of an office building. It immediately sold this building at a gain of $50,000, included this entire gain in its return for 1954, and distributed this entire gain (less taxes) to B. In June 1955, the corporation completed construction of a second office building. In August 1955, B sold the entire stock of X Corporation at a gain of $12,000, which gain is attributable to the second building.

(ii) X Corporation is a collapsible corporation under section 341(b) for the following reasons: The gain realized through the sale of the stock of X Corporation was attributable to the second office building; the construction of that building was a substantial activity of X Corporation during the time of construction and, at the time of sale, the corporation had not realized a substantial part of the taxable income to be derived from such building. Since the provisions of section 341(d) do not prohibit the application of section 341 (a) to B, the gain of $12,000 to B is, accordingly, considered ordinary income.

Example (3). The facts are the same as in *Example (2)*, except that the following facts are shown: B was the president of the X Corporation and active in the conduct of its business. The second building was constructed as the first step in a project of the X Corporation for the development for rental purposes of a large suburban center involving the construction of several buildings by the corporation. The sale of the stock by B was caused by his retiring from all business activity as a result of illness arising after the second building was constructed. Under these additional facts, the corporation is not considered a collapsible corporation. See § 1.341–2 and paragraph (a) of § 1.341–5.

Example (4). (i) On January 2, 1948, C formed the Y Corporation and became the sole shareholder thereof. The Y Corporation has been engaged solely in the business of producing motion pictures and licensing their exhibition. On January 2, 1955, C sold all of the stock of the Y Corporation at a gain. The Y Corporation has produced one motion picture each year since its organization and before January 2, 1955, it has realized a substantial part of the taxable income to be derived from each of its motion pictures except the last one made in 1954. This last motion picture was completed September 1, 1954. As of January 2, 1955, no license had been made for its exhibition. The fair market value on January 2, 1955, of this last motion picture exceeds the cost of its production by $50,000. A material part of the production of this last picture was completed on January 1, 1954, and between that date and January 2, 1955, the corporation had realized taxable income of $500,000 from other motion pictures produced by it. The corporation has consistently distributed to its shareholder its taxable income when received (after adjustment for taxes).

(ii) Although the corporation is within paragraph (b) of this section with respect to the production of property, the amount of the unrealized income from such property ($50,000) is not substantial in relation to the amount of the income realized, after the completion of a material part of the production of such property and prior to sale of the stock, from such property and other property produced by the corporation ($500,000). Accordingly, the Y Corporation is within paragraph (c)(2) of this section, and is not considered a collapsible corporation.

Example (5). The facts are the same as in *Example (4)* except that C sold all of his stock to D on February 1, 1954. On January 2, 1955, D sold all of the Y Corporation stock at a gain, the gain being attributable to the picture completed September 1, 1954, and not released by the corporation for exhibition. In view of the change of control of the corporation, the provisions of paragraph (c)(2) of this section are not significant at the time of the sale by D, and the Y Corporation would be considered a collapsible corporation on January 2, 1955. See § 1.341–2 and paragraph (a) of § 1.341–5.

§ 1.341–6 Exceptions to application of section.

(a) *In general*—(1) *Transactions excepted.* Section 341(e) excepts 4 types of transactions from the application of the collapsible corporation provisions. These exceptions, where applicable, eliminate the necessity of determining whether a corporation is a collapsible corporation within the meaning of section 341(b) or whether any of the limitations of section 341(d) are applicable. Under section 341(e)(1) and (2), there are 2 exceptions which are designed to allow the shareholders of a corporation either to sell or exchange their stock or to receive distributions in certain complete liquidations without having any gain considered under section 341(a)(1) or (2) as gain from the sale or exchange of property which is not a capital asset. Under section 341(e)(3), a third exception is designed to permit the shareholders of a corporation to make use of section 333, relating to elections as to recognition of gain in certain complete liquidations occurring within one calendar month. Under section 341(e)(4), the fourth exception permits a corporation to make use of section 337, relating to nonrecognition of gain or loss on sales or exchanges of property by a corporation following the adoption of a plan of complete liquidation. Section 341(e) does not apply to distributions in partial liquidation or in redemption of stock (other than any such distribution pursuant to a plan of complete liquidation), or to distributions described in section 301(c)(3)(A).

(2) *Effective date.* The exceptions in section 341(e)(1), (2), and (3) apply only with respect to taxable years of shareholders beginning after December 31, 1957, and only with respect to sales or exchanges of stock and distributions of property occurring after September 2, 1958. The exception in section 341(e)(4) applies only with respect to taxable years of corporations beginning after December 31, 1957, and only if all sales or exchanges of property, and all liquidating distributions, made by the corporation under the plan of complete liquidation occur after September 2, 1958.

(3) *Definition of constructive shareholder and attribution rules.* (i) For purposes of this section, the term *constructive shareholder* means a person who does not actually own any stock but who is considered to own stock by reason of the application of subdivision (ii) of this subparagraph.

(ii) For purposes of this section (other than paragraph (k), relating to definition of related person) a person shall be considered to own the stock he actually owns plus any stock which is attributed to him by reason of applying the rules prescribed in paragraph (b)(2) and (3) of § 1.341–4. See section 341(e)(10).

(iii) As an example of this subparagraph, if a husband does not actually own any stock in a corporation but his wife is the actual owner of 5 shares in the corporation, then the husband is a constructive shareholder who is considered to own 5 shares in the corporation.

(4) *General corporate test.* No exception provided in section 341(e) applies unless a general corporate test and, where applicable, a specific shareholder test are satisfied. Under the general corporate test no taxpayer may utilize the provisions of section 341(e) unless the net increase in value (called ''net unrealized appreciation'') in the corporation's ''subsection (e) assets'' does not exceed 15 percent of the corporation's net worth. Subsection (e) assets are, in general, those assets of the corporation which, if sold at a gain by the corporation or by any actual or constructive shareholder who is considered to own more than 20 percent in value of the outstanding stock, would result in the realization of ordinary income. See paragraph (b) of this section for the definition of subsection (e) assets, and paragraph (h) of this section for definition of net unrealized appreciation. This subparagraph may be illustrated by the following examples:

Example (1). X Corporation is in the business of selling whiskey. The net unrealized appreciation in its whiskey is $20,000 and the net worth of the corporation is $100,000. Since the corporation's whiskey is a subsection (e) asset and since the net unrealized appreciation in subsection (e) assets ($20,000) exceeds 15 percent of net worth ($15,000), the general corporate test is not satisfied and section 341(e) is inapplicable to the corporation or its shareholders.

Example (2). Assume the same facts as in *Example (1)* except that X Corporation is not in the business of selling whiskey. Assume further that an actual shareholder who owns more than 20 percent in value of the outstanding X stock (or a person who is considered to own such actual shareholder's stock, such as his spouse) is in the business of selling whiskey. The result is the same as in *Example (1).*

(5) *Specific shareholder test.* Even if the general corporate test is met, a shareholder selling or exchanging his stock or receiving a distribution with respect to his stock (referred to as a ''specific shareholder'') who is considered to own more than 5 percent in value of the outstanding stock of the corporation may not utilize the benefits of the exception in section 341(e)(1) (or the exception in section 341(e)(2)) unless he satisfies the applicable specific shareholder test. In general, the specific shareholder test is satisfied if the net unrealized appreciation in subsection (e) assets of the corporation, plus the net unrealized appreciation in certain other assets of the corporation which would be subsection (e) assets in respect of the specific shareholder under the following circumstances, does not exceed 15 percent of the corporation's net worth:

(i) If the specific shareholder is considered to own more than 5 percent but not more than 20 percent in value of the outstanding stock, he must take into account the net unrealized appreciation in assets of the corporation which would be subsection (e) assets if he was considered to own more than 20 percent in value of the outstanding stock (see paragraph (c)(3)(i) of this section);

(ii) In addition, if the specific shareholder is considered to own more than 20 percent in value of the outstanding stock, he must also take into account the net unrealized appreciation in assets of the corporation which would be subsection (e) assets under section 341(e)(5)(A)(i) and (iii) if his ownership within the preceding 3 years of stock in certain ''related'' corporations were taken into account in the manner prescribed in paragraphs (c)(3)(ii) and (d) of this section.

(b) *Subsection (e) asset defined*—(1) *General.* The benefits of section 341(e) are unavailable if the net unrealized appreciation (as defined in paragraph (h) of this section) in certain assets of the corporation (hereinafter called ''subsection (e) assets'') exceeds 15 percent of the corporation's net worth. In determining whether property is a subsection (e) asset, it is immaterial whether the property is described in section 341(b), and there shall not be taken into account sections 617(d) (relating to gain from dispositions of certain mining property), 1245 and 1250 (relating to gain from dispositions of certain depreciable property), 1251 (relating to gain from disposition of farm property where farm losses offset nonfarm income), 1252 (relating to gain from disposition of farm land), and 1254 (relating to gain from disposition of natural resource recapture property).

(2) *Categories of subsection (e) assets.* The term *subsection (e) assets,* as defined in section 341(e)(5)(A)(i), (ii), (iii), and (iv), means the following categories of property held by a corporation:

(i) The first category is property (except property described in section 1231(b), without regard to any holding period prescribed therein) which in the hands of the corporation is, or in the hands of any actual or constructive shareholder who is considered to own more than 20 percent in value of the outstanding stock of the corporation would be, property gain from the sale or exchange of which would under any provision of chapter 1 of the Code (other than section 617(d), 1245, 1250, 1251, 1252, or 1254) be considered in whole or in part as gain from the sale or exchange of property which is neither a capital asset nor property described in section 1231(b). For example, included in this category is property held by a corporation which in its hands is stock in trade, inventory, or property held by it primarily for sale to customers in the ordinary course of

its trade or business regardless of whether such property is appreciated or depreciated in value. Also included in this category is property held by a corporation which is a capital asset in its hands but which, in the hands of any actual or constructive shareholder who is considered to own more than 20 percent in value of the outstanding stock, would be stock in trade, inventory, or property held by such actual or constructive shareholder primarily for sale to customers in the ordinary course of his trade or business. For additional rules relating to whether property is a subsection (e) asset under this subdivision, see subparagraphs (3), (4), and (5) of this paragraph.

(ii) The second category of subsection (e) assets is property which in the hands of the corporation is property described in section 1231(b) (without regard to any holding period prescribed therein), but only if there is net unrealized depreciation (within the meaning of paragraph (h)(2) of this section) on all such property. This subdivision may be illustrated by the following example:

Example. X Corporation owns only the following section 1231(b) property (determined without regard to holding period).

Oil leaseholds	Adjusted basis	Fair market value	Unrealized appreciation (depreciation)
No. 1	$16,000	$10,000	($6,000)
No. 2	8,000	5,000	(3,000)
No. 3	5,000	5,000	0
No. 4	3,000	5,000	2,000
Totals	32,000	25,000	(7,000)

Since with respect to such property the unrealized depreciation in property on which there is unrealized depreciation ($9,000) exceeds the unrealized appreciation in property on which there is unrealized appreciation ($2,000), all such property is included in subsection (e) assets under clause (ii) of section 341(e)(5)(A).

(iii) The third category of subsection (e) assets exists only if there is net unrealized appreciation on all property which in the hands of the corporation is property described in section 1231(b) (without regard to any holding period prescribed therein). In such case, any such section 1231(b) property (whether appreciated or depreciated) is a subsection (e) asset of the third category if, in the hands of an actual or constructive shareholder who is considered to own more than 20 percent in value of the outstanding stock of the corporation, such property would be property gain from the sale or exchange of which would under any provision of chapter 1 of the Code (other than section 617(d), 1245, 1250, 1251, 1252, or 1254) be considered in whole or in part as gain from the sale or exchange of property which is neither a capital asset nor property described in section 1231(b). Included in this category, for example, is property which in the hands of the corporation is property described in section 1231(b) (without regard to any holding period prescribed therein), but which in the hands of an actual or constructive more-than-20-percent shareholder would be property used in his trade or business held for not more than 1 year (6 months for taxable years beginning before 1977; 9 months for taxable years beginning in 1977), stock in trade, inventory, or property held by such shareholder primarily for sale to customers in the ordinary course of his trade or business. For additional rules relating to whether property is a subsection (e) asset under this subdivision, see subparagraphs (3) and (4) of this paragraph. This subdivision may be further illustrated by the following example:

Example. Assume the same facts as stated in the example under subdivision (ii) of this subparagraph, except that in addition to the oil leaseholds the corporation also owns land which has a fair market value of $30,000 and an adjusted basis of $20,000 and which in the hands of the corporation is property described in section 1231(b) (without regard to any holding period prescribed therein). Assume further that A is a constructive shareholder of the corporation who is considered to own 25 percent in value of its outstanding stock and that A holds land primarily for sale to customers in the ordinary course of his trade or business, and that no actual or constructive shareholder who is considered to own more than 20 percent in value of the stock of corporation X so holds oil leases. Since with respect to the corporation's section 1231(b) property the unrealized appreciation in such property on which there is unrealized appreciation ($12,000) exceeds the unrealized depreciation in such property on which there is unrealized depreciation ($9,000), then clause (iii), and not clause (ii),

of section 341(e)(5)(A) is applicable. Therefore, no oil lease of the corporation is a subsection (e) asset. However, since in the hands of A, a more-than-20-percent constructive shareholder, the land would be property gain from the sale or exchange of which would be considered as gain from the sale or exchange of property which is neither a capital asset nor property described in section 1231(b), the land is a subsection (e) asset. Consequently, the net unrealized appreciation on subsection (e) assets of the corporation is $10,000 since the net unrealized depreciation on the oil leases is not taken into account.

(iv) The fourth category of subsection (e) assets is property (unless included under subdivision (i), (ii), or (iii) of this subparagraph) which consists of a copyright, a literary, musical, or artistic composition, a letter or memorandum, or similar property, or any interest in any such property, if the property was created in whole or in part by the personal efforts of, or, in the case of a letter, memorandum, or property similar to a letter or memorandum, was prepared, or produced in whole or in part, for, any individual actual or constructive shareholder who is considered to own more than 5 percent in value of the outstanding stock of the corporation. For items included in the phrase ''similar property'' see paragraph (c) of § 1.1221–1. In general, property is created in whole or in part by the personal efforts of an individual if such individual performs literary, theatrical, musical, artistic, or other creative or productive work which affirmatively contributes to the creation of the property, or if such individual directs and guides others in the performance of such work. An individual, such as a corporate executive, who merely has administrative control of writers, actors, artists, or personnel and who does not substantially engage in the direction and guidance of such persons in the performance of their work, does not create property by his personal efforts. However, a letter or memorandum, or property similar to a letter or memorandum, which is prepared by personnel who are under the administrative control of an individual, such as a corporate executive, shall be deemed to have been prepared or produced for him whether or not such letter, memorandum, or similar property is reviewed by him. In addition, a letter, memorandum, or property similar to a letter or memorandum, addressed to an individual shall be considered as prepared or produced for him. In the case of a letter, memorandum, or property similar to a letter or memorandum, this subdivision applies only to sales and other dispositions occurring after July 25, 1969.

(3) *Manner of determination.* For purposes of determining whether property is a subsection (e) asset under subparagraph (2)(i) or (iii) of this paragraph, the determination as to whether property of a corporation in the hands of the corporation is, or in the hands of an actual or constructive shareholder of the corporation would be, property gain from the sale or exchange of which would under any provision of chapter 1 of the Code (other than section 617(d), 1245, 1250, 1251, 1252, or 1254) be considered in whole or in part as gain from the sale or exchange of property which is neither a capital asset nor property described in section 1231(b) shall be made as if all property of the corporation had been sold or exchanged to one person in one transaction. For example, if a corporation whose sole asset is an interest in a gas well has entered into a long-term contract for the future delivery of gas from the well, the ownership of which will pass to the buyer only after extraction or severance from the well, the determination as to whether such contract is a subsection (e) asset shall be made as if the contract were sold or exchanged to one person in one transaction together with such corporation's interest in the well. An assumed sale under this subparagraph does not affect the character of property which is held for sale to customers in the ordinary course of a person's trade or business or the character of a transaction which would be an anticipatory assignment of income. Thus, for example, if a corporation holds subdivided lots for sale to customers in the ordinary course of its trade or business, this subparagraph shall not be applied to change the manner in which the lots are held.

(4) *Shareholder reference test.* For purposes of subparagraph (2)(i) and (iii) of this paragraph, in determining whether any property of the corporation would,

in the hands of a particular actual or constructive shareholder, be property gain from the sale or exchange of which would be considered in whole or in part as gain from the sale or exchange of property which is neither a capital asset nor property described in section 1231(b), all the facts and circumstances of the direct and indirect activities of the shareholder must be taken into account. If the particular shareholder holds property primarily for sale to customers in the ordinary course of his trade or business and if similar property is held by the corporation, then in the hands of the shareholder such corporate property will be treated as held primarily for sale to customers in the ordinary course of his trade or business. Moreover, even if the shareholder does not presently so hold property which is similar to property held by the corporation, it may be determined under the particular facts and circumstances (taking into account an assumed sale of such corporate property by the shareholder, all his other direct and indirect activities, and, if applicable, the fact that he previously so held similar property) that he would hold the corporate property primarily for sale to customers in the ordinary course of his trade or business. See also paragraph (d) of this section, pertaining to effect of stock in related corporations.

(5) *Special rule for stock in shareholder's investment account.* If—

(i) A dealer in stock or securities is an actual shareholder (considered to own more than 20 percent of the outstanding stock of a corporation) and holds such stock which he actually owns in his investment account pursuant to section 1236(a), or

(ii) A dealer in stock or securities is a constructive shareholder who is considered to own more than 20 percent of the outstanding stock of a corporation,

then stock or securities held by such corporation shall not be considered subsection (e) assets under subparagraph (2)(i) of this paragraph solely because such actual or constructive shareholder is a dealer in stock or securities. However, stock held by such corporation shall be considered as a subsection (e) asset if, in the hands of any more-than-20-percent actual or constructive shareholder of the corporation, the gain (or any portion thereof) upon a sale of such stock would (if it were held for more than 1 year (6 months for taxable years beginning before 1977; 9 months for taxable years beginning in 1977), constitute, by reason of the application of section 341, gain from the sale of property which is not a capital asset. This subparagraph may be illustrated by the following example:

Example. Jones, a more-than-20-percent actual shareholder in corporation X holds his X stock in an investment account in the manner prescribed in section 1236(a). Jones is a dealer in stock and securities and holds land for sale to customers in the ordinary course of his trade or business. No other actual or constructive shareholder is a dealer in stock and securities or so holds land. X holds all of the stock in corporation Y, a collapsible corporation within the meaning of section 341(b). Y's sole asset is land on which unrealized appreciation exceeds 15 percent of Y's net worth. Since Jones holds his X stock in an investment account pursuant to section 1236(a), the Y stock cannot be considered a subsection (e) asset of the X Corporation merely because Jones is a dealer in stock and securities. Nevertheless, the Y stock is a subsection (e) asset of the X Corporation because if Jones were treated as having sold the Y stock, his gain would be treated as gain from the sale of property which is not a capital asset by reason of the application of section 341. If, however, the net unrealized appreciation on Y's land did not exceed 15 percent of Y's net worth the Y stock would not be a subsection (e) asset since section 341(e)(1) would except such sale from the application of section 341.

(c) *Sales or exchanges of stock*—(1) *General.* Section 341(e)(1) provides that, if certain requirements are satisfied, the provisions of section 341(a)(1) shall in no event apply to certain sales or exchanges of stock by a shareholder. See subparagraph (5) of this paragraph for sales or exchanges of stock which do not qualify under section 341(e)(1). Section 341(e)(1) applies to a sale or exchange of stock by a shareholder only if, at the time of such sale or exchange, the general corporate test and, if applicable, the specific shareholder test are satisfied.

(2) *General corporate test.* The general corporate test is satisfied if the net unrealized appreciation in subsection (e) assets of the corporation does not exceed an amount equal to 15 percent of

the net worth of the corporation. See paragraphs (h), (b), and (j) of this section for the definition of ''net unrealized appreciation,'' ''subsection (e) assets,'' and ''net worth.''

(3) *Specific shareholder test.* The specific shareholder test (if applicable) is satisfied if the following conditions are met:

(i) If the shareholder selling or exchanging the stock is considered to own more than 5 percent but not more than 20 percent in value of the outstanding stock, the sum of the net unrealized appreciation in the following assets of the corporation must not exceed an amount equal to 15 percent of the net worth of the corporation:

(*a*) The subsection (e) assets of the corporation, plus

(*b*) The other assets of the corporation which would be subsection (e) assets under section 341(e)(5)(A)(i) and (iii) if such shareholder were considered to own more than 20 percent in value of the outstanding stock.

(ii) If the shareholder selling or exchanging the stock is considered to own more than 20 percent in value of the outstanding stock, the sum of the net unrealized appreciation in the following assets of the corporation must not exceed an amount equal to 15 percent of the net worth of the corporation:

(*a*) The subsection (e) assets of the corporation, plus

(*b*) The other assets of the corporation which would be subsection (e) assets under section 341(e)(5)(A)(i) and (iii) if the shareholder's ownership of stock in certain related corporations were taken into account in the manner prescribed in paragraph (d) of this section.

(4) *Example.* Subparagraph (3) of this paragraph may be illustrated by the following example:

Example. Assume an individual, A, and his grandfather, G, each actually owns 3 percent in value of the stock of corporation X, a corporation holding apartment houses used in its trade or business on which net unrealized appreciation exceeds 15 percent of X's net worth. A, but not G, holds apartment houses primarily for sale to customers in the ordinary course of trade or business. Assume that X satisfies the general corporate test. A and G desire to sell their stock and to take advantage of section 341(e)(1). Since a grandfather and grandson are each considered to own the other's stock under paragraph (a)(3)(ii) of this section, A and G are each considered to own 6 percent in value of corporation X's outstanding stock. Therefore, A cannot avail himself of section 341(e)(1) since he does not satisfy the specific shareholder test prescribed in subparagraph (3)(i) of this paragraph. G, however, who is considered to own 6 percent in value of the stock, does not hold apartment houses for sale to customers in the ordinary course of trade or business. Therefore, G satisfies the specific shareholder test and may benefit from section 341(e)(1).

(5) *Nonqualifying sales or exchanges.* Section 341(e)(1) does not apply to any sale or exchange of stock to the issuing corporation. Thus, stock redemptions (including distributions in complete or partial liquidation) cannot qualify under section 341(e)(1). In addition, section 341(e)(1) does not apply in any case where a shareholder who is considered to own more than 20 percent in value of the outstanding stock sells or exchanges stock to any person related (within the meaning of paragraph (k) of this section) to such shareholder. A sale or exchange of stock of the corporation by a shareholder to which section 341(e)(1) does not apply because of this subparagraph shall have no effect on the application of this section to other sales or exchanges of stock of the corporation.

(6) *Example.* For an illustration of the application of this paragraph, see *Example (2)* in paragraph (o) of this section.

(d) *Stock in related corporations*—(1) *General.* This paragraph provides rules for applying the specific shareholder test prescribed in paragraph (c)(3)(ii) of this section for purposes of determining whether section 341(e)(1) (relating to sales or exchanges of stock of a corporation) or section 341(e)(2) (relating to distributions in complete liquidation of a corporation) applies to an actual shareholder who is considered as owning more than 20 percent in value of the corporation's outstanding stock. In general, if such a more-than-20-percent shareholder of such corporation (referred to as a ''first'' corporation) owns, or at any time during the preceding 3 years has owned, more than 20 percent in value of the outstanding stock of a ''related'' corporation (see

subparagraph (2) of this paragraph), then certain transactions in respect of the stock of the related corporation are taken into account in the manner prescribed in subparagraph (3) of this paragraph. By taking such transactions into account, such shareholder of the first corporation may be deemed to hold primarily for sale to customers in the ordinary course of trade or business property similar or related in service or use to property owned by the first corporation where his other activities, direct and indirect, are insufficient to treat him as so holding such property. See section 341(e)(1)(C) and (2)(C). The transactions in respect of stock in a related corporation are taken into account solely for the purpose of determining the extent to which assets (other than subsection (e) assets) of the first corporation are treated as subsection (e) assets under the shareholder reference tests of section 341(e)(5)(A)(i) and (iii). For purposes of this paragraph, the term ''similar or related in service or use'' shall have the same meaning as such term has in section 1033 (relating to involuntary conversions), without regard to subsection (g) thereof.

(2) *Related corporation defined.* (i) A corporation (referred to as a ''second'' corporation) is ''related'' to another corporation (referred to as a ''first'' corporation) if the stock ownership test specified in subdivision (ii) of this subparagraph and the more-than-70-percent-asset comparison test specified in subdivision (iii) of this subparagraph are met.

(ii) The stock ownership test specified in this subdivision is met—

(*a*) In the case of a sale or exchange referred to in paragraph (c)(1) of this section, if the shareholder in the first corporation is considered to own on the date of such sale or exchange more than 20 percent in value of the outstanding stock of the first corporation, and if on such date (or at any time during the 3-year period preceding such date) such shareholder in the first corporation is an actual or constructive shareholder in the second corporation who was considered to own more than 20 percent in value of the outstanding stock of the second corporation, or

(*b*) In the case of a distribution pursuant to the adoption by the first corporation of a plan of complete liquidation referred to in paragraph (e) of this section, if the shareholder in the first corporation is considered to own on any date after the adoption of such plan more than 20 percent in value of the outstanding stock of the first corporation, and if on such date (or at any time during the 3-year period preceding such date) such shareholder in the first corporation was an actual or constructive shareholder in the second corporation who was considered to own more than 20 percent in value of the outstanding stock of the second corporation.

(iii) The more-than-70-percent-asset comparison test specified in this subdivision is met if more than 70 percent in value of the assets of the second corporation (at any of the applicable times determined under subdivision (ii) of this subparagraph during which the shareholder of the first corporation is or was considered to own more than 20 percent in value of the outstanding stock of the second corporation) are, or were, assets similar or related in service or use to assets comprising more than 70 percent in value of the assets of the first corporation (at any of the times determined under subdivision (ii) of this subparagraph during which the shareholder of the first corporation is or was considered to own more than 20 percent in value of the outstanding stock of the first corporation).

(iv) This subparagraph may be illustrated by the following example:

Example. X is a first corporation and Y is a second corporation. On January 15, 1960, Jones purchased 21 percent in value of the outstanding stock of X, which he sold on January 1, 1961. On January 15, 1955, Jones had purchased 21 percent in value of the outstanding stock of Y which he sold on December 15, 1959. Since Jones owned 21 percent of the outstanding X stock on January 1, 1961 (the date he sold his X stock) and also owned 21 percent of the outstanding Y stock at some time during the 3-year period preceding January 1, 1961, the stock ownership test specified in subdivision (ii)(*a*) of this subparagraph is met. Assume that more than 70 percent in value of the assets of Y were apartment houses held for rental purposes at some time between January 1, 1958, and December 15, 1959 (the portion of the 3-year period preceding the date Jones sold his X

stock during which he was a more-than-20-percent shareholder in Y) and that more than 70 percent in value of the assets of X were apartment houses held for rental purposes at some time during the period January 15, 1960, to January 1, 1961, inclusive (the portion of the 3-year period preceding the date he sold his X stock during which he was a more-than-20-percent shareholder in X). Thus, the more-than-70-percent-asset comparison test specified in subdivision (iii) of this subparagraph is met. Accordingly, corporation Y is related to corporation X within the meaning of this subparagraph.

(3) *Manner of taking into account.* If an actual shareholder in a first corporation who is considered to own more than 20 percent of the first corporation's stock, owns or has owned stock in a related corporation, then—

(i) Any sale or exchange by such shareholder, during the applicable period specified in subparagraph (2)(ii) of this paragraph, of stock in the related corporation shall be treated as a sale or exchange by him of his proportionate share of the assets of the related corporation, if immediately before such sale or exchange he was an actual shareholder of the related corporation who was considered to own more than 20 percent in value of the outstanding stock of the related corporation. A shareholder's proportionate share of the assets of a related corporation shall be that percent of each asset of the related corporation as the fair market value of the stock of the related corporation which he actually sold or exchanged bears, immediately before such sale or exchange, to the total fair market value of the outstanding stock of such related corporation; and

(ii) Any sale or exchange of property by the related corporation during the applicable period specified in subparagraph (2)(ii) of this paragraph, gain or loss on which was not recognized to the related corporation by reason of the application of section 337(a), shall be treated as a sale or exchange by him of his proportionate share of the related corporation's property sold or exchanged, if at the time of such sale or exchange he was an actual or constructive shareholder of the related corporation who was considered to own more than 20 percent in value of the outstanding stock of such related corporation. A shareholder's proportionate share of such related corporation's property sold or exchanged shall be that percent of each such property sold or exchanged as the fair market value of the stock which he was considered to own in the related corporation immediately before such sale or exchange bears to the total fair market value of the outstanding stock of such related corporation at such time.

(4) *Example.* This paragraph may be illustrated by the following example:

Example. (i) A owns 25 percent in value of the outstanding stock of Z Corporation. On December 31, 1959, he sells all his stock in the corporation and desires to take advantage of section 341(e)(1). The only asset of Z Corporation is an appreciated apartment house held for rental purposes but which is not a subsection (e) asset. However, during the preceding 3-year period A sold 25 percent in value of the outstanding stock of each of 3 related corporations. More than 70 percent in value of the assets of each related corporation consisted of an apartment house.

(ii) In determining whether the apartment house owned by Z Corporation would be a subsection (e) asset under the shareholder reference test of section 341(e)(5)(A)(iii), A is treated as having sold a one-fourth interest in each of 3 apartment houses during the preceding 3-year period and these sales must be taken into account, together with all other facts and circumstances, in determining whether the apartment house owned by Z Corporation would be, in the hands of A, property gain from the sale or exchange of which would under any provision of chapter 1 of the Code (other than section 1245 or 1250) be considered as gain from the sale or exchange of property which is neither a capital asset nor property described in section 1231(b). However, A's sales of related corporation stock are not taken into account in determining whether section 341(e)(1) or (2) would be applicable to sales or exchanges of stock by (or liquidating distributions to) other shareholders of Z Corporation.

(e) *Distributions in certain liquidations pursuant to section 337*—(1) *In general.* Section 341(e)(2) provides that, if certain requirements are met, the provisions of section 341(a)(2) shall in no event apply to certain distributions in complete liquidation of a corporation. Section 341(e)(2) applies with respect to any distribution to a shareholder pursuant to a plan of complete liquidation if the following 3 requirements are satisfied:

(i) By reason of the application of section 341(e)(4) and paragraph (g) of

this section, section 337(a) applies to sales or exchanges of property by the corporation within the 12-month period beginning on the date of the adoption of such plan. Thus, for example, section 341(e)(2) is not applicable in any case where depreciable, amortizable, or depletable property is distributed after the date of adoption of the plan or if the corporation does not sell substantially all of the properties held by it on such date within such 12-month period, since such a distribution, or the failure to make such a sale, makes section 337(a) inapplicable under section 341(e)(4).

(ii) At all times within such 12-month period the general corporate test of paragraph (c)(2) of this section is satisfied.

(iii) In respect of the shareholder who receives the distribution—

(*a*) At all times within such 12-month period while such shareholder is considered to own more than 5 percent but not more than 20 percent in value of the outstanding stock of the corporation, the shareholder must satisfy the specific shareholder test of paragraph (c)(3)(i) of this section, and

(*b*) At all times within such 12-month period while such shareholder is considered to own more than 20 percent in value of the outstanding stock of the corporation, the shareholder must satisfy the specific shareholder test of paragraph (c)(3)(ii) of this section.

(2) *Illustration.* For an illustration of this paragraph, see *Example (4)* in paragraph (o) of this section.

(f) *Recognition of gain in certain liquidations under section 333.* Section 341(e)(3) provides that, for purposes of section 333 (relating to elections as to recognition of gain in certain complete liquidations occurring within one calendar month), a corporation is considered not to be a collapsible corporation if, at all times after the adoption of the plan of complete liquidation, the net unrealized appreciation in subsection (e) assets of the corporation does not exceed an amount equal to 15 percent of the net worth of the corporation. For purposes of the preceding sentence, the determination of subsection (e) assets shall be made in accordance with paragraph (b) of this section except that subparagraph (2)(i) and (iii) of such paragraph (b) shall apply in respect of any actual or constructive shareholder who is considered to own more than 5 percent in value of the outstanding stock (in lieu of any actual or constructive shareholder who is considered to own more than 20 percent in value of such stock). Thus, no shareholder of the corporation can qualify under paragraph (3) of section 341(e) for use of section 333 if, because of any actual or constructive shareholder who is considered to own more than 5 percent in value of the stock, this modified general corporate test is not satisfied. On the other hand, once this modified general corporate test is satisfied, all the shareholders can use section 333 (assuming that the requirements of that section are satisfied) since there is no specific shareholder test. For an illustration of this paragraph, see *Example (3)* in paragraph (o) of this section.

(g) *Gain or loss on sales or exchanges in connection with certain liquidations, pursuant to section 337*—(1) *General.* Section 341(e)(4) provides that solely for purposes of section 337, a corporation is considered not to be a collapsible corporation if (i) at all times within the 12-month period beginning on the date of the adoption of a plan of complete liquidation, the net unrealized appreciation in subsection (e) assets of the corporation does not exceed an amount equal to 15 percent of the net worth of the corporation; (ii) within the 12-month period beginning on the date of the adoption of such plan, the corporation sells substantially all of the properties held by it on such date; and (iii) following the adoption of such plan, no distribution is made of any property which in the hands of the corporation or in the hands of the distributee is property in respect of which a deduction for exhaustion, wear and tear, obsolescence, amortization, or depletion is allowable. Thus, if at the time of the adoption of the plan of liquidation the corporation is a collapsible corporation within the meaning of section 341(b) and if the preceding requirements are satisfied, then except as provided in subparagraph (2) of this paragraph section 337(a) will apply to such corporation but the corporation will continue to be a collapsible corporation within

the meaning of section 341(b) (including for purposes of section 341(e)(2)) with the result that each shareholder must still satisfy all the tests in paragraph (e) of this section before he can utilize the benefits of section 341(e)(2).

(2) *Exception to section 337 treatment.* Section 341(e)(4) shall not apply with respect to any sale or exchange of property by the corporation to any actual or constructive shareholder who is considered to own more than 20 percent in value of the outstanding stock of the corporation or to any person related (within the meaning of paragraph (k) of this section) to such actual or constructive shareholder if such property in the hands of the corporation, or in the hands of such shareholder or such related person, is property in respect of which a deduction for exhaustion, wear and tear, obsolescence, amortization, or depletion is allowable. Thus, gain or loss will be recognized on such sales or exchanges.

(3) *Cross references.* For effective date of section 341(e)(4) and this paragraph, see paragraph (a)(2) of this section. For an illustration of this paragraph, see *Example (4)* in paragraph (o) of this section.

(h) *Net unrealized appreciation and depreciation defined*—(1) *Net unrealized appreciation.* For purposes of this section, the term *net unrealized appreciation* means, with respect to the assets of a corporation, the amount by which—

(i) The unrealized appreciation in such assets on which there is unrealized appreciation, exceeds

(ii) The unrealized depreciation in such assets on which there is unrealized depreciation.

(2) *Net unrealized depreciation.* For purposes of paragraph (b)(2)(ii) of this section, there is net unrealized depreciation on all property of a corporation which in its hands is property described in section 1231(b) (without regard to any holding period prescribed therein) if—

(i) The unrealized depreciation in such property on which there is unrealized depreciation, exceeds

(ii) The unrealized appreciation in such property on which there is unrealized appreciation.

(3) *Unrealized appreciation or depreciation.* For purposes of this paragraph—

(i) The term *unrealized appreciation* means (except as provided in subparagraph (4) of this paragraph), with respect to any asset, the amount by which (*a*) the fair market value of such asset, exceeds (*b*) the adjusted basis for determining gain from the sale or other disposition of such asset; and

(ii) The term *unrealized depreciation* means, with respect to any asset, the amount by which (*a*) the adjusted basis for determining gain from the sale or other disposition of such asset, exceeds (*b*) the fair market value of such asset.

(4) *Special rule.* For purposes of determining whether the net unrealized appreciation in subsection (e) assets of a corporation exceeds an amount equal to 15 percent of the corporation's net worth under the tests of section 341(e)(1), (2), (3), and (4), in the case of any asset on the sale or exchange of which only a portion of the gain would under any provision of chapter 1 of the Code (other than section 617(d), 1245, 1250, 1251, 1252, or 1254) be considered as gain from the sale or exchange of property which is neither a capital asset nor property described in section 1231(b), there shall be taken into account only an amount equal to the unrealized appreciation in such asset which is equal to such portion of the gain. This subparagraph shall have no effect on whether paragraph (b)(2)(ii) or (iii) of this section applies for purposes of identifying the subsection (e) assets of the corporation.

(i) [Reserved]

(j) *Net worth defined.* For purposes of this section, the net worth of a corporation, as of any day, is the amount by which—

(1) The fair market value of all its assets at the close of such day, plus the amount of any distribution (taken into account at fair market value on the date of such distribution) in complete liquidation made by it on or before such day, exceeds

(2) All its liabilities at the close of such day.

In computing the fair market value of all the assets of a corporation at the close of such day, there shall be excluded any amount attributable to money or property received by it during the one-year period ending on such day for stock, or as a contribution to

capital or as paid-in surplus, if it appears that there was not a bona fide business purpose for the transaction in respect of which such money or property was received.

(k) *Related person defined*—(1) *General.* For purposes of paragraphs (c)(5) and (g)(2) of this section, the following persons are considered to be related to a shareholder:

(i) If the shareholder is an individual—

(*a*) His spouse, ancestors, and lineal descendants, and

(*b*) Any corporation which is controlled by him.

(ii) If the shareholder is a corporation—

(*a*) A corporation which controls, or is controlled by, such shareholder, and

(*b*) If more than 50 percent in value of the outstanding stock of such shareholder is owned by any person, any corporation more than 50 percent in value of the outstanding stock of which is owned by the same person.

(2) *Control.* For purposes of this paragraph, control means the ownership of stock possessing at least 50 percent of the total combined voting power of all classes of stock entitled to vote or at least 50 percent of the total value of shares of all classes of stock of the corporation.

(3) *Constructive ownership rules.* In determining the ownership of stock for purposes of this paragraph, the constructive ownership rules of section 267(c) shall apply, except that the family of an individual shall include only his spouse, ancestors, and lineal descendants.

(l) [Reserved]

(m) *Corporations and shareholders not meeting requirements.* In determining whether the provisions of section 341 (a) through (d) apply with respect to any corporation, the fact that such corporation, or such corporation with respect to any of its shareholders, does not meet the requirements of section 341(e)(1), (2), (3), or (4) shall not be taken into account, and such determination shall be made as if section 341(e) had not been enacted.

(n) *Determinations without regard to sections 617(d), 1245, 1250, 1251, 1252, and 1254.* For purposes of this section, the determination of whether gain from the sale or exchange of property would under any provision of chapter 1 of the Code be considered as gain from the sale or exchange of property which is neither a capital asset nor property described in section 1231(b) shall be made without regard to the application of sections 617(d)(1) (relating to gain from dispositions of certain mining property), 1245(a) and 1250(a) (relating to gain from dispositions of certain depreciable property), 1251(c) (relating to gain from the disposition of farm property where farm losses offset nonfarm income), 1252(a) (relating to gain from disposition of farm land), and 1254(a) (relating to gain from disposition of interest in natural resource recapture property).

(o) *Illustrations.* The operation of section 341(e) may be illustrated by the following examples:

Example (1). (i) The outstanding stock of X Corporation is actually owned, on the basis of value, 75 percent by A, 15 percent by B, and 10 percent by C. None of the stock actually owned by one is attributed to another under the constructive ownership rules of paragraph (a)(3) of this section. The corporation owns no property which, in its hands, is property gain from the sale or exchange of which would be considered (without regard to section 617(d), 1245 or 1250, 1251, or 1252) as gain from the sale or exchange of property which is neither a capital asset nor property described in section 1231(b). The corporation owns no property described in section 1231(b) except an apartment house on which the unrealized appreciation is $20,000 and which in the hands of A would be property held primarily for sale to customers in the ordinary course of trade or business. The corporation owns no property of the type described in clause (iv) of section 341(e)(5)(A). The net worth of the corporation is $100,000.

(ii) Although the apartment house in the hands of the corporation is section 1231(b) property, in the hands of A, a more-than-20-percent shareholder, the apartment house would be ordinary-income type property. Therefore, the apartment house is a subsection (e) asset under clause (iii) of section 341(e)(5)(A). Accordingly, since the net unrealized appreciation in subsection (e) assets ($20,000) exceeds 15 percent of net worth ($15,000), the general corporate test is not satisfied and section 341(e) is unavailable to the corporation or its shareholders.

Example (2). (i) Assume the same facts as in *Example (1),* except that in the hands of B, but not in the hands of A or C, the apartment house would be property held primarily

for sale to customers in the ordinary course of trade or business.

(ii) Since B does not own more than 20 percent in value of the outstanding stock, the fact that the apartment house owned by the corporation would, in his hands, be property held primarily for sale to customers in the ordinary course of trade or business does not make the apartment house owned by the corporation a subsection (e) asset. Therefore, since the net unrealized appreciation in subsection (e) assets (zero) does not exceed 15 percent of net worth, the general corporate test is satisfied. C may sell his stock to anyone (other than X Corporation) and will qualify under section 341(e)(1). However, a sale by A of his stock to persons related to A within the meaning of paragraph (k) of this section will not so qualify.

(iii) B, however, since he owns more than 5 percent but not more than 20 percent in value of the outstanding stock, must take into account not only the net unrealized appreciation in subsection (e) assets but also the net unrealized appreciation in any other assets of the corporation which would be subsection (e) assets under section 341(e)(5)(A) if he owned more than 20 percent in value of the outstanding stock. Therefore, since the apartment house owned by the corporation would be, in B's hands, property held primarily for sale to customers in the ordinary course of trade or business, and since the net unrealized appreciation in such property ($20,000) exceeds 15 percent of net worth ($15,000), B does not satisfy the specific shareholder test and therefore cannot avail himself of section 341(e)(1).

Example (3). (i) Assume the same facts as in *Example (1),* except that in the hands of B, but not in the hands of A or C, the apartment house of the corporation would be property held primarily for sale to customers in the ordinary course of trade or business. Assume further that the shareholders of X Corporation wish to avail themselves of section 333.

(ii) For purposes of section 341(e)(3), section 341(e)(5)(A)(iii) applies in respect of any shareholder who owns more than 5 percent (instead of more than 20 percent) in value of the outstanding stock. Since in the hands of B, a more-than-5-percent shareholder, the apartment house would be held primarily for sale to customers in the ordinary course of trade or business, the corporation's apartment house is a subsection (e) asset. Therefore, since the net unrealized appreciation in subsection (e) assets ($20,000) exceeds 15 percent of net worth ($15,000), no shareholder of the corporation may qualify under section 341(e)(3) for use of section 333. However, if B were not a more-than-5-percent shareholder of the corporation, or if, in his hands, the apartment house would not be held primarily for sale to customers in the ordinary course of trade or business, then all shareholders of the corporation could qualify under section 341(e)(3) for use of section 333 since the apartment house would not be a subsection (e) asset.

Example (4). (i) Assume the same facts as in *Example (1),* except that in the hands of no shareholder of the corporation would the apartment house be deemed property held primarily for sale to customers in the ordinary course of trade or business (such determination, however, having been made without regard to A's ownership of stock of related corporations). Assume further that (*a*) X Corporation adopts a plan of complete liquidation, (*b*) within the 12-month period beginning on the date of such adoption X Corporation sells substantially all the property held by it on such date and distributes all its assets in complete liquidation, (*c*) following the adoption of such plan, no distribution is made of any property which in the hands of the corporation or in the hands of the distributee is property in respect of which a deduction for exhaustion, wear and tear, obsolescence, amortization, or depletion is allowable, and (*d*) following the adoption of such plan no property is sold or exchanged to A, to a constructive owner of A's stock, or to a person ''related'' (within the meaning of paragraph (k) of this section) to A or such constructive owner.

(ii) Since, under the above-stated facts, the requirements of section 341(e)(4) are satisfied, section 337(a) will apply to sales or exchanges of property by the corporation within the 12-month period beginning on the date of the adoption of the plan of liquidation.

(iii) Any distribution in complete liquidation to B and C, who own 15 and 10 percent, respectively, in value of the outstanding stock, will qualify under section 341(e)(2) because (*a*) by reason of the application of section 341(e)(4), section 337(a) applies to sales or exchanges of property by the corporation, and (*b*) at all times within the 12-month period beginning on the date of the adoption of the plan of complete liquidation the general corporate test is satisfied and B and C each satisfy the specific shareholder test of paragraph (e)(1)(iii)(*a*) of this section.

(iv) Any distribution in complete liquidation to A, who owns 75 percent in value of the outstanding stock, will qualify under section 341(e)(2) if, at all times within the 12-month period beginning on the date of the adoption of the plan of complete liquidation, and after taking into account A's ownership of stock in related corporations in the manner prescribed in paragraph (d) of this section, A satisfies the specific shareholder test of paragraph (e)(1)(iii)(*b*) of this section.

[T.D. 6806, 30 FR 2845, Mar. 5, 1965, as amended by T.D. 7369, 40 FR 29840, July 16, 1975; T.D. 7418, 41 FR 18811, May 7, 1976; T.D. 7728, 45 FR 72650, Nov. 3, 1980; T.D. 8586, 60 FR 2500, Jan. 10, 1995]

§ 1.341–7 Certain sales of stock of consenting corporations.

(a) *In general.* (1) Under section 341(f)(1), if a corporation consents (in the manner provided in paragraph (b) of this section) to the application of section 341(f)(2) with respect to dispositions by it of its subsection (f) assets (as defined in paragraph (g) of this section), then section 341(a)(1) does not apply to any sales of stock of such consenting corporation (other than sale to such corporation) made by any of its shareholders within the 6-month period beginning on the date on which such consent is filed.

(2) For purposes of section 341(f)(1) and (5)—(i) The term *sale* means a sale of exchange of stock at a gain, but only if such gain would be recognized as long-term capital gain were section 341 not a part of the Code. Thus, a sale or exchange of stock is not a ''sale'' within the meaning of section 341(f)(1) and (5) if there is no gain on the transaction, or if the sale or exchange gives rise to ordinary income under a provision of the Code other than section 341, or if gain on the transaction is not recognized under any provisions of subtitle A of the Code.

(ii) A sale of stock in a corporation does not include any disposition of such stock by a shareholder, if, by reason of section 341(d)(1), section 341(a) could not have applied to that disposition. (Under section 341(d)(1), section 341(a) does not apply except to more–than–5–percent shareholders.) Except as otherwise provided in paragraph (a)(2)(i) of this section, the term ''sale'' included a disposition of stock in a corporation by a more-than-5-percent shareholders described in section 341(d)(1), even though section 341(a) did not apply to the disposition because the corporation was not collapsible or by reason of the application of section 341(d)(2), (3), or (e).

(3) A corporation which consents to the application of section 341(f)(2) does not thereby become noncollapsible, and the fact that a corporation consents to the application of section 341(f)(2) does not affect the determination as to whether it is a collapsible corporation.

(4) For limitation on the application of section 341(f)(1) see section 341(f)(5) and (6) and paragraphs (h) and (j) of this section.

(b) *Statement of consent.* (1) The consent of a corporation referred to in paragraph (a)(1) or (j)(1) of this section shall be given by means of a statement, signed by any officer who is duly authorized to act on behalf of the consenting corporation stating that the corporation consents to have the provisions of section 341(f)(2) apply to any disposition by it of its subsection (f) assets. The statement shall be filed with the district director having jurisdiction over the income tax return of the consenting corporation for the taxable year during which the statement is filed.

(2)(i) The statement shall contain the name, address, and employer identification number of any corporation 5 percent or more in value of the outstanding stock of which is owned directly by the consenting corporation, and of any other corporation connected to the consenting corporation through a chain of stock ownership described in paragraph (j)(4) of this section. The statement shall also indicate where such 5-percent-or-more corporation (or such ''connected'' corporation) has consented within the 6-month period ending on the date on which the statement filed to the application of section 341 (f)(2) with respect to any dispositions of its subsection (f) assets (see paragraph (j) of this section), and, if so, the district director with whom such consent was filed and the date on which such consent was filed.

(ii) If, during the 6-month period beginning on the date on which the statement is filed, the consenting corporation becomes the owner of 5 percent or more in value of the outstanding stock of another corporation or becomes connected to another corporation through a chain of stock ownership described in paragraph (j)(4) of this section, then the consenting corporation shall, within 5 days after such occurrence, notify the district director with whom it filed the statement of the name, address and employer identification number of such corporation.

(3) A consent under section 341(f)(1) may be filed at any time and there is no limit as to the number of such consents that may be filed. If a consent is

filed by a corporation under section 341(f)(1) and if a shareholder sells stock (i) in such corporation, or (ii) in another corporation a sale of whose stock is treated under section 341(f)(6) as a sale of stock in such corporation, at any time during the applicable 6-month period, then the consent cannot thereafter be revoked or withdrawn by the corporation. However, a consent may be revoked or withdrawn at any time prior to a sale during the applicable 6-month period. If no sale is made during such period, the consent will have no effect on the corporation. See paragraph (g) of this section.

(c) *Consenting corporation.* (1) A consenting corporation at the time that is filed a consent under section 341(f)(10) shall notify its shareholders that such consent is being filed. In addition, the consenting corporation shall, at the request of any shareholder, promptly supply the shareholder with a copy of the consent.

(2) A consenting corporation shall maintain records adequate to permit identification of its subsection (F) assets.

(d) *Shareholders of consenting corporation.* (1) A shareholder who sells stock in a consenting corporation within the 6-month period beginning on the date on which the consent is filed shall—

(i) Notify the corporation, within 5 days after such sale, of the date on which such sale is made, and

(ii) Attach a copy of the corporation's consent to the shareholder's income tax return for the taxable year in which the sale is made.

(2) If the sale of stock in a consenting corporation is treated under section 341(f)(6) as the sale of stock in any other corporation, the consenting corporation shall notify such other corporation, within 5 days after receiving notification of a sale of its stock, of the date on which such sale was made.

(e) *Recognition of gain under section 341(f)(2).* (1) Under section 341(f)(2), if a subsection (f) asset (as defined in paragraph (g) of this section) is disposed of any time by a consenting corporation, then, except as provided in section 341(f)(3) and paragraph (f) of this section, the amount by which—

(i) The amount realized (in the case of a sale, exchange, or involuntary conversion), or

(ii) The fair market value of such asset (in the case of any other disposition), exceeds the adjusted base of such asset is treated as gain from the sale of exchange of such asset. Such gain is recognized notwithstanding any contrary non-recognition provisions of subtitle A of the Code, but only to the extent such gain is not recognized under any other provisions of subtitle A of the Code (for example, section 1245 (a)(1) or 1250(a)). Gain recognized under section 341(f)(2) with respect to a disposition of a subsection (f) asset has the same character (i.e., ordinary income or capital gain) that such gain would have if it arose from a sale of such asset.

(2) The nonrecognition provisions of subtitle A of the Code which section 341(f)(2) override include, but are not limited to, sections 311(a), 332(c), 336, 337, 351, 361, 371(a), 374(a), 721, 1031, 1033, 1071, and 1081.

(3) In the case of a foreign corporation which files a statement of consent pursuant to paragraph (b) of this section, such statement, in addition to the information required in paragraph (b) of this section, shall also contain a declaration that the corporation consents that any gain upon the disposition of a subsection (f) asset which would otherwise be recognized under section 341(f)(2) will, for purposes of section 882(a)(2), be considered as gross income which is effectively connected with the conduct of a trade or business which is conducted through a permanent establishment within the United States.

(4) The provisions of subparagraphs (1) and (2) of this paragraph may be illustrated by the following examples:

Example (1). Corporation X, a consenting corporation, distributes a subsection (f) asset to its shareholders in complete or partial liquidation of the corporation. The asset, at the line of the distribution, is held by the corporation primarily for sale to customers in the ordinary course of business and has an adjusted basis of $1,000 and a fair market value of $2,000. Under section 341(f)(2), the excess of the fair market value of the asset over its adjusted basis, or $1,000 is treated as ordinary income. Assuming the gain is not recognized by corporation X under another

provision of the Code, corporation X recognizes the $1,000 gain as ordinary income under section 341(f)(2) even though, in the absence of section 341(f)(2), section 336 would preclude the recognition of such gain.

Example (2). Corporation Y, a consenting corporation, distributes a subsection (f) asset to its shareholders as a dividend. The asset at the time of the distribution is properly described in section 1231 and has an adjusted basis of $6,000 and a fair market value of $8,000. Assuming that no other section of the Code would require recognition of gain, under section 341(f)(2) the excess of the fair market value of the asset over its adjusted basis, or $2,000, is recognized by corporation Y as gain from the sale or exchange of property described in section 1231 even though, in the absence of section 341(f)(2), section 311(a) would preclude the recognition of such gain.

Example (3). Assume the same facts as in *Example (2)* except that the subsection (f) asset is section 1245 property having a ''recomputed basis'' (as defined in section 1245(a)(2)) or $7,200. Since the recomputed basis of the asset is lower than its fair market value, the excess of the recomputed basis over the adjusted basis, or $1,200, is recognized as ordinary income under section 1245(a)(1). The remaining amount, or $800, is recognized under section 341(f)(2) as gain from the sale or exchange or property described in section 1231.

(5) The provisions of section 341(f)(2) apply whether or not (i) on the date on which a consent is filed or at any time thereafter, the consenting corporation was in fact a collapsible corporation within the meaning of section 341(b), or (ii) on the date of any sale of stock of the consenting corporation, the purchaser of such stock was aware that a consent had been filed under section 341(f)(1) within the 6-month period ending on the date of such sale.

(6) Section 341(f)(2) does not apply to losses. Thus, section 341(f)(2) does not apply if a loss is realized upon a sale, exahnger or involuntary conversion of a subsection (f) asset nor does the section appy to a disposition other than by way of sale, exchange, or involuntary conversion if at the time of the disposition the fair market value of such property is not greater than its adjusted basis.

(7) For purposes of this paragraph, the term ''disposition'' includes an abandonment or retirement, a gift, a sale in a sale-and-leasback transaction, and a transfer upon the foreclosure of a security interest. Such term, however, does not include a mere transfer of title to a creditor upon creation of a security interest or to a debtor upon termination of a security interest. Thus, for example, a disposition occurs upon a sale of property prusuant to a conditional sales contract even though the seller retains legal title to the propoerty for purposes of security, but a disposition does not occur when the seller ultimately gives up his security interest following payment by the purchaser.

(8) The amount of gain required to be recognized by section 341(f)(2) shall be determined separately for each subsection (f) asset disposed of by the corporation. For purposes of applying section 341(f)(2), the facts and circumstances of each disposition shall be considered in determining whether the transactions involves more than one subsection (f) asset or involves both subsection (f) and nonsubsection (f) assets. In appropriate cases, several subsection (f) assets may be treated as a single asset as long as it is reasonably clear, from the best estimates obtainable on the basis of all the facts and circumstances, that the amount of gain required to be recognized by section 341(f)(2) is not less than the total gain under section 341(f)(2) whish would be computed separately for each subsection (f) asset.

(9) In the case of a sale, exchange, or involuntary conversion of a subsection (f) asset and a nonsubsection (f) asset in one transaction, the total amount realized upon the disposition shall be allocated between the subsection (f) asset any arm's length agreement between the buyer and the seller will establish the allocation. In the absence of such an agreement, the allocation shall be made by taking into account the appropriate facts and circumstances. Some of the facts and circumstances which shall be taken into account to the extent appropriate included, but are not limited to, a comparision between the subsection (f) asset and all property disposed of in such transaction of (i) the original costs and reproduction costs of construction, erection, or production, (ii) the remaining economic useful life, (ii)

state of obsolencence, and (iv) anticipated expenditures to maintain, renovate, or modernize.

(10) See § 1.1502–13 for the treatment of gain recognized upon a distribution other than in complete liquidation made by one member of a group which files a consolidated return to another such members.

(f) *Exception for certain tax-free transactions.* (1) Under section 341(f)(3), no gain is taken into account under section 341(f)(2) by a transferor corporation on the transfer of a subsection (f) asset to another corporation (other than a corporation exempt from tax imposed by chapter 1 of the Code) if—

(i) The basis of such asset in the hands of the transferee corporation is determined by reference to its basis in the hands of the transferor by reason of the application of section 332 (relating to distributions in liquidation of an 80–percent-or-more controlled subsidairy corporation), section 351 (relating to transfers to a corporation controlled by the transferor), section 361 (relating to exchanges pursuant to certain reorganizations), section 371(a) (relating to exchanges pursuant to certain receivership and bankruptcy proceedings), or section 374 (a) (relating to exchanges pursuant to certain railroad reorganizations), and

(ii) The transferee corporation agrees (as provided in subparagraph (3) of this paragraph) to have the provisiions of section 341(f)(2) apply to any disposition by it of such asset.

(2) The provisions of subparagraph (1) of this paragraph may be illustrated by the following examples:

Example (1). Corporation M. in exchange for its voting stock worth $20,000 and $1,000 in cash, acquires the entire property of corporation N (an unencumbered apartment building) in a transaction which is described in section 368(a)(2)(B) and which, therefore, qualifies as a reorganization under section 368(a)(1)(C). The apartment building, which in the hands of corporation N. a consenting corporation, is a subsection (f) asset, has an adjusted basis of $15,000 and a fair market value of $21,000. The basis of the apartment house in the hands of corporation M is determined by reference to its basis in the hands of corporation N by reason of the application of section 361. Thus, under section 341(f)(3), if corporation M agrees to have the provisions of section 341(f)(2) apply to any disposition by it of the apartment house, then corporation N will recognize no gain under section 341(f)(2) but will recognize $1,000 gain under section 361(b) (assuming the cash it receives is not distributed in pursuance of the plan of reorganization). However, if corporation M does not so agree, the gain recognized by corporation N will be $6,000, that is, the gain of $1,000 recognized under section 361(b) plus $5,000 gain recognized under section 341(f)(2). In either case, if section 1245, 1250, or 1251 applies, some or all of the gain may be recognized under sections in lieu of sections 341(f)(2) and 361(b).

Example (2). Corporation Y, a consenting corporation, is a wholly owned subsidiary of corporation X. In the complete liquidation of Y it distributes to X a subsection (f) asset which is section 1245 property. The asset at the time of the distribution has an adjusted basis of $10,000, a recomputed basis of $14,000, and a fair market value of $10,000. The basis of the asset in the hands of X is determined by reference to its basis in the hands of corporation Y by reason of the application of section 332. Thus, under section 341(f)(3), if corporation X agrees to have the provisions of section 341(f)(2) apply to any disposition by it of the subsection (f) asset, then Y will recognize no gain under section 341(f)(2) and will recognize no gain under section 1245(a)(1) by reason of the application of section 1245(b)(3). Under section 334(b)(1), the basis of the subsection (f) asset to corporation X will be the same as it would be in the hands of Y, or $10,000. However, if corporation X does not so agree, then under section 341(f)(2) $6,000 (the excess of the fair market value of the asset over its adjusted basis) will be treated as gain from the sale or exchange of the asset. Moreover, under section 1245(a)(1) $4,000 (the excess of the recomputed basis over the adjusted basis) of the $6,000 will be recognized as ordinary income. The basis of the asset to corporation X is $16,000, i.e., the same as it would be in the hands of Y ($10,000) increased in the amount of gain recognized by Y on the distribution ($6,000).

(3) The agreement of a transferee corporation referred to in subparagraph (1) of this paragraph shall be filed, on or before the date on which the subsection (f) assets are transferred, with the district director having jurisdiction over its income tax return for the taxable year during which the transfer is to be made. The agreement shall be signed by any officer who is duly authorized to act on behalf of the transferee corporation (if the transaxtion is one to which section 371(a) or 374(a) applies, the fiduciary for the transferee corporation, in appropriate cases, may sign the agreement) and shall apply to

all the subsection (f) assets to be transferred pursuant to the applicable transaction described in section 341(f)(3). The agreement shall identify the transaction by which the subsection (f) assets will be acquired, including the names, addresses, and employer identification numbers of the transferor and transferee corporations, and shall contain a schedule of the subsection (f) assets to be acquired. The agreement shall also state that the transferee corporation (i) agrees to have the provisions of section 341(f)(2) apply to any disposition by it of the subsection (f) assets acquired, and (ii) agrees to maintain records adequate to permit identification of such subsection (f) assets.

(4) The transferor corporation shall attach a copy of the agreement to its income tax return for the taxable year in which the subsection (f) assets are transferred.

(g) *Subsection (f) asset defined.* (1) Under section 341(f)(4), a subsection (f) asset is any property which, as of the date of any sale of stock to which paragraph (a) or (j)(3) of this section applies, is not a capital asset and is property owned by, or subject to a binding contract or an option to acquire held by, the consenting corporation. Land or any interest in real property (other than a security interest) is treated as property which is not a capital asset. Also, unrealized receivables or fees (as defined in section 341(b)(4)) are treated as property which are not capital assets.

(2) If, with respect to any property described in subparagraph (1) of this paragraph, manufacture, construction, or production has been commenced by either the consenting corporation or another person before any date of sale of stock described in subparagraph (1) of this paragraph, a consenting corporation's subsection (f) assets include any property resulting from such manufacture, construction, or production. Thus, for example, if, on the date of any sale of stock within the 6-month period, manufacture, construction, or production has been commended on a tract of land to be used for residential housing or on a television series, the term ''subsection (f) asset'' includes the residential homes of the television tapes resulting from such manufacture, construction, or production by the consenting corporation (or by a transferee corporation which has agreed to the application of section 341(f)(2)). If land or any interest in real property (other than a security interest) is owned or held under an option by the consenting corporation on the date of any sale of stock described in subparagraph (1) of this paragraph, the term ''subsection (f) asset'' includes any improvements resulting from construction with respect to such property (by the consenting corporation or by a transferee corporation which has agreed to the application of section 341(f)(2)) if such construction is commenced within 2 years after the date of any such sale. The property or improvements resulting from any manufacture, construction, or production is a question to be determined on the basis of the particular facts and circumstances of each individual case. Thus, for example, a building which is a part of an integrated project is a subsection (f) asset if construction of the project commenced before the date of sale or within 2 years thereafter even if construction of the building commenced more than 2 years thereafter. Similarly a television tape which is part of a series is a subsection (i) asset if production of the series was commenced on the date of sale even if production of the tape commenced after the sale.

(3) The provisions of subparagraphs (1) and (2) of this paragraph may be illustrated by the following examples:

Example (1). Corporation X files a consent to the application of section 341(f)(2) on January 1, 1985. Shareholder A owns 100 percent of the outstanding stock of the consenting corporation on January 1, 1965, and sells 5 percent of the stock on January 2, 1965, 10 percent on February 10, 1963, and 1 percent on May 1, 1965. No other sales of X stock were made during the 6-month period beginning on January 1, 1965. On such date X owns an apartment building and on March 1 X purchases an office building. X's subsection (f) assets include the apartment building owned on January 1 and the office building purchased on March 1.

Example (2). Assume the same facts as in *Example (1)* except that on January 1, 1965, X also owns a tract of raw land. On April 1, 1965, construction of a residential housing project is commenced on the tract of land.

Corporation X's subsection (i) assets will include the tract of land plus the resulting improvements to the land. This result would not be changed if construction of the residential housing project were not commenced until July 1, 1966, since the construction would have been commenced within 2 years after May 1, 1965.

Example (3). Corporation X files a consent to the application of section 341(f)(2) on January 1, 1965. Shareholder B owns 100 percent of the outstanding stock of the consenting corporation on January 1, 1965, and sells 10 percent of the stock on June 1, 1965. On April 1, 1965, Y acquires an option to purchase a motion picture when completed. On May 1, 1965, production is started on the motion picture. On February 1, 1967, production is completed, and Y exercises its option. Y holds the option and the motion picture for use in its trade or business. Y's subsection (f) assets initially include the option and ultimately include the motion picture. However the exercise of the option is not a disposition of the option within the meaning of section 341(f)(2).

(h) *Five-year limitation as to shareholder.* Under section 341(f)(5), section 341(f)(1) does not apply to the sale of stock of a consenting corporation if, during the 5-year period ending on the date of such sale, such shareholder (or any person related to such shareholder within the meaning of section 341(e)(8)(A)) made a sale (as defined in paragraph (a)(2) of this section) of any stock of another consenting corporation within any 6-month period beginning on a date on which a consent was filed under section 341(f)(1) by such other corporation. Section 341(f)(5) does not prevent a shareholder of a consenting corporation from receiving the benefit of section 341(f)(1) on the sale of additional shares of the stock of the same consenting corporation.

(i) [Reserved]

(j) *Special rule for stock ownership in other corporations*—(1) Section 341(f)(6) provides a special rule applicable to a consenting corporation which owns 5 percent or more in value of the outstanding stock of another corporation. In such a case, a consent filed by the consenting corporation shall not be valid with respect to a sale of its stock during the applicable 6-month period unless each corporation, 5 percent or more in value of the outstanding stock of which is owned by the consenting corporation on the date of such sale, file (within the 6-month period ending on the date of such sale) a valid consent under section 341(f)(1) with respect to sales of its own stock.

(2) The provisions of subparagraph (1) of this paragraph may be illustrated by the following example:

Example: Corporation X files a consent under section 341(f)(1) on November 1, 1965. On January 1, 1966, the date on which a shareholder of corporation X sells stock of X. X owns 80 percent in value of the outstanding stock of corporation Y. In order for the consent filed by corporation X to be valid with respect to the sale of its stock on January 1, 1966, corporation Y must have filed, during the 6-month period ending on January 1, 1966, a valid consent under section 341(f)(1) with respect to sales of its stock.

(3) For purposes of applying section 341(f)(4) (relating to the definition of a subsection (f) asset) to a corporation 5 percent or more in value of the outstanding stock of which is owned by the consenting corporation, a sale of stock of the consenting corporation to which section 341(f)(1) applies shall be treated as a sale of stock of such other corporation. Thus, in the example in subparagraph (2) of this paragraph, the subsection (f) assets of corporation Y would include property described in section 341(f)(4) owned by or held under an option by corporation Y on January 1, 1966.

(4) In the case of a chain of corporations connected by the 5-percent ownership requirement described in subparagraph (1) of this paragraph, rules similar to the rules described in subparagraphs (2) and (3) of this paragraph shall apply. Thus, in the example in subparagraph (2) of this paragraph, if corporation Y owned 5 percent or more of the stock of corporation Z on January 1, 1966, then Z must have filed a valid consent during the 6-month period ending January 1, 1966, in order for the consent filed by X to be valid with respect to the sale of its stock on January 1, 1966. In such case any of stock of either X or Y is treated as a sale of stock of Z for purposes of applying section 341(f)(4) to Z.

(5) If a corporation is a member of an affiliated group (as defined in section 1504(a)) that files a consolidated return, a corporation will be considered to have filed a consent if a consent is filed on its behalf by the common parent under § 1.1502–77(a).

(k) *Effective date.* Paragraphs (b), (c), (e)(3), and (f)(3) of this section apply only with respect to statements and notifications filed more than 30 days after July 6, 1977. Paragraph (d) applies only with respect to sales of stock made more than 30 days after July 6, 1977. All other provisions of this section appy with respect to transactions after August 22, 1964.

[T.D. 7655, 44 FR 68460, Nov. 29, 1979; 45 FR 17982, Mar. 20, 1980; 45 FR 20464, Mar. 28, 1980; T.D. 8597, 60 FR 36679, July 18, 1995]

§ 1.342–1 General.

The determination of whether a foreign corporation was a foreign personal holding company with respect to a taxable year beginning on or before, and ending after August 26, 1937, shall be made under section 331 of the Revenue Act of 1936 (50 Stat. 818) and the regulations thereunder. For the purpose of section 342(a), a liquidation may be completed before the actual dissolution of the liquidating corporation. However, no liquidation shall be considered as completed until the liquidating corporation and the receiver (or trustees in liquidation) are finally divested of all the property, whether tangible or intangible.

DEFINITION

§ 1.346–1 Partial liquidation.

(a) *General.* This section defines a partial liquidation. If amounts are distributed in partial liquidation such amounts are treated under section 331(a)(2) as received in part or full payment in exchange for the stock. A distribution is treated as in partial liquidation of a corporation if:

(1) The distribution is one of a series of distributions in redemption of all of the stock of the corporation pursuant to a plan of complete liquidation, or

(2) The distribution:

(i) Is not essentially equivalent to a dividend,

(ii) Is in redemption of a part of the stock of the corporation pursuant to a plan, and

(iii) Occurs within the taxable year in which the plan is adopted or within the succeeding taxable year.

An example of a distribution which will qualify as a partial liquidation under subparagraph (2) of this paragraph and section 346(a) is a distribution resulting from a genuine contraction of the corporate business such as the distribution of unused insurance proceeds recovered as a result of a fire which destroyed part of the business causing a cessation of a part of its activities. On the other hand, the distribution of funds attributable to a reserve for an expansion program which has been abandoned does not qualify as a partial liquidation within the meaning of section 346(a). A distribution to which section 355 applies (or so much of section 356 as relates to section 355) is not a distribution in partial liquidation within the meaning of section 346(a).

(b) *Special requirements on termination of business.* A distribution which occurs within the taxable year in which the plan is adopted or within the succeeding taxable year and which meets the requirements of subsection (b) of section 346 falls within paragraph (a)(2) of this section and within section 346(a)(2). The requirements which a distribution must meet to fall within subsection (b) of section 346 are:

(1) Such distribution is attributable to the corporation's ceasing to conduct, or consists of assets of, a trade or business which has been actively conducted throughout the five-year period immediately before the distribution, which trade or business was not acquired by the corporation within such period in a transaction in which gain or loss was recognized in whole or in part, and

(2) Immediately after such distribution by the corporation it is actively engaged in the conduct of a trade or business, which trade or business was actively conducted throughout the five-year period ending on the date of such distribution and was not acquired by the corporation within such period in a transaction in which gain or loss was recognized in whole or in part.

A distribution shall be treated as having been made in partial liquidation pursuant to section 346(b) if it consists of the proceeds of the sale of the assets of a trade or business which has been actively conducted for the five-year period and has been terminated, or if it is a distribution in kind of the assets of

such a business, or if it is a distribution in kind of some of the assets of such a business and of the proceeds of the sale of the remainder of the assets of such a business. In general, a distribution which will qualify under section 346(b) may consist of, but is not limited to:

(i) Assets (other than inventory or property described in subdivision (ii) of this subparagraph) used in the trade or business throughout the five-year period immediately before the distribution (for this purpose an asset shall be considered used in the trade or business during the period of time the asset which it replaced was so used), or

(ii) Proceeds from the sale of assets described in subdivision (i) of this subparagraph, and, in addition,

(iii) The inventory of such trade or business or property held primarily for sale to customers in the ordinary course of business, if:

(*a*) The items constituting such inventory or such property were substantially similar to the items constituting such inventory or property during the five-year period immediately before the distribution, and

(*b*) The quantity of such items on the date of distribution was not substantially in excess of the quantity of similar items regularly on hand in the conduct of such business during such five-year period, or

(iv) Proceeds from the sale of inventory or property described in subdivision (iii) of this subparagraph, if such inventory or property is sold in bulk in the course of termination of such trade or business and if with respect to such inventory the conditions of subdivision (iii)(*a*) and (*b*) of this subparagraph would have been met had such inventory or property been distributed on the date of such sale.

(c) *Active conduct of a trade or business.* For the purpose of section 346(b)(1), a corporation shall be deemed to have actively conducted a trade or business immediately before the distribution, if:

(1) In the case of a business the assets of which have been distributed in kind, the business was operated by such corporation until the date of distribution, or

(2) In the case of a business the proceeds of the sale of the assets of which are distributed, such business was actively conducted until the date of sale and the proceeds of such sale were distributed as soon thereafter as reasonably possible.

The term *active conduct of a trade or business* shall have the same meaning in this section as in paragraph (c) of § 1.355–1.

§ 1.346–2 Treatment of certain redemptions.

If a distribution in a redemption of stock qualifies as a distribution in part or full payment in exchange for the stock under both section 302(a) and this section, then only this section shall be applicable. None of the limitations of section 302 shall be applicable to such redemption.

§ 1.346–3 Effect of certain sales.

The determination of whether assets sold in connection with a partial liquidation are sold by the distributing corporation or by the shareholder is a question of fact to be determined under the facts and circumstances of each case.

CORPORATE ORGANIZATIONS AND REORGANIZATIONS

CORPORATE ORGANIZATIONS

§ 1.351–1 Transfer to corporation controlled by transferor.

(a)(1) Section 351(a) provides, in general, for the nonrecognition of gain or loss upon the transfer by one or more persons of property to a corporation solely in exchange for stock or securities in such corporation, if immediately after the exchange, such person or persons are in control of the corporation to which the property was transferred. As used in section 351, the phrase ''one or more persons'' includes individuals, trusts, estates, partnerships, associations, companies, or corporations (see section 7701(a)(1)). To be in control of the transferee corporation, such person or persons must own immediately after the transfer stock possessing at least 80 percent of the total combined voting power of all classes of stock entitled to vote and at

least 80 percent of the total number of shares of all other classes of stock of such corporation (see section 368(c)). In determining control under this section, the fact that any corporate transferor distributes part or all of the stock which it receives in the exchange to its shareholders shall not be taken into account. The phrase ''immediately after the exchange'' does not necessarily require simultaneous exchanges by two or more persons, but comprehends a situation where the rights of the parties have been previously defined and the execution of the agreement proceeds with an expedition consistent with orderly procedure. For purposes of this section—

(i) Stock or securities issued for services rendered or to be rendered to or for the benefit of the issuing corporation will not be treated as having been issued in return for property, and

(ii) Stock or securities issued for property which is of relatively small value in comparison to the value of the stock and securities already owned (or to be received for services) by the person who transferred such property, shall not be treated as having been issued in return for property if the primary purpose of the transfer is to qualify under this section the exchanges of property by other persons transferring property.

For the purpose of section 351, stock rights or stock warrants are not included in the term ''stock or securities.''

(2) The application of section 351(a) is illustrated by the following examples:

Example (1). C owns a patent right worth $25,000 and D owns a manufacturing plant worth $75,000. C and D organize the R Corporation with an authorized capital stock of $100,000. C transfers his patent right to the R Corporation for $25,000 of its stock and D transfers his plant to the new corporation for $75,000 of its stock. No gain or loss to C or D is recognized.

Example (2). B owns certain real estate which cost him $50,000 in 1930, but which has a fair market value of $200,000 in 1955. He transfers the property to the N Corporation in 1955 for 78 percent of each class of stock of the corporation having a fair market value of $200,000, the remaining 22 percent of the stock of the corporation having been issued by the corporation in 1940 to other persons for cash. B realized a taxable gain of $150,000 on this transaction.

Example (3). E, an individual, owns property with a basis of $10,000 but which has a fair market value of $18,000. E also had rendered services valued at $2,000 to Corporation F. Corporation F has outstanding 100 shares of common stock all of which are held by G. Corporation F issues 400 shares of its common stock (having a fair market value of $20,000) to E in exchange for his property worth $18,000 and in compensation for the services he has rendered worth $2,000. Since immediately after the transaction, E owns 80 percent of the outstanding stock of Corporation F, no gain is recognized upon the exchange of the property for the stock. However, E realized $2,000 of ordinary income as compensation for services rendered to Corporation F.

(3) *Underwritings of stock*—(i) *In general.* For the purpose of section 351, if a person acquires stock of a corporation from an underwriter in exchange for cash in a qualified underwriting transaction, the person who acquires stock from the underwriter is treated as transferring cash directly to the corporation in exchange for stock of the corporation and the underwriter is disregarded. A qualified underwriting transaction is a transaction in which a corporation issues stock for cash in an underwriting in which either the underwriter is an agent of the corporation or the underwriter's ownership of the stock is transitory.

(ii) *Effective date.* This paragraph (a)(3) is effective for qualified underwriting transactions occurring on or after May 1, 1996.

(b)(1) Where property is transferred to a corporation by two or more persons in exchange for stock or securities, as described in paragraph (a) of this section, it is not required that the stock and securities received by each be substantially in proportion to his interest in the property immediately prior to the transfer. However, where the stock and securities received are received in disproportion to such interest, the entire transaction will be given tax effect in accordance with its true nature, and in appropriate cases the transaction may be treated as if the stock and securities had first been received in proportion and then some of such stock and securities had been used to make gifts (section 2501 and following), to pay compensation (section 61(a)(1)), or to satisfy obligations of the transferor of any kind.

(2) The application of paragraph (b)(1) of this section may be illustrated as follows:

Example (1). Individuals A and B, father and son, organize a corporation with 100 shares of common stock to which A transfers property worth $8,000 in exchange for 20 shares of stock, and B transfers property worth $2,000 in exchange for 80 shares of stock. No gain or loss will be recognized under section 351. However, if it is determined that A in fact made a gift to B, such gift will be subject to tax under section 2501 and following. Similarly, if B had rendered services to A (such services having no relation to the assets transferred or to the business of the corporation) and the disproportion in the amount of stock received constituted the payment of compensation by A to B, B will be taxable upon the fair market value of the 60 shares of stock received as compensation for services rendered, and A will realize gain or loss upon the difference between the basis to him of the 60 shares and their fair market value at the time of the exchange.

Example (2). Individuals C and D each transferred, to a newly organized corporation, property having a fair market value of $4,500 in exchange for the issuance by the corporation of 45 shares of its capital stock to each transferor. At the same time, the corporation issued to E, an individual, 10 shares of its capital stock in payment for organizational and promotional services rendered by E for the benefit of the corporation. E transferred no property to the corporation. C and D were under no obligation to pay for E's services. No gain or loss is recognized to C or D. E received compensation taxable as ordinary income to the extent of the fair market value of the 10 shares of stock received by him.

(c)(1) The general rule of section 351 does not apply, and consequently gain or loss will be recognized, where property is transferred to an investment company after June 30, 1967. A transfer of property after June 30, 1967, will be considered to be a transfer to an investment company if—

(i) The transfer results, directly or indirectly, in diversification of the transferors' interests, and

(ii) The transferee is (*a*) a regulated investment company, (*b*) a real estate investment trust, or (*c*) a corporation more than 80 percent of the value of whose assets (excluding cash and nonconvertible debt obligations from consideration) are held for investment and are readily marketable stocks or securities, or interests in regulated investment companies or real estate investment trusts.

(2) The determination of whether a corporation is an investment company shall ordinarily be made by reference to the circumstances in existence immediately after the transfer in question. However, where circumstances change thereafter pursuant to a plan in existence at the time of the transfer, this determination shall be made by reference to the later circumstances.

(3) Stocks and securities will be considered readily marketable if (and only if) they are part of a class of stock or securities which is traded on a securities exchange or traded or quoted regularly in the over-the-counter market. For purposes of subparagraph (1)(ii)(*c*) of this paragraph, the term ''readily marketable stocks or securities'' includes convertible debentures, convertible preferred stock, warrants, and other stock rights if the stock for which they may be converted or exchanged is readily marketable. Stocks and securities will be considered to be held for investment unless they are (i) held primarily for sale to customers in the ordinary course of business, or (ii) used in the trade or business of banking, insurance, brokerage, or a similar trade or business.

(4) In making the determination required under subparagraph (1)(ii)(*c*) of this paragraph, stock and securities in subsidiary corporations shall be disregarded and the parent corporation shall be deemed to own its ratable share of its subsidiaries' assets. A corporation shall be considered a subsidiary if the parent owns 50 percent or more of (i) the combined voting power of all classes of stock entitled to vote, or (ii) the total value of shares of all classes of stock outstanding.

(5) A transfer ordinarily results in the diversification of the transferors' interests if two or more persons transfer nonidentical assets to a corporation in the exchange. For this purpose, if any transaction involves one or more transfers of nonidentical assets which, taken in the aggregate, constitute an insignificant portion of the total value of assets transfered, such transfers shall be disregarded in determining whether diversification has occurred. If there is only one transferor (or two or

more transferors of identical assets) to a newly organized corporation, the transfer will generally be treated as not resulting in diversification. If a transfer is part of a plan to achieve diversification without recognition of gain, such as a plan which contemplates a subsequent transfer, however delayed, of the corporate assets (or of the stock or securities received in the earlier exchange) to an investment company in a transaction purporting to qualify for nonrecognition treatment, the original transfer will be treated as resulting in diversification.

(6)(i) For purposes of paragraph (c)(5) of this section, a transfer of stocks and securities will not be treated as resulting in a diversification of the transferors' interests if each transferor transfers a diversified portfolio of stocks and securities. For purposes of this paragraph(c)(6), a portfolio of stocks and securities is diversified if it satisfies the 25 and 50-percent tests of section 368(a)(2)(F)(ii), applying the relevant provisions of section 368(a)(2)(F). However, Government securities are included in total assets for purposes of the denominator of the 25 and 50-percent tests (unless the Government securities are acquired to meet the 25 and 50-percent tests), but are not treated as securities of an issuer for purposes of the numerator of the 25 and 50-percent tests.

(ii) Paragraph (c)(6)(i) of this section is effective for transfers completed on or after May 2, 1996. Transfers of diversified (within the meaning of paragraph (c)(6)(i) of this section), but nonidentical, portfolios of stocks and securities completed before May 2, 1996, may be treated either—

(A) Consistent with paragraph (c)(6)(i) of this section; or

(B) As resulting in diversification of the transferors' interests.

(7) The application of subparagraph (5) of this paragraph may be illustrated as follows:

Example (1). Individuals A, B, and C organize a corporation with 101 shares of common stock. A and B each transfers to it $10,000 worth of the only class of stock of corporation X, listed on the New York Stock Exchange, in exchange for 50 shares of stock. C transfers $200 worth of readily marketable securities in corporation Y for one share of stock. In determining whether or not diversification has occurred, C's participation in the transaction will be disregarded. There is, therefore, no diversification, and gain or loss will not be recognized.

Example (2). A, together with 50 other transferors, organizes a corporation with 100 shares of stock. A transfers $10,000 worth of stock in corporation X, listed on the New York Stock Exchange, in exchange for 50 shares of stock. Each of the other 50 transferors transfers $200 worth of readily marketable securities in corporations other than X in exchange for one share of stock. In determining whether or not diversification has occurred, all transfers will be taken into account. Therefore, diversification is present, and gain or loss will be recognized.

[T.D. 6500, 25 FR 11607, Nov. 26, 1960, as amended by T.D. 6942, 32 FR 20977, Dec. 29, 1967; T.D. 8665, 61 FR 19189, May 1, 1996; T.D. 8663, 61 FR 19545, May 2, 1996]

§ 1.351–2 Receipt of property.

(a) If an exchange would be within the provisions of section 351(a) if it were not for the fact that the property received in exchange consists not only of property permitted by such subsection to be received without the recognition of gain, but also of other property or money, then the gain, if any, to the recipient shall be recognized, but in an amount not in excess of the sum of such money and the fair market value of such other property. No loss to the recipient shall be recognized.

(b) See section 357 and the regulations pertaining to that section for applicable rules as to the treatment of liabilities as ''other property'' in cases subject to section 351, where another party to the exchange assumes a liability, or acquires property subject to a liability.

(c) See sections 358 and 362 and the regulations pertaining to those sections for applicable rules with respect to the determination of the basis of stock, securities, or other property received in exchanges subject to section 351.

(d) See part I (section 301 and following), subchapter C, chapter 1 of the Code, and the regulations thereunder for applicable rules with respect to the taxation of dividends where a distribution by a corporation of its stock or securities in connection with an exchange subject to section 351(a) has the effect of the distribution of a taxable dividend.

§ 1.351–3 Records to be kept and information to be filed.

(a) Every person who received the stock or securities of a controlled corporation, or other property as part of the consideration, in exchange for property under section 351, shall file with his income tax return for the taxable year in which the exchange is consummated a complete statement of all facts pertinent to such exchange, including—

(1) A description of the property transferred, or of his interest in such property, together with a statement of the cost or other basis thereof, adjusted to the date of transfer.

(2) With respect to stock of the controlled corporation received in the exchange, a statement of—

(i) The kind of stock and preferences, if any;

(ii) The number of shares of each class received; and

(iii) The fair market value per share of each class at the date of the exchange.

(3) With respect to securities of the controlled corporation received in the exchange, a statement of—

(i) The principal amount and terms; and

(ii) The fair market value at the date of exchange.

(4) The amount of money received, if any.

(5) With respect to other property received—

(i) A complete description of each separate item;

(ii) The fair market value of each separate item at the date of exchanges; and

(iii) In the case of a corporate shareholder, the adjusted basis of the other property in the hands of the controlled corporation immediately before the distribution of such other property to the corporate shareholder in connection with the exchange.

(6) With respect to liabilities of the transferors assumed by the controlled corporation, a statement of—

(i) The nature of the liabilities;

(ii) When and under what circumstances created;

(iii) The corporate business reason for assumption by the controlled corporation; and

(iv) Whether such assumption eliminates the transferor's primary liability.

(b) Every such controlled corporation shall file with its income tax return for the taxable year in which the exchange is consummated—

(1) A complete description of all the property received from the transferors.

(2) A statement of the cost or other basis thereof in the hands of the transferors adjusted to the date of transfer.

(3) The following information with respect to the capital stock of the controlled corporation—

(i) The total issued and outstanding capital stock immediately prior to and immediately after the exchange, with a complete description of each class of stock;

(ii) The classes of stock and number of shares issued to each transferor in the exchange, and the number of shares of each class of stock owned by each transferor immediately prior to and immediately after the exchange, and

(iii) The fair market value of the capital stock as of the date of exchange which was issued to each transferor.

(4) The following information with respect to securities of the controlled corporation—

(i) The principal amount and terms of all securities outstanding immediately prior to and immediately after the exchange,

(ii) The principal amount and terms of securities issued to each transferor in the exchange, with a statement showing each transferor's holdings of securities of the controlled corporation immediately prior to and immediately after the exchange,

(iii) The fair market value of the securities issued to the transferors on the date of the exchange, and

(iv) A statement as to whether the securities issued in the exchange are subordinated in any way to other claims against the controlled corporation.

(5) The amount of money, if any, which passed to each of the transferors in connection with the transaction.

(6) With respect to other property which passed to each transferor—

(i) A complete description of each separate item;

(ii) The fair market value of each separate item at the date of exchange, and

(iii) In the case of a corporate transferor, the adjusted basis of each separate item in the hands of the controlled corporation immediately before the distribution of such other property to the corporate transferor in connection with the exchange.

(7) The following information as to the transferor's liabilities assumed by the controlled corporation in the exchange—

(i) The amount and a description thereof,

(ii) When and under what circumstances created, and

(iii) The corporate business reason or reasons for assumption by the controlled corporation.

(c) Permanent records in substantial form shall be kept by every taxpayer who participates in the type of exchange described in section 351, showing the information listed above, in order to facilitate the determination of gain or loss from a subsequent disposition of stock or securities and other property, if any, received in the exchange.

EFFECTS ON SHAREHOLDERS AND SECURITY HOLDERS

§ 1.354–1 Exchanges of stock and securities in certain reorganizations.

(a) Section 354 provides that under certain circumstances no gain or loss is recognized to a shareholder who surrenders his stock in exchange for other stock or to a security holder who surrenders his securities in exchange for stock. Section 354 also provides that under certain circumstances a security holder may surrender securities and receive securities in the same principal amount or in a lesser principal amount without the recognition of gain or loss to him. The exchanges to which section 354 applies must be pursuant to a plan of reorganization as provided in section 368(a) and the stock and securities surrendered as well as the stock and securities received must be those of a corporation which is a party to the reorganization. Section 354 does not apply to exchanges pursuant to a reorganization described in section 368(a)(1)(D) unless the transferor corporation—

(1) Transfers all or substantially all of its assets to a single corporation, and

(2) Distributes all of its remaining properties (if any) and the stock, securities and other properties received in the exchange to its shareholders or security holders in pursuance of the plan of reorganization. The fact that properties retained by the transferor corporation, or received in exchange for the properties transferred in the reorganization, are used to satisfy existing liabilities not represented by securities and which were incurred in the ordinary course of business before the reorganization does not prevent the application of section 354 to an exchange pursuant to a plan of reorganization defined in section 368(a)(1)(D).

(b) Except as provided in section 354 (c) and (d), section 354 is not applicable to an exchange of stock or securities if a greater principal amount of securities is received than the principal amount of securities the recipient surrenders, or if securities are received and the recipient surrenders no securities. See, however, section 356 and regulations pertaining to such section. See also section 306 with respect to the receipt of preferred stock in a transaction to which section 354 is applicable.

(c) An exchange of stock or securities shall be subject to section 354(a)(1) even though—

(1) Such exchange is not pursuant to a plan of reorganization described in section 368(a), and

(2) The principal amount of the securities received exceeds the principal amount of the securities surrendered or if securities are received and no securities are surrendered—

if such exchange is pursuant to a plan of reorganization for a railroad corporation as defined in section 77(m) of the Bankruptcy Act (11 U.S.C. 205(m)) and is approved by the Interstate Commerce Commission under section 77 of such act or under section 20b of the Interstate Commerce Act (49 U.S.C. 20b) as being in the public interest. Section 354 is not applicable to such exchanges if there is received property other than stock or securities. See,

however, section 356 and regulations pertaining to such section.

(d) The rules of section 354 may be illustrated by the following examples:

Example 1. Pursuant to a reorganization under section 368(a) to which Corporations T and W are parties, A, a shareholder in Corporation T, surrenders all his common stock in Corporation T in exchange for common stock of Corporation W. No gain or loss is recognized to A.

Example 2. Pursuant to a reorganization under section 368(a) to which Corporations X and Y (which are not railroad corporations) are parties, B, a shareholder in Corporation X, surrenders all his stock in X for stock and securities in Y. Section 354 does not apply to this exchange. See, however, section 356.

Example 3. C, a shareholder in Corporation Z (which is not a railroad corporation), surrenders all his stock in Corporation Z in exchange for securities in Corporation Z. Whether or not this exchange is in connection with a recapitalization under section 368(a)(1)(E), section 354 does not apply. See, however, section 302.

Example 4. The facts are the same as in *Example 3* of this paragraph (d), except that C receivies solely rights to acquire stock in Corporation Z. Section 354 does not apply.

(e) Except as provided in § 1.356–6T, for purposes of section 354, the term *securities* includes rights issued by a party to the reorganization to acquire its stock. For purposes of this section and section 356(d)(2)(B), a right to acquire stock has no principal amount. For this purpose, rights to acquire stock has the same meaning as it does under sections 305 and 317(a). Other Internal Revenue Code provisions governing the treatment of rights to acquire stock may also apply to certain exchanges occurring in connection with a reorganization. See, for example, sections 83 and 421 through 424 and the regulations thereunder. This paragraph (e) applies to exchanges occurring on or after March 9, 1998.

[T.D. 6500, 25 FR 11607, Nov. 26, 1960, as amended by T.D. 7616, 44 FR 26869, May 8, 1979; T.D. 8752, 63 FR 410, Jan. 6, 1998]

§ 1.355–0 In order to facilitate the use of §§ 1.355–1 through 1.355–6, this section lists the paragraphs, subparagraphs, and subdivisions in those sections.

§ 1.355–1 DISTRIBUTION OF STOCK AND SECURITIES OF A CONTROLLED CORPORATION.

(a) Effective date of certain sections.
(b) Application of section.

§ 1.355–2 LIMITATIONS.

(a) Property distributed.
(b) Independent business purpose.
(1) Independent business purpose requirement.
(2) Corporate business purpose.
(3) Business purpose for distribution.
(4) Business purpose as evidence of nondevice.
(5) Examples.
(c) Continuity of interest requirement.
(1) Requirement.
(2) Examples.
(d) Device for distribution of earnings and profits.
(1) In general.
(2) Device factors.
(i) In general.
(ii) Pro rata distribution.
(iii) Subsequent sale or exchange of stock.
(A) In general.
(B) Sale or exchange negotiated or agreed upon before the distribution.
(C) Sale or exchange not negotiated or agreed upon before the distribution.
(D) Negotiated or agreed upon before the distribution.
(E) Exchange in pursuance of a plan of reorganization.
(iv) Nature and use of assets.
(A) In general.
(B) Assets not used in a trade or business meeting the requirement of section 355(b).
(C) Related function.
(3) Nondevice factors.
(i) In general.
(ii) Corporate business purpose.
(iii) Distributing corporation publicly traded and widely held.
(iv) Distribution to domestic corporate shareholders.
(4) Examples.
(5) Transactions ordinarily not considered as a device.
(i) In general.
(ii) Absence of earnings and profits.
(iii) Section 303(a) transactions.
(iv) Section 302(a) transactions.
(v) Examples.
(e) Stock and securities distributed.
(1) In general.
(2) Additional rules.
(f) Principal amount of securities.
(1) Securities received.
(2) Only stock received.
(g) Period of ownership.
(1) Other property.
(2) Example.
(h) Active conduct of a trade or business.

§ 1.355–3 ACTIVE CONDUCT OF A TRADE OR BUSINESS.

(a) General requirements.
(1) Application of section 355.

(2) Examples.
(b) Active conduct of a trade or business defined.
(1) In general.
(2) Active conduct or a trade or business immediately after distribution.
(i) In general.
(ii) Trade or business.
(iii) Active conduct.
(iv) Limitations.
(3) Active conduct for five-year period preceding distribution.
(4) Special rules for acquisition of a trade or business (Prior to the Revenue Act of 1987 and Technical and Miscellaneous Revenue Act of 1988).
(i) In general.
(ii) Example.
(iii) Gain or loss recognized in certain transactions.
(iv) Affiliated group.
(5) Special rules for acquisition of a trade or business (After the Revenue Act of 1987 and Technical and Miscellaneous Revenue Act of 1988).
(c) Examples.

§1.355–4 NON PRO RATA DISTRIBUTIONS, ETC.

§1.355–5 RECORDS TO BE KEPT AND INFORMATION TO BE FILED.

§1.355–6 [RESERVED]

[T.D. 8238, 54 FR 289, Jan. 5, 1989]

§1.355–1 Distribution of stock and securities of a controlled corporation.

(a) *Effective date of certain sections.* Sections 1.355–1 through 1.355–4 apply to transactions occurring after February 6, 1989. For transactions occurring on or before that date, see 26 CFR 1.355–1 through 1.355–4 (revised as of April 1, 1987). Sections 1.355–1 through 1.355–4 do not reflect the amendments to section 355 made by the Revenue Act of 1987 and the Technical and Miscellaneous Revenue Act of 1988.

(b) *Application of section.* Section 355 provides for the separation, without recognition of gain or loss to (or the inclusion in income of) the shareholders and security holders, of one or more existing businesses formerly operated, directly or indirectly, by a single corporation (the ''distributing corporation''). It applies only to the separation of existing businesses that have been in active operation for at least five years (or a business that has been in active operation for at least five years into separate businesses), and which, in general, have been owned, directly or indirectly, for at least five years by the distributing corporation. A separation is achieved through the distribution by the distributing corporation of stock, or stock and securities, of one or more subsidiaries (the ''controlled corporations'') to its shareholders with respect to its stock or to its security holders in exchange for its securities. The controlled corporations may be preexisting or newly created subsidiaries. Throughout the regulations under section 355, the term *distribution* refers to a distribution by the distributing corporation of stock, or stock and securities, of one or more controlled corporations, unless the context indicates otherwise. Section 355 contemplates the continued operation of the business or businesses existing prior to the separation. See §1.355–4 for types of distributions that may qualify under section 355, including pro rata distributions and non pro rata distributions.

(c) *Stock rights.* Except as provided in §1.356–6T, for purposes of section 355, the term *securities* includes rights issued by the distributing corporation or the controlled corporation to acquire the stock of that corporation. For purposes of this section and section 356(d)(2)(B), a right to acquire stock has no principal amount. For this purpose, rights to acquire stock has the same meaning as it does under sections 305 and 317(a). Other Internal Revenue Code provisions governing the treatment of rights to acquire stock may also apply to certain distributions occurring in connection with a transaction described in section 355. See, for example, sections 83 and 421 through 424 and the regulations thereunder. This paragraph (c) applies to distributions occurring on or after March 9, 1998.

[T.D. 8238, 54 FR 289, Jan. 5, 1989, as amended by T.D. 8752, 63 FR 410, Jan. 6, 1998]

§1.355–2 Limitations.

(a) *Property distributed.* Section 355 applies to a distribution only if the property distributed consists solely of stock, or stock and securities, of a controlled corporation. If additional property (including an excess principal amount of securities received over securities surrendered) is received, see section 356.

(b) *Independent business purpose*—(1) *Independent business purpose requirement.* Section 355 applies to a transaction only if it is carried out for one or more corporate business purposes. A transaction is carried out for a corporate business purpose if it is motivated, in whole or substantial part, by one or more corporate business purposes. The potential for the avoidance of Federal taxes by the distributing or controlled corporations (or a corporation controlled by either) is relevant in determining the extent to which an existing corporate business purpose motivated the distribution. The principal reason for this business purpose requirement is to provide nonrecognition treatment only to distributions that are incident to readjustments of corporate structures required by business exigencies and that effect only readjustments of continuing interests in property under modified corporate forms. This business purpose requirement is independent of the other requirements under section 355.

(2) *Corporate business purpose.* A corporate business purpose is a real and substantial non Federal tax purpose germane to the business of the distributing corporation, the controlled corporation, or the affiliated group (as defined in § 1.355–3(b)(4)(iv)) to which the distributing corporation belongs. A purpose of reducing non Federal taxes is not a corporate business purpose if (i) the transaction will effect a reduction in both Federal and non Federal taxes because of similarities between Federal tax law and the tax law of the other jurisdiction and (ii) the reduction of Federal taxes is greater than or substantially coextensive with the reduction of non Federal taxes. See *Examples (7)* and *(8)* of paragraph (b)(5) of this section. A shareholder purpose (for example, the personal planning purposes of a shareholder) is not a corporate business purpose. Depending upon the facts of a particular case, however, a shareholder purpose for a transaction may be so nearly coextensive with a corporate business purpose as to preclude any distinction between them. In such a case, the transaction is carried out for one or more corporate business purposes. See *Example (2)* of paragraph (b)(5) of this section.

(3) *Business purpose for distribution.* The distribution must be carried out for one or more corporate business purposes. See *Example (3)* of paragraph (b)(5) of this section. If a corporate business purpose can be achieved through a nontaxable transaction that does not involve the distribution of stock of a controlled corporation and which is neither impractical nor unduly expensive, then, for purposes of paragraph (b)(1) of this section, the separation is not carried out for that corporate business purpose. See *Examples (3)* and *(4)* of paragraph (b)(5) of this section. For rules with respect to the requirement of a business purpose for a transfer of assets to a controlled corporation in connection with a reorganization described in section 368(a)(1)(D), *See* § 1.368–1(b).

(4) *Business purpose as evidence of nondevice.* The corporate business purpose or purposes for a transaction are evidence that the transaction was not used principally as a device for the distribution of earnings and profits within the meaning of section 355(a)(1)(B). *See* paragraph (d)(3)(ii) of this section.

(5) *Examples.* The provisions of this paragraph (b) may be illustrated by the following examples:

Example (1). Corporation X is engaged in the production, transportation, and refining of petroleum products. In 1985, X acquires all of the properties of corporation Z, which is also engaged in the production, transportation, and refining of petroleum products. In 1991, as a result of antitrust litigation, X is ordered to divest itself of all of the properties acquired from Z. X transfers those properties to new corporation Y and distributes the stock of Y pro rata to X's shareholders. In view of the divestiture order, the distribution is carried out for a corporate business purpose. See paragraph (b)(1) of this section.

Example (2). Corporation X is engaged in two businesses: The manufacture and sale of furniture and the sale of jewelry. The businesses are of equal value. The outstanding stock of X is owned equally by unrelated individuals A and B. A is more interested in the furniture business, while B is more interested in the jewelry business. A and B decide to split up the businesses and go their separate ways. A and B anticipate that the operations of each business will be enhanced by the separation because each shareholder will be able to devote his undivided attention to the business in which he is more interested

and more proficient. Accordingly, X transfers the jewelry business to new corporation Y and distributes the stock of Y to B in exchange for all of B's stock in X. The distribution is carried out for a corporate business purpose, notwithstanding that it is also carried out in part for shareholder purposes. See paragraph (b)(2) of this section.

Example (3). Corporation X is engaged in the manufacture and sale of toys and the manufacture and sale of candy. The shareholders of X wish to protect the candy business from the risks and vicissitudes of the toy business. Accordingly, X transfers the toy business to new corporation Y and distributes the stock of Y to X's shareholders. Under applicable law, the purpose of protecting the candy business from the risks and vicissitudes of the toy business is achieved as soon as X transfers the toy business to Y. Therefore, the distribution is not carried out for a corporate business purpose. See paragraph (b)(3) of this section.

Example (4). Corporation X is engaged in a regulated business in State T. X owns all of the stock of corporation Y, a profitable corporation that is not engaged in a regulated business. Commission C sets the rates that X may charge its customers, based on its total income. C has recently adopted rules according to which the total income of a corporation includes the income of a business if, and only if, the business is operated, directly or indirectly, by the corporation. Total income, for this purpose, includes the income of a wholly owned subsidiary corporation but does not include the income of a parent or ''brother/sister'' corporation. Under C's new rule, X's total income includes the income of Y, with the result that X has suffered a reduction of the rates that it may charge its customers. It would not be impractical or unduly expensive to create in a nontaxable transaction (such as a transaction qualifying under section 351) a holding company to hold the stock of X and Y. X distributes the stock of Y to X's shareholders. The distribution is not carried out for the purpose of increasing the rates that X may charge its customers because that purpose could be achieved through a nontaxable transaction, the creation of a holding company, that does not involve the distribution of stock of a controlled corporation and which is neither impractical nor unduly expensive. See paragraph (b)(3) of this section.

Example (5). The facts are the same as in *Example (4),* except that C has recently adopted rules according to which the total income of a corporation includes not only the income included in *Example (3),* but also the income of any member of the affiliated group to which the corporation belongs. In order to avoid a reduction in the rates that it may charge its customers, X distributes the stock of Y to X's shareholders. The distribution is carried out for a corporate business purpose. See paragraph (b)(3) of this section.

Example (6). (i) Corporation X owns all of the one class of stock of corporation Y. X distributes the stock of Y pro rata to its five shareholders, all of whom are individuals, for the sole purpose of enabling X and/or Y to elect to become an S corporation. The distribution does not meet the corporate business purpose requirement. See paragraph (b)(1) and (2) of this section.

(ii) The facts are the same as in *Example 6(i),* except that the business of Y is operated as a division of X. X transfers this division to new corporation Y and distributes the stock of Y pro rata to its shareholders, all of whom are individuals, for the sole purpose of enabling X and/or Y to elect to become an S corporation. The distribution does not meet the corporate business purpose requirement. See paragraph (b)(1) and (2) of this section.

Example (7). The facts are the same as in *Example (6)(i),* except that the distribution is made to enable X to elect to become an S corporation both for Federal tax purposes and for purposes of the income tax imposed by State M. State M has tax law provisions similar to subchapter S of the Internal Revenue Code of 1986. An election to be an S corporation for Federal tax purposes will effect a substantial reduction in Federal taxes that is greater than the reduction of State M taxes pursuant to an election to be an S corporation for State M purposes. The purpose of reducing State M taxes is not a corporate business purpose. The distribution does not meet the corporate business purpose requirements. See paragraph (b)(1) and (2) of this section.

Example (8). The facts are the same as *Example (7),* except that the distribution also is made to enable *A,* a key employee of Y, to acquire stock of Y without investing in X. A is considered to be critical to the success of Y and he has indicated that he will seriously consider leaving the company if he is not given the opportunity to purchase a significant amount of stock of Y. As a matter of state law, Y could not issue stock to the employee while it was a subsidiary of X. As in *Example (7),* the purpose of reducing State M taxes is not a corporate business purpose. In order to determine whether the issuance of stock to the key employee, in fact, motivated the distribution of the Y stock, the potential avoidance of Federal taxes is a relevant factor to take into account. If the facts and circumstances establish that the distribution was substantially motivated by the need to issue stock to the employee, the distribution will meet the corporate business purpose requirement.

(c) *Continuity of interest requirement*—(1) *Requirement.* Section 355 applies to a separation that effects only a readjustment of continuing interests in the

property of the distributing and controlled corporations. In this regard section 355 requires that one or more persons who, directly or indirectly, were the owners of the enterprise prior to the distribution or exchange own, in the aggregate, an amount of stock establishing a continuity of interest in each of the modified corporate forms in which the enterprise is conducted after the separation. This continuity of interest requirement is independent of the other requirements under section 355.

(2) *Examples.*

Example (1) . For more than five years, corporation X has been engaged directly in one business, and indirectly in a different business through its wholly owned subsidiary, S. The businesses are equal in value. At all times, the outstanding stock of X has been owned equally by unrelated individuals A and B. For valid business reasons, A and B cause X to distribute all of the stock of S to B in exchange for all of B's stock in X. After the transaction, A owns all the stock of X and B owns all the stock of S. The continuity of interest requirement is met because one or more persons who were the owners of X prior to the distribution (A and B) own, in the aggregate, an amount of stock establishing a continuity of interest in each of X and S after the distribution.

Example (2) . Assume the same facts as in *Example (1),* except that pursuant to a plan to acquire a stock interest in X without acquiring, directly or indirectly, an interest in S, C purchased one-half of the X stock owned by A and immediately thereafter X distributed all of the S stock to B in exchange for all of B's stock in X. After the transactions, A owns 50 percent of X and B owns 100 percent of S. The distribution by X of all of the stock of S to B in exchange for all of B's stock in X will satisfy the continuity of interest requirement for section 355 because one or more persons who were the owners of X prior to the distribution (A and B) own, in the aggregate, an amount of stock establishing a continuity of interest in each of X and S after the distribution.

Example (3) . Assume the same facts as in *Examples (1) and (2),* except that C purchased all of the X stock owned by A. After the transactions, neither A nor B own any of the stock of X, and B owns all the stock of S. The continuity of interest requirement is not met because the owners of X prior to the distribution (A and B) do not, in the aggregate, own an amount of stock establishing a continuity of interest in each of X and S after the distribution, *i.e.,* although A and B collectively have retained 50 percent of their equity interest in the former combined enterprise, they have failed to continue to own the minimum stock interest in the distributing corporation, X, that would be required in order to meet the continuity of interest requirement.

Example (4) . Assume the same facts as in *Examples (1) and (2),* except that C purchased 80 percent of the X stock owned by A. After the transactions, A owns 20 percent of the stock of X, B owns no X stock, and B owns 100 percent of the S stock. The continuity of interest requirement is not met because the owners of X prior to the distribution (A and B) do not, in the aggregate, have a continuity of interest in each of X and S after the distribution, *i.e.,* although A and B collectively have retained 60 percent of their equity interest in the former combined enterprise, the 20 percent interest of A in X is less than the minimum equity interest in the distributing corporation, X, that would be required in order to meet the continuity of interest requirement.

(d) *Device for distribution of earnings and profits*—(1) *In general.* Section 355 does not apply to a transaction used principally as a device for the distribution of the earnings and profits of the distributing corporation, the controlled corporation, or both (a ''device''). Section 355 recognizes that a tax-free distribution of the stock of a controlled corporation presents a potential for tax avoidance by facilitating the avoidance of the dividend provisions of the Code through the subsequent sale or exchange of stock of one corporation and the retention of the stock of another corporation. A device can include a transaction that effects a recovery of basis. In this paragraph (d), ''exchange'' includes transactions, such as redemptions, treated as exchanges under the Code. Generally, the determination of whether a transaction was used principally as a device will be made from all of the facts and circumstances, including, but not limited to, the presence of the device factors specified in paragraph (d)(2) of this section (''evidence of device''), and the presence of the nondevice factors specified in paragraph (d)(3) of this section (''evidence of nondevice''). However, if a transaction is specified in paragraph (d)(5) of this section, then it is ordinarily considered not to have been used principally as a device.

(2) *Device factors*—(i) *In general.* The presence of any of the device factors specified in this subparagraph (2) is

evidence of device. The strength of this evidence depends on the facts and circumstances.

(ii) *Pro rata distribution.* A distribution that is pro rata or substantially pro rata among the shareholders of the distributing corporation presents the greatest potential for the avoidance of the dividend provisions of the Code and, in contrast to other types of distributions, is more likely to be used principally as a device. Accordingly, the fact that a distribution is pro rata or substantially pro rata is evidence of device.

(iii) *Subsequent sale or exchange of stock*—(A) *In general.* A sale or exchange of stock of the distributing or the controlled corporation after the distribution (a ''subsequent sale or exchange'') is evidence of device. Generally, the greater the percentage of the stock sold or exchanged after the distribution, the stronger the evidence of device. In addition, the shorter the period of time between the distribution and the sale or exchange, the stronger the evidence of device.

(B) *Sale or exchange negotiated or agreed upon before the distribution.* A subsequent sale or exchange pursuant to an arrangement negotiated or agreed upon before the distribution is substantial evidence of device.

(C) *Sale or exchange not negotiated or agreed upon before the distribution.* A subsequent sale or exchange not pursuant to an arrangement negotiated or agreed upon before the distribution is evidence of device.

(D) *Negotiated or agreed upon before the distribution.* For purposes of this subparagraph (2), a sale or exchange is always pursuant to an arrangement negotiated or agreed upon before the distribution if enforceable rights to buy or sell existed before the distribution. If a sale or exchange was discussed by the buyer and the seller before the distribution and was reasonably to be anticipated by both parties, then the sale or exchange will ordinarily be considered to be pursuant to an arrangement negotiated or agreed upon before the distribution.

(E) *Exchange in pursuance of a plan of reorganization.* For purposes of this subparagraph (2), if stock is exchanged for stock in pursuance of a plan of reorganization, and either no gain or loss or only an insubstantial amount of gain is recognized on the exchange, then the exchange is not treated as a subsequent sale or exchange, but the stock received in the exchange is treated as the stock surrendered in the exchange. For this purpose, gain treated as a dividend pursuant to sections 356(a)(2) and 316 shall be disregarded.

(iv) *Nature and use of assets*—(A) *In general.* The determination of whether a transaction was used principally as a device will take into account the nature, kind, amount, and use of the assets of the distributing and the controlled corporations (and corporations controlled by them) immediately after the transaction.

(B) *Assets not used in a trade or business meeting the requirement of section 355(b).* The existence of assets that are not used in a trade or business that satisfies the requirements of section 355(b) is evidence of device. For this purpose, assets that are not used in a trade or business that satisfies the requirements of section 355(b) include, but are not limited to, cash and other liquid assets that are not related to the reasonable needs of a business satisfying such section. The strength of the evidence of device depends on all the facts and circumstances, including, but not limited to, the ratio for each corporation of the value of assets not used in a trade or business that satisfies the requirements of section 355(b) to the value of its business that satisfies such requirements. A difference in the ratio described in the preceding sentence for the distributing and controlled corporation is ordinarily not evidence of device if the distribution is not pro rata among the shareholders of the distributing corporation and such difference is attributable to a need to equalize the value of the stock distributed and the value of the stock or securities exchanged by the distributees.

(C) *Related function.* There is evidence of device if a business of either the distributing or controlled corporation (or a corporation controlled by it) is (*1*) a ''secondary business'' that continues as a secondary business for a significant period after the separation, and (*2*) can be sold without adversely affecting the business of the other corporation (or a

corporation controlled by it). A secondary business is a business of either the distributing or controlled corporation, if its principal function is to serve the business of the other corporation (or a corporation controlled by it). A secondary business can include a business transferred to a newly-created subsidiary or a business which serves a business transferred to a newly-created subsidiary. The activities of the secondary business may consist of providing property or performing services. Thus, in *Example (11)* of § 1.355–3(c), evidence of device would be presented if the principal function of the coal mine (satisfying the requirements of the steel business) continued after the separation and the coal mine could be sold without adversely affecting the steel business. Similarly, in *Example (10)* of § 1.355–3(c), evidence of device would be presented if the principal function of the sales operation after the separation is to sell the output from the manufacturing operation and the sales operation could be sold without adversely affecting the manufacturing operation.

(3) *Nondevice factors*—(i) *In general.* The presence of any of the nondevice factors specified in this subparagraph (3) is evidence of nondevice. The strength of this evidence depends on all of the facts and circumstances.

(ii) *Corporate business purpose.* The corporate business purpose for the transaction is evidence of nondevice. The stronger the evidence of device (such as the presence of the device factors specified in paragraph (d)(2) of this section), the stronger the corporate business purpose required to prevent the determination that the transaction was used principally as a device. Evidence of device presented by the transfer or retention of assets not used in a trade or business that satisfies the requirements of section 355(b) can be outweighed by the existence of a corporate business purpose for those transfers or retentions. The assessment of the strength of a corporate business purpose will be based on all of the facts and circumstances, including, but not limited to, the following factors:

(A) The importance of achieving the purpose to the success of the business;

(B) The extent to which the transaction is prompted by a person not having a proprietary interest in either corporation, or by other outside factors beyond the control of the distributing corporation; and

(C) The immediacy of the conditions prompting the transaction.

(iii) *Distributing corporation publicly traded and widely held.* The fact that the distributing corporation is publicly traded and has no shareholder who is directly or indirectly the beneficial owner of more than five percent of any class of stock is evidence of nondevice.

(iv) *Distribution to domestic corporate shareholders.* The fact that the stock of the controlled corporation is distributed to one or more domestic corporations that, if section 355 did not apply, would be entitled to a deduction under section 243(a)(1) available to corporations meeting the stock ownership requirements of section 243(c), or a deduction under section 243(a)(2) or (3) or 245(b) is evidence of nondevice.

(4) *Examples.* The provisions of paragraph (d)(1) through (3) of this section may be illustrated by the following examples:

Example (1). Individual A owns all of the stock of corporation X, which is engaged in the warehousing business. X owns all of the stock of corporation Y, which is engaged in the transportation business. X employs individual B, who is extremely knowledgeable of the warehousing business in general and the operations of X in particular. B has informed A that he will seriously consider leaving the company if he is not given the opportunity to purchase a significant amount of stock of X. Because of his knowledge and experience, the loss of B would seriously damage the business of X. B cannot afford to purchase any significant amount of stock of X as long as X owns Y. Accordingly, X distributes the stock of Y to A and A subsequently sells a portion of his X stock to B. However, X could have issued additional shares to B sufficient to give B an equivalent ownership interest in X. There is no other evidence of device or evidence of nondevice. In light of the fact that X could have issued additional shares to B, the sale of X stock by A is substantial evidence of device. The transaction is considered to have been used principally as a device. See paragraph (d)(1), (2)(ii), (iii)(A), (B) and (D), and (3)(i) and (ii) of this section.

Example (2). Corporation X owns and operates a fast food restaurant in State M and owns all of the stock of corporation Y, which owns and operates a fast food restaurant in State N. X and Y operate their businesses

under franchises granted by D and E, respectively. X owns cash and marketable securities that exceed the reasonable needs of its business but whose value is small relative to the value of its business. E has recently changed its franchise policy and will no longer grant or renew franchises to subsidiaries (or other members of the same affiliated group) of corporations operating businesses under franchises granted by its competitors. Thus, Y will lose its franchise if it remains a subsidiary of X. The franchise is about to expire. Accordingly, X distributes the stock of Y pro rata among X's shareholders. X retains its business and transfers cash and marketable securities to Y in an amount proportional to the value of Y's business. There is no other evidence of device or evidence of nondevice. The transfer by X to Y and the retention by X of cash and marketable securities is relatively weak evidence of device because after the transfer X and Y hold cash and marketable securities in amounts proportional to the values of their businesses. The fact that the distribution is pro rata is evidence of device. A strong corporate business purpose is relatively strong evidence of nondevice. Accordingly, the transaction is considered not to have been used principally as a device. See paragraph (d)(1), (2)(ii), (iv)(A), and (B) and (3)(i) and (ii)(A), (B) and (C) of this section.

Example (3). Corporation X is engaged in a regulated business in State M and owns all of the stock of corporation Y, which is not engaged in a regulated business in State M. State M has recently amended its laws to provide that affiliated corporations operating in M may not conduct both regulated and unregulated businesses. X transfers cash not related to the reasonable needs of the business of X or Y to Y and then distributes the stock of Y pro rata among X's shareholders. As a result of the transfer of cash, the ratio of the value of its assets not used in a trade or business that satisfies the requirements of section 355(b) to the value of its business is substantially greater for Y than for X. There is no other evidence of device or evidence of nondevice. The transfer of cash by X to Y is relatively strong evidence of device because after the transfer Y holds disproportionately many assets that are not used in a trade or business that satisfies the requirements of section 355(b). The fact that the distribution is pro rata is evidence of device. The strong business purpose is relatively strong evidence of nondevice, but it does not pertain to the transfer. Accordingly, the transaction is considered to have been used principally as a device. See paragraph (d)(1), (2)(ii), (iv)(A) and (B), and (3) and (i) and (ii) of this section.

Example (4). The facts are the same as in *Example (3)*, except that, instead of transferring cash to Y, X purchases operating assets unrelated to the business of Y and transfers them to Y prior to the distribution. There is no other evidence of device or evidence of nondevice. The transaction is considered to have been used principally as a device. See paragraph (d)(1), (2)(ii), (iv)(A) and (B), and (3)(i) and (ii) of this section.

(5) *Transactions ordinarily not considered as a device*—(i) *In general.* This subparagraph (5) specifies three distributions that ordinarily do not present the potential for tax avoidance described in paragraph (d)(1) of this section. Accordingly, such distributions are ordinarily considered not to have been used principally as a device, notwithstanding the presence of any of the device factors described in paragraph (d)(2) of this section. A transaction described in paragraph (d)(5)(iii) or (iv) of this section is not protected by this subparagraph (5) from a determination that it was used principally as a device if it involves the distribution of the stock of more than one controlled corporation and facilitates the avoidance of the dividend provisions of the Code through the subsequent sale or exchange of stock of one corporation and the retention of the stock of another corporation.

(ii) *Absence of earnings and profits.* A distribution is ordinarily considered not to have been used principally as a device if—

(A) The distributing and controlled corporations have no accumulated earnings and profits at the beginning of their respective taxable years,

(B) The distributing and controlled corporations have no current earnings and profits as of the date of the distribution, and

(C) No distribution of property by the distributing corporation immediately before the separation would require recognition of gain resulting in current earnings and profits for the taxable year of the distribution.

(iii) *Section 303(a) transactions.* A distribution is ordinarily considered not to have been used principally as a device if, in the absence of section 355, with respect to each shareholder distributee, the distribution would be a redemption to which section 303(a) applied.

(iv) *Section 302(a) transactions.* A distribution is ordinarily considered not

to have been used principally as a device if, in the absence of section 355, with respect to each shareholder distributee, the distribution would be a redemption to which section 302(a) applied. For purposes of the preceding sentence, section 302(c)(2)(A)(ii) and (iii) shall not apply.

(v) *Examples.* The provisions of this subparagraph (5) may be illustrated by the following examples:

Example (1) . The facts are the same as in *Example (3)* of paragraph (d)(4) of this section, except that X and Y had no accumulated earnings and profits at the beginning of its taxable year, X and Y have no current earnings and profits as of the date of the distribution, and no distribution of property by X immediately before the separation would require recognition of gain that would result in earnings and profits for the taxable year of the distribution. The transaction is considered not to have been used principally as a device. See paragraph (d)(5)(i) and (ii) of this section.

Example (2) . Corporation X is engaged in three businesses: a hotel business, a restaurant business, and a rental real estate business. Individuals A, B, and C own all of the stock of X. X transfers the restaurant business to new corporation Y and transfers the rental real estate business to new corporation Z. X then distributes the stock of Y and Z pro rata between B and C in exchange for all of their stock in X. In the absence of section 355, the distribution would be a redemption to which section 302(a) applied. Since this distribution involves the stock of more than one controlled corporation and facilitates the avoidance of the dividend provisions of the Code through the subsequent sale or exchange of stock in one corporation and the retention of the stock of another corporation, it is not protected by paragraph (d)(5)(i) and (iv) of this section from a determination that it was used principally as a device. Thus, the determination of whether the transaction was used principally as a device must be made from all the facts and circumstances, including the presence of the device factors and nondevice factors specified in paragraph (d)(2) and (3) of this section.

(e) *Stock and securities distributed*—(1) *In general.* Section 355 applies to a distribution only if the distributing corporation distributes—

(i) All of the stock and securities of the controlled corporation that it owns, or

(ii) At least an amount of the stock of the controlled corporation that constitutes control as defined in section 368(c). In such a case, all, or any part, of the securities of the controlled corporation may be distributed, and paragraph (e)(2) of this section shall apply.

(2) *Additional rules.* Where a part of either the stock or the securities of the controlled corporation is retained under paragraph (e)(1)(ii) of this section, it must be established to the satisfaction of the Commissioner that the retention by the distributing corporation was not in pursuance of a plan having as one of its principal purposes the avoidance of Federal income tax. Ordinarily, the corporate business purpose or purposes for the distribution will require the distribution of all of the stock and securities of the controlled corporation. If the distribution of all of the stock and securities of a controlled corporation would be treated to any extent as a distribution of ''other property'' under section 356, this fact tends to establish that the retention of stock or securities is in pursuance of a plan having as one of its principal purposes the avoidance of Federal income tax.

(f) *Principal amount of securities*—(1) *Securities received.* Section 355 does not apply to a distribution if, with respect to any shareholder or security holder, the principal amount of securities received exceeds the principal amount of securities surrendered, or securities are received but no securities are surrendered. In such cases, see section 356.

(2) *Only stock received.* If only stock is received in a distribution to which section 355(a)(1)(A) applies, the principal amount of the securities surrendered, if any, and the par value or stated value of the stock surrendered, if any, are not relevant to the application of that section.

(g) *Period of ownership*—(1) *Other property.* For purposes of section 355(a)(1)(A), stock of a controlled corporation acquired in a transaction in which gain or loss was recognized in whole or in part (other than a transaction described in § 1.355–3(b)(4)(iii)) within the five-year period ending on the date of the distribution shall not be treated as stock of the controlled corporation but shall be treated as ''other property.'' See section 356. However, for purposes of section 355(a)(1)(D), the

stock so acquired is stock of the controlled corporation.

(2) *Example.* Paragraph (g)(1) of this section may be illustrated by the following example:

Example. Corporation X has held 85 of the 100 outstanding shares of the stock of corporation Y for more than five years on the date of the distribution. Six months before that date, X purchased ten more shares. If X distributes all of its 95 shares of the stock of Y, so much of section 356 as relates to section 355 may apply to the transaction and the ten newly acquired shares are treated as other property. On the other hand, if X retains ten of the shares of the stock of Y then the application of paragraph (e) of this section must take into account all of the stock of Y, including the ten shares newly acquired by X and the five shares owned by others. Similarly, if, by the use of any agency, X acquired any of the stock of Y within the five-year period ending on the date of the distribution in a transaction in which gain or loss was recognized in whole or in part (for example, where another subsidiary of X purchased stock of Y), then that stock is treated as other property. If X had held only 75 of the 100 outstanding shares of the stock of Y for more than five years on the date of the distribution and had purchased the remaining 25 shares six months before that date, then neither section 355 nor section 356 would apply to the distribution.

(h) *Active conduct of a trade or business.* Section 355 applies to a distribution only if the requirements of § 1.355–3 (relating to the active conduct of a trade or business) are satisfied.

[T.D. 8238, 54 FR 290, Jan. 5, 1989; 54 FR 5577, Feb. 3, 1989; 57 FR 28463, June 25, 1992]

§ 1.355–3 Active conduct of a trade or business.

(a) *General requirements*—(1) *Application of section 355.* Under section 355(b)(1), a distribution of stock, or stock and securities, of a controlled corporation qualifies under section 355 only if—

(i) The distributing and the controlled corporations are each engaged in the active conduct of a trade or business immediately after the distribution (section 355(b)(1)(A)), or

(ii) Immediately before the distribution, the distributing corporation had no assets other than stock or securities of the controlled corporations, and each of the controlled corporations is engaged in the active conduct of a trade or business immediately after the distribution (section 355(b)(1)(B)). A *de minimis* amount of assets held by the distributing corporation shall be disregarded for purposes of this paragraph (a)(1)(ii).

(2) *Examples.* Paragraph (a)(1) of this section may be illustrated by the following examples:

Example (1). Prior to the distribution, corporation X is engaged in the active conduct of a trade or business and owns all of the stock of corporation Y, which also is engaged in the active conduct of a trade or business. X distributes all of the stock of Y to X's shareholders, and each corporation continues the active conduct of its trade or business. The active business requirement of section 355(b)(1)(A) is satisfied.

Example (2). The facts are the same as in *Example (1)*, except that X transfers all of its assets other than the stock of Y to a new corporation in exchange for all of the stock of the new corporation and then distributes the stock of both controlled corporations to X's shareholders. The active business requirement of section 355(b)(1)(B) is satisfied.

(b) *Active conduct of a trade or business defined*—(1) *In general.* Section 355(b)(2) provides rules for determining whether a corporation is treated as engaged in the active conduct of a trade or business for purposes of section 355(b)(1). Under section 355(b)(2)(A), a corporation is treated as engaged in the active conduct of a trade or business if it is itself engaged in the active conduct of a trade or business or if substantially all of its assets consist of the stock, or stock and securities, of a corporation or corporations controlled by it (immediately after the distribution) each of which is engaged in the active conduct of a trade or business.

(2) *Active conduct of a trade or business immediately after distribution*—(i) *In general.* For purposes of section 355(b), a corporation shall be treated as engaged in the ''active conduct of a trade or business'' immediately after the distribution if the assets and activities of the corporation satisfy the requirements and limitations described in paragraph (b)(2)(ii), (iii), and (iv) of this section.

(ii) *Trade or business.* A corporation shall be treated as engaged in a trade

or business immediately after the distribution if a specific group of activities are being carried on by the corporation for the purpose of earning income or profit, and the activities included in such group include every operation that forms a part of, or a step in, the process of earning income or profit. Such group of activities ordinarily must include the collection of income and the payment of expenses.

(iii) *Active conduct.* For purposes of section 355(b), the determination whether a trade or business is actively conducted will be made from all of the facts and circumstances. Generally, the corporation is required itself to perform active and substantial management and operational functions. Generally, activities performed by the corporation itself do not include activities performed by persons outside the corporation, including independent contractors. A corporation may satisfy the requirements of this subdivision (iii) through the activities that it performs itself, even though some of its activities are performed by others. Separations of real property all or substantially all of which is occupied prior to the distribution by the distributing or the controlled corporation (or by any corporation controlled directly or indirectly by either of those corporations) will be carefully scrutinized with respect to the requirements of section 355(b) and this § 1.355–3.

(iv) *Limitations.* The active conduct of a trade or business does not include—

(A) The holding for investment purposes of stock, securities, land, or other property, or

(B) The ownership and operation (including leasing) of real or personal property used in a trade or business, unless the owner performs significant services with respect to the operation and management of the property.

(3) *Active conduct for five-year period preceding distribution.* Under section 355(b)(2)(B), a trade or business that is relied upon to meet the requirements of section 355(b) must have been actively conducted throughout the five-year period ending on the date of the distribution. For purposes of this subparagraph (3)—

(i) Activities which constitute a trade or business under the tests described in paragraph (b)(2) of this section shall be treated as meeting the requirement of the preceding sentence if such activities were actively conducted throughout the 5-year period ending on the date of distribution, and

(ii) The fact that a trade or business underwent change during the five-year period preceding the distribution (for example, by the addition of new or the dropping of old products, changes in production capacity, and the like) shall be disregarded, provided that the changes are not of such a character as to constitute the acquisition of a new or different business. In particular, if a corporation engaged in the active conduct of one trade or business during that five-year period purchased, created, or otherwise acquired another trade or business in the same line of business, then the acquisition of that other business is ordinarily treated as an expansion of the original business, all of which is treated as having been actively conducted during that five-year period, unless that purchase, creation, or other acquisition effects a change of such a character as to constitute the acquisition of a new or different business.

(4) *Special rules for acquisition of a trade or business (Prior to the Revenue Act of 1987 and Technical and Miscellaneous Revenue Act of 1988)*—(i) *In general.* Under section 355(b)(2)(C), a trade or business relied upon to meet the requirements of section 355(b) must not have been acquired by the distributing corporation, the controlled corporation, or another member of the affiliated group during the five-year period ending on the date of the distribution unless it was acquired in a transaction in which no gain or loss was recognized. Similarly, under section 355(b)(2)(D), the trade or business must not have been indirectly acquired by any of those corporations (or a predecessor in interest of any of those corporations) during that five-year period in a transaction in which gain or loss was recognized in whole or in part and which consisted of the acquisition of control of the corporation directly engaged in the trade or business, or the indirect acquisition of control of that corporation through the direct or indirect acquisition of control of one or

more other corporations. A trade or business acquired, directly or indirectly, within the five-year period ending on the date of the distribution in a transaction in which the basis of the assets acquired was not determined in whole or in part by reference to the transferor's basis does not qualify under section 355(b)(2), even though no gain or loss was recognized by the transferror.

(ii) *Example.* Paragraph (b)(4)(i) of this section may be illustrated by the following example:

Example. In 1985, corporation X, which operates a business and has cash and other liquid assets, purchases all of the stock of corporation Y, which is engaged in the active conduct of a trade or business. Later in the same year, X merges into Y in a ''downstream'' statutory merger. In 1986, Y transfers the business assets formerly owned by X to a new subsidiary, corporation Z, and then distributes the stock of Z to Y's shareholders. Section 355 does not apply to the distribution of the stock of Z because the trade or business of Y was indirectly acquired by X, a predecessor in interest of Y, during the five-year period preceding the distribution.

(iii) *Gain or loss recognized in certain transactions.* The requirements of section 355(b)(2)(C) and (D) are intended to prevent the direct or indirect acquisition of a trade or business by a corporation in anticipation of a distribution by the corporation of that trade of business in a distribution to which section 355 would otherwise apply. A direct or indirect acquisition of a trade or business by one member of an affiliated group from another member of the group is not the type of transaction to which section 355(b)(2)(C) and (D) is intended to apply. Therefore, in applying section 355(b)(2)(C) or (D), such an acquisition, even though taxable, shall be disregarded.

(iv) *Affiliated group.* For purposes of this subparagraph (4), the term *affiliated group* means an affiliated group as defined in section 1504(a) (without regard to section 1504(b)), except that the term *stock* includes nonvoting stock described in section 1504(a)(4).

(5) *Special rules for acquisition of a trade or business (After the Revenue Act of 1987 and Technical and Miscellaneous Revenue Act of 1988).* [Reserved]

(c) *Examples.* The following examples illustrate section 355(b)(2)(A) and (B) and paragraph (b)(1), (2), and (3) of this section. However, a transaction that satisfies these active business requirements will qualify under section 355 only if it satisfies the other requirements of section 355 (a) and (b).

Example (1). Corporation X is engaged in the manufacture and sale of soap and detergents and also owns investment securities. X transfers the investment securities to new subsidiary Y and distributes the stocks of Y to X's shareholders. Y does not satisfy the requirements of section 355(b) because the holding of investment securities does not constitute the active conduct of a trade or business. See paragraph (b)(2)(iv)(A) of this section.

Example (2). Corporation X owns, manages, and derives rental income from an office building and also owns vacant land. X transfers the land to new subsidiary Y and distributes the stock of Y to X's shareholders. Y will subdivide the land, install streets and utilities, and sell the developed lots to various homebuilders. Y does not satisfy the requirements of section 355(b) because no significant development activities were conducted with respect to the land during the five-year period ending on the date of the distribution. See paragraph (b)(3) of this section.

Example (3). Corporation X owns land on which it conducts a ranching business. Oil has been discovered in the area, and it is apparent that oil may be found under the land on which the ranching business is conducted. X has engaged in no significant activities in connection with its mineral rights. X transfers its mineral rights to new subsidiary Y and distributes the stock of Y to X's shareholders. Y will actively pursue the development of the oil producing potential of the property. Y does not satisfy the requirements of section 355(b) because X engaged in no significant exploitation activities with respect to the mineral rights during the five-year period ending on the date of the distribution. See paragraph (b)(3) of this section.

Example (4). For more than five years, corporation X has conducted a single business of constructing sewage disposal plants and other facilities. X transfers one-half of its assets to new subsidiary Y. These assets include a contract for the construction of a sewage disposal plant in State M, construction equipment, cash, and other tangible assets. X retains a contract for the construction of a sewage disposal plant in State N, construction equipment, cash, and other intangible assets. X then distributes the stock of Y to one of X's shareholders in exchange for all of his stock of X. X and Y both satisfy the requirements of section 355(b). See paragraph (b)(3)(i) of this section.

Example (5). For the past six years, corporation X has owned and operated two factories devoted to the production of edible pork skins. The entire output of one factory is sold to one customer, C, while the output of the second factory is sold to C and a number of other customers. To eliminate errors in packaging, X opens a new factory. Thereafter, orders from C are processed and packaged at the two original factories, while the new factory handles only orders from other customers. Eight months after opening the new factory, X transfers it and related business assets to new subsidiary Y and distributes the stock of Y to X's shareholders. X and Y both satisfy the requirements of section 355(b). See paragraph (b)(3)(i) and (ii) of this section.

Example (6). Corporation X has owned and operated a men's retail clothing store in the downtown area of the City of G for nine years and has owned and operated another men's retail clothing store in a suburban area of G for seven years. X transfers the store building, fixtures, inventory, and other assets related to the operations of the suburban store to new subsidiary Y. X also transfers to Y the delivery trucks and delivery personnel that formerly served both stores. Henceforth, X will contract with a local public delivery service to make its deliveries. X retains the warehouses that formerly served both stores. Henceforth, Y will lease warehouse space from an unrelated public warehouse company. X then distributes the stock of Y to X's shareholders. X and Y both satisfy the requirements of section 355(b). See paragraph (b)(3)(i) of this section.

Example (7). For the past nine years, corporation X has owned and operated a department store in the downtown area of the City of G. Three years ago, X acquired a parcel of land in a suburban area of G and constructed a new department store on it. X transfers the suburban store and related business assets to new subsidiary Y and distributes the stock of Y to X's shareholders. After the distribution, each store has its own manager and is operated independently of the other store. X and Y both satisfy the requirements of section 355(b). See paragraph (b)(3)(i) and (ii) of this section.

Example (8). For the past six years, corporation X has owned and operated hardware stores in several states. Two years ago, X purchased all of the assets of a hardware store in State M, where X had not previously conducted business. X transfers the State M store and related business assets to new subsidiary Y and distributes the stock of Y to X's shareholders. After the distribution, the State M store has its own manager and is operated independently of the other stores. X and Y both satisfy the requirements of section 355(b). See paragraph (b)(3)(i) and (ii) of this section.

Example (9). For the past eight years, corporation X has engaged in the manufacture and sale of household products. Throughout this period, X has maintained a research department for use in connection with its manufacturing activities. The research department has 30 employees actively engaged in the development of new products. X transfers the research department to new subsidiary Y and distributes the stock of Y to X's shareholders. After the distribution, Y continues its research operations on a contractual basis with several corporations, including X. X and Y both satisfy the requirements of section 355(b). See paragraph (b)(3)(i) of this section. The result in this example is the same if, after the distribution, Y continues its research operations but furnishes its services only to X. See paragraph (b)(3)(i) of this section. However, see § 1.355–2 (d)(2)(iv)(C) (related function device factor) for possible evidence of device.

Example (10). For the past six years, corporation X has processed and sold meat products. X derives income from no other source. X separates the sales function from the processing function by transferring the business assets related to the sales function and cash for working capital to new subsidiary Y. X then distributes the stock of Y to X's shareholders. After the distribution, Y purchases for resale the meat products processed by X. X and Y both satisfy the requirements of section 355(b). See paragraph (b)(3)(i) of this section. However, see § 1.355–2(d)(2)(iv)(C) (related function device factor) for possible evidence of device.

Example (11) . For the past eight years, corporation X has been engaged in the manufacture and sale of steel and steel products. X owns all of the stock of corporation Y, which, for the past six years, has owned and operated a coal mine for the sole purpose of supplying X's coal requirements in the manufacture of steel. X distributes the stock of Y to X's shareholders. X and Y both satisfy the requirements of section 355 (b). See paragraph (b)(3)(i) of this section. However, see § 1 1.355–2 (d)(2)(iv)(C) (related function device factor) for possible evidence of device.

Example (12) . For the past seven years, corporation X, a bank, has owned an eleven-story office building, the ground floor of which X has occupied in the conduct of its banking business. The remaining ten floors are rented to various tenants. Throughout this seven-year period, the building has been managed and maintained by employees of the bank. X transfers the building to new subsidiary Y and distributes the stock of Y to X's shareholders. Henceforth, Y will manage the building, negotiate leases, seek new tenants, and repair and maintain the building. X and Y both satisfy the requirements of section 355 (b). See paragraph (b)(3) of this section.

Example (13) . For the past nine years, corporation X, a bank, has owned a two-story building, the ground floor and one half of the second floor of which X has occupied in the conduct of its banking business. The other half of the second floor has been rented as storage space to a neighboring retail merchant. X transfers the building to new subsidiary Y and distributes the stock of Y to X's shareholders. After the distribution, X leases from Y the space in the building that it formerly occupied. Under the lease, X will repair and maintain its portion of the building and pay property taxes and insurance. Y does not satisfy the requirements of section 355 (b) because it is not engaged in the active conduct of a trade or business immediately after the distribution. See paragraph (b)(2)(iv)(A) of this section. This example does not address the question of whether the activities of X with respect to the building prior to the separation would constitute the active conduct of a trade or business.

[T.D. 8238, 54 FR 294, Jan. 5, 1989]

§ 1.355–4 Non pro rata distributions, etc.

Section 355 provides for nonrecognition of gain or loss with respect to a distribution whether or not (a) the distribution is pro rata with respect to all of the shareholders of the distributing corporation, (b) the distribution is pursuant to a plan of reorganization within the meaning of section 368 (a) (1)(D), or (c) the shareholder surrenders stock in the distributing corporation. Under section 355, the stock of a controlled corporation may consist of common stock or preferred stock. (See, however, section 306 and the regulations thereunder.) Section 355 does not apply, however, if the substance of a transaction is merely an exchange between shareholders or security holders of stock or securities in one corporation for stock or securities in another corporation. For example, if two individuals, A and B, each own directly 50 percent of the stock of corporation X and 50 percent of the stock of corporation Y, section 355 would not apply to a transaction in which A and B transfer all of their stock of X and Y to a new corporation Z, for all of the stock of Z, and Z then distributes the stock of X to A and the stock of Y to B.

[T.D. 8238, 54 FR 296, Jan. 5, 1989]

§ 1.355–5 Records to be kept and information to be filed.

(a) Every corporation that makes a distribution of stock or securities of a controlled corporation, as described in section 355, shall attach to its return for the year of the distribution a detailed statement setting forth such data as may be appropriate in order to show compliance with the provisions of such section.

(b) Every taxpayer who receives a distribution of stock or securities of a corporation that was controlled by a corporation in which he holds stock or securities shall attach to his return for the year in which such distribution is received a detailed statement setting forth such data as may be appropriate in order to show the applicability of section 355. Such statement shall include, but shall not be limited to, a description of the stock and securities surrendered (if any) and received, and the names and addresses of all of the corporations involved in the transaction.

§ 1.355–6 Certain distributions qualifying under section 355 made ineligible for norecognition of gain to the distributing corporation under § 337(d). [Reserved]

[T.D. 8238, 54 FR 296, Jan. 5, 1989]

§ 1.356–1 Receipt of additional consideration in connection with an exchange.

(a) If in any exchange to which the provisions of section 354 or section 355 would apply except for the fact that there is received by the shareholders or the security holders other property (in addition to property permitted to be received without recognition of gain by such sections) or money, then—

(1) The gain, if any, to the taxpayer shall be recognized in an amount not in excess of the sum of the money and the fair market value of the other property, but,

(2) The loss, if any, to the taxpayer from the exchange or distribution shall not be recognized to any extent.

(b) If the distribution of such other property or money by or on behalf of a corporation has the effect of the distribution of a dividend, then there shall be chargeable to each distributee

(either an individual or a corporation)—

(1) As a dividend, such an amount of the gain recognized as is not in excess of the distributee's ratable share of the undistributed earnings and profits of the corporation accumulated after February 28, 1913, and

(2) As a gain from the exchange of property, the remainder of the gain so recognized.

(c) This section may be illustrated by the following examples:

Example (1). In an exchange to which the provisions of section 356 apply and to which section 354 would apply but for the receipt of property not permitted to be received without the recognition of gain or loss, A (either an individual or a corporation), received the following in exchange for a share of stock having an adjusted basis to him of $85:

One share of stock worth	$100
Cash	25
Other property (basis $25) fair market value	50
Total fair market value of consideration received	175
Adjusted basis of stock surrendered in exchange	85
Total gain	90
Gain to be recognized, limited to cash and other property received	75
A's pro rata share of earnings and profits accumulated after February 28, 1913 (taxable dividend)	30
Remainder to be treated as a gain from the exchange of property	45

Example (2). If, in *Example (1)*, A's stock had an adjusted basis to him of $200, he would have realized a loss of $25 on the exchange, which loss would not be recognized.

(d) Section 301(b)(1)(B) and section 301(d)(2) do not apply to a distribution of ''other property'' to a corporate shareholder if such distribution is within the provisions of section 356.

(e) See paragraph (1) of § 1.301–1 for certain transactions which are not within the scope of section 356.

§ 1.356–2 Receipt of additional consideration not in connection with an exchange.

(a) If, in a transaction to which section 355 would apply except for the fact that a shareholder (individual or corporate) receives property permitted by section 355 to be received without the recognition of gain, together with other property or money, without the surrender of any stock or securities of the distributing corporation, then the sum of the money and the fair market value of the other property as of the date of the distribution shall be treated as a distribution of property to which the rules of section 301 (other than section 301(b) and section 301(d)) apply. See section 358 for determination of basis of such other property.

(b) Paragraph (a) of this section may be illustrated by the following examples:

Example (1). Individuals A and B each own 50 of the 100 outstanding shares of common stock of Corporation X. Corporation X owns all of the stock of Corporation Y, 100 shares. Corporation X distributes to each shareholder 50 shares of the stock of Corporation Y plus $100 cash without requiring the surrender of any shares of its own stock. The $100 cash received by each is treated as a distribution of property to which the rules of section 301 apply.

Example (2). If, in the above example, Corporation X distributes 50 shares of stock of Corporation Y to A and 30 shares of such stock plus $100 cash to B without requiring the surrender of any of its own stock, the amount of cash received by B is treated as a distribution of property to which the rules of section 301 apply.

§ 1.356–3 Rules for treatment of securities as "other property".

(a) As a general rule, for purposes of section 356, the term *other property* includes securities. However, it does not include securities permitted under section 354 or section 355 to be received tax free. Thus, when securities are surrendered in a transaction to which section 354 or section 355 is applicable, the characterization of the securities received as ''other property'' does not include securities received where the principal amount of such securities does not exceed the principal amount of securities surrendered in the transaction. If a greater principal amount of securities is received in an exchange described in section 354 (other than subsection (c) or (d) thereof) or section 355 over the principal amount of securities surrendered, the term *other property* includes the fair market value of such excess principal amount as of the date of the exchange. If no securities are surrendered in exchange, the term *other property* includes the fair market value, as of the date of receipt, of the entire principal amount of the securities received.

(b) Except as provided in § 1.356–6T, for purposes of this section, a right to acquire stock that is treated as a security for purposes of section 354 or 355 has no principal amount. Thus, such right is not other property when received in a transaction to which section 356 applies (regardless of whether securities are surrendered in the exchange). This paragraph (b) applies to transactions occurring on or after March 9, 1998.

(c) In the examples in this paragraph (c), stock means common stock and *warrants* means rights to acquire common stock. The following examples illustrate the rules of paragraph (a) of this section:

Example 1. A, an individual, exchanged 100 shares of stock for 100 shares of stock and a security in the principal amount of $1,000 with a fair market value of $990. The amount of $990 is treated as ''other property.''

Example 2. B, an individual, exchanged 100 shares of stock and a security in the principal amount of $1,000 for 300 shares of stock and a security in the principal amount of $1,500. The security had a fair market value on the date of receipt of $1,575. The fair market value of the excess principal amount, or $525, is treated as ''other property.''

Example 3. C, an individual, exchanged a security in the principal amount of $1,000 for 100 shares of stock and a security in the principal amount of $900. No part of the security received is treated as ''other property.''

Example 4. D, an individual, exchanged a security in the principal amount of $1,000 for 100 shares of stock and a security in the principal amount of $1,200 with a fair market value of $1,100. The fair market value of the excess principal amount, or $183.33, is treated as ''other property.''

Example 5. E, an individual, exchanged a security in the principal amount of $1,000 for another security in the principal amount of $1,200 with a fair market value of $1,080. The fair market value of the excess principal amount, or $180, is treated as ''other property.''

Example 6. F, an individual, exchanged a security in the principal amount of $1,000 for two different securities each in the principal amount of $750. One of the securities had a fair market value of $750, the other had a fair market value of $600. One-third of the fair market value of each security ($250 and $200) is treated as ''other property.''

Example 7. G, an individual, exchanged stock for stock and a warrant. The warrant had no principal amount. Thus, G received no excess principal amount within the meaning of section 356(d).

Example 8. H, an individual, exchanged a warrant for stock and a warrant. The warrants had no principal amount. Thus, H received no excess principal amount within the meaning of section 356(d).

Example 9. I, an individual, exchanged a warrant for stock and a debt security. The warrant had no principal amount. The debt security had a $100 principal amount. I received $100 of excess principal amount within the meaning of section 356(d).

[T.D. 6500, 25 FR 11607, Nov. 26, 1960, as amended by T.D. 7616, 44 FR 26869, May 8, 1979; T.D. 8752, 63 FR 410, Jan. 6, 1998]

§ 1.356–4 Exchanges for section 306 stock.

If, in a transaction to which section 356 is applicable, other property or money is received in exchange for section 306 stock, an amount equal to the fair market value of the property plus the money, if any, shall be treated as a distribution of property to which section 301 is applicable. The determination of whether section 306 stock is surrendered for other property (including money) is a question of fact to be decided under all of the circumstances of each case. Ordinarily, the other property (including money) received will first be treated as received in exchange for any section 306 stock owned by a shareholder prior to such transaction. For example, if a shareholder who owns a share of common stock (having a basis to him of $100) and a share of preferred stock which is section 306 stock (having a basis to him of $100) surrenders both shares in a transaction to which section 356 is applicable for one share of common stock having a fair market value of $80 and one $100 bond having a fair market value of $100, the bond will be deemed received in exchange for the section 306 stock and it will be treated as a distribution to which section 301 is applicable to the extent of its entire fair market value ($100).

§ 1.356–5 Transactions involving gift or compensation.

With respect to transactions described in sections 354, 355, or 356, but which—

(a) Result in a gift, see section 2501 and following, and the regulations pertaining thereto, or

(b) Have the effect of the payment of compensation, see section 61(a)(1), and the regulations pertaining thereto.

§ 1.356–6T Rules for treatment of nonqualified preferred stock as "other property" (temporary).

(a) *In general.* For purposes of §§ 1.354–1(e), 1.355–1(c), and 1.356–3(b), the terms *stock* and *securities* do not include—

(1) Nonqualified preferred stock, as defined in section 351(g)(2), received in exchange for (or in a distribution with respect to) stock, or a right to acquire stock, other than nonqualified preferred stock; or

(2) A right to acquire such nonqualified preferred stock, received in exchange for (or in a distribution with respect to) stock, or a right to acquire stock, other than nonqualified preferred stock.

(b) *Exceptions.* The following exceptions apply:

(1) *Certain recapitalizations.* Paragraph (a) of this section does not apply in the case of a recapitalization under section 368(a)(1)(E) of a family-owned corporation as described in section 354(a)(2)(C)(ii)(II).

(2) *Transition rule.* Paragraph (a) of this section does not apply to a transaction described in section 1014(f)(2) of the Taxpayer Relief Act of 1997 (111 Stat. 921).

(c) *Effective date.* This section applies to nonqualified preferred stock, or a right to acquire such stock, received in connection with a transaction occurring on or after March 9, 1998.

[T.D. 8753, 63 FR 411, Jan. 6, 1998]

§ 1.357–1 Assumption of liability.

(a) *General rule.* Section 357(a) does not affect the rule that liabilities assumed are to be taken into account for the purpose of computing the amount of gain or loss realized under section 1001 upon an exchange. Section 357(a) provides, subject to the exceptions and limitations specified in section 357 (b) and (c), that—

(1) Liabilities assumed are not to be treated as ''other property or money'' for the purpose of determining the amount of realized gain which is to be recognized under section 351, 361, 371, or 374, if the transactions would, but for the receipt of ''other property or money'' have been exchanges of the type described in any one of such sections; and

(2) If the only type of consideration received by the transferor in addition to that permitted to be received by section 351, 361, 371, or 374, consists of an assumption of liabilities, the transaction, if otherwise qualified, will be deemed to be within the provisions of section 351, 361, 371, or 374.

(b) *Application of general rule.* The application of paragraph (a) of this section may be illustrated by the following example:

Example. A, an individual, transfers to a controlled corporation property with an adjusted basis of $10,000 in exchange for stock of the corporation with a fair market value of $8,000, $3,000 cash, and the assumption by the corporation of indebtedness of A amounting to $4,000. A's gain is $5,000, computed as follows:

Stock received, fair market value	$8,000
Cash received	3,000
Liability assumed by transferee	4,000
Total consideration received	15,000
Less: Adjusted basis of property transferred	10,000
Gain realized	5,000

Assuming that the exchange falls within section 351 as a transaction in which the gain to be recognized is limited to ''other property or money'' received, the gain recognized to A will be limited to the $3,000 cash received, since, under the general rule of section 357(a), the assumption of the $4,000 liability does not constitute ''other property.''

(c) *Tax avoidance purpose.* The benefits of section 357(a) do not extend to any exchange involving an assumption of liabilities where it appears that the principal purpose of the taxpayer with respect to such assumption was to avoid Federal income tax on the exchange, or, if not such purpose, was not a bona fide business purpose. In such cases, the total amount of liabilities assumed or acquired pursuant to such exchange (and not merely a particular liability with respect to which the tax avoidance purpose existed) shall, for the purpose of determining the amount of gain to be recognized upon the exchange in which the liabilities are assumed or acquired, be treated as money received by the taxpayer upon the exchange. Thus, if in the example set forth in paragraph (b) of this section,

the principal purpose of the assumption of the $4,000 liability was to avoid tax on the exchange, or was not a bona fide business purpose, then the amount of gain recognized would be $5,000. In any suit or proceeding where the burden is on the taxpayer to prove that an assumption of liabilities is not to be treated as ''other property or money'' under section 357, which is the case if the Commissioner determines that the taxpayer's purpose with respect thereto was a purpose to avoid Federal income tax on the exchange or was not a bona fide business purpose, and the taxpayer contests such determination by litigation, the taxpayer must sustain such burden by the clear preponderance of the evidence. Thus, the taxpayer must prove his case by such a clear preponderance of all the evidence that the absence of a purpose to avoid Federal income tax on the exchange, or the presence of a bona fide business purpose, is unmistakable.

[T.D. 6500, 25 FR 11607, Nov. 26, 1960, as amended by T.D. 6528, 26 FR 399, Jan. 19, 1961]

§ 1.357–2 Liabilities in excess of basis.

(a) Section 357(c) provides in general that in an exchange to which section 351 (relating to a transfer to a corporation controlled by the transferor) is applicable, or to which section 361 (relating to the nonrecognition of gain or loss to corporations) is applicable by reason of a section 368(a)(1)(D) reorganization, if the sum of the amount of liabilities assumed plus the amount of liabilities to which the property is subject exceeds the total of the adjusted basis of the property transferred pursuant to such exchange, then such excess shall be considered as a gain from the sale or exchange of a capital asset or of property which is not a capital asset as the case may be. Thus, if an individual transfers, under section 351, properties having a total basis in his hands of $20,000, one of which has a basis of $10,000 but is subject to a mortgage of $30,000, to a corporation controlled by him, such individual will be subject to tax with respect to $10,000, the excess of the amount of the liability over the total adjusted basis of all the properties in his hands. The same result will follow whether or not the liability is assumed by the transferee. The determination of whether a gain resulting from the transfer of capital assets is long-term or short-term capital gain shall be made by reference to the holding period to the transferor of the assets transferred. An exception to the general rule of section 357(c) is made (1) for any exchange as to which under section 357(b) (relating to assumption of liabilities for tax-avoidance purposes) the entire amount of the liabilities is treated as money received and (2) for an exchange to which section 371 (relating to reorganizations in certain receivership and bankruptcy proceedings) or section 374 (relating to gain or loss not recognized in certain railroad reorganizations) is applicable.

(b) The application of paragraph (a) of this section may be illustrated by the following examples:

Example (1). If all such assets transferred are capital assets and if half the assets (ascertained by reference to their fair market value at the time of the transfer) have been held for less than 1 year (6 months for taxable years beginning before 1977; 9 months for taxable years beginning in 1977), and the remaining half for more than 1 year (6 months for taxable years beginning before 1977; 9 months for taxable years beginning in 1977), half the excess of the amount of the liability over the total of the adjusted basis of the property transferred pursuant to the exchange shall be treated as short-term capital gain, and the remaining half shall be treated as long-term capital gain.

Example (2). If half of the assets (ascertained by reference to their fair market value at the time of the transfer) transferred are capital assets and half are assets other than capital assets, then half of the excess of the amount of the liability over the total of the adjusted basis of the property transferred pursuant to the exchange shall be treated as capital gain, and the remaining half shall be treated as gain from the sale or exchange of assets other than capital assets.

[T.D. 6500, 25 FR 11607, Nov. 26, 1960, as amended by T.D. 6528, 26 FR 399, Jan. 19, 1961; T.D. 7728, 45 FR 72650, Nov. 3, 1980]

§ 1.358–1 Basis to distributees.

(a) In the case of an exchange or distribution to which section 354, 355, or 371(b) applies in which, under the law applicable to the year in which the exchange is made, only nonrecognition property is received, the sum of the basis of all of the stock and securities in the corporation whose stock and securities are exchanged or with respect

to which the distribution is made, held immediately after the transaction, plus the basis of all stock and securities received in the transaction shall be the same as the basis of all the stock and securities in such corporation held immediately before the transaction allocated in the manner described in § 1.358–2. In the case of an exchange to which section 351, 361, or 374 applies in which, under the law applicable to the year in which the exchange was made, only nonrecognition property is received, the basis of all the stock and securities received in the exchange shall be the same as the basis of all property exchange therefor. If in an exchange or distribution to which section 351, 356, 361, 371(b), or 374 applies both nonrecognition property and ''other property'' are received, the basis of all the property except ''other property'' held after the transaction shall be determined as described in the preceding two sentences decreased by the sum of the money and the fair market value of the ''other property'' (as of the date of the transaction) and increased by the sum of the amount treated as a dividend (if any) and the amount of the gain recognized on the exchange, but the term *gain* as here used does not include any portion of the recognized gain that was treated as a dividend. In any case in which a taxpayer transfers property with respect to which loss is recognized, such loss shall be reflected in determining the basis of the property received in the exchange. The basis of the ''other property'' is its fair market value as of the date of the transaction.

(b) The application of paragraph (a) of this section may be illustrated by the following example:

Example. A purchased a share of stock in Corporation X in 1935 for $150. Since that date he has received distributions out of other than earnings and profits (as defined in section 316) totalling $60, so that his adjusted basis for the stock is $90. In a transaction qualifying under section 356, A exchanged this share for one share in Corporation Y, worth $100, cash in the amount of $10, and other property with a fair market value of $30. The exchanging had the effect of the distribution of a dividend. A's ratable share of the earnings and profits of Corporation X accumulated after February 28, 1913, was $5. A realized a gain of $50 on the exchange, but the amount recognized is limited to $40, the sum of the cash received and the fair market value of the other property. Of the gain recognized, $5 is taxable as a dividend, and $35 as a gain from the exchange of property. The basis to A of the one share of stock of Corporation Y is $90. That is, the adjusted basis of the one share of stock Corporation X ($90), decreased by the sum of the cash received ($10) and the fair market value of the other property received ($30) and increased by the sum of the amount treated as a dividend ($5) and the amount treated as a gain from the exchange of property ($35). The basis of the other property received is $30.

[T.D. 6500, 25 FR 11607. Nov. 26, 1960, as amended by T.D. 6533, 26 FR 404, Jan. 19, 1965; T.D. 7616, 44 FR 26869, May 8, 1979]

§ 1.358–2 Allocation of basis among nonrecognition property.

(a)(1) As used in this paragraph the term *stock* means stock which is not ''other property'' under section 356 or 371(b), stock with respect to which a distribution is made, and, in the case of a surrender of part of the stock of a particular class, the retained part of such stock. The term *securities* means securities (including, where appropriate, fractional parts of securities) which are not ''other property'' under section 356 or 371(b) and in the case of a surrender of part of the securities of a particular class, the retained part of such securities. Stock, or securities, as the case may be, which differ either because they are in different corporations or because the rights attributable to them differ (although they are in the same corporation) are considered different classes of stock or securities, as the case may be, for purposes of this section.

(2) If as the result of an exchange or distribution under the terms of section 354, 355, 356 or 371(b) a shareholder who owned stock of only one class before the transaction owns stock of two or more classes after the transaction, then the basis of all the stock held before the transaction (as adjusted under § 1.358–1) shall be allocated among the stock of all classes (whether or not such stock was received in the transaction) held immediately after the transaction in proportion to the fair market values of the stock of each class.

(3) If as the result of an exchange under the terms of section 354, 355, 356

or 371(b) a security holder who owned only securities, all of one class, before the transaction, owns securities or stock of more than one class, or owns both stock and securities, then the basis of all the securities held before the transaction (as adjusted under § 1.358–1) shall be allocated among all the stock and securities (whether or not received in the transaction) held immediately after the transaction in proportion to the fair market values of the stock of each class and the securities of each class.

(4) In every case in which, before the transactions, a person owned stock of more than one class or securities of more than one class or owned both stock and securities, a determination must be made, upon the basis of all the facts, of the stock or securities received with respect to stock and securities of each class held (whether or not surrendered). The allocation described in subparagraph (2) of this paragraph shall be separately made as to the stock of each class with respect to which there is an exchange or distribution and the allocation described in subparagraph (3) of this paragraph shall be separately made with respect to the securities of each class, part or all of which are surrendered in the exchange.

(5) Notwithstanding the provisions of subparagraphs (2), (3), and (4) of this paragraph, in any case in which a plan of recapitalization under section 368(a)(1)(E) provides that each holder of stock or securities of a particular class shall have an option to surrender some or none of such stock or securities in exchange for stock or securities, and a shareholder or security holder exchanges an identifiable part of his stock or securities, the basis of the part of the stock or securities retained shall remain unchanged and shall not be taken into account in determining the basis of the stock or securities received.

(b)(1) As used in this paragraph the term *stock* refers only to stock which is not ''other property'' under section 351, 361, or 374 and the term *securities* refers only to securities which are not ''other property'' under section 351, 361, or 374.

(2) If in an exchange to which section 351 or 361 applies property is transferred to a corporation and the transferor receives stock or securities of more than one class or receives both stock and securities, then the basis of the property transferred (as adjusted under § 1.358–1) shall be allocated among all of the stock and securities received in proportion to the fair market values of the stock of each class and the securities of each class.

(c) The application of paragraphs (a) and (b) of this section may be illustrated by the following examples:

Example (1). A, an individual, owns stock in Corporation X with an adjusted basis of $1,000. In a transaction qualifying under section 356 (so far as such section relates to section 354), he exchanged this stock for 20 shares of stock of Corporation Y worth $1,200 and securities of Corporation Y worth $400. A realizes a gain of $600 of which $400 is recognized. The adjusted basis in A's hands of each share of the stock of Corporation Y is $50 determined by allocating the basis of the stock of Corporation X ratably to the stock of Corporation Y received in the exchange. The securities of Corporation Y have a basis in the hands of A of $400.

Example (2). B, an individual, owns a security in the principal amount of $10,000 with a basis of $5,000. In a transaction to which section 354 is applicable, he exchanges this security for four securities in the principal amount of $750 each, worth $800 each, four securities in the principal amount of $750 each, worth $600 each, class A common stock worth $1,000, and class B common stock worth $400. B realizes a gain of $2,000, none of which is recognized. The basis of his original security, $5,000, will be allocated 32/70ths to the four securities worth $800, 24/70ths to the four securities worth $600, 10/70ths to the class A common stock, and 4/70ths to the class B common stock.

Example (3). C, an individual, owns stock of Corporation Y with a basis of $5,000 and owns a security issued by Corporation Y in the principal amount of $5,000 with a basis of $5,000. In a transaction to which section 354 is applicable, he exchanges the stock of Corporation Y for stock of Corporation Z with a value of $6,000, and he exchanges the security of Corporation Y for stock of Corporation Z worth $1,500 and a security of Corporation Z in the principal amount of $4,500 worth $4,500. No gain is recognized to C on either exchange. The basis of the stock of Corporation Z received for the stock of Corporation Y is $5,000. The bases of the stock and security of Corporation Z received in exchange for the security of Corporation Y are $1,250 and $3,750, respectively.

Example (4). D, an individual, owns stock in Corporation M with a basis of $15,000, worth

$40,000, and owns a security issued by Corporation M in the principal amount of $5,000 with a basis of $4,000. In a transaction qualifying under section 356 (so far as such section relates to section 355), he exchanges the security of Corporation M for a security of Corporation O (a controlled corporation) in the principal amount of $5,000, worth $5,000, and exchanges one-half of his stock of Corporation M for stock of Corporation O worth $15,000 and a security of Corporation O in the principal amount of $5,000, worth $5,000. All of the stock and securities of Corporation O are distributed pursuant to the transaction. D realizes a gain of $12,500 on the exchange of the stock of Corporation M for the stock and security of Corporation O of which $5,000 is recognized. D also realizes a gain of $1,000 on the exchange of a security of Corporation M for a security of Corporation O, none of which is recognized. The basis of his stock of Corporation M held before the transaction is allocated 20/35ths to the stock of Corporation M held after the transaction and 15/35ths to the stock of Corporation O. The basis of the security of Corporation O received in exchange for his security of Corporation M is $4,000, the basis of the security of Corporation M exchanged. The basis of the security of Corporation O received with respect to D's stock of Corporation M is $5,000, its fair market value.

[T.D. 6500, 25 FR 11607, Nov. 26, 1960, as amended by T.D. 7616, 44 FR 26869, May 8, 1979; T.D. 8648, 60 FR 66079, Dec. 21, 1995]

§ 1.358–3 Treatment of assumption of liabilities.

(a) For purposes of section 358, where a party to the exchange assumes a liability of a distributee or acquires from him property subject to a liability, the amount of such liability is to be treated as money received by the distributee upon the exchange, whether or not the assumption of liabilities resulted in a recognition of gain or loss to the taxpayer under the law applicable to the year in which the exchange was made.

(b) The application of paragraph (a) of this section may be illustrated by the following examples:

Example (1). A, an individual, owns property with an adjusted basis of $100,000 on which there is a purchase money mortgage of $25,000. On December 1, 1945, A organizes Corporation X to which he transfers the property in exchange for all the stock of Corporation X and the assumption by Corporation X of the mortgage. The capital stock of the Corporation X has a fair market value of $150,000. Under sections 351 and 357, no gain or loss is recognized to A. The basis in A's hands of the stock of Corporation X is $75,000, computed as follows:

Adjusted basis of property transferred	$100,000
Less: Amount of money received (amount of liabilities assumed)	—25,000
Basis of Corporation X stock to A	75,000

Example (2). A, an individual, owns property with an adjusted basis of $25,000 on which there is a mortgage of $50,000. On December 1, 1954, A organizes Corporation X to which he transfers the property in exchange for all the stock of Corporation X and the assumption by Corporation X of the mortgage. The stock of Corporation X has a fair market value of $50,000. Under sections 351 and 357, gain is recognized to A in the amount of $25,000. The basis in A's hands of the stock of Corporation X is zero, computed as follows:

Adjusted basis of property transferred	$25,000
Less: Amount of money received (amount of liabilities)	—50,000
Plus: Amount of gain recognized to taxpayer	25,000
Basis of Corporation X stock to A	0

§ 1.358–4 Exceptions.

(a) *Plan of reorganization adopted after October 22, 1968.* In the case of a plan of reorganization adopted after October 22, 1968, section 358 does not apply in determining the basis of property acquired by a corporation in connection with such reorganization by the exchange of its stock or securities (or by the exchange of stock or securities of a corporation which is in control of the acquiring corporation) as the consideration in whole or in part for the transfer of the property to it. See section 362 and the regulations pertaining to that section for rules relating to basis to corporations of property acquired in such cases.

(b) *Plan of reorganization adopted before October 23, 1968.* In the case of a plan of reorganization adopted before October 23, 1968, section 358 does not apply in determining the basis of property acquired by a corporation in connection with such reorganization by the issuance of stock or securities of such corporation (or by the issuance of stock or securities of another corporation which is in control of such corporation) as the consideration in whole or in part for the transfer of the property to it. The term *issuance of stock or securities* includes any transfer of stock

or securities, including stock or securities which were purchased or were acquired as a contribution to capital. See section 362 and the regulations pertaining to that section for rules relating to basis to corporations of property acquired in such cases.

[T.D. 7422, 41 FR 26569, June 28, 1976]

§ 1.358–5 [Reserved]

§ 1.358–6 Stock basis in certain triangular reorganizations.

(a) *Scope.* This section provides rules for computing the basis of a controlling corporation in the stock of a controlled corporation as the result of certain reorganizations involving the stock of the controlling corporation as described in paragraph (b) of this section. The rules of this section are in addition to rules under other provisions of the Internal Revenue Code and principles of law. See, e.g., section 1001 for the recognition of gain or loss by the controlled corporation on the exchange of property for the assets or stock of a target corporation in a reorganization described in section 368.

(b) *Triangular reorganizations*—(1) *Nomenclature.* For purposes of this section—

(i) *P* is a corporation—

(A) That is a party to a reorganization,

(B) That is in control (within the meaning of section 368(c)) of another party to the reorganization, and

(C) Whose stock is transferred pursuant to the reorganization.

(ii) *S* is a corporation—

(A) That is a party to the reorganization, and

(B) That is controlled by *P*.

(iii) *T* is a corporation that is another party to the reorganization.

(2) *Definitions of triangular reorganizations.* This section applies to the following reorganizations (which are referred to collectively as *triangular reorganizations*):

(i) *Forward triangular merger.* A forward triangular merger is a statutory merger of *T* and *S*, with *S* surviving, that qualifies as a reorganization under section 368(a)(1)(A) or (G) by reason of the application of section 368(a)(2)(D).

(ii) *Triangular C reorganization.* A triangular C reorganization is an acquisition by *S* of substantially all of *T*'s assets in exchange for *P* stock in a transaction that qualifies as a reorganization under section 368(a)(1)(C).

(iii) *Reverse triangular merger.* A reverse triangular merger is a statutory merger of *S* and *T*, with *T* surviving, that qualifies as a reorganization under section 368(a)(1)(A) by reason of the application of section 368(a)(2)(E).

(iv) *Triangular B reorganization.* A triangular B reorganization is an acquisition by *S* of *T* stock in exchange for P stock in a transaction that qualifies as a reorganization under section 368(a)(1)(B).

(c) *General rules.* Subject to the special rule provided in paragraph (d) of this section, *P*'s basis in the stock of *S* or *T*, as applicable, as a result of a triangular reorganization, is adjusted under the following rules—

(1) *Forward triangular merger or triangular C reorganization*—(i) *In general.* In a forward triangular merger or a triangular C reorganization, *P*'s basis in its *S* stock is adjusted as if—

(A) *P* acquired the *T* assets acquired by *S* in the reorganization (and *P* assumed any liabilities which *S* assumed or to which the *T* assets acquired by *S* were subject) directly from *T* in a transaction in which *P*'s basis in the *T* assets was determined under section 362(b); and

(B) *P* transferred the *T* assets (and liabilities which *S* assumed or to which the *T* assets acquired by *S* were subject) to *S* in a transaction in which *P*'s basis in *S* stock was determined under section 358.

(ii) *Limitation.* If, in applying section 358, the amount of *T* liabilities assumed by *S* or to which the *T* assets acquired by *S* are subject equals or exceeds *T*'s aggregate adjusted basis in its assets, the amount of the adjustment under paragraph (c)(1)(i) of this section is zero. *P* recognizes no gain under section 357(c) as a result of a triangular reorganization.

(2) *Reverse triangular merger*—(i) *In general*—(A) *Treated as a forward triangular merger.* Except as otherwise provided in this paragraph (c)(2), *P*'s basis in its *T* stock acquired in a reverse triangular merger equals its basis in its *S* stock immediately before the transaction adjusted as if *T* had merged

into *S* in a forward triangular merger to which paragraph (c)(1) of this section applies.

(B) *Allocable share.* If *P* acquires less than all of the *T* stock in the transaction, the basis adjustment described in paragraph (c)(2)(i)(A) of this section is reduced in proportion to the percentage of *T* stock not acquired in the transaction. The percentage of *T* stock not acquired in the transaction is determined by taking into account the fair market value of all classes of *T* stock.

(C) *Special rule if P owns T stock before the transaction.* Solely for purposes of paragraphs (c)(2)(i)(A) and (B) of this section, if *P* owns *T* stock before the transaction, *P* may treat that stock as acquired in the transaction or not, without regard to the form of the transaction.

(ii) *Reverse triangular merger that qualifies as a section 351 transfer or section 368(a)(1)(B) reorganization.* Notwithstanding paragraph (c)(2)(i) of this section, if a reorganization qualifies as both a reverse triangular merger and as a section 351 transfer or as both a reverse triangular merger and a reorganization under section 368(a)(1)(B), *P* can—

(A) Determine the basis in its *T* stock as if paragraph (c)(2)(i) of this section applies; or

(B) Determine the basis in the *T* stock acquired as if *P* acquired such stock from the former *T* shareholders in a transaction in which *P*'s basis in the *T* stock was determined under section 362(b).

(3) *Triangular B reorganization.* In a triangular B reorganization, *P*'s basis in its *S* stock is adjusted as if—

(i) *P* acquired the *T* stock acquired by *S* in the reorganization directly from the *T* shareholders in a transaction in which *P*'s basis in the *T* stock was determined under section 362(b); and

(ii) *P* transferred the *T* stock to *S* in a transaction in which *P*'s basis in its *S* stock was determined under section 358.

(4) *Examples.* The rules of this paragraph (c) are illustrated by the following examples. For purposes of these examples, *P*, *S*, and *T* are domestic corporations, *P* and *S* do not file consolidated returns, *P* owns all of the only class of *S* stock, the *P* stock exchanged in the transaction satisfies the requirements of the applicable triangular reorganization provisions, and the facts set forth the only corporate activity.

Example 1. Forward triangular merger. (a) *Facts.* T has assets with an aggregate basis of $60 and fair market value of $100 and no liabilities. Pursuant to a plan, *P* forms *S* with $5 cash (which S retains), and *T* merges into *S*. In the merger, the *T* shareholders receive *P* stock worth $100 in exchange for their *T* stock. The transaction is a reorganization to which sections 368(a)(1)(A) and (a)(2)(D) apply.

(b) *Basis adjustment.* Under § 1.358–6(c)(1), *P*'s $5 basis in its *S* stock is adjusted as if *P* acquired the *T* assets acquired by *S* in the reorganization directly from *T* in a transaction in which *P*'s basis in the *T* assets was determined under section 362(b). Under section 362(b), *P* would have an aggregate basis of $60 in the *T* assets. *P* is then treated as if it transferred the *T* assets to *S* in a transaction in which *P*'s basis in the *S* stock was determined under section 358. Under section 358, *P*'s $5 basis in its *S* stock would be increased by the $60 basis in the *T* assets deemed transferred. Consequently, *P* has a $65 basis in its *S* stock as a result of the reorganization.

(c) *Use of pre-existing S.* The facts are the same as paragraph (a) of this *Example 1,* except that *S* is an operating company with substantial assets that has been in existence for several years. *P* has a $110 basis in the *S* stock. Under § 1.358–6(c)(1), *P*'s $110 basis in its *S* stock is increased by the $60 basis in the *T* assets deemed transferred. Consequently, *P* has a $170 basis in its *S* stock as a result of the reorganization.

(d) *Mixed consideration.* The facts are the same as paragraph (a) of this *Example 1,* except that the *T* shareholders receive *P* stock worth $80 and $20 cash from *P*. Under section 358, *P*'s $5 basis in its *S* stock is increased by the $60 basis in the *T* assets deemed transferred. Consequently, *P* has a $65 basis in its *S* stock as a result of the reorganization.

(e) *Liabilities.* The facts are the same as paragraph (a) of this *Example 1,* except that *T*'s assets are subject to $50 of liabilities, and the *T* shareholders receive $50 of *P* stock in exchange for their *T* stock. Under section 358, *P*'s basis in its *S* stock is increased by the $60 basis in the *T* assets deemed transferred and decreased by the $50 of liabilities to which the *T* assets acquired by *S* are subject. Consequently, *P* has a net basis adjustment of $10, and a $15 basis in its *S* stock as a result of the reorganization.

(f) *Liabilities in excess of basis.* The facts are the same as in paragraph (a) of this *Example 1,* except that *T*'s assets are subject to liabilities of $90, and the *T* shareholders receive $10 of *P* stock in exchange for their *T* stock in the reorganization. Under § 1.358–6(c)(1)(ii),

the adjustment under § 1.358–6(c) is zero if the amount of the liabilities which *S* assumed or to which the *T* assets acquired by *S* are subject exceeds the aggregate adjusted basis in *T*'s assets. Consequently, *P* has no adjustment in its *S* stock, and *P* has a $5 basis in its *S* stock as a result of the reorganization.

Example 2. Reverse triangular merger.(a) *Facts.* *T* has assets with an aggregate basis of $60 and a fair market value of $100 and no liabilities. *P* has a $110 basis in its *S* stock. Pursuant to a plan, *S* merges into *T* with *T* surviving. In the merger, the *T* shareholders receive $10 cash from *P* and *P* stock worth $90 in exchange for their *T* stock. The transaction is a reorganization to which sections 368(a)(1)(A) and (a)(2)(E) apply.

(b) *Basis adjustment.* Under § 1.358–6(c)(2)(i)(A), *P*'s basis in the *T* stock acquired is *P*'s $110 basis in its *S* stock before the transaction, adjusted as if *T* had merged into *S* in a forward triangular merger to which § 1.358–6(c)(1) applies. In such a case, *P*'s $110 basis in its *S* stock before the transaction would have been increased by the $60 basis of the *T* assets deemed transferred. Consequently, *P* has a $170 basis in its *T* stock immediately after the transaction.

(c) *Reverse triangular merger that also qualifies under section 368(a)(1)(B).* The facts relating to *T* are the same as in paragraph (a) of this *Example 2. P*, however, forms *S* pursuant to the plan of reorganization. The *T* shareholders receive $100 worth of *P* stock (and no cash) in exchange for their *T* stock. The *T* shareholders have an aggregate basis in their *T* stock of $85 immediately before the reorganization. The reorganization qualifies as both a reverse triangular merger and a reorganization under section 368(a)(1)(B). Under § 1.358–6(c)(2)(ii), *P* may determine its basis in its *T* stock either as if § 1.358–6(c)(2)(i) applied to the *T* stock acquired, or as if *P* acquired the *T* stock from the former *T* shareholders in a transaction in which *P*'s basis in the *T* stock was determined under section 362(b). Accordingly, *P* may determine a basis in its *T* stock of $60 (*T*'s net asset basis) or $85 (the *T* shareholders' aggregate basis in the *T* stock immediately before the reorganization).

(d) *Allocable share in a reverse triangular merger.* The facts are the same as in paragraph (a) of this *Example 2*, except that *X*, a 10% shareholder of *T*, does not participate in the transaction. The remaining *T* shareholders receive $10 cash from *P* and *P* stock worth $80 for their *T* stock. *P* owns 90% of the *T* stock after the transaction. Under § 1.358–6(c)(2)(i)(A), *P*'s basis in its *T* stock is *P*'s $110 basis in its *S* stock before the reorganization, adjusted as if *T* had merged into *S* in a forward triangular merger. In such a case, *P*'s basis would have been adjusted by the $60 basis in the *T* assets deemed transferred. Under § 1.358–6(c)(2)(i)(B), however, the basis adjustment determined under § 1.358–6(c)(2)(i)(A) is reduced in proportion to the percentage of *T* stock not acquired by *P* in the transaction. The percentage of *T* stock not acquired in the transaction is 10%. Therefore, *P* reduces its $60 basis adjustment by 10%, resulting in a net basis adjustment of $54. Consequently, *P* has a $164 basis in its *T* stock as a result of the transaction.

(e) *P's ownership of T stock.* The facts are the same as in paragraph (a) of this *Example 2*, except that *P* owns 10% of the *T* stock before the transaction. *P*'s basis in that *T* stock is $8. All the *T* shareholders other than *P* surrender their *T* stock for $10 cash from *P* and *P* stock worth $80. *P* does not surrender the stock in the transaction. Under § 1.358–6(c)(2)(i)(C), *P* may treat its *T* stock owned before the transaction as acquired in the transaction or not. If *P* treats that *T* stock as acquired in the transaction, *P*'s basis in that *T* stock and the *T* stock actually acquired in the transaction equals *P*'s $110 basis in its *S* stock before the transaction, adjusted by the $60 basis of the *T* assets deemed transferred, for a total basis of $170. If *P* treats its *T* stock as not acquired, *P* retains its $8 pre-transaction basis in that stock. *P*'s basis in its other *T* shares equals *P*'s $110 basis in its *S* stock before the transaction, adjusted by $54 (the $60 basis in the *T* assets deemed transferred, reduced by 10%), for a total basis of $164 in those shares. See § 1.358–6(c)(2)(i)(A) and (B). Consequently, if *P* treats its *T* shares as not acquired, *P*'s total basis in all of its *T* shares is $172.

Example 3. Triangular B reorganization.(a) *Facts.* *T* has assets with a fair market value of $100 and no liabilities. The *T* shareholders have an aggregate basis in their *T* stock of $85 immediately before the reorganization. Pursuant to a plan, *P* forms *S* with $5 cash and *S* acquires all of the *T* stock in exchange for $100 of *P* stock. The transaction is a reorganization to which section 368(a)(1)(B) applies.

(b) *Basis adjustment.* Under § 1.358–6(c)(3), *P* adjusts its $5 basis in its *S* stock by treating *P* as if it acquired the *T* stock acquired by *S* in the reorganization directly from the *T* shareholders in exchange for the *P* stock in a transaction in which *P*'s basis in the *T* stock was determined under section 362(b). Under section 362(b), *P* would have an aggregate basis of $85 in the *T* stock received by *S* in the reorganization. *P* is then treated as if it transferred the *T* stock to *S* in a transaction in which *P*'s basis in the *S* stock was determined under section 358. Under section 358, *P*'s basis in its *S* stock would be increased by the $85 basis in the *T* stock deemed transferred. Consequently, *P* has a $90 basis in its *S* stock as a result of the reorganization.

(d) *Special rule for consideration not provided by P*—(1) *In general.* The amount of *P*'s adjustment to basis in

its *S* or *T* stock, as applicable, described in paragraph (c) of this section is decreased by the fair market value of any consideration (including *P* stock in which gain or loss is recognized, see § 1.1032–2(c)) that is exchanged in the reorganization and that is not provided by *P* pursuant to the plan of reorganization. This paragraph (d) does not apply to the amount of *T* liabilities assumed by *S* or to which the *T* assets acquired by *S* are subject under paragraph (c)(1) of this section (or deemed assumed or taken subject to by *S* under paragraph (c)(2)(i) of this section).

(2) *Limitation.* *P* makes no adjustment to basis under this section if the decrease required under paragraph (d)(1) of this section equals or exceeds the amount of the adjustment described in paragraph (c) of this section.

(3) *Example.* The rules of this paragraph (d) are illustrated by the following example. For purposes of this example, *P*, *S*, and *T* are domestic corporations, *P* and *S* do not file consolidated returns, *P* owns all of the only class of *S* stock, the *P* stock exchanged in the transaction satisfies the requirements of the applicable triangular reorganization provisions, and the facts set forth the only corporate activity.

Example. (a)*Facts.* T has assets with an aggregate basis of $60 and fair market value of $100 and no liabilities. *S* is an operating company with substantial assets that has been in existence for several years. *P* has a $100 basis in its *S* stock. Pursuant to a plan, *T* merges into *S* and the *T* shareholders receive $70 of *P* stock provided by *P* pursuant to the plan and $30 of cash provided by *S* in exchange for their *T* stock. The transaction is a reorganization to which sections 368(a)(1)(A) and (a)(2)(D) apply.

(b) *Basis adjustment.* Under § 1.358–6(c)(1), *P*'s $100 basis in its *S* stock is increased by the $60 basis in the *T* assets deemed transferred. Under § 1.358–6(d)(1), the $60 adjustment is decreased by the $30 of cash provided by *S* in the reorganization. Consequently, *P* has a net adjustment of $30 in its *S* stock, and *P* has a $130 basis in its *S* stock as a result of the reorganization.

(c) *Appreciated asset.* The facts are the same as in paragraph (a) of this *Example,* except that in the reorganization *S* provides an asset with a $20 adjusted basis and $30 fair market value instead of $30 of cash. The basis results are the same as in paragraph (b) of this *Example.* In addition, *S* recognizes $10 of gain under section 1001 on its disposition of the asset in the reorganization.

(d) *Depreciated asset.* The facts are the same as in paragraph (c) of this *Example,* except that *S* has a $60 adjusted basis in the asset. The basis results are the same as in paragraph (b) of this *Example.* In addition, *S* recognizes $30 of loss under section 1001 on its disposition of the asset in the reorganization.

(e) *P stock.* The facts are the same as in paragraph (a) of this *Example,* except that in the reorganization *S* provides *P* stock with a fair market value of $30 instead of $30 of cash. *S* acquired the *P* stock in an unrelated transaction several years before the reorganization. *S* has a $20 adjusted basis in the *P* stock. The basis results are the same as in paragraph (b) of this *Example.* In addition, *S* recognizes $10 of gain on its disposition of the *P* stock in the reorganization. See § 1.1032–2(c).

(e) *Cross-reference.* For rules relating to stock basis adjustments made as a result of a triangular reorganization in which *P* and *S*, or *P* and *T*, as applicable, are, or become, members of a consolidated group, see § 1.1502–30. For rules relating to stock basis adjustments after a group structure change, see § 1.1502–31.

(f) *Effective dates*—(1) *General rule.* Except as otherwise provided in this paragraph (f), this section applies to triangular reorganizations occurring on or after December 23, 1994.

(2) *Special rule for reverse triangular mergers.* For a reverse triangular merger occurring before December 23, 1994, *P* may—

(i) Determine the basis in its *T* stock as if paragraph (c)(2)(i) of this section applied; or

(ii) Determine the basis in its *T* stock acquired as if *P* acquired such stock from the former *T* shareholders in a transaction in which *P*'s basis in the *T* stock was determined under section 362(b).

[T.D. 8648, 60 FR 66079, Dec. 21, 1995; 61 FR 11547, Mar. 21, 1996]

EFFECTS ON CORPORATION

§ 1.361–1 Nonrecognition of gain or loss to corporations.

Section 361 provides the general rule that no gain or loss shall be recognized if a corporation, a party to a reorganization, exchanges property in pursuance of the plan of reorganization solely for stock or securities in another

corporation, a party to the reorganization. This provision includes only stock and securities received in connection with a reorganization defined in section 368(a). It also includes nonvoting stock and securities in a corporation, a party to a reorganization, received in a transaction to which section 368(a)(1)(C) is applicable only by reason of section 368(a)(2)(B).

§ 1.362–1 Basis to corporations.

(a) *In general.* Section 362 provides, as a general rule, that if property was acquired on or after June 22, 1954, by a corporation (1) in connection with a transaction to which section 351 (relating to transfer of property to corporation controlled by transferor) applies, (2) as paid-in surplus or as a contribution to capital, or (3) in connection with a reorganization to which part III, subchapter C, chapter 1 of the Code applies, then the basis shall be the same as it would be in the hands of the transferor, increased in the amount of gain recognized to the transferor on such transfer. (See also § 1.362–2.)

(b) *Exceptions.* (1) In the case of a plan of reorganization adopted after October 22, 1968, section 362 does not apply if the property acquired in connection with such reorganization consists of stock or securities in a corporation a party to the reorganization, unless acquired by the exchange of stock or securities of the transferee (or of a corporation which is in control of the transferee) as the consideration in whole or in part for the transfer.

(2) In the case of a plan of reorganization adopted before October 23, 1968, section 362 does not apply if the property acquired in connection with such reorganization consists of stock or securities in a corporation a party to the reorganization, unless acquired by the issuance of stock or securities of the transferee (or, in the case of transactions occurring after December 31, 1963, of a corporation which is in control of the transferee) as the consideration in whole or in part for the transfer. The term *issuance of stock or securities* includes any transfer of stock or securities, including stock or securities which were purchased or were acquired as a contribution to capital.

[T.D. 7422, 41 FR 26569, June 28, 1976]

§ 1.362–2 Certain contributions to capital.

The following regulations shall be used in the application of section 362(c):

(a) Property deemed to be acquired with contributed money shall be that property, if any, the acquisition of which was the purpose motivating the contribution;

(b) In the case of an excess of the amount of money contributed over the cost of the property deemed to be acquired with such money (as defined in paragraph (a) of this section) such excess shall be applied to the reduction of the basis (but not below zero) of other properties held by the corporation, on the last day of the 12-month period beginning on the day the contribution is received, in the following order—

(1) All property of a character subject to an allowance for depreciation (not including any properties as to which a deduction for amortization is allowable),

(2) Property with respect to which a deduction for amortization is allowable,

(3) Property with respect to which a deduction for depletion is allowable under section 611 but not under section 613, and

(4) All other remaining properties.

The reduction of the basis of each of the properties within each of the above categories shall be made in proportion to the relative bases of such properties.

(c) With the consent of the Commissioner, the taxpayer may, however, have the basis of the various units of property within a particular category adjusted in a manner different from the general rule set forth in paragraph (b) of this section. Variations from such rule may, for example, involve adjusting the basis of only certain units of the taxpayer's property within a given category. A request for variations from the general rule should be filed by the taxpayer with its return for the taxable year for which the transfer of the property has occurred.

§ 1.367(a)–1T Transfers to foreign corporations subject to section 367(a): In general (temporary).

(a) *Purpose and scope of regulations.* These regulations set forth rules relating to the provisions of section 367(a) concerning certain transfers of property to foreign corportions. This section provides general rules explaining the effect of section 367(a)(1) and describing the transfers of property that are subject to the rule of that section. Section 1.367(a)–2T provides rules concerning the exception from the rule of section 367(a)(1) for transfers of property to be used in the active conduct of a trade or business outside of the United States. Rules concerning the application of section 367(a)(1) to transfers of stock or securities are provided in § 1.367(a)–3T, while § 1.367(a)–4T provides special rules regarding other specified transfers of property. Section 1.367(a)–5T describes types of property that are subject to the rule of section 367(a)(1) regardless of whether they are transferred for use in a trade or business. Section 1.367(a)–6T provides rules concerning the application of section 367(a) to the transfer of a branch with previously deducted losses. Finally, § 1.367(a)–7T contains transitional rules concerning transfers of intangible property to foreign corporations made after June 6, 1984 and before January 1, 1985. Rules explaining the operation of section 367(d), concerning transfers of intangible property pursuant to an exchange described in section 351 or 361, are provided in § 1.367(d)–1T. Rules concerning the reporting requirements of section 6038B are provided in § 1.6038B–1T.

(b) *General rules*—(1) *Foreign corporation not considered a corporation for purposes of certain transfers.* If a U.S. person transfers property to a foreign corporation in connection with an exchange described in section 332, 351, 354, 355, 356, or 361, then pursuant to section 367(a)(1) the foreign corporation shall not be considered to be a corporation for purposes of determining the extent to which gain shall be recognized on the transfer. Section 367(a)(1) denies nonrecognition treatment only to transfers of items of property on which gain is realized. Thus, the amount of gain recognized because of section 367(a)(1) is unaffected by the transfer of items of property on which loss is realized (but not recognized). The transfers of property that are subject to section 367(a)(1) are further described in paragraph (c) of this section, and relevant definitions are provided in paragraph (d) of this section.

(2) *Cases in which foreign corporate status is not disregarded.* Section 367(a)(1) shall not apply, and a foreign corporate transferee shall, thus, be considered to be a corporation, in the case of any of the following:

(i) The transfer of stock or securities of a foreign corporation which is a party to the exchange or reorganization (as defined in section 368 (b));

(ii) The transfer of property for use in the active conduct of a trade or business outside of the United States in accordance with the rules of §§ 1.367(a)-2T through 1.367(a)-6T; or

(iii) Certain other transfers of property described in §§ 1.367(a)-2T through 1.367(a)-6T.

For the treatment of a transfer of stock or securities of a foreign corporation which is a party to the exchange or reorganization, see §§ 1.367(a)-3T(b)(1), 7.367(b)-4, and 7.367(b)-7.

(3) *Limitation of gain required to be recognized*—(i) *In general.* If a U.S. person transfers property to a foreign corporation in a transaction on which gain is required to be recognized under section 367(a) and regulations thereunder, then the gain required to be recognized by the U.S. person shall in no event exceed the gain that would have been recognized on a taxable sale of those items of property if sold individually and without offsetting individual losses against individual gains.

(ii) *Losses.* No loss may be recognized by reason of the operation of section 367.

(iii) *Ordinary income and capital gain.* If section 367(a) and regulations thereunder require the recognition of ordinary income and capital gain in excess of the limitation described in paragraph (b)(3)(i) of this section, then the limitation shall be imposed by making proportionate reductions in the amounts or ordinary income and capital gain, regardless of the character of the gain that would have been recognized on a taxable sale of the property.

(4) *Character, source, and adjustments*—(i) *In general.* If a U.S. person is required to recognize gain under section 367 upon a transfer of property to a foreign corporation, then—

(A) The character and source of such gain shall be determined as if the property had been disposed of in a taxable exchange with the transferee foreign corporation (unless otherwise provided by regulation); and

(B) Appropriate adjustments to earnings and profits, basis, and other affected items shall be made according to otherwise applicable rules, taking into account the gain recognized because of section 367(a)(1). Any increase in the basis of the property received by the foreign corporation resulting from the application of section 367(a) and section 362 (a) or (b) shall be allocated over the transferred property with respect to which gain is recognized in proportion to the amount realized by the U.S. person on the transfer of each item of that property. See paragraph (c)(3) of this section for special rules applicable to transfers of partnership interests.

(ii) *Example.* The rules of this paragraph (b)(4) are illustrated by the following example.

Example. Domestic corporation DC transfers inventory with a fair market value of $1 million and adjusted basis of $800,000 to foreign corporation FC in an exchange for stock of FC that is described in section 351 (a). Title passes within the U.S. Pursuant to section 367(a), DC is required to recognize gain of $200,000 upon the transfer. Under the rule of this paragraph (b)(4), such gain shall be treated as ordinary income (sections 1201 and 1221) from sources within the U.S. (section 861) arising from a taxable exchange with FC. Appropriate adjustments to earnings and profits, basis, etc., shall be made as if the transfer were subject to section 351. Thus, for example, DC's basis in the FC stock received, and FC's basis in the transferred inventory, will each be increased by the $200,000 gain recognized by DC, pursuant to sections 358(a)(1) and 362(a), respectively.

(c) *Transfers described in section 367(a)(1)*—(1) *In general.* A transfer described in section 367(a)(1) is any transfer of property by a U.S. person to a foreign corporation pursuant to an exchange described in section 332, 351, 354, 355, 356, or 361. Section 367(a)(1) applies to such a transfer whether it is made directly, indirectly, or constructively. Indirect or constructive transfers that are described in section 367(a)(1) include the transfers described in subparagraphs (2) through (7) of this paragraph (c). See § 1.367(a)–3T(b)(1) for rules relating to the transfer of stock or securities of a foreign corporation that is a party to the exchange or the reorganization.

(2) *Indirect transfers in certain reorganizations*—(i) *Mergers described in section 368(a)(1)(A)*—(A) *In general.* A transfer in connection with a reorganization described in section 368(a)(1)(A) to which either section 368(a)(2)(D) or (E) applies may be an indirect transfer described in section 367(a)(1) if the reorganization involves the merger of two domestic corporations and if stock of a foreign corporation which controls one of such domestic corporations is exchanged in the reorganization. The transfers in connection with such a reorganization that are described in section 367(a)(1) are specified in subdivisions (B) and (C) of this paragraph (c)(2)(i). If a transfer in connection with such a reorganization is described in section 367(a)(1), then the rules of § 1.367(a)–3T shall apply to determine whether the U.S. transferor is required to recognize gain with respect to the transfer.

(B) *Mergers to which section 368(a)(2)(D) applies.* A U.S. shareholder of a domestic corporation shall be considered to make a transfer of stock that is described in section 367(a)(1) if—

(*1*) The domestic corporation transfers substantially all of its properties to another domestic corporation in connection with a reorganization described in section 368(a)(1)(A) to which section 368(a)(2)(D) applies; and

(*2*) The controlling corporation (within the meaning of section 368(a)(2)(D)) is a foreign corporation.

The indirect transfer of stock by the shareholder shall be subject to the provisions of § 1.367(a)–3T.

Example F, a foreign corporation, owns all the stock of S, a domestic corporation. In a reorganization described in section 368(a)(1)(A) to which section 368(a)(2)(D) applies, S acquires substantially all the properties of W, a domestic corporation, in a merger of W into S. The stock of F is used as

consideration. The reorganization is considered to constitute a transfer of stock described in section 367(a)(1) by the shareholders of W that are U.S. persons.

(C) *Mergers described in section 368(a)(1)(A) to which section 368(a)(2)(E) applies.* A shareholder of a domestic corporation that is a U.S. person shall be considered to make a transfer of stock that is described in section 367(a)(1) if—

(*1*) The domestic corporation acquires substantially all of the properties of another domestic corporation in connection with a reorganization described in section 368(a)(1)(A) to which section 368(a)(2)(E) applies; and

(*2*) The controlling corporation (within the meaning of section 368(a)(2)(E)) is a foreign corporation.

The indirect transfer of stock by the shareholder shall be subject to the provisions of § 1.367(a)–3T.

(ii) *Reorganizations described in section 368(a)(1)(B).* If, in connection with a reorganization described in section 368(a)(1)(B), a U.S. person exchanges stock of a domestic corporation for voting stock of a foreign corporation that is in control (as defined in section 368(c)) of the domestic acquiring corporation, then that U.S. person is considered to make a transfer of stock that is subject to section 367(a)(1). The rule of this paragraph (c)(2)(ii) is illustrated by the following example.

Example F, a foreign corporation, owns all the stock of S, a domestic corporation. In a reorganization described in section 368(a)(1)(B), S acquires all the stock of domestic corporation Y, and the shareholders of Y receive voting stock of F. The reorganization includes an indirect stock transfer described in section 367(a)(1) by those shareholders of Y who are U.S. persons.

(iii) *Reorganization described in section 368(a)(1)(C).* A U.S. shareholder of a domestic corporation shall be considered to make a transfer of stock that is subject to section 367(a)(1) if—

(A) The domestic corporation transfers substantially all of its properties to another domestic corporation in connection with a reorganization described in section 368(a)(1)(C); and

(B) The domestic corporation receives voting stock in a foreign corporation that is in control (as defined in section 368(c)) of the acquiring corporation (and distributes the stock to its shareholders in accordance with section 368(a)(2)(G)).

The rule of this paragraph (c)(2)(iii) is illustrated by the following example.

Example F, a foreign corporation, owns all of the stock of S, a domestic corporation. In a reorganization described in section 368(a)(1)(C), S acquires substantially all of the properties of Z, a domestic corporation, and Z receives voting stock of F (and distributes the stock to its shareholders). The reorganization is considered to include an indirect transfer of stock described in section 367(a)(1) by the shareholders of Z that are U.S. persons.

(3) *Indirect transfers involving partnerships and interests therein*—(i) *Transfer by partnership treated as transfer by partners*—(A) *In general.* If a partnership (whether foreign or domestic) transfers property to a foreign corporation in an exchange described in section 367(a)(1), then a U.S. person that is a partner in the partnership shall be treated as having transferred a proportionate share of the property in an exchange described in section 367(a)(1). A U.S. person's proportionate share of partnership property shall be determined under the rules and principles of sections 701 through 761 and the regulations thereunder. The rule of this paragraph (c)(3)(i)(A) is illustrated by the following example.

Example P is a partnership having five equal general partners, two of whom are United States persons. P transfers property to F, a foreign corporation, in connection with an exchange described in section 351. The exchange includes an indirect transfer of property by the partners to F. The transfers of property attributable to those partners who are United States persons, that is, 40 percent of each asset transferred to F, are transfers described in section 367(a)(1). The gain (if any) recognized on the transfer of 40 percent of each asset to F is attributable to the two partners who are United States persons.

(B) *Special adjustments to basis.* If a U.S. person is treated under the rule of this paragraph (c)(3)(i) as having transferred a proportionate share of the property of a partnership in an exchange described in section 367(a), and is therefore required to recognize gain upon the transfer, then—

(*1*) The U.S. person's basis in the partnership shall be increased by the amount of gain recognized by him;

(*2*) Solely for purposes of determining the basis of the partnership in the stock of the transferee foreign corporation, the U.S. person shall be treated as having newly acquired an interest in the partnership (for an amount equal to the gain recognized), permitting the partnership to make an optional adjustment to basis pursuant to sections 743 and 754; and

(*3*) The transferee foreign corporation's basis in the property acquired from the partnership shall be increased by the amount of gain recognized by U.S. persons under this paragraph (c)(3)(i).

(ii) *Transfer of partnership interest treated as transfer of proportionate share of assets*—(A) *In general.* If a U.S. person transfers an interest as a partner in a partnership (whether foreign or domestic) in an exchange described in section 367(a)(1), then that person shall be treated as having transferred a proportionate share of the property of the partnership in an exchange described in section 367(a)(1). Accordingly, the applicability of the exception to section 367(a)(1) provided in § 1.367(a)–2T shall be determined with reference to the property of the partnership rather than the partnership interest itself. A U.S. person's proportionate share of partnership property shall be determined under the rules and principles of sections 701 through 761 and the regulations thereunder.

(B) *Special adjustments to basis.* If a U.S. person is treated under the rule of paragraph (c)(3)(ii)(A) of this section as having transferred a proportionate share of the property of a partnership in an exchange described in section 367(a), and is therefore required to recognize gain upon the transfer, then—

(*1*) The U.S. person's basis in the stock of the transferee foreign corporation shall be increased by the amount of gain so recognized by that person;

(*2*) The transferee foreign corporation's basis in the transferred partnership interest shall be increased by the amount of gain recognized by the U.S. person; and

(*3*) Solely for purposes of determining the partnership's basis in the property held by it, the U.S. person shall be treated as having newly acquired an interest in the partnership (for an amount equal to the gain recognized), permitting the partnership to make an optional adjustment to basis pursuant to sections 743 and 754.

(C) *Limited partnership interest.* The transfer by a U.S. person of an interest in a partnership shall not be subject to the rules of paragraph (c)(3)(ii)(A) and (B) if—

(*1*) The interest transferred is a limited partnership interest; and

(*2*) Such interest is regularly traded on an established securities market.

Instead, the transfer of such an interest shall be treated in the same manner as a transfer of stock or securities. Thus, the consequences of such a transfer shall be determined under the rules of § 1.367(a)–3T. For purposes of this section, a limited partnership interest is an interest as a limited partner in a partnership that is organized under the laws of any State of the United States or the District of Columbia. Whether such an interest is regularly traded on an established securities market shall be determined under the provisions of paragraph (c)(3)(ii)(D) of this section.

(D) *Regularly traded on an established securities market*—(*1*) *Established securities market.* For purposes of this paragraph (c)(3)(ii), an established securities market is—

(*i*) A national securities exchange which is registered under section 6 of the Securities Exchange Act of 1934 (15 U.S.C. 78f);

(*ii*) A foreign national securities exchange which is officially recognized, sanctioned, or supervised by governmental authority; and

(*iii*) An over-the-counter market. An over-the-counter market is any market reflected by the existence of an inter-dealer quotation system. An inter-dealer quotation system is any system of general circulation to brokers and dealers which regularly disseminates quotations of stock and securities by identified brokers or dealers, other than by quotation sheets which are prepared and distributed by a broker or dealer in the regular course of business and which contain only quotations of such broker or dealer.

(*2*) *Regularly traded.* A class of interests that is traded on an established securities market is considered to be regularly traded if it is regularly quoted by brokers or dealers making a market in such interests. A class of interests shall be presumed to be regularly traded if the entity has a total of 500 or more interest-holders.

(4) *Transfers by trusts and estates*—(i) *In general.* For purposes of section 367(a), a transfer of property by an estate or trust shall be treated as a transfer by the entity itself and not as an indirect transfer by its beneficiaries. Thus, a transfer of property by a foreign trust or estate (as defined in section 7701(a)(31)) is not described in section 367(a)(1), regardless of whether the beneficiaries of the trust or estate are U.S. persons. Similarly, a transfer of property by a domestic trust or estate may be described in section 367(a)(1), regardless of whether the beneficiaries of the trust or estate are foreign persons.

(ii) *Grantor trusts.* A transfer of a portion or all of the assets of a foreign or domestic trust to a foreign corporation in an exchange described in section 367(a)(1) is considered a transfer by any U.S. person who is treated as the owner of any such portion or all of the assets of the trust under sections 671 through 679.

(5) *Termination of election under section 1504(d).* Section 367(A) applies to the constructive reorganization and transfer of property from a domestic corporation to a foreign corporation that occurs upon the termination of an election under section 1504(d), which permits the treatment of certain contiguous country corporations as domestic corporations. The rule of this paragraph (c)(5) is illustrated by the following example.

Example. Domestic corporation Y previously made a valid election under section 1504(d) to have its wholly owned Canadian subsidiary, C, treated as a domestic corporation. On July, 1, 1986, C fails to continue to qualify for the election under section 1504 (d). A constructive reorganization described in section 368(a)(1)(D) occurs. The resulting constructive transfer of assests by ''domestic'' corporation C to Canadian corporation C upon the termination of the election is a transfer of property described in section 367(a)(1).

(6) *Changes in classification of an entity.* If a foreign entity is classified as an entity other than an association taxable as a corporation for United States tax purposes, and subsequently a change is made in the governing documents, articles, or agreements of the entity so that the entity is thereafter classified as an association taxable as a corporation, the change in classification is considered a transfer of property to a foreign corporation in connection with an exchange described in section 351. For purposes of section 367(a)(1), the transfer of property is considered as made by the persons determined under the rules set forth in paragraph (c)(3) of this section with respect to partnerships, and paragraph (c)(4)(i) or (ii), with respect to trusts and estates, and the rules of such paragraphs apply determining whether a transfer described in section 367(a)(1) has been made.

(7) *Contributions to capital.* For rules with respect to the treatment of a contribution to the capital of a foreign corporation as a transfer described in section 367(a)(1), see section 367(c)(2) and the regulations thereunder.

(d) *Definitions.* The following definitions apply for purposes of this section and § 1.367(d)–1T.

(1) *United States person.* The term *United States person* includes those persons described in section 7701(a)(30). The term includes a citizen or resident of the United States, a domestic partnership, a domestic corporation, and any estate or trust other than a foreign estate or trust. (For definitions of these terms, see section 7701 and regulations thereunder.) For purposes of this section, an individual with respect to whom an election has been made under section 6013 (g) or (h) is considered to be a resident of the United States while such election is in effect. A nonresident alien or a foreign corporation will not be considered a United States person because of its actual or deemed conduct of a trade or business within the United States during a taxable year.

(2) *Foreign corporation.* The term *foreign corporation* has the meaning set forth in section 7701(a)(3) and (5) and § 301.7701–5.

(3) *Transfer.* For purposes of section 367 and regulations thereunder, the term *transfer* means any transaction that constitutes a transfer for purposes of sections 332, 351, 354, 355, 356, or 361, as applicable. A person's entering into a bona fide cost-sharing arrangement under § 1.482–2(d)(4) or acquiring rights to intangible property under such an arrangement shall not be considered a transfer of property described in section 367(a)(1). See § 1.6038B–1T(b)(3) for the date on which the transfer is considered to be made.

(4) *Property.* For purposes of section 367 and regulations thereunder, the term *property* means any item that constitutes property for purposes of sections 332, 351, 354, 355, 356, or 361, as applicable.

(5) *Intangible property*—(i) *In general.* For purposes of section 367 and regulations thereunder, the term *intangible property* means knowledge, rights, documents, and any other intangible item within the meaning of section 936(h)(3)(B) that constitutes property for purposes of sections 332, 351, 354, 355, 356, or 361, as applicable. Such property shall be treated as intangible property for purposes of section 367 (a) and (d) and the regulations thereunder without regard to whether it is used or developed in the United States or in a foreign country and without regard to whether it is used in manufacturing activities or in marketing activities. A working interest in oil and gas properties shall not be considered to be intangible property for purposes of section 367 and the regulations thereunder.

(ii) *Operating intangibles.* An operating intangible is any intangible property of a type not ordinarily licensed or otherwise transferred in transactions between unrelated parties for consideration contingent upon the licensee's or transferee's use of the property. Examples of operating intangibles may include long-term purchase or supply contracts, surveys, studies, and customer lists.

(iii) *Foreign goodwill or going concern value.* Foreign goodwill or going concern value is the residual value of a business operation conducted outside of the United States after all other tangible and intangible assets have been identified and valued. For purposes of section 367 and regulations thereunder the value of the right to use a corporate name in a foreign country shall be treated as foreign goodwill or going concern value.

(iv) *Transitional rule for certain marketing intangibles.* For transfers occurring after December 31, 1984, and before May 16, 1986, for foreign trademarks, tradenames, brandnames, and similar marketing intangibles developed by a foreign branch shall be treated as foreign goodwill or going concern value.

(e) *Close of taxable year in certain section 368(a)(1)(F) reorganizations.* If a domestic corporation is the transferor corporation in a reorganization described in section 368(a)(1)(F) after March 30, 1987, in which the acquiring corporation is a foreign corporation, then the taxable year of the transferor corporation shall end with the close of the date of the transfer and the taxable year of the acquiring corporation shall end with the close of the date on which the transferor's taxable year would have ended but for the occurrence of the transfer. With regard to the consequences of the closing of the taxable year, see section 381 and the regulations thereunder.

(f) *Exchanges under sections 354(a) and 361(a) in certain section 368(a)(1)(F) reorganizations.* In every reorganization under section 368(a)(1)(F), where the transferor corporation is a domestic corporation and the acquiring corporation is a foreign corporation, there is considered to exist—

(1) A transfer of assets by the transferor corporation to the acquiring corporation under section 361(a) in exchange for stock of the acquiring corporation and the assumption by the acquiring corporation of the transferor corporation's liabilities;

(2) A distribution of the stock (or stock and securities) of the acquiring corporation by the transferor corporation to the shareholders (or shareholders and security holders) of the transferor corporation; and

(3) An exchange by the transferor corporation's shareholders (or shareholders and security holders) of the stock of the transferor corporation for stock (or stock and securities) of the

acquiring corporation under section 354(a).

For this purpose, it shall be immaterial that the applicable foreign or domestic law treats the acquiring corporation as a continuance of the transferor corporation.

(g) *Effective date of certain section*—

(1) *In general.* Except as specifically provided to the contrary elsewhere in these sections, §§ 1.367(a)–1T through 1.367(a)–6T apply to transfers occurring after December 31, 1984.

(2) *Private rulings.* The taxpayer may rely on a private ruling under section 367(a) received by him before June 16, 1986.

(3) *Certain indirect transfers.* Sections 1.367(a)–1T(c)(2)(i) and (iii) and 1.367(a)–1T(c)(3) apply to transfers made after June 16, 1986. For transfers made before that date, see 26 CFR 1.367(a)–1(b) (revised as of April 1, 1986).

[T.D. 8087, 51 FR 17938, May 16, 1986, as amended at T.D. 8280, 55 FR 1408, Jan. 16, 1990]

§ 1.367(a)–2T Exception for transfers of property for use in the active conduct of a trade or business (temporary).

(a) *In general.* Section 367(a)(1) shall not apply to property transferred to a foreign corporation if—

(1) Such property is transferred for use by that corporation in the active conduct of a trade or business outside of the United States; and

(2) The U.S. person that transfers the property complies with the reporting requirements of section 6038B and regulations thereunder.

Where these conditions are satisifed, the foreign corporate transferee of the property shall be considered to be a corporation for purposes of determining the extent to which gain or loss is required to be recognized upon the transfer pursuant to section 332, 351, 354 [reserved as to section 355 or so much of section 356 as relates to section 355], 356, or 361. Paragraph (b) of this section provides rules concerning the requirement that property be transferred for use in the active conduct of a trade or business outside of the United States, while paragraph (c) concerns the application of the requirement where the transferee itself retransfers the property. In addition, § 1.367(a)–3T provides rules concerning the treatment of stock or securities transferred to a foreign corporation in an exchange described in section 367(a)(1), and § 1.367(a)–4T provides special rules concerning the treatment of other specified types of property. Finally, §§ 1.367(a)–5T and 1.367(a)–6T provide rules concerning certain transfers of property that are subject to section 367(a)(1) regardless of whether the property is used in the active conduct of a trade or business.

(b) *Active conduct of a trade or business outside the United States*—(1) *In general.* Property qualifies for the exception provided by this section if it is transferred to a foreign corporation for use in the active conduct of a trade or business outside of the United States. Therefore, to determine whether property is subject to the exception provided by this section, four factual determinations must be made:

(i) What is the trade or business of the transferee;

(ii) Do the activities of the transferee constitute the active conduct of that trade or business;

(iii) Is the trade or business conducted outside of the United States; and

(iv) Is the transferred property used or held for use in the trade or business?

Rules concerning these four determinations are provided in paragraphs (b)(2), (3), (4), and (5) of this section.

(2) *Trade or business.* Whether the activities of a foreign corporation constitute a trade or business must be determined under all the facts and circumstances. In general, a trade or business is a specific unified group of activities that constitute (or could constitute) an independent economic enterprise carried on for profit. For example, the activities of a foreign selling subsidiary could constitute a trade or business if they could be independently carried on for profit, even though the subsidiary acts exclusively on behalf of, and has operations fully integrated with, its parent corporation. To constitute a trade or business, a group of activities must ordinarily include every operation which forms a part of, or a step in, a process by which an enterprise may earn income or profit. In

this regard, one or more of such activities may be carried on by independent contractors under the direct control of the foreign corporation. (However, see paragraph (b)(3) of this section.) The group of activities must ordinarily include the collection of income and the payment of expenses. If the activities of a foreign corporation do not constitute a trade or business, then the exception provided by this section does not apply, regardless of the level of activities carried on by the corporation. The following activities are not considered to constitute by themselves a trade or business for purposes of this section:

(i) Any activity giving rise to expenses that would be deductible only under section 212 if the activities were carried on by an individual; or

(ii) The holding for one's own account of investments in stock, securities, land, or other property, including casual sales thereof.

(3) *Active conduct.* Whether a trade or business is actively conducted must be determined under all the facts and circumstances. In general, a corporation actively conducts a trade or business only if the officers and employees of the corporation carry out substantial managerial and operational activities. A corporation may be engaged in the active conduct of a trade or business even though incidental activities of the trade or business are carried out on behalf of the corporation by independent contractors. In determining whether the officers and employees of the corporation carry out substantial managerial and operational activities, however, the activities of independent contractors shall be disregarded. On the other hand, the officers and employees of the corporation are considered to include the officers and employees of related entities who are made available to and supervised on a day-to-day basis by, and whose salaries are paid by (or reimbursed to the lending related entity by), the transferee foreign corporation. Whether a trade or business that produces rents or royalties is actively conducted shall be determined under the principles of § 1.954–2(d)(1) (but without regard to whether the rents or royalties are received from an unrelated person). The rule of this paragraph (b)(3) is illustrated by the following example.

Example. X, a domestic corporation, and Y, a foreign corporation not related to X, transfer property to Z, a newly formed foreign corporation organized for the purpose of combining the research activities of X and Y. Z contracts all of its operational and research activities to Y for an arm's-length fee. Z's activities do not constitute the active conduct of a trade or business.

(4) *Outside of the United States.* Whether a foreign corporation conducts a trade or business outside of the United States must be determined under all the facts and circumstances. Generally, the primary managerial and operational activities of the trade or business must be conducted outside the United States and immediately after the transfer the transferred assets must be located outside the United States. Thus, the exception provided by this section would not apply to the transfer of the assets of a domestic business to a foreign corporation if the domestic business continued to operate in the United States after the transfer. In such a case, the primary operational activities of the business would continue to be conducted in the United States. Moreover, the transferred assets would be located in the United States. However, it is not necessary that every item of property transferred be used outside of the United States. As long as the primary managerial and operational activities of the trade or business are conducted outside of the United States and substantially all of the transferred assets are located outside the United States, incidental items of transferred property located in the United States may be considered to have been transferred for use in the active conduct of a trade or business outside of the United States.

(5) *Use in the trade or business.* Whether property is used or held for use in a trade or business must be determined under all the facts and circumstances. In general, property is used or held for use in a foreign corporation's trade or business if it is—

(i) Held for the principal purpose of promoting the present conduct of the trade or business;

(ii) Acquired and held in the ordinary course of the trade or business; or

(iii) Otherwise held in a direct relationship to the trade or business. Property is considered held in a direct relationship to a trade or business if it is held to meet the present needs of that trade or business and not its anticipated future needs.

Thus, property will not be considered to be held in a direct relationship to a trade or business if it is held for the purpose of providing for future diversification into a new trade or business, future expansion of trade or business activities, future plant replacement, or future business contingencies.

(c) *Property transferred by transferee corporation*—(1) *General rule.* If a foreign corporation receives property in an exchange described in section 367(a)(1) and as part of the same transaction transfers the property to another person, then the exception provided by this section shall not apply to the initial transfer. For purposes of the preceding sentence, a subsequent transfer within six months of the initial transfer shall be considered to be part of the same transaction, and a subsequent transfer more than six months after the initial transfer may be considered to be part of the same transaction upon the application of step-transaction principles.

(2) *Exception.* Notwithstanding paragraph (c)(1) of this section, the active conduct exception provided by this section shall apply to the initial transfer if—

(i) The initial transfer is followed by one or more subsequent transfers described in section 351 or 721; and

(ii) Each subsequent transferee is either a partnership in which the preceding transferor is a general partner or a corporation in which the preceding transferor owns common stock; and

(iii) The ultimate transferee uses the property in the active conduct of a trade or business outside the United States.

(d) *Transitional rule.* Notwithstanding any other provision of this section, property shall be considered to have been transferred for use in the active conduct of a trade or business outside of the United States, if—

(1) The property was transferred after December 31, 1984, and before June 16, 1986;

(2) The property was, or would have been, considered to be transferred for use by the transferee foreign corporation in the active conduct, in any foreign country, or a trade or business, under the principles of section 3.02(1) of Revenue Procedure 68–23, 1968–1 C.B. 821; and

(3) Based on all of the facts and circumstances, it was, or would have been, determined under section 2.02 of Revenue Procedure 68–23 that tax avoidance was not one of the principal purposes of the transaction.

[T.D. 8087, 51 FR 17942, May 16, 1986]

§ 1.367(a)–3 Treatment of transfers of stock or securities to foreign corporations.

(a) *In general.* This section provides rules concerning the transfer of stock or securities by a U.S. person to a foreign corporation in an exchange described in section 367(a). In general, a transfer of stock or securities by a U.S. person to a foreign corporation that is described in sections 351, 354 (pursuant to a reorganization described in section 368(a)(1)(B)) or section 361 (a) or (b) is subject to section 367(a)(1) and, therefore, is treated as a taxable exchange, unless one of the exceptions set forth in paragraph (c) or (d) of this section or § 1.367(a)–3T(b) applies. For additional rules relating to an exchange involving a foreign corporation in connection with which there is a transfer of stock, see section 367(b) and the regulations under that section. For additional rules regarding a transfer of stock or securities in an exchange described in section 361 (a) or (b), see section 367(a)(5) and any regulations under that section.

(b) [Reserved] For further guidance, see § 1.367(a)–3T(b).

(c) *Transfers by U.S. persons of stock or securities of domestic corporations to foreign corporations*—(1) *In general.* Except as provided in section 367(a)(5), a transfer of stock or securities of a domestic corporation by a U.S. person to a foreign corporation that would otherwise be subject to section 367(a)(1) under paragraph (a) of this section shall not be subject to section 367(a)(1) if the domestic corporation the stock or securities of which are transferred (referred

to as the U.S. target company) complies with the reporting requirements in paragraph (c)(6) of this section and if each of the following four conditions is met:

(i) Fifty percent or less of both the total voting power and the total value of the stock of the transferee foreign corporation is received in the transaction, in the aggregate, by U.S. transferors (*i.e.,* the amount of stock received does not exceed the 50-percent ownership threshold).

(ii) Fifty percent or less of each of the total voting power and the total value of the stock of the transferee foreign corporation is owned, in the aggregate, immediately after the transfer by U.S. persons that are either officers or directors of the U.S. target company or that are five-percent target shareholders (as defined in paragraph (c)(5)(iii) of this section) (*i.e.,* there is no control group). For purposes of this paragraph (c)(1)(ii), any stock of the transferee foreign corporation owned by U.S. persons immediately after the transfer will be taken into account, whether or not it was received in the exchange for stock or securities of the U.S. target company.

(iii) Either—

(A) The U.S. person is not a five-percent transferee shareholder (as defined in paragraph (c)(5)(ii) of this section); or

(B) The U.S. person is a five-percent transferee shareholder and enters into a five-year agreement to recognize gain with respect to the U.S. target company stock or securities it exchanged in the form provided in § 1.367(a)–3T(g); and

(iv) The active trade or business test (as defined in paragraph (c)(3) of this section) is satisfied.

(2) *Ownership presumption.* For purposes of paragraph (c)(1) of this section, persons who transfer stock or securities of the U.S. target company in exchange for stock of the transferee foreign corporation are presumed to be U.S. persons. This presumption may be rebutted in accordance with paragraph (c)(7) of this section.

(3) *Active trade or business test*—(i) *In general.* The tests of this paragraph (c)(3), collectively referred to as the active trade or business test, are satisfied if:

(A) The transferee foreign corporation or any qualified subsidiary (as defined in paragraph (c)(5)(vii) of this section) or any qualified partnership (as defined in paragraph (c)(5)(viii) of this section) is engaged in an active trade or business outside the United States, within the meaning of § 1.367(a)–2T(b)(2) and (3), for the entire 36-month period immediately before the transfer;

(B) At the time of the transfer, neither the transferors nor the transferee foreign corporation (and, if applicable, the qualified subsidiary or qualified partnership engaged in the active trade or business) have an intention to substantially dispose of or discontinue such trade or business; and

(C) The substantiality test (as defined in paragraph (c)(3)(iii) of this section) is satisfied.

(ii) *Special rules.* For purposes of paragraphs (c)(3)(i)(A) and (B) of this section, the following special rules apply:

(A) The transferee foreign corporation, a qualified subsidiary, or a qualified partnership will be considered to be engaged in an active trade or business for the entire 36-month period preceding the exchange if it acquires at the time of, or any time prior to, the exchange a trade or business that has been active throughout the entire 36-month period preceding the exchange. This special rule shall not apply, however, if the acquired active trade or business assets were owned by the U.S. target company or any affiliate (within the meaning of section 1504(a) but excluding the exceptions contained in section 1504(b) and substituting ''50 percent'' for ''80 percent'' where it appears therein) at any time during the 36-month period prior to the acquisition. Nor will this special rule apply if the principal purpose of such acquisition is to satisfy the active trade or business test.

(B) An active trade or business does not include the making or managing of investments for the account of the transferee foreign corporation or any affiliate (within the meaning of section 1504(a) but excluding the exceptions contained in section 1504(b) and substituting ''50 percent'' for ''80 percent''

where it appears therein). (This paragraph (c)(3)(ii)(B) shall not create any inference as to the scope of § 1.367(a)–2T(b)(2) and (3) for other purposes.)

(iii) *Substantiality test*—(A) *General rule.* A transferee foreign corporation will be deemed to satisfy the substantiality test if, at the time of the transfer, the fair market value of the transferee foreign corporation is at least equal to the fair market value of the U.S. target company.

(B) *Special rules.* (*1*) For purposes of paragraph (c)(3)(iii)(A) of this section, the value of the transferee foreign corporation shall include assets acquired outside the ordinary course of business by the transferee foreign corporation within the 36-month period preceding the exchange only if either—

(*i*) Both—

(*A*) At the time of the exchange, such assets or, as applicable, the proceeds thereof, do not produce, and are not held for the production of, passive income as defined in section 1296(b); and

(*B*) Such assets are not acquired for the principal purpose of satisfying the substantiality test; or

(*ii*) Such assets consist of the stock of a qualified subsidiary or an interest in a qualified partnership. See paragraph (c)(3)(iii)(B)(*2*) of this section.

(*2*) For purposes of paragraph (c)(3)(iii)(A) of this section, the value of the transferee foreign corporation shall not include the value of the stock of any qualified subsidiary or the value of any interest in a qualified partnership, held directly or indirectly, to the extent that such value is attributable to assets acquired by such qualified subsidiary or partnership outside the ordinary course of business and within the 36-month period preceding the exchange unless those assets satisfy the requirements in paragraph (c)(3)(iii)(B)(*1*) of this section.

(*3*) For purposes of paragraph (c)(3)(iii)(A) of this section, the value of the transferee foreign corporation shall not include the value of assets received within the 36-month period prior to the acquisition, notwithstanding the special rule in paragraph (c)(3)(iii)(B)(*1*) of this section, if such assets were owned by the U.S. target company or an affiliate (within the meaning of section 1504(a) but without the exceptions under section 1504(b) and substituting ''50 percent'' for ''80 percent'' where it appears therein) at any time during the 36-month period prior to the transaction.

(4) *Special rules*—(i) *Treatment of partnerships.* For purposes of this paragraph (c), if a partnership (whether domestic or foreign) owns stock or securities in the U.S. target company or the transferee foreign corporation, or transfers stock or securities in an exchange described in section 367(a), each partner in the partnership, and not the partnership itself, is treated as owning and as having transferred, or as owning, a proportionate share of the stock or securities. See § 1.367(a)–1T(c)(3).

(ii) *Treatment of options.* For purposes of this paragraph (c), one or more options (or an interest similar to an option) will be treated as exercised and thus will be counted as stock for purposes of determining whether the 50-percent threshold is exceeded or whether a control group exists if a principal purpose of the issuance or the acquisition of the option (or other interest) was the avoidance of the general rule contained in section 367(a)(1).

(iii) *U.S. target has a vestigial ownership interest in transferee foreign corporation.* In cases where, immediately after the transfer, the U.S. target company owns, directly or indirectly (applying the attribution rules of sections 267(c)(1) and (5)), stock of the transferee foreign corporation, that stock will not in any way be taken into account (and, thus, will not be treated as outstanding) in determining whether the 50-percent threshold under paragraph (c)(1)(i) of this section is exceeded or whether a control group under paragraph (c)(1)(ii) of this section exists.

(iv) *Attribution rule.* Except as otherwise provided in this section, the rules of section 318, as modified by the rules of section 958(b) shall apply for purposes of determining the ownership or receipt of stock, securities or other property under this paragraph (c).

(5) *Definitions*—(i) *Ownership statement.* An ownership statement is a statement, signed under penalties of perjury, stating—

(A) The identity and taxpayer identification number, if any, of the person making the statement;

(B) That the person making the statement is not a U.S. person (as defined in paragraph (c)(5)(iv) of this section);

(C) That the person making the statement either—

(*1*) Owns less than 1 percent of the total voting power and total value of a U.S. target company the stock of which is described in Rule 13d–1(d) of Regulation 13D (17 CFR 240.13d–1(d)) (or any rule or regulation to generally the same effect) promulgated by the Securities and Exchange Commission under the Securities and Exchange Act of 1934 (15 USC 78m), and such person did not acquire the stock with a principal purpose to enable the U.S. transferors to satisfy the requirement contained in paragraph (c)(1)(i) of this section; or

(*2*) Is not related to any U.S. person to whom the stock or securities owned by the person making the statement are attributable under the rules of section 958(b), and did not acquire the stock with a principal purpose to enable the U.S. transferors to satisfy the requirement contained in paragraph (c)(1)(i) of this section;

(D) The citizenship, permanent residence, home address, and U.S. address, if any, of the person making the statement; and

(E) The ownership such person has (by voting power and by value) in the U.S. target company prior to the exchange and the amount of stock of the transferee foreign corporation (by voting power and value) received by such person in the exchange.

(ii) *Five-percent transferee shareholder.* A five-percent transferee shareholder is a person that owns at least five percent of either the total voting power or the total value of the stock of the transferee foreign corporation immediately after the transfer described in section 367(a)(1). For special rules involving cases in which stock is held by a partnership, see paragraph (c)(4)(i) of this section.

(iii) *Five-percent target shareholder and certain other 5-percent shareholders.* A five-percent target shareholder is a person that owns at least five percent of either the total voting power or the total value of the stock of the U.S. target company immediately prior to the transfer described in section 367(a)(1). If the stock of the U.S. target company (or any company through which stock of the U.S. target company is owned indirectly or constructively) is described in Rule 13d–1(d) of Regulation 13D (17 CFR 240.13d–1(d)) (or any rule or regulation to generally the same effect), promulgated by the Securities and Exchange Commission under the Securities Exchange Act of 1934 (15 USC 78m), then, in the absence of actual knowledge to the contrary, the existence or absence of filings of Schedule 13–D or 13–G (or any similar schedules) may be relied upon for purposes of identifying five-percent target shareholders (or a five-percent shareholder of a corporation which itself is a five-percent shareholder of the U.S. target company). For special rules involving cases in which U.S. target company stock is held by a partnership, see paragraph (c)(4)(i) of this section.

(iv) *U.S. Person.* For purposes of this section, a U.S. person is defined by reference to § 1.367(a)–1T(d)(1). For application of the rules of this section to stock or securities owned or transferred by a partnership that is a U.S. person, however, see paragraph (c)(4)(i) of this section.

(v) *U.S. Transferor.* A U.S. transferor is a U.S. person (as defined in paragraph (c)(5)(iv) of this section) that transfers stock or securities of one or more U.S. target companies in exchange for stock of the transferee foreign corporation in an exchange described in section 367.

(vi) *Transferee foreign corporation.* A transferee foreign corporation is the foreign corporation whose stock is received in the exchange by U.S. persons.

(vii) *Qualified Subsidiary.* A qualified subsidiary is a foreign corporation whose stock is at least 80-percent owned (by total voting power and total value), directly or indirectly, by the transferee foreign corporation. However, a corporation will not be treated as a qualified subsidiary if it was affiliated with the U.S. target company (within the meaning of section 1504(a) but without the exceptions under section 1504(b) and substituting ''50 percent'' for ''80 percent'' where it appears

therein) at any time during the 36-month period prior to the transfer. Nor will a corporation be treated as a qualified subsidiary if it was acquired by the transferee foreign corporation at any time during the 36-month period prior to the transfer for the principal purpose of satisfying the active trade or business test, including the substantiality test.

(viii) *Qualified partnership.* (A) Except as provided in paragraph (c)(5)(viii)(B) or (C) of this section, a qualified partnership is a partnership in which the transferee foreign corporation—

(*1*) Has active and substantial management functions as a partner with regard to the partnership business; or –

(*2*) Has an interest representing a 25 percent or greater interest in the partnership's capital and profits.

(B) A partnership is not a qualified partnership if the U.S. target company or any affiliate of the U.S. target company (within the meaning of section 1504(a) but without the exceptions under section 1504(b) and substituting ''50 percent'' for ''80 percent'' where it appears therein) held a 5 percent or greater interest in the partnership's capital and profits at any time during the 36-month period prior to the transfer.

(C) A partnership is not a qualified partnership if the transferee foreign corporation's interest was acquired by that corporation at any time during the 36-month period prior to the transfer for the principal purpose of satisfying the active trade or business test, including the substantiality test.

(6) *Reporting requirements of U.S. target company.* (i) In order for a U.S. person that transfers stock or securities of a domestic corporation to qualify for the exception provided by this paragraph (c) to the general rule under section 367(a)(1), in cases where 10 percent or more of the total voting power or the total value of the stock of the U.S. target company is transferred by U.S. persons in the transaction, the U.S. target company must comply with the reporting requirements contained in this paragraph (c)(6). The U.S. target company must attach to its timely filed U.S. income tax return for the taxable year in which the transfer occurs a statement titled ''Section 367(a)—Reporting of Cross-Border Transfer Under Reg. § 1.367(a)–3(c)(6),'' signed under penalties of perjury by an officer of the corporation to the best of the officer's knowledge and belief, disclosing the following information—

(A) A description of the transaction in which a U.S. person or persons transferred stock or securities in the U.S. target company to the transferee foreign corporation in a transfer otherwise subject to section 367(a)(1);

(B) The amount (specified as to the percentage of the total voting power and the total value) of stock of the transferee foreign corporation received in the transaction, in the aggregate, by persons who transferred stock or securities of the U.S. target company. For additional information that may be required to rebut the ownership presumption of paragraph (c)(2) of this section in cases where more than 50 percent of either the total voting power or the total value of the stock of the transferee foreign corporation is received in the transaction, in the aggregate, by persons who transferred stock or securities of the U.S. target company, see paragraph (c)(7) of this section;

(C) The amount (if any) of transferee foreign corporation stock owned directly or indirectly (applying the attribution rules of sections 267(c)(1) and (5)) immediately after the exchange by the U.S. target company;

(D) A statement that there is no control group within the meaning of paragraph (c)(1)(ii) of this section;

(E) A list of U.S. persons who are officers, directors or five-percent target shareholders and the percentage of the total voting power and the total value of the stock of the transferee foreign corporation owned by such persons both immediately before and immediately after the transaction; and

(F) A statement that includes the following—

(*1*) A statement that the active trade or business test described in paragraph (c)(3) of this section is satisfied by the transferee foreign corporation and a description of such business;

(*2*) A statement that on the day of the transaction, there was no intent on the part of the transferee foreign corporation (or its qualified subsidiary, if relevant) or the transferors of the

transferee foreign corporation (or qualified subsidiary, if relevant) to substantially discontinue its active trade or business; and

(*3*) A statement that the substantiality test described in paragraph (c)(3)(iii) of this section is satisfied, and documentation that such test is satisfied, including the value of the transferee foreign corporation and the value of the U.S. target company on the day of the transfer, and either one of the following—

(*i*) A statement demonstrating that the value of the transferee foreign corporation 36 months prior to the acquisition, plus the value of any assets described in paragraph (c)(3)(iii)(B) of this section (including stock) acquired by the transferee foreign corporation within the 36-month period, less the amount of any liabilities acquired during that period, exceeds the value of the U.S. target company on the acquisition date; or

(*ii*) A statement demonstrating that the value of the transferee foreign corporation on the date of the acquisition, reduced by the value of any assets not described in paragraph (c)(3)(iii)(B) of this section (including stock) acquired by the transferee foreign corporation within the 36-month period, exceeds the value of the U.S. target company on the date of the acquisition.

(ii) For purposes of this paragraph (c)(6), an income tax return will be considered timely filed if such return is filed, together with the statement required by this paragraph (c)(6), on or before the last date for filing a Federal income tax return (taking into account any extensions of time therefor) for the taxable year in which the transfer occurs. If a return is not timely filed within the meaning of this paragraph (c)(6), the District Director may make a determination, based on all facts and circumstances, that the taxpayer had reasonable cause for its failure to file a timely filed return and, if such a determination is made, the requirement contained in this paragraph (c)(6) shall be waived.

(7) *Ownership statements.* To rebut the ownership presumption of paragraph (c)(2) of this section, the U.S. target company must obtain ownership statements (described in paragraph (c)(5)(i) of this section) from a sufficient number of persons that transfer U.S. target company stock or securities in the transaction that are not U.S. persons to demonstrate that the 50-percent threshold of paragraph (c)(1)(i) of this section is not exceeded. In addition, the U.S. target company must attach to its timely filed U.S. income tax return (as described in paragraph (c)(6)(ii) of this section) for the taxable year in which the transfer occurs a statement, titled ''Section 367(a)—Compilation of Ownership Statements Under Reg. § 1.367(a)–3(c),'' signed under penalties of perjury by an officer of the corporation, disclosing the following information:

(i) The amount (specified as to the percentage of the total voting power and the total value) of stock of the transferee foreign corporation received, in the aggregate, by U.S. transferors;

(ii) The amount (specified as to the percentage of total voting power and total value) of stock of the transferee foreign corporation received, in the aggregate, by foreign persons that filed ownership statements;

(iii) A summary of the information tabulated from the ownership statements, including—

(A) The names of the persons that filed ownership statements stating that they are not U.S. persons;

(B) The countries of residence and citizenship of such persons; and

(C) Each of such person's ownership (by voting power and by value) in the U.S. target company prior to the exchange and the amount of stock of the transferee foreign corporation (by voting power and value) received by such persons in the exchange.

(8) *Certain transfers in connection with performance of services.* Section 367(a)(1) shall not apply to a domestic corporation's transfer of its own stock or securities in connection with the performance of services, if the transfer is considered to be to a foreign corporation solely by reason of § 1.83–6(d)(1).

(9) *Private letter ruling option.* The Internal Revenue Service may, in limited circumstances, issue a private letter ruling to permit the taxpayer to qualify for an exception to the general rule under section 367(a)(1) if—

(i) A taxpayer is unable to satisfy all of the requirements of paragraph (c)(3) of this section relating to the active trade or business test of paragraph (c)(1)(iv) of this section, but such taxpayer meets all of the other requirements contained in paragraphs (c)(1)(i) through (c)(1)(iii) of this section, and such taxpayer is substantially in compliance with the rules set forth in paragraph (c)(3) of this section; or

(ii) A taxpayer is unable to satisfy any requirement of paragraph (c)(1) of this section due to the application of paragraph (c)(4)(iv) of this section. Notwithstanding the preceding sentence, in no event will the Internal Revenue Service rule on the issue of whether the principal purpose of an acquisition was to satisfy the active trade or business test, including the substantiality test.

(10) *Examples.* This paragraph (c) may be illustrated by the following examples:

Example 1. Ownership presumption.(i) FC, a foreign corporation, issues 51 percent of its stock to the shareholders of S, a domestic corporation, in exchange for their S stock, in a transaction described in section 367(a)(1).

(ii) Under paragraph (c)(2) of this section, all shareholders of S who receive stock of FC in the exchange are presumed to be U.S. persons. Unless this ownership presumption is rebutted, the condition set forth in paragraph (c)(1)(i) of this section will not be satisfied, and the exception in paragraph (c)(1) of this section will not be available. As a result, all U.S. persons that transferred S stock will recognize gain on the exchange. To rebut the ownership presumption, S must comply with the reporting requirements contained in paragraph (c)(6) of this section, obtaining ownership statements (described in paragraph (c)(5)(i) of this section) from a sufficient number of non-U.S. persons who received FC stock in the exchange to demonstrate that the amount of FC stock received by U.S. persons in the exchange does not exceed 50 percent.

Example 2. Filing of Gain Recognition Agreement.(i) The facts are the same as in *Example 1,* except that FC issues only 40 percent of its stock to the shareholders of S in the exchange. FC satisfies the active trade or business test of paragraph (c)(1)(iv) of this section. A, a U.S. person, owns 10 percent of S's stock immediately before the transfer. All other shareholders of S own less than five percent of its stock. None of S's officers or directors owns any stock in FC immediately after the transfer. A will own 15 percent of the stock of FC immediately after the transfer, 4 percent received in the exchange, and the balance being stock in FC that A owned prior to and independent of the transaction. No S shareholder besides A owns five percent or more of FC immediately after the transfer. The reporting requirements under paragraph (c)(6) of this section are satisfied.

(ii) The condition set forth in paragraph (c)(1)(i) of this section is satisfied because, even after application of the presumption in paragraph (c)(2) of this section, U.S. transferors could not receive more than 50 percent of FC's stock in the transaction. There is no control group because five-percent target shareholders and officers and directors of S do not, in the aggregate, own more than 50 percent of the stock of FC immediately after the transfer (A, the sole five-percent target shareholder, owns 15 percent of the stock of FC immediately after the transfer, and no officers or directors of S own any stock of FC immediately after the transfer). Therefore, the condition set forth in paragraph (c)(1)(ii) of this section is satisfied. The facts assume that the condition set forth in paragraph (c)(1)(iv) of this section is satisfied. Thus, U.S. persons that are not five-percent transferee shareholders will not recognize gain on the exchange of S shares for FC shares. A, a five-percent transferee shareholder, will not be required to include in income any gain realized on the exchange in the year of the transfer if he files a 5-year gain recognition agreement (GRA) and complies with section 6038B.

Example 3. Control Group.(i) The facts are the same as in *Example 2,* except that B, another U.S. person, is a 5-percent target shareholder, owning 25 percent of S's stock immediately before the transfer. B owns 40 percent of the stock of FC immediately after the transfer, 10 percent received in the exchange, and the balance being stock in FC that B owned prior to and independent of the transaction.

(ii) A control group exists because A and B, each a five-percent target shareholder within the meaning of paragraph (c)(5)(iii) of this section, together own more than 50 percent of FC immediately after the transfer (counting both stock received in the exchange and stock owned prior to and independent of the exchange). As a result, the condition set forth in paragraph (c)(1)(ii) of this section is not satisfied, and all U.S. persons (not merely A and B) who transferred S stock will recognize gain on the exchange.

Example 4. Partnerships.(i) The facts are the same as in *Example 3,* except that B is a partnership (domestic or foreign) that has five equal partners, only two of whom, X and Y, are U.S. persons. Under paragraph (c)(4)(i) of this section, X and Y are treated as the owners and transferors of 5 percent each of the S stock owned and transferred by B and as owners of 8 percent each of the FC stock owned by B immediately after the transfer.

U.S. persons that are five-percent target shareholders thus own a total of 31 percent of the stock of FC immediately after the transfer (A's 15 percent, plus X's 8 percent, plus Y's 8 percent).

(ii) Because no control group exists, the condition in paragraph (c)(1)(ii) of this section is satisfied. The conditions in paragraphs (c)(1)(i) and (iv) of this section also are satisfied. Thus, U.S. persons that are not five-percent transferee shareholders will not recognize gain on the exchange of S shares for FC shares. A, X, and Y, each a five-percent transferee shareholder, will not be required to include in income in the year of the transfer any gain realized on the exchange if they file 5-year GRAs and comply with section 6038B.

(11) *Effective date.* This paragraph (c) applies to transfers occurring after January 29, 1997. However, taxpayers may elect to apply this section in its entirety to all transfers occurring after April 17, 1994, provided that the statute of limitations of the affected tax year or years is open.

(d) *Transfers of stock or securities of foreign corporations.* For guidance, see Notice 87–85 (1987–2 C.B. 395). See § 601.601(d)(2) of this chapter.

(e) through (h) [Reserved]. For further guidance, see § 1.367(a)–3T(e) through (h).

[T.D. 8702, 61 FR 68637, Dec. 30, 1996]

§ 1.367(a)–3T Treatment of transfers of stock or securities to foreign corporations (temporary).

(a) [Reserved]. For further information, see § 1.367(a)–3(a).

(b) *Transfers to which section 367(a)(1) does not apply*—(1) *Transfers in certain reorganizations of stock or securities of foreign corporations.* If, pursuant to an exchange described in section 354, 361, or so much of section 356 as relates to section 354, a U.S. person transfers to a foreign corporation stock or securities of a foreign corporation that is a party to the reorganization, then section 367(a) shall not apply to the transfer, by reason of the operation of section 367(a)(2) and 1.367(a)–1T(b)(2)(i). Thus, section 367(a)(1) shall not apply to a transfer of stock of a foreign corporation by a U.S. person to another foreign corporation pursuant to a reorganization described in section 368(a)(1)(B) because the foreign corporation whose stock is transferred is a party to the reorganization. This result follows even though that foreign corporation may not be a party to other types of reorganizations or exchanges for which the transaction also qualifies. For rules concerning the treatment of certain transfers that are described in section 351 as well as one of the above-cited sections, see §§ 7.367(b)–4 and 7.367(b)–7.

(2) *Compulsory transfers.* For rules regarding a transfer of property (including stock or securities) that is compelled by foreign government action, see § 1.367(a)–4T(f).

(c) and (d) [Reserved]. For further information, see § 1.367(a)–3(c) and (d).

(e) [Reserved]. For transfers occurring before December 17, 1987, see § 1.367(a)–3T(e) as contained in 26 CFR Part 1 revised April 1, 1995.

(f) [Reserved]. For transfers occurring before December 17, 1987, see § 1.367(a)–3T(f) as contained in 26 CFR Part 1 revised April 1, 1995.

(g) *Transferor's agreement to recognize gain upon later disposition by transferee*—(1) *In general.* A transfer of stock or securities shall not be subject to section 367(a)(1) if—

(i) The transferor complies with the reporting requirements of section 6038B and any regulations thereunder; and

(ii) The transferor files a binding agreement to recognize gain upon the transferee corporation's later disposition of the transferred stock or securities, in accordance with the rules of this section.

(2) *Agreement to recognize gain: in general.* A transferor's agreement to recognize gain must be attached to, and filed by the due date of, the information return required under section 6038B.

In general, the return must be filed with the transferor's tax return for the taxable year that includes the date of the transfer. However, pursuant to § 1.6038B–1T(b)(1), returns with respect to transfers that took place prior to June 16, 1986. are not required to be filed until September 16, 1986. Therefore, an agreement to recognize gain under the rules of this section with respect to any such transfer may be timely filed until that date. The agreement must be signed under penalties of perjury by a trustee, executor, or equivalent fiduciary in the case of a

trust or estate, by a responsible officer in the case of a corporation, by a debtor in possession or trustee in a bankruptcy case under title 11, United States Code, and in the case of an individual, including a partner who is treated as a transferor by virtue of § 1.367–1T(c)(3), by the individual himself. An agreement may also be signed by an agent authorized to do so under a general or specific power of attorney. The agreement must set forth the following materials, preferably in paragraphs labeled to correspond with the subparagraphs set forth below:

(i) A statement that the document submitted constitutes the transferor's agreement to recognize gain, in accordance with the requirements of § 1.367(a)–3T(g);

(ii) A description of the stock or securities transferred, an estimate of fair market value as of the date of the transfer, and a statement of cost or other basis and any adjustments thereto;

(iii) The transferor's agreement to recognize gain, as described in subparagraph (3) of this paragraph (g);

(iv) A waiver of the period of limitations, as described in subparagraph (4) of this paragraph (g); and

(v) An agreement to file with the transferor's tax returns for the 5 years following the year of the transfer a certification and waiver as described in subparagraph (5) of this paragraph (g).

(3) *Terms of agreement*—(i) *Recognition of gain.* The transferor must agree that if, prior to the close of the fifth taxable year following the taxable year of the transfer, the transferee foreign corporation disposes of the transferred stock in any manner (other than in a liquidation of the transferred corporation), then by the 90th day thereafter the transferor will file an amended return for the year of the transfer and recognize thereon the gain realized but not recognized upon the initial transfer. Such gain shall be computed as if there had been a sale of the stock or securities at fair market value at the time of the initial transfer. Net operating losses or credits against tax that were available in the year of the initial transfer and that have expired unused may be applied (respectively) against any gain recognized or tax owed by reason of this provision, but no other adjustments shall be made with respect to any other items of income or deduction in the year of the transfer or other years. If additional tax is required to be paid, then interest must be paid on that amount at the rates determined under section 6621, with respect to the period between the date that was prescribed for filing the transferor's income tax return for the year of the transfer and the date on which the additional tax for that year is paid. For special rules applicable to nonrecognition transfers, see subparagraph (7) of this paragraph (g). For special rules applicable when a U.S. transferor that enters into an agreement under this paragraph (g) ceases to exist, see subparagraph (9) of this paragraph (g).

(ii) *Partial disposition.* If the transferee foreign corporation disposes of only a portion of the stock or securities of the transferred corporation, then the U.S. transferor shall be required to recognize a proportionate amount of the gain realized but not recognized upon the initial transfer. The proportion required to be recognized shall be determined by reference to the fair market value of the stock or securities disposed of an the fair market value of those retained. The rule of this paragraph (g)(3)(ii) is illustrated by the following example.

Example. A is a U.S. citizen who owns 100 percent of the outstanding stock of foreign corporation X. In a transaction described in section 351, A exchanges his stock in X for 25 percent of the outstanding stock of foreign corporation Y. A submits an agreement under the rules of this section to recognize gain upon a later disposition. In the following year, Y disposes of 50 percent of the fair market value of the stock of X. Therefore, A is required to recognize 50 percent of the gain he realized but did not recognize upon the initial transfer of the shares of X.

(iii) *Disposition of assets by transferred corporation.* For purposes of paragraph (g)(3)(i) and (ii) of this section, a disposition not in the ordinary course of business by the transferred corporation of all or a substantial portion of its assets (other than a distribution, including a liquidating distribution, to the transferee foreign corporation) shall be

treated as a disposition by the transferee foreign corporation of a proportionate amount of stock of the transferred corporation.

(iv) *Disposition of assets after distribution by transferred corporation.* For purposes of paragraph (g)(3)(i) and (ii) of this section, a disposition not in the ordinary course of business by the transferee foreign corporation of all or a substantial portion of the assets received by it in a distribution, including a liquidating distribution, from the transferred corporation shall be treated as a disposition by the transferee foreign corporation of a proportionate amount of stock of the transferred corporation.

(4) *Waiver of period of limitation.* The transferor must file a waiver of the period of limitation on assessment of tax upon the gain realized on the transfer. The waiver shall be executed on such forms as are prescribed therefor by the Commissioner and shall extend the period for assessment of such tax to a date not earlier than the close of the eighth taxable year following the taxable year of the transfer. Such waiver shall also contain such other terms with respect to assessment as may be considered by the Commissioner to be necessary to ensure the assessment and collection of the correct tax liability for each year for which the waiver is required. The waiver must be signed by a person authorized to sign the agreement pursuant to the provisions of paragraph (g)(2) of this section.

(5) *Annual certification and waiver*—(i) *Certification.* The transferor must agree to file with its income tax return for each of the five taxable years following the taxable year of the transfer a certification that the stock or securities transferred have not been disposed by the transferee in a transaction that is considered to be a disposition for purposes of this paragraph. If either a disposition qualifying under paragraph (g)(1) of this section or a nonrecognition transfer subject to paragraph (g)(7) of this section has occurred, the transferor's certification must provide the information required under the rules of the subject paragraph. The annual certification pursuant to this paragraph (g)(5) must be signed under penalties of perjury by a person authorized to sign the agreement pursuant to the provisions of paragraph (g)(2) of this section. The certification must identify the transfer with respect to which it is given by setting forth the date of the transfer and a description of the stock or securities transferred. If a taxpayer has made more than one transfer subject to the rules of this paragraph (g), the certifications for those transfers may be combined in a single document, but each transfer must be separately identified.

(ii) *Waiver.* The transferor must agree to file with its income tax return for each of the eight taxable years following the taxable year of the transfer a waiver of the period of limitations on assessment as described in paragraph (g)(4) of this section. For the rule extending the period of limitations upon a failure to comply with the reporting requirements of section 6038B and regulations thereunder, see § 1.6038B–1T(f)(1)(iii).

(6) *Warranty of information regarding disposition.* The transferor must warrant that arrangements have been made in connection with the transfer of stock or securities to ensure that the transferor will be informed of any subsequent disposition of stock, securities, or assets that would require the recognition of gain under the agreement.

(7) *Treatment of nonrecognition transfers.* If, during the period the agreement is in force, the transferee foreign corporation disposes of the stock or securities of the transferred corporation in a transaction on which gain or loss would not be required to be recognized under U.S. income tax principles, then the U.S. transferor shall not be required to recognize gain under paragraph (g)(3)(i) of this section, provided that the U.S. transferor complies with the requirements of subdivisions (i), (ii), and (iii) of this paragraph (g)(7).

(i) The U.S. transferor must provide a notice of the transfer with its next annual certification under paragraph (g)(5) of this section, setting forth—

(A) A description of the transfer;

(B) The applicable nonrecognition provision; and

(C) The name, address, and identifying number (if any) of the new transferee of the stock or securities of the transferred corporation.

(ii) The U.S. transferor must provide a new agreement to recognize gain (in accordance with the rules of paragraph (g)(2) and (3)(i) of this section) if, prior to the close of the fifth taxable year following the taxable year of the initial transfer, either—

(A) The initial transferee foreign corporation disposes of the interest which it received in exchange for the stock or securities of the transferred corporation (other than in a disposition which itself qualifies under the rules of this paragraph (g)(7)); or

(B) The person that obtained the stock or securities of the transferred corporation disposes of that stock or those securities (other than in a disposition which itself qualifies under the rules of this paragraph (g)(7)).

If a disposition that triggers the recognition of gain under the rules of this paragraph is only a partial disposition of the property, then the U.S. transferor shall be required to recognize a proportionate amount of the gain realized but not recognized upon the initial transfer. The proportion required to be recognized shall be determined by reference to the fair market value of the stock or securities disposed of and the fair market value of those retained as of the date of the disposition.

(iii) The U.S. transferor must warrant that arrangements have been made, in connection with the nonrecognition transfer, ensuring that the U.S. transferor will be informed of any subsequent disposition with respect to which recognition of gain would be required under the agreement.

(8) *Special rules for indirect transfers*—(i) *Transfers covered.* If a U.S. person that holds an interest in an entity is considered to make an indirect transfer of stock or securities described in section 367(a) under the provisions of § 1.367(a)–1T(c), then the rules of this paragraph (g)(8) shall apply to the transfer.

(ii) *Applicable rules.* For purposes of this paragraph (g), the foreign corporation that issued the stock or securities received by the U.S. transferor shall be considered to be the transferee foreign corporation. Any agreement entered into under this paragraph (g) with respect to such a transfer shall require the recognition of gain by the transferor if—

(A) That transferee foreign corporation disposes of the corporation that it controls (regardless of whether that corporation is the transferred corporation itself or another corporation that obtained the stock, securities, or assets of the transferred corporation); or

(B) The corporation that holds the assets of the transferred corporation disposes of all or a substantial portion of those assets other than in the ordinary course of business.

The rules of paragraph (g)(7) of this section shall apply if gain or loss would not be required to be recognized under U.S. income tax principles with respect to such a transfer.

(9) *U.S. transferor goes out of existence.* If a U.S. corporation, trust, or estate that has entered into an agreement under this paragraph (g) goes out of existence, and that corporation, trust, or estate is not required to recognize gain under section 367 upon its liquidating transfer of the stock of the transferee foreign corporation, or if an individual transferor that has entered into an agreement under this paragraph (g) dies, then either—

(i) The person winding up the affairs of the transferor must retain assets to meet any possible liability of the transferor under the agreement;

(ii) The person winding up the affairs of the transferor must provide security under subparagraph (10) of this paragraph (g) for any possible liability of the transferor under the agreement; or

(iii) Each person that obtains the stock of the transferee foreign corporation from the transferor must enter into an agreement under this paragraph (g) having the same terms as the agreement entered into by the transferor (but only with respect to that person's proportionate share of the gain realized but not recognized upon the transferor's initial transfer of stock to the transferee foreign corporation).

(10) *Use of security.* The transferor may be required to furnish a bond or other security that satisfies the requirements of § 301.7101–1 if the district

director determines that such security is necessary to ensure the payment of any tax upon the gain realized upon the transfer. Such bond or security will generally be required only if the stock or securities transferred are the principal asset of the tranferor and the director has reason to believe that a disposition of the stock or securities may be contemplated. In addition, if a tranferor corporation, trust, or estate ceases to exist, or if an individual transferor dies, then the person winding up the affairs of the transferor (such as a trustee in bankruptcy or an executor) may choose to supply security pursuant to paragraph (g)(9) of this section for the performance of the transferor's obligations under an agreement entered into under this paragraph (g).

(11) *Failure to comply*. If a person that has entered into an agreement under this paragraph (g) fails at any time to comply in any material respect with the requirements of this section or with the terms of any agreement submitted pursuant thereto, then the rule of paragraph (g)(1) of this section shall not apply. Thus, the initial transfer of the stock or securities will become subject to section 367(a)(1) (unless otherwise excepted under the rules of this section) and will be treated as a taxable exchange in the year of the initial transfer. Such a material failure to comply shall extend the period for assessment of tax until three years after the date on which the Internal Revenue Service receives actual notice of the failure to comply.

(12) *Availability of forms*. Any agreement, certification, waiver, or other document required to be filed pursuant to the provisions of this paragraph (g) shall use such forms as may be prescribed therefore by the Commissioner (or a similar statement providing the same information). Until such time as forms are published, all necessary filings may be accomplished by providing the required information to the Service in accordance with the rules of this paragraph.

(13) *Basis adjustments*—(i) If a U.S. transferor is required to recognize gain under this paragraph (g), then in determining for U.S. income tax purposes any gain or loss recognized by the transferee foreign corporation upon its subsequent dispositon of the transferred stock or securities, its basis in such interests shall be increased by the amount of gain required to be recognized (but not by any tax or interest required to be paid on such amount).

(ii) If a U.S. transferor is required to recognize gain under this paragraph (g), then the U.S. transferor's basis in the stock of the transferee foreign corporation shall be increased by the amount of gain required to be recognized (but not by any tax or interest required to be paid on such amount).

(h) *Anti-abuse rules*—(1) [Reserved.] For transfers occurring before December 17, 1987, see § 1.367(a)–3T(h)(1) as contained in 26 CFR Part 1 revised April 1, 1995.

(2) *Incorporation of property to avoid section 367(a)(1)*. Notwithstanding any other provision of this section, section 367(a)(1) shall apply to a transfer of stock or securities of a domestic corporation if:

(i) The domestic corporation holds property that would be subject to section 367(a)(1) if it were transferred directly to a foreign corporation;

(ii) A U.S. person transferred that property to the domestic corporation in a transaction on which gain or loss was not required to be recognized, and

(iii) One of the principal purposes of the incorporation and transfer was avoidance of the provisions of section 367(a).

A transfer of property shall be presumed to have been made to avoid the provisions of section 367(a) if the transfer to the domestic corporation occurred less than two years before the transfer of the stock of the domestic corporation to the foreign corporation, or if it otherwise appears that the transfer of stock to the foreign corporation was planned or contemplated at the time of the transfer of the property to the domestic corporation. The presumption created by the previous sentence may be rebutted by evidence establishing that avoidance of the provisions of section 367(a) was not one of the principal purposes of the incorporation and subsequent transfer.

[T.D. 8087, 51 FR 17943, May 16, 1986, as amended by T.D. 8638, 60 FR 66743, Dec. 26, 1995; T.D. 8702, 61 FR 68641, Dec. 30, 1996]

§ 1.367(a)–4T Special rules applicable to specified transfers of property (temporary).

(a) *In general.* This section provides special rules for determining the applicability of section 367(a)(1) to specified transfers of property. Paragraph (b) of this section provides a special rule requiring the recapture of depreciation upon the transfer abroad of property previously used in the United States. Paragraphs (c) through (f) of this section provide rules for determining whether certain types of property are transferred for use in the active conduct of a trade or business outside of the United States. Paragraph (g) excepts certain transfers to FSCs from the operation of section 367(a)(1). The treatment of any transfer of property described in this section shall be determined exclusively under the rules of this section.

(b) *Depreciated property used in the U.S.*—(1) *In general.* If a U.S. person transfers U.S. depreciated property (as defined in paragraph (b)(2) of this section) to a foreign corporation in an exchange described in section 367(a)(1), then that person shall include in its gross income for the taxable year in which the transfer occurs ordinary income equal to the gain realized that would have been includible in the transferor's gross income as ordinary income under section 617(d)(1), 1245(a), 1250(a), 1252(a), or 1254(a), whichever is applicable, if at the time of the transfer the transferor had sold the property at its fair market value. Recapture of depreciation under this paragraph (b) shall be required regardless of whether any exception to section 367(a)(1) (such as the exception for property transferred for use in the active conduct of a foreign trade or business) would otherwise apply to the transfer. However, any applicable exception shall apply with respect to realized gain that is not included in ordinary income pursuant to this paragraph (b).

(2) *U.S. depreciated property*. U.S. depreciated property subject to the rules of this paragraph (b) is any property that—

(i) Is either mining property (as defined in section 617(f)(2)), section 1245 property (as defined in section 1245(a)(3)), section 1250 property (as defined in section 1250(c)), farm land (as defined in section 1252(a)(2)), or oil, gas, or geothermal property (as defined in section 1254(a)(3)); and

(ii) Has been used in the United States or has qualified as section 38 property by virtue of section 48(a)(2)(B) prior to its transfer.

(3) *Property used within and without the U.S.* If U.S. depreciated property has been used partly within and partly without the United States, then the amount required to be included in ordinary income pursuant to this paragraph (b) shall be reduced to an amount determined in accordance with the following formula:

$$\text{Full recapture amount} \times \frac{\text{U.S. use}}{\text{Total use}}$$

For purposes of the above fraction, the *full recapture amount* is the amount that would otherwise be included in the transferor's income under paragraph (b)(1) of this section. *U.S. use* is the number of months that the property either was used within the United States or qualified as section 38 property by virtue of section 48(a)(2)(B), and was subject to depreciation by the transferor or a related person. *Total use* is the total number of months that the property was used (or available for use), and subject to depreciation, by the transferor or a related person. For purposes of this paragraph (b)(3), property shall not be considered to have been in use outside of the United States during any period in which such property was, for purposes of section 48 or 168, treated as property not used predominantly outside the United States pursuant to the provisions of section 48(a)(2)(B). For purposes of this paragraph (b)(3) the term *related person* shall have the meaning set forth in § 1.367(d)–1T(h).

(4) [Reserved]

(5) *Effective date.* This paragraph (b) applies to transfers occurring on or after June 16, 1986.

(c) *Property to be leased*—(1) *Leasing business of transferee.* Tangible property transferred to a foreign corporation that will be leased to other persons by

the foreign corporation shall be considered to be transferred for use in the active conduct of a trade or business outside of the United States only if—

(i) The transferee's leasing of the property constitutes the active conduct of a leasing business;

(ii) The lessee of the property is not expected to, and does not, use the property in the United States; and

(iii) The transferee has need for substantial investment in assets of the type transferred.

The active conduct of a leasing business requires that the employees of the foreign corporation perform substantial marketing, customer service, repair and maintenance, and other substantial operational activities with respect to the transferred property outside of the United States. Tangible property subject to the rules of this paragraph (c) includes real property located outside of the United States. The rules of § 1.367(a)–5T(b) shall apply to transfers of property described in that section regardless of satisfaction of the rules of this paragraph (c).

(2) *De minimis leasing by transferee.* Tangible property transferred to a foreign corporation that will be leased to other persons by the foreign corporation and that does not satisfy the conditions of paragraph (b)(1) of this section shall, nevertheless, be considered to be transferred for use in the active conduct of a trade or business if either—

(i) The property transferred will be used by the transferee foreign corporation in the active conduct of a trade or business but will be leased during occasional brief periods when the property would otherwise be idle, such as an airplane leased during periods of excess capacity; or

(ii) The property transferred is real property located outside the United States and—

(A) The property will be used primarily in the active conduct of a trade or business of the transferee foreign corporation; and

(B) Not more than ten percent of the square footage of the property will be leased to others.

(d) *Property to be sold.* Property shall not be considered to be transferred for use in the active conduct of a trade or business and a transfer of stock or securities shall not be excepted from section 367(a)(1) under the rules of § 1.367(a)–3T if, at the time of the transfer, it is reasonable to believe that, in the reasonably foreseeable future, the transferee will sell or otherwise dispose of any material portion of the transferred stock, securities, or other property other than in the ordinary course of business.

(e) *Oil and gas working interests*—(1) *In general.* A working interest in oil and gas properties shall be considered to be transferred for use in the active conduct of a trade or business if—

(i) The transfer satisfies the conditions of paragraph (e)(2) of this section;

(ii) At the time of the transfer, the transferee has no intention to farmout or otherwise transfer any part of the transferred working interest; and

(iii) During the first three years after the transfer there are no farmouts or other transfers of any part of the transferred working interest as a result of which the transferee retains less than a 50 percent share of the transferred working interest.

(2) *Active use of working interest.* Working interests in oil and gas properties shall be considered to be transferred for use in the active conduct of a trade or business if—

(i) The transferor is regularly and substantially engaged in exploration for and extraction of minerals, either directly or through working interests in joint ventures, other than by reason of the property that is transferred;

(ii) The terms of the working interest transferred were actively negotiated among the joint venturers;

(iii) The working interest transferred constitutes at least a five percent working interest;

(iv) Prior to and at the time of the transfer, through its own employees or officers, the transferor was regularly and actively engaged in—

(A) Operating the working interest, or

(B) Analyzing technical data relating to the activities of the venture;

(v) Prior to and at the time of the transfer, through its own employees or officers, the transferor was regularly and actively involved in decisionmaking with respect to the operations of

the venture, including decisions relating to exploration, development, production, and marketing; and

(vi) After the transfer, the transferee foreign corporation will for the foreseeable future satisfy the requirements of subdivisions (iv) and (v) of this paragraph (d)(2).

(3) *Start-up operations.* Working interests in oil and gas properties that do not satisfy the requirements of paragraph (e)(2) of this section shall, nevertheless, be considered to be transferred for use in the active conduct of a trade or business if—

(i) The working interest was acquired by the transferor immediately prior to the transfer and for the specific purpose of transferring it to the transferee foreign corporation;

(ii) The requirements of paragraph (e)(2)(ii) and (iii) of this section are satisfied; and

(iii) The transferee foreign corporation will for the foreseeable future satisfy the requirements of paragraph (e)(2)(iv) and (v) of this section.

(4) *Other applicable rules.* Oil and gas interests not described in this paragraph (e) may nonetheless qualify for the exception to section 367(a)(1) contained in § 1.367(a)–2T, relating to transfers of property for use in the active conduct of a trade or business outside of the United States. However, a mere royalty interest in oil and gas properties will not be treated as transferred for use in the active conduct of a trade or business outside the United States. Moreover, a royalty or similar interest that constitutes intangible property will be subject to the rules of § 1.367(d)–1T, relating to transfers of intangible property.

(f) *Compulsory transfers.* Property shall be presumed to be transferred for use in the active conduct of a trade or business outside of the United States, if—

(1) The property was previously in use in the country in which the transferee foreign corporation is organized; and

(2) The transfer is either:

(i) Legally required by the foreign government as a necessary condition of doing business in that country; or

(ii) Compelled by a genuine threat of immediate expropriation by the foreign government.

(g) *Relationship to other sections.* The rules of §§ 1.367(a)–5T, 1.367(a)–6T, and 1.367(d)–1T apply to transfers of property whether or not the property is transferred for use in the active conduct of a trade or business outside the United States. See § 1.367(d)–1T(g)(2)(ii) for a special election with respect to compulsory transfers of intangible property.

(h) *Transfers of certain property to FSCs*—(1) *In general.* The provisions of section 367 (a) and (d) and the regulations thereunder shall not apply to a transfer of property by a U.S. person to a foreign corporation that constitutes a FSC, as defined in section 922(a), if—

(i) The transferee FSC uses the property to generate exempt foreign trade income, as defined in section 923(a);

(ii) The property is not excluded property, as defined in section 927(a)(2); and

(iii) The property consists of a corporate name or tangible property that is appropriate for use in the operation of a FSC office.

(2) *Exception.* The general rule in paragraph (g)(1) of this section shall not apply if, within three years after the original transfer, the original transferee FSC (or a subsequent transferee FSC) disposes of the property other than in the ordinary course of business or through a transfer to another FSC. Thus, the U.S. transferor may recognize gain in the taxable year in which the original transfer occurred through the application of section 367 and the regulations thereunder.

[T.D. 8087, 51 FR 17947, May 16, 1986, as amended by T.D. 8515, 59 FR 2960, Jan. 20, 1994]

§ 1.367(a)–5T Property subject to section 367(a)(1) regardless of use in trade or business (temporary).

(a) *In general.* Section 367(a)(1) shall apply to a transfer of property described in this section regardless of whether the property is transferred for use in the active conduct of a trade or business. Certain exceptions to the operation of this rule are provided in this section, and a special gain limitation rule is provided in paragraph (e). A

transfer of property described in this section is subject to section 367(a)(1) even if the transfer is a compulsory transfer described in § 1.367(a)–4T(f).

(b) *Inventory, etc.* Regardless of use in an active trade or business, section 367(a)(1) shall apply to the transfer of—

(1) Stock in trade of the taxpayer or other property of a kind which would properly be included in the inventory of the taxpayer if on hand at the close of the taxable year, or property held by the taxpayer primarily for sale to customers in the ordinary course of its trade or business; and

(2) A copyright, a literary, musical, or artistic composition, a letter or memorandum, or similar property, held by—

(i) A taxpayer whose personal efforts created such property;

(ii) In the case of a letter, memorandum, or similar property, a taxpayer from whom such property was prepared or produced; or

(iii) A taxpayer in whose hands the basis of such property is determined, for purposes of determining gain from a sale or exchange, in whole or part by reference to the basis of such property in the hands of a taxpayer described in subdivision (i) or (ii) of this paragraph (b)(2).

For purposes of this section, the term *inventory* includes raw materials and supplies, partially completed goods, and finished products.

(c) *Installment obligations, etc.* Regardless of use in an active trade or business, section 367(a)(1) shall apply to the transfer of installment obligations, accounts receivable, or similar property, but only to the extent that the principal amount of any such obligation has not previously been included by the taxpayer in its taxable income.

(d) *Foreign currency, etc.*—(1) *In general.* Regardless of use in an active trade or business, section 367(a)(1) shall apply to the transfer of foreign currency or other property denominated in foreign currency, including installment obligations, futures contracts, forward contracts, accounts receivable, or any other obligation entitling its payee to receive payment in a currency other than U.S. dollars.

(2) *Exception for certain obligations.* If transferred property denominated in a foreign currency—

(i) Is denominated in the currency of the country in which the transferee foreign corporation is organized; and

(ii) Was acquired in the ordinary course of the business of the transferor that will be carried on by the transferee foreign corporation,

then section 367(a)(1) shall apply to the transfer only to the extent that gain is required to be recognized with respect to previously realized income reflected in installment obligations subject to paragraph (c) of this section. The rule of this paragraph (d)(2) shall not apply to transfers of foreign currency.

(3) *Limitation of gain required to be recognized.* If section 367(a)(1) applies to a transfer of property described in this paragraph, then the gain required to be recognized shall be limited to—

(i) The gain realized upon the transfer of property described in this paragraph (d), minus

(ii) Any loss realized as part of the same transaction upon the transfer of property described in this paragraph (d).

This limitation applies in lieu of the rule in § 1.367(a)–1T(b)(1). No loss shall be recognized with respect to property described in this paragraph (d).

(e) *Intangible property.* Regardless of use in an active trade or business, a transfer of intangible property pursuant to section 332 shall be subject to section 367(a)(1), unless it constitutes foreign goodwill or going concern value, as defined in § 1.367(a)–1T(d)(5)(iii). For rules concerning transfers of intangible property pursuant to section 351 or 361, see section 367(d) and § 1.367(d)–1T.

(f) *Leased tangible property.* Regardless of use in an active trade or business, section 367(a)(1) shall apply to a transfer of tangible property with respect to which the transferor is a lessor at the time of the transfer, unless—

(1) With respect to property that will not be leased by the transferee to third persons, the transferee was the lessee of the property at the time of the transfer; or

(2) With respect to property that will be leased by the transferee to third persons, the transferee satisfies the conditions set forth in § 1.367(a)–4T(c)(1) or (2).

[T.D. 8087, 51 FR 17949, May 16, 1986]

§ 1.367(a)–6T Transfer of foreign branch with previously deducted losses (temporary).

(a) *In general.* This section provides special rules relating to the transfer of the assets of a foreign branch with previously deducted losses. Paragraph (b) of this section provides generally that such losses must be recaptured by the recognition of the gain realized on the transfer. Paragraph (c) of this section sets forth rules concerning the character of, and limitations on, the gain required to be recognized. Paragraph (d) of this section defines the term *previously deducted losses.* Paragraph (e) of this section describes certain reductions that are made to the previously deducted losses before they are taken into income under this section. Finally, paragraph (g) of this section defines the term *foreign branch.*

(b) *Recognition of gain required*—(1) *In general.* If a U.S. person transfers any assets of a foreign branch to a foreign corporation in an exchange described in section 367(a)(1), then the transferor shall recognize gain equal to—

(i) The sum of the previously deducted branch ordinary losses as defined and reduced in paragraphs (d) and (e) of this section; and

(ii) The sum of the previously deducted branch capital losses as defined and reduced in paragraphs (d) and (e) of this section.

(2) *No active conduct exception.* The rules of this paragraph (b) shall apply regardless of whether the assets of the foreign branch are transferred for use in the active conduct of a trade or business outside the United States.

(c) *Special rules concerning gain recognized*—(1) *Character and source of gain.* The gain described in paragraph (b)(1)(i) of this section shall be treated as ordinary income of the transferor, and the gain described in paragraph (b)(1)(ii) of this section shall be treated as long-term capital gain of the transferor. Gain that is recognized pursuant to the rules of this section shall be treated as income from sources outside the United States. Such recognized gain shall be treated as foreign oil and gas extraction income (as defined in section 907) in the same proportion that previously deducted foreign oil and gas extraction losses bore to the total amount of previously deducted losses.

(2) *Gain limitation.* For a rule limiting the amount of gain required to be recognized under section 367(a) upon any transfer of property to a foreign corporation, including the transfer of assets of a foreign branch with previously deducted losses, see § 1.367(a)–1T(b)(3).

(3) *Foreign goodwill and going concern value.* For purposes of this section, the assets of a foreign branch shall include foreign goodwill and going concern value related to the business of the foreign branch, as defined in § 1.367(a)–1T(d)(5)(iii). Thus, gain realized upon the transfer of the foreign goodwill or going concern value of a foreign branch to a foreign corporation will be taken into account in computing the limitation on loss recapture under paragraph (c)(2) of this section.

(4) *Transfers of certain intangible property.* Gain realized on the transfer of intangible property (computed with reference to the fair market value of the intangible property as of the date of the transfer) that is an asset of a foreign branch shall be taken into account in computing the limitation on loss recapture under paragraph (c)(2) of this section. For rules relating to the crediting of gain recognized under this section against income deemed to arise by operation of section 367(d), see § 1.367(d)–1T(g)(3).

(d) *Previously deducted losses*—(1) *In general.* This paragraph (d) provides rules for determining, for purposes of paragraph (b)(1) of this section, the previously deducted losses of a foreign branch any of whose assets are transferred to a foreign corporation in an exchange described in section 367(a)(1). Initially, the two previously deducted losses of a foreign branch for a taxable year are the total ordinary loss (''previously deducted branch ordinary loss'') and the total capital loss (''previously deducted branch capital loss'') that were realized by the foreign branch in that taxable year (a ''branch

loss year'') prior to the transfer and that were or will be reflected on a U.S. income tax return of the transferor. The previously deducted branch ordinary loss for each branch loss year is reduced by expired net ordinary losses under paragraph (d)(2) of this section, while the previously deducted capital loss for each loss year is reduced by expired net capital losses under paragraph (d)(3) of this section. For each branch loss year, the remaining previously deducted branch ordinary loss and the remaining previously deducted branch capital loss are then reduced, proceeding from the first branch loss year to the last branch loss year, to reflect expired foreign tax credits under paragraph (d)(4) of this section. The reductions are made in the order of the taxable years in which the foreign tax credits arose. Finally, similar reductions are made to reflect expired investment credits under paragraph (d)(5) of this section.

(2) *Reduction by expired net ordinary loss*—(i) *In general.* The previously deducted branch ordinary loss for each branch loss year shall be reduced under this paragraph (d)(2) by the amount of any expired net ordinary loss with respect to that branch loss year. Expired net ordinary losses arising in years other than the branch loss year shall reduce the previously deducted branch ordinary loss for the branch loss year only to the extent that the previously deducted branch ordinary loss exceeds the net operating loss, if any, incurred by the transferor in the branch loss year. The previously deducted branch ordinary losses shall be reduced proceeding from the first branch loss year to the last branch loss year. For each branch loss year, expired net operating losses shall be applied to reduce the previously deducted branch ordinary loss for that year in the order in which the expired net ordinary losses arose.

(ii) *Existence of expired net ordinary loss.* An expired net ordinary loss exists with respect to a branch loss year to the extent that—

(A) The transferor incurred a net operating loss (within the meaning of section 172(c));

(B) That net operating loss arose in the branch loss year or was available for carryover or carryback to the branch loss year under section 172(b)(1);

(C) That net operating loss has neither given rise to a net operating loss deduction (within the meaning of section 172(a)) for any taxable year prior to the year of the transfer, nor given rise to a reduction of any previously deducted branch ordinary loss (pursuant to paragraph (d)(2) of this section) of any foreign branch of the transferor upon a previous transfer to a foreign corporation; and

(D) The period during which the transferor may claim a net operating loss deduction with respect to that net operating loss has expired.

(3) *Reduction by expired net capital loss*—(i) *In general.* The previously deducted branch capital loss for each branch loss year shall be reduced under this paragraph (d)(3) by the amount of any expired net capital loss with respect to that branch loss year. Expired net capital losses arising in years other than the branch loss year shall reduce the previously deducted branch capital loss for the branch loss year only to the extent that the previously deducted branch capital loss exceeds the net capital loss, if any, incurred by the transferor in the branch loss year. The previously deducted branch capital losses shall be reduced proceeding from the first branch loss year to the last branch loss year. For each branch loss year, expired net capital losses shall be applied to reduce the previously deducted branch capital loss for that year in the order in which the expired net capital losses arose.

(ii) *Existence of expired net capital loss.* An expired net capital loss exists with respect to a branch loss year to the extent that—

(A) The transferor incurred a net capital loss (within the meaning of section 1222(10));

(B) That net capital loss arose in the branch loss year or was available for carryover or carryback to the branch loss year under section 1212;

(C) That net capital loss has neither been allowed for any taxable year prior to the year of the transfer, nor given rise to a reduction of any previously deducted branch capital loss (pursuant to paragraph (c)(3) of this section) of any foreign branch of the transferor

upon any previous transfer to a foreign corporation; and

(D) The period during which the transferor may claim a capital loss deduction with respect to that net capital loss has expired.

(4) *Reduction for expired foreign tax credit*—(i) *In general.* The previously deducted branch ordinary loss and the previously deducted branch capital loss for each branch loss year remaining after the reductions described in paragraph (d)(2) and (3) of this section shall be further reduced under this paragraph (d)(4) proportionately by the amount of any expired foreign tax credit loss equivalent with respect to that branch loss year. The previously deducted branch losses shall be reduced proceeding from the first branch loss year to the last branch loss year. For each branch loss year, expired foreign tax credit loss equivalents shall be applied to reduce the previously deducted branch loss for that year in the order in which the expired foreign tax credits arose.

(ii) *Existence of foreign tax credit loss equivalent.* A foreign tax credit loss equivalent exists with respect to a branch loss year if—

(A) The transferor paid, accrued, or is deemed under section 902 or 960 to have paid creditable foreign taxes in a taxable year;

(B) The creditable foreign taxes were paid, accrued, or deemed paid in the branch loss year or were available for carryover or carryback to the branch loss year under section 904(c);

(C) No foreign tax credit with respect to the foreign taxes paid, accrued, or deemed paid has been taken because of the operation of section 904(a) or similar limitations provided by the Code or an applicable treaty, and such taxes have not given rise to a reduction (pursuant to this paragraph (d)(5)) of any previously deducted branch loss of the foreign branch for a prior taxable year or of any previously deducted branch losses of any foreign branch of the transferor upon a prior transfer to a foreign corporation; and

(D) The period during which the transferor may claim a foreign tax credit for the foreign taxes paid, accrued, or deemed paid has expired.

(iii) *Amount of foreign tax credit loss equivalent.* The amount of the foreign tax credit loss equivalent for the branch loss year with respect to the creditable foreign taxes described in paragraph (d)(4)(ii) of this section is the amount of those creditable foreign taxes divided by the highest rate of tax to which the transferor was subject in the loss year.

(5) *Reduction for expired investment credits*—(i) *In general.* The previously deducted branch ordinary loss and the previously deducted branch capital loss for each branch loss year shall be further reduced under this paragraph (d)(5) proportionately by the amount of any expired investment credit loss equivalent with respect to that branch year. The previously deducted branch losses shall be reduced proceeding from the first branch loss year to the last branch loss year. For each branch loss year, expired investment credit loss equivalents shall be applied to reduce the previously deducted branch loss for that year in the order in which the expired investment credits were earned.

(ii) *Existence of investment credit loss equivalent.* An investment credit loss equivalent exists with respect to a branch loss year if—

(A) The transferor earned an investment credit (within the meaning of section 46(a)) in a taxable year;

(B) The investment credit was earned in the branch loss year or was available for carryover or carryback to the branch loss year under section 39;

(C) The investment credit earned by the transferor in the credit year has been denied by section 38(a) or by similar provisions of the Code and has not given rise to a reduction (pursuant to this paragraph (d)(5)) of any previously deducted branch loss of the foreign branch for a preceding taxable year or of the previously deducted losses of any foreign branch of the transferor upon any previous transfer to a foreign corporation; and

(D) The period during which the transferor may claim the investment credit has expired.

(iii) *Amount of investment tax credit loss equivalent.* The amount of the investment credit loss equivalent for the branch loss year with respect to the investment credit described in paragraph

(d)(5)(ii) of this section is 85 percent of the amount of that investment credit divided by the highest rate of tax to which the transferor was subject in the loss year.

(e) *Amounts that reduce previously deducted losses subject to recapture*—(1) *In general.* This paragraph (e) describes five amounts that reduce the sum of the previously deducted branch ordinary losses and the sum of the previously deducted branch capital losses before they are taken into income under paragraph (b) of this section. Amounts representing ordinary income shall be applied to reduce first the sum of the previously deducted branch ordinary losses to the extent thereof, and then the sum of the previously deducted branch capital losses to the extent thereof. Similarly, amounts representing capital gains shall be applied to reduce first the sum of the previously deducted branch capital losses and then the sum of the previously deducted branch ordinary losses.

(2) *Taxable income.* The previously deducted losses shall be reduced by any taxable income of the foreign branch recognized through the close of the taxable year of the transfer, whether before or after any taxable year in which losses were incurred.

(3) *Amounts currently recaptured under section 904(f)(3).* The previously deducted losses shall be reduced by the amount recognized under section 904(f)(3) on account of the transfer.

(4) *Gain recognized under section 367(a).* The previously deducted branch losses shall be reduced by any gain recognized pursuant to section 367(a)(1) (other than by reason of the provisions of this section) upon the transfer of the assets of the foreign branch to the foreign corporation.

(5) *Amounts previously recaptured under section 904(f)(3)*—(i) *In general.* The previously deducted branch losses shall be reduced by the portion of any amount recognized under section 904(f)(3) upon a previous transfer of property that was attributable to the losses of the foreign branch, provided that the amount did not reduce any gain otherwise required to be recognized under section 367(a)(3)(C) and this section (or Revenue Ruling 78–201, 1978–1 C.B. 91).

(ii) *Portion attributable to the losses of the foreign branch*—(A) *Branch property.* The full amount recognized under section 904(f)(3) upon a previous transfer of property of the branch shall be treated as attributable to the losses of the foreign branch.

(B) *Non-branch property.* The portion of the amount previously recognized under section 904(f)(3) upon a transfer of non-branch property that was attributable to the losses of the foreign branch shall be the sum, over the taxable years in which the transferor sustained an overall foreign loss some portion of which was recaptured on the disposition, of the recaptured portions of those overall foreign losses after multiplication by the following fraction:

$$\frac{\text{Losses of the foreign branch for the year}}{\text{All foreign losses for the year}}$$

For purposes of this fraction, the term *losses of the foreign branch for the year* means the losses of the foreign branch that were taken into account under section 904(f)(2) in determining the amount of the transferor's overall foreign loss for the year, and the term *all foreign losses for the year* means all of the losses of the transferor that were taken into account under section 904(f)(2).

(6) *Amounts previously recognized under the rules of this section.* The previously deducted losses shall be reduced by the amounts previously recognized under the rules of this section upon a previous transfer of assets of the foreign branch.

(f) *Example.* The rules of paragraphs (b) through (e) of this section are illustrated by the following example.

Example. (i) *Facts.* X, a U.S. corporation, is a calendar year taxpayer. On January 1, 1981, X established a branch in foreign country A to manufacture and sell X's products in country A. On July 1, 1986, X organized corporation Y, a country A subsidiary, and transferred to Y all of the assets of its country A branch, including goodwill and going concern value. During the period from January 1, 1981, through July 1, 1986, X's country A branch earned income and incurred losses in the following amounts:

COUNTRY A BRANCH

Year	Ordinary income (loss)	Capital gain (loss)
1981	(200)	0
1982	(300)	(100)
1983	(400)	0
1984	(200)	0
1985	(100)	0
1986	50	0

At the time of the transfer of X's country A branch assets to Y, those assets had a fair market value of $2,500 and an adjusted basis of $1,000. For each of the assets, fair market value exceeded adjusted basis. X had no net capital loss or unused investment credit during any taxable year relevant to the transfer. In 1984, X incurred a net operating loss of $400, $200 of which was carried back to prior years. An additional $50 of the 1984 net operating loss was carried over to 1985. The remaining $150 of the 1984 net operating loss was not used in any year prior to the transfer. In 1979, X paid creditable foreign taxes of $330 that could not be claimed as a credit in that year or any earlier year because of section 904. Of those foreign taxes, $100 were carried over and claimed as a credit in 1983, but the remaining $230 were not used in any year prior to the transfer. X was not required to recognize any gain under section 904(f)(3) on account of the 1986 transfer or any prior transfer. X was not required to recognize gain upon the transfer under section 367(a) (other than by reason of the provisions of this section).

(ii) *Previously deducted losses.* The previously deducted losses of X's country A branch are $575 of ordinary losses and $25 of capital losses, computed as follows: Initially, the branch has previously deducted ordinary losses of $1,000 ($200+$300+$400+$100), and previously deducted capital losses of $100. (See paragraph (d)(1) of this section.)

(iii) *Expired losses and credits.* Under the facts of this example, there are no reductions for expired net ordinary losses or expired net capital losses under paragraph (d)(2) or (3) of this section. However, the previously deducted losses are reduced proceeding from the first branch loss year to the last branch loss year to reflect the expired foreign tax credit from 1979. The amount of the foreign tax credit loss equivalent with respect to 1981 is $500 ($230/.46). It reduces the previously deducted losses for 1981 proportionately. Thus, the previously deducted ordinary loss for 1981 is reduced from $200 to $0. (See paragraph (d)(4) of this section.) The amount of the foreign tax credit loss equivalent with respect to 1982 is $300 ($500−$200, *i.e.*, $138/.46). (See paragraph (d)(4)(ii)(C) of this section.) It reduces the previously deducted losses for 1982 proportionately. Thus, the previously deducted ordinary loss for 1982 is reduced from $300 to $75, and the previously deducted capital loss for 1982 is reduced from $100 to $25.

(iv) *Further reductions.* The previously deducted ordinary losses of $575 and the previously deducted capital losses of $25 are reduced by the taxable income earned by the branch prior to the date of the transfer ($250). (See paragraph (e)(2) of this section.) Since that income was ordinary income, it is applied first to reduce the previously deducted ordinary losses of $575 to $325. (See paragraph (e)(1) of this section.)

(v) *Recapture.* Since the gain realized by X upon its transfer of the branch assets to Y exceeds the sum of the previously deducted branch losses as defined and reduced above $325+$25), the limitation in paragraph (c)(2) of this section does not apply. Thus, X is required to recognize $325 of ordinary income and $25 of long-term capital gain upon the transfer. (See paragraph (b) and (c)(1) of this section.)

(g) *Definition of foreign branch*—(1) *In general.* For purposes of this section, the term *foreign branch* means an integral business operation carried on by a U.S. person outside the United States. Whether the activities of a U.S. person outside the United States constitute a foreign branch operation must be determined under all the facts and circumstances. Evidence of the existence of a foreign branch includes, but is not limited to, the existence of a separate set of books and records, and the existence of an office or other fixed place of business used by employees or officers of the U.S. person in carrying out business activities outside the United States. Activities outside the United States shall be deemed to constitute a foreign branch for purposes of this section if the activities constitute a permanent establishment under the terms of a treaty between the United States and the country in which the activities are carried out. Any U.S. person may be treated as having a foreign branch for purposes of this section, whether that person is a corporation, partnership, trust, estate, or individual.

(2) *More than one branch.* If a U.S. person carries on more than one branch operation outside the United States, then the rules of this section must be separately applied with respect to each foreign branch that is transferred to a foreign corporation. Thus, the previously deducted losses of one branch

may not be offset, for purposes of determining the gain required to be recognized under the rules of this section, by the income of another branch that is also transferred to a foreign corporation. Similarly, the losses of one branch shall not be recaptured upon a transfer of the assets of a separate branch. Whether the foreign activities of a U.S. person are carried out through more than one branch must be determined under all of the facts and circumstances. In general, a separate branch exists if a particular group of activities is sufficiently integrated to constitute a single business that could be operated as an independent enterprise. For purposes of determining the combination of activities that constitute a branch operation as defined in this paragraph (g), the nominal relationship among those activities shall not be controlling. Factors suggesting that nominally separate business operations constitute a single foreign branch include a substantial identity of products, customers, operational facilities, operational processes, accounting and record-keeping functions, management, employees, distribution channels, or sales and purchasing forces. For examples of the application of the principles of this paragraph (g)(2), see Revenue Ruling 81–82, 1981–1 C.B. 127.

(3) *Consolidated group.* For purposes of this section, the activities of each of two domestic corporations outside the United States will be considered to constitute a single foreign branch if—

(i) The two corporations are members of the same consolidated group of corporations; and

(ii) The activities of the two corporations in the aggregate would constitute a single foreign branch if conducted by a single corporation.

Notwithstanding the preceding rule of this paragraph (g)(3), gains of a foreign branch of a domestic corporation arising in a year in which that corporation did not file a consolidated return with a second domestic corporation shall not be applied to reduce the previously deducted losses of a foreign branch of the second corporation (but may be applied to reduce such losses of the foreign branch of the first corporation) upon the transfer of the two branches to a foreign corporation, even though the two domestic corporations file a consolidated return for the year in which the transfer occurs and the two branches are considered at that time to constitute a single foreign branch. For an example of the application of the principles of this paragraph (g)(3), see Revenue Ruling 81–89, 1981–1 C.B. 129.

(4) *Property not transferred.* A U.S. transferor's failure to transfer any property of a foreign branch shall be irrelevant to the determination of the previously deducted losses of the branch subject to recapture under the rules of this section. Thus, if the activities with respect to untransferred property constituted a part of the branch operation under the rules of this paragraph (g), then the losses generated by those activities shall be subject to recapture, notwithstanding the failure to transfer the property. For an example of the application of the principles of this paragraph (g)(4), see Revenue Ruling 80–247, 1980–2 C.B. 127, relating to property abandoned by the U.S. transferor.

(h) *Anti-abuse rule.* If—

(1) A U.S. person transfers property of a foreign branch to a domestic corporation for a principal purpose of avoiding the effect of this section; and

(2) The domestic corporation thereafter transfers the property of the foreign branch to a foreign corporation,

Then, solely for purposes of this section, that U.S. person shall be treated as having transferred the property of the branch directly to the foreign corporation. A U.S. person shall be presumed to have transferred property of a foreign branch for a principal purpose of avoiding the effect of this section if the property is transferred to the domestic corporation less than two years prior to the domestic corporation's transfer of the property to a foreign corporation. This presumption may be rebutted by clear evidence that the subsequent transfer of the property was not contemplated at the time of the initial transfer to the domestic corporation and that avoidance of the effect of this section was not a principal purpose for the transaction. A transfer may have more than one principal purpose.

(i) *Basis adjustments.* Basis adjustments reflecting gain recognized pursuant to this section shall be made as described in § 1.367(a)–1T(b)(4)(ii).

[T.D. 8087, 51 FR 17950, May 16, 1986]

§ 1.367(b)–2 Definitions.

(a)—(c) [Reserved]

(d) *Section 1248 amount.* In the case of an exchange of stock in a first-tier foreign corporation described in § 7.367 (b)–7 (c)(1)(i) of this chapter or a distribution by a foreign corporation described in § 7.367 (b)–10 (i) of this chapter in which an inclusion in gross income determined by reference to the ''section 1248 amount'' is required by those provisions, the term *section 1248 amount* means the net positive earnings and profits which would have been attributable under section 1248 and the regulations under that section to the stock of the foreign corporation exchanged if the stock has been sold in a transaction to which section 1248(a) applied. For all other purposes of this section, in the case of an exchange of stock in a first-tier foreign corporation to which section 367(b) applies, the term *section 1248 amount* means the earnings and profits or deficit in earnings and profits which would have been attributable under section 1248 and the regulations under that section to the stock of the foreign corporation exchanged if the stock had been sold in a transaction to which section 1248(a) applied.

(e) [Reserved]

(f) *All earnings and profits amounts.* For purposes of asset repatriations covered by §§ 7.367 (b)–5 (b), 7.367 (b)–6 (c), 7.367 (b)–7 (c)(2) and 7.367 (b)–10 (j) of this chapter, the term *all earnings and profits amount* means the net positive earnings and profits, if any, for all taxable years which are attributable to the stock of the foreign corporation exchanged under the principles of section 1246 or 1248 (whichever is applicable) and the regulations under that section. For all other purposes, the term *all earnings and profits amount* means the earnings and profits or deficit in earnings and profits for all taxable years which are attributable to the stock of the foreign corporation exchanged under the principles of section 1246 or 1248 (whichever is applicable) and the regulations under that section. The determination shall be made by applying section 1246 or 1248 as modified by §§ 7.367 (b)–2 through 7.367 (b)–12 of this chapter as if there were no distinction in those sections between earnings and profits accumulated before or after December 31, 1962.

[T.D. 8397, 57 FR 6555, Feb. 26, 1992]

§ 1.367(b)–7 Exchange of stock described in section 354.

(a)–(b) [Reserved]

(c) *Receipt of other stock*—(1) *General rule.* (i) [Reserved]

(ii) If an exchanging foreign corporation receives stock of a domestic corporation, or stock of a foreign corporation which is not a controlled foreign corporation, or stock of a controlled foreign corporation as to which any United States shareholder of the exchanging foreign corporation is not a United States shareholder, then there shall be added to the earnings and profits or deficit of the exchanging foreign corporation the section 1248 (c)(2) amount and the additional earnings and profits amount of the exchanging foreign corporation, computed as if all stock of the corporation whose stock is exchanged is owned by a United States shareholder. The amount added shall not be considered a dividend. Paragraph (c)(1)(iii) of this section, and not this paragraph (c)(1)(ii), applies if the stock received—

(A) Is of a domestic corporation which is a member of an affiliated group (as defined in section 1504(a), without application of section 1504(b)(3)) that also includes the exchanging foreign corporation as a member; and

(B) Is not received in an exchange pursuant to which the foreign corporation whose stock is exchanged transfers its assets to a domestic corporation.

(iii) For exchanges beginning after March 3, 1989, if the stock received is described in the last sentence of paragraph (c)(1)(ii) of this section, then the foreign corporation whose stock is exchanged will be considered to be a foreign corporation for purposes of section 354 or 356. This paragraph (c)(1)(iii) may be illustrated by the following examples:

Example 1. A U.S. parent corporation (USP) owns all of the stock of a foreign corporation (CFC1), which in turn owns all of the stock of a second foreign corporation (CFC2), which in turn owns all of the stock of a third foreign corporation (CFC3). USP also owns all of the stock of a U.S. subsidiary (Subsidiary). CFC2 and CFC3 have accumulated earnings and profits or accumulated deficits in earnings and profits. Subsidiary acquires all of the stock of CFC2 from CFC1 in exchange for stock of Subsidiary in a reorganization described in section 368(a)(1)(B). CFC1 will not recognize gain on the exchange. Moreover, CFC2's and CFC3's accumulated earnings and profits or accumulated deficits in earnings and profits will remain in CFC2 and CFC3, respectively, and will not be added to the earnings and profits or deficits in earnings and profits of CFC1.

Example 2. USP owns all of the stock of CFC1, which in turn owns all of the stock of CFC2. USP also owns all of the stock of a U.S. subsidiary (Subsidiary), which in turn owns all of the stock of CFC3. CFC3 acquires the assets of CFC2 in exchange for voting stock of Subsidiary in a reorganization described in section 368(a)(1)(C). Pursuant to the reorganization, CFC2 distributes the stock of Subsidiary to CFC1. CFC1 will not recognize gain on the exchange. In addition, CFC2's accumulated earnings and profits or accumulated deficits in earnings and profits will be added to CFC3's earnings and profits under section 381(c)(2), subject to the limitations contained in section 381 and in the regulations under that section.

(2) [Reserved]

[T.D. 8397, 57 FR 6555, Feb. 26, 1992]

§ 1.367(b)–8 Transfer of assets by a foreign corporation in an exchange described in section 351.

(a)—(b) [Reserved]

(c) *Transfer of stock in a controlled foreign corporation.* (1) [Reserved]

(2) If the transferor corporation transfers stock in a foreign corporation of which there is a United States shareholder immediately before the exchange, and the transferor receives stock of a domestic corporation, of a foreign corporation which is not a controlled foreign corporation, or of a controlled foreign corporation as to which any United States shareholder of the transferor is not a United States shareholder, paragraph (c)(1)(ii) of § 1.367(b)–7 shall apply. This paragraph (c)(2) may be illustrated by the following examples:

Example 1. A U.S. parent corporation (USP) owns all of the stock of a foreign corporation (CFC1), which in turn owns all of the stock of a second foreign corporation (CFC2). CFC1 and CFC2 have accumulated earnings and profits or accumulated deficits in earnings and profits. CFC1 transfers its CFC2 stock to a newly organized foreign corporation (Newco) that is not a controlled foreign corporation, in an exchange described in section 351(a). CFC1 receives 20 percent of the Newco stock in exchange for its CFC2 stock. Persons unrelated to USP and CFC1 receive the remaining 80 percent of the Newco stock. Pursuant to the first sentence of § 1.367(b)–7 (c)(1)(ii), CFC2's accumulated earnings and profits or accumulated deficits in earnings and profits will be added to CFC1's earnings and profits or deficits in earnings and profits.

Example 2. USP owns all of the stock of CFC1, which in turn owns all of the stock of CFC2. USP also owns all of the stock of a U.S. subsidiary (Subsidiary). Subsidiary has both voting and nonvoting stock outstanding. In a transaction occurring after March 3, 1989, CFC1 transfers its CFC2 stock to Subsidiary in an exchange described in section 351(a). CFC1 receives 80 percent of each class of Subsidiary's stock in exchange for its CFC2 stock. Pursuant to the last sentence of § 1.367(b)–7 (c)(1)(ii), CFC2's accumulated earnings and profits or accumulated deficits in earnings and profits will remain in CFC2, and will not be added to the earnings and profits or deficits in earnings and profits of CFC1.

[T.D. 8397, 57 FR 6555, Feb. 26, 1992]

§ 1.367(b)–9 Attribution of earnings and profits on an exchange described in section 351, 354, or 356.

(a) [Reserved]

(b) *General rule.* (1)—(3) [Reserved]

(4) For exchanges beginning on or after March 3, 1989, paragraph (b)(2) and (3) of § 7.367(b)–9 of this chapter will not apply if a U.S. shareholder described in §§ 7.367(b)–7 (b) or 7.367 (b)–8 (c)(1) of this chapter owns (applying the attribution rules of section 958) more than 50 percent of either the total voting power or the total value of the stock of both the corporation whose stock is received in the exchange and the corporation whose stock is exchanged. If this paragraph (b)(4) applies, the rules of section 381 (a) and the regulations under that section will determine the extent to which the corporation whose stock is received in the exchange (or other acquiring corporation) will succeed to the earnings and

profits or a deficit in earnings and profits of the corporation whose stock is exchanged and of lower-tier corporations. This paragraph (b)(4) may be illustrated by the following examples:

Example 1. A U.S. parent owns all of the stock of CFC1 and CFC2. CFC1 has accumulated earnings and profits or an accumulated deficit in earnings and profits. CFC2 acquires all of the stock of CFC1 from the U.S. parent in a reorganization described in section 368 (a)(1)(B). CFC2 will not succeed to the earnings and profits or the accumulated deficit in earnings and profits of CFC1.

Example 2. A U.S. parent owns all of the stock of CFC1, which in turn owns all of the stock of CFC2. The U.S. parent also owns all of the stock of CFC3. CFC2 has accumulated earnings and profits or an accumulated deficit in earnings and profits. CFC3 acquires all of the assets of CFC1, including the stock of CFC2, in a reorganization described in section 368(a)(1)(D). CFC3 will not succeed to the earnings and profits or the accumulated deficit in earnings and profits of CFC2.

[T.D. 8397, 57 FR 6556, Feb. 26, 1992]

§ 1.367(d)–1T Transfers of intangible property to foreign corporations (temporary).

(a) *Purpose and scope.* This section provides rules under section 367(d) concerning transfers of intangible property by U.S. persons to foreign corporations pursuant to section 351 or 361. Paragraph (b) of this section specifies the transfers that are subject to section 367(d) and the rules of this section, while paragraph (c) provides rules concerning the consequences of such a transfer. In general, the U.S. transferor will be treated as receiving annual payments contingent on productivity or use of the transferred property, over the useful life of the property (regardless of whether such payments are in fact made by the transferee). Paragraphs (d), (e), and (f) of this section provide rules for cases in which there is a later direct or indirect disposition of the intangible property transferred. In general, deemed annual license payments will continue if a transfer is made to a related person, while gain must be recognized immediately if the transfer is to an unrelated person. Paragraph (g) of this section provides several special rules, including a rule allowing appropriate adjustments where deemed payments under section 367(d) are not in fact received by the U.S. transferor of the intangible property, and a rule providing for a limited election to treat certain transfers of intangible property as sales at fair market value (in lieu of applying the general useful life-contingent payment rule). In addition, paragraph (g) of this section provides rules coordinating the application of section 367(d) with other relevant Code sections. Paragraph (h) of this section defines the term *related person* for purposes of this section. Finally, paragraph (i) of this section provides the effective date of this section. For rules concerning transfers of intangible property pursuant to section 332, see § 1.367(a)–5T(e).

(b) *Intangible property subject to section 367(d).* Section 367(d) and the rules of this section shall apply to the transfer of any intangible property, as defined in § 1.367(a)–1T(d)(5)(i). However, section 367(d) and the rules of this section shall not apply to the transfer of foreign goodwill or going concern value, as defined in §1.367(a)–1T(d)(5)(iii), or to the transfer of intangible property described in §1.367(a)–5T(b)(2). However, the transfer of those items to a foreign corporation is subject to the rules set forth in § 1.367(a)–6T, and the transfer of intangible property described in § 1.367(a)–5T(b)(2) is subject to the rules set forth in § 1.367(a)–5T. For a special rule relating to the transfer of operating intangibles, as defined in § 1.367(a)–1T(d)(5)(ii), see paragraph (g)(3) of this section. Transfers of intangible property to foreign corporations pursuant to section 351 or 361 are subject to the rules of this section regardless of whether the property is to be used in the United States, in connection with goods to be sold or consumed in the United States, or in connection with a trade or business outside the United States.

(c) *Deemed payments upon transfer of intangible property to foreign corporation*—(1) *In general.* If a U.S. person transfers intangible property that is subject to section 367(d) and the rules of this section to a foreign corporation in an exchange described in section 351 or 361, then such person shall be treated as having transferred that property in exchange for annual payments contingent on the productivity or use of the property. Such person shall, over

the useful life of the property, annually include in gross income an amount that represents an appropriate arms-length charge for the use of the property. The appropriate charge shall be determined in accordance with the provisions of section 482 and regulations thereunder. See § 1.482–2(d). The amount of the deemed payment thus calculated shall be reduced by any royalty or other periodic payment made or accrued by the transferee to an unrelated person during that taxable year for the right to use the intangible property. Amounts so included in the transferor's income shall be treated as ordinary income from sources within the United States. For purposes of computing estimated tax payments, deemed payments under this paragraph (c) shall be treated as received by the transferor on the last day of its taxable year.

(2) *Required adjustments.* The following adjustments shall be made with respect to a U.S. person's recognition of a deemed payment for the use of intangible property under this paragraph (c):

(i) For purposes of chapter 1 of the Code, the earnings and profits of the transferee foreign corporation shall be reduced by the amount of such deemed payment; and

(ii) For purposes of subpart F of part III of subchapter N of the Code, the transferee foreign corporation may treat such deemed payment as an expense (whether or not that amount is actually paid), properly allocated and apportioned to gross income subject to subpart F, in accordance with the provisions of §§ 1.954–1(c) and 1.861–8.

No other special adjustments to earning the profits, basis, or gross income shall be permitted by reason of the recognition of a deemed payment under this paragraph (c). However, see paragraph (g)(1) of this section for rules permitting the establishment of an account receivable with respect to deemed payments not actually received by the U.S. person.

(3) *Useful life.* For purposes of this section, the useful life of intangible property is the entire period during which the property has value. However, in no event shall the useful life of an item of intangible property be considered to exceed twenty years. If intangible property derives its value from secrecy or from protections afforded by law, the useful life of such property shall terminate when the property is no longer secret or no longer legally protected.

(4) *Blocked income.* No deemed payment included in a taxpayer's income under paragraph (c)(1) of this section shall be treated as deferrable income for purposes of applying rules relating to blocked foreign income. See Revenue Ruling 74–351, 1974–2 C.B. 144.

(d) *Subsequent transfer of stock of transferee foreign corporation to unrelated person*—(1) *Treatment as sale of intangible property.* If a U.S. person transfers intangible property that is subject to section 367(d) and the rules of this section to a foreign corporation in an exchange described in section 351 or 361, and within the useful life of the intangible property that U.S. transferor subsequently disposes of the stock of the transferee foreign corporation to a person that is not a related person (within the meaning of paragraph (h) of this section), then the U.S. transferor shall be treated as having simultaneously sold the intangible property to the person acquiring the stock of the transferee foreign corporation. The U.S. transferor shall be required to recognize gain (but not loss) from sources within the United States in an amount equal to the difference between the fair market value of the transferred intangible property on the date of the subsequent disposition and the U.S. transferor's former adjusted basis in that property (determined as of the original transfer). If the U.S. transferor's disposition of the stock of the transferee foreign corporation is subject to U.S. tax other than by reason of this paragraph (d), then the amount of gain otherwise required to be recognized with respect to the stock of the transferee foreign corporation shall be reduced by the amount of gain recognized with respect to the intangible property pursuant to this paragraph (d).

(2) *Required adjustments.* If a U.S. person disposes of the stock of a transferee foreign corporation, and under paragraph (d)(1) of this section is treated as having simultaneously sold intangible property, then, for purposes of

computing basis and earnings and profits, the person acquiring the stock of the transferee foreign corporation shall be deemed to have purchased that property at fair market value and to have immediately thereafter contributed it to the transferee foreign corporation in a transaction not covered by section 367(d). Therefore, for purposes of chapter 1 of the Code—

(i) The transferee foreign corporation's basis in the intangible property will be equal to its fair market value (as calculated for purposes of determining the gain required to be recognized by the U.S. transferor);

(ii) The acquiring person's basis in the stock of the transferee foreign corporation shall be determined as if no portion of the consideration given by the acquiring person for the stock is attributable to the intangible property; and

(iii) The earnings and profits of the transferee foreign corporation will not be affected by the transfer of its stock or the deemed transfer to it of the intangible property.

(e) *Subsequent transfer of stock of transferee foreign corporation to related person*—(1) *Transfer to related U.S. person treated as disposition of intangible property*. If a U.S. person transfers intangible property that is subject to section 367(d) and the rules of this section to a foreign corporation in an exchange described in section 351 or 361 and, within the useful life of the transferred intangible property, that U.S. transferor subsequently transfers the stock of the transferee foreign corporation to U.S. persons that are related to the transferor within the meaning of paragraph (h) of this section, then the following rules shall apply:

(i) Each such related U.S. person shall be treated as having received (with the stock of the transferee foreign corporation) a right to receive a proportionate share of the contingent annual payments that would otherwise be deemed to be received by the U.S. transferor under paragraph (c) of this section.

(ii) Each such related U.S. person shall, over the useful life of the property, annually include in gross income a proportionate share of the amount that would have been included in the income of the U.S. transferor pursuant to paragraph (c) of this section. Such amounts shall be treated as ordinary income from sources within the United States.

(iii) The amount of income required to be recognized by the U.S. transferor pursuant to the rule of paragraph (d)(1) of this section shall be reduced to the amount determined in accordance with the following formula:

$$\text{(d)(1) amount} \times (100\% - \text{(e) percentage})$$

For purposes of the above formula, the (*d*)(*1*) *amount* is the income that would otherwise be required to be recognized by the transferor corporation pursuant to paragraph (d)(1) of this section, and the (*e*) *percentage* is the percentage of the transferor corporation's total deemed rights to receive contingent annual payments under paragraph (c) of this section that is deemed to be transferred to related U.S. persons under the rules of this paragraph (e).

(iv) The rules of paragraphs (d) and (e) of this section shall be reapplied in the case of any later transfer of the stock of the transferee foreign corporation by a related U.S. person that received such stock in a transfer that was subject to the rules of this paragraph (e). For purposes of reapplying the rules of paragraphs (d) and (e), each such related U.S. person shall be treated as a U.S. transferor of intangible property to the transferee foreign corporation (to the extent of the interest attributed to such person pursuant to subdivision (i) of this paragraph (e)(1)).

(2) *Required adjustments.* If a U.S. person transfers stock of a transferee foreign corporation to a U.S. related person in a transaction that is subject to the rules of paragraph (e)(1) of this section, the following adjustments shall be made:

(i) For purposes of chapter 1 of the Code, the earnings and profits of the transferee foreign corporation shall be reduced by the amount of any payment deemed to be received by a related U.S. person under paragraph (e)(1)(ii) of this section;

(ii) For purposes of subpart F of part III of subchapter N of the Code, the transferee foreign corporation may allocate and apportion such deemed payments (whether or not such payments

are actually made to gross income subject to subpart F to the extent appropriate under the provisions of §§ 1.954–1(c) and 1.861–8;

(iii) For purposes of reapplying the rules of paragraph (d) and (e) of this section, if the related U.S. person is deemed to have received a right to contingent annual payments for the use of intangible property, then the U.S. related person shall be deemed to have held a proportionate share of the property with a basis equal to a proportionate share of the U.S. transferor's adjusted basis plus the gain, if any, recognized by the U.S. transferor on the earlier transfer of the stock to the U.S. related person, and then to have transferred that proportionate share of the property to the foreign corporation in a transfer subject to section 367(d); and

(iv) If the U.S. transferor is itself required to recognize gain upon the transfer by reason of the operation of paragraphs (d)(1) and (e)(1)(iii) of this section (because stock of the transferee foreign corporation is also transferred to unrelated persons), then those unrelated persons shall be deemed to have purchased a proportionate share of the transferred intangible property at fair market value and immediately contributed that property to the transferee foreign corporation, consistent with the general rule of paragraph (d)(2) of this section concerning transfers of stock to unrelated persons. Therefore, for purposes of chapter 1 of the Code—

(A) Each unrelated person's basis in the stock of the transferee foreign corporation shall be increased to the extent of the gain recognized by the U.S. transferor upon the deemed purchase of intangible property by that person; and

(B) The transferee foreign corporation will receive an increase in its basis in the transferred intangible property equal to the fair market value of that portion of the intangible property deemed to be contributed to the transferee foreign corporation by unrelated persons (as calculated for purposes of determining the gain required to be recognized by the U.S. transferor).

(3) *Transfer to related foreign person not treated as disposition of intangible property.* If a U.S. person transfers intangible property that is subject to section 367(d) and the rules of this section to a foreign corporation in an exchange described in section 351 or 361, and within the useful life of the transferred intangible property, that U.S. transferor subsequently transfers any of the stock of the transferee foreign corporation to one or more foreign persons that are related to the transferor within the meaning of paragraph (h) of this section, then the U.S. transferor shall continue to include in its income the deemed payments described in paragraph (c) of this section in the same manner as if the subsequent transfer of stock had not occurred. The rule of this paragraph (e)(3) shall not apply with respect to the subsequent transfer by the U.S. person of any of the remaining stock to any related U.S. person or unrelated person.

(4) *Proportionate share.* For purposes of this paragraph (e), any ''proportionate share'' shall be determined by reference to the fair market value (at the time of the original transfer) of the stock of the transferee foreign corporation that was transferred by the U.S. transferor and the fair market value of all of the stock of the transferee foreign corporation originally received by the U.S. transferor.

(f) *Subsequent disposition of transferred intangible property by transferee foreign corporation*—(1) *In general.* If a U.S. person transfers intangible property that is subject to section 367(d) and the rules of this section to a foreign corporation in an exchange described in section 351 or 361, and within the useful life of the intangible property that transferee foreign corporation subsequently disposes of the intangible property to an unrelated person, then—

(i) The U.S. transferor of the intangible property (or any person treated as such pursuant to paragraph (e)(1) of this section) shall be required to recognize gain from U.S. sources (but not loss) in an amount equal to the difference between the fair market value of the transferred intangible property on the date of the subsequent disposition and the U.S. transferor's former adjusted basis in that property (determined as of the orginial transfer); and

(ii) The U.S. transferor shall be required to recognize a deemed payment under paragraph (c) of this section for

that part of its taxable year that the intangible property was held by the transferee foreign corporation and thereafter shall not be required to recognize any further deemed payments under paragraph (c) or (e)(1) of this section with respect to the transferred intangible property disposed of by the transferee foreign corporation.

(2) *Required adjustments.* If a U.S. transferor is required to recognize gain under paragraph (f)(1) of this section, then—

(i) For purposes of chapter 1 of the Code, the earnings and profits of the transferee foreign corporation shall be reduced by the amount of gain required to be recognized; and

(ii) The U.S. transferor's recognition of gain will permit the establishment of an account receivable from the transferee foreign corporation, in accordance with paragraph (g)(1) of this section.

(3) *Subsequent transfer of intangible property to related person.* The requirement that a U.S. person recognize gain under paragraph (c) or (e) of this section shall not be affected by the transferee foreign corporation's subsequent disposition of the transferred intangible property to a related person. For purposes of any required adjustments, and of any accounts receivable created under paragraph (g)(1) of this section, the related person that receives the intangible property shall be treated as the transferee foreign corporation.

(g) *Special rules*—(1) *Establishment of accounts receivable*—(i) *In general.* If a U.S. person is required to recognize income under the provisions of paragraph (c), (e), or (f) of this section, and the amount deemed to be received is not actually paid by the transferee foreign corporation, then the U.S. person may establish an account receivable from the transferee foreign corporation equal to the amount deemed paid that was not actually paid. A separate account receivable must be established for each taxable year in which payments deemed to be received are not actually made. Payments received from the transferee foreign corporation must be designated as payments upon a particular account and must be deducted from that account. Accounts receivable under this paragraph (g)(1) may be established and paid without further U.S. income tax consequences to the U.S. transferor or the transferee foreign corporation. No interest shall be paid or accrued on an account receivable created under this paragraph (g)(1), nor shall any bad debt deduction be allowed under section 166 with respect to any failure to receive payment on an account.

(ii) *Unpaid receivable treated as contribution to capital.* If any portion of an account receivable established under this paragraph (g)(1) remains unpaid as of the last day of the third taxable year following the taxable year to which the account relates, then—

(A) Such portion shall be deemed to have been paid on that date; and

(B) The U.S. person shall be deemed to have contributed an equivalent amount to the capital of the foreign corporation, and the U.S. person's basis in the stock of the foreign corporation shall, therefore, be increased by that amount.

(2) *Election to treat transfer as sale.* A U.S. person that transfers intangible property to a foreign corporation in a transaction subject to section 367(d) may elect to recognize income in accordance with the rules of this paragraph (g)(2), if—

(i) The intangible property transferred constitutes an operating intangible, as defined in § 1.367(a)–1T(d)(5)(ii); or

(ii) The transfer of the intangible property is either legally required by the government of the country in which the transferee corporation is organized as a condition of doing business in that country, or compelled by a genuine threat of immediate expropriation by the foreign government; or

(iii)(A) The U.S. person transferred the intangible property to the foreign corporation within three months of the organization of that corporation and as part of the original plan of capitalization of that corporation;

(B) Immediately after the transfer, the U.S. person owns at least 40 percent but not more than 60 percent of the total voting power and total value of the stock of the transferee foreign corporation;

(C) Immediately after the transfer, at least 40 percent of the total voting

power and total value of the stock of the transferee foreign corporation is owned by foreign persons unrelated to the U.S. person;

(D) Intangible property constitutes at least 50 percent of the fair market value of the property transferred to the foreign corporation by the U.S. transferor; and

(E) The transferred intangible property will be used in the active conduct of a trade or business outside of the United States within the meaning of § 1.367(a)–2T and will not be used in connection with the manufacture or sale of products in or for use or consumption in the United States.

A person that makes the election under this paragraph (g)(2) shall not be subject to the provisions of paragraphs (c) through (f) of this section. Such person shall instead recognize in the year of the transfer ordinary income from sources within the United States in an amount equal to the difference between the fair market value of the intangible property transferred and its adjusted basis. A U.S. person shall make an election under this paragraph (g)(2) by notifying the Internal Revenue Service of the election in accordance with the requirements of section 6038B and regulations thereunder, and subsequently including the appropriate amounts in gross income in a timely filed tax return for the year of the transfer.

(3) *Intangible property transferred from branch with previously deducted losses.* If income is required to be recognized under section 904(f)(3) and the regulations thereunder or under § 1.367(a)–6T upon the transfer of intangible property of a foreign branch that had previously deducted losses, then the income recognized under those sections with respect to that property shall be credited against amounts that would otherwise be required to be recognized with respect to that same property under paragraphs (c) through (f) of this section in either the current or future taxable years. The amount recognized under section 904(f)(3) or § 1.367(a)–6T with respect to the transferred intangible property shall be determined in accordance with the following formula:

$$\text{loss recapture income} \times \frac{\text{gain from intangibles}}{\text{gain from all branch assets}}$$

For purposes of the above formula, the *loss recapture income* is the total amount required to be recognized by the U.S. transferor pursuant to section 904(f)(3) or § 1.367(a)–6T. The *gain from intangibles* is the total amount of gain realized by the U.S. transferor pursuant to section 904(f)(3) and § 1.367(a)–6T upon the transfer of items of intangible property that are subject to section 367(d). (''Gain from intangibles'' does not include gain realized upon the transfer of property described in § 1.367(a)–5T(b)(2), foreign goodwill or going concern value, or intangible property with respect to which the taxpayer has made the election provided for in § 1.367(d)–1T(g)(2).) The *gain from all branch assets* is the total amount of gain realized by the transferor upon the transfer of items of property of the branch in which gain is realized. The fraction shall not exceed 1.

(4) *Coordination with section 482*—(i) *In general.* Section 367(d) and the rules of this section shall not apply in the case of an actual sale or license of intangible property by a U.S. person to a foreign corporation. If an adjustment under section 482 is required with respect to an actual sale or license of intangible property, then section 367(d) and the rules of this section shall not apply with respect to the required adjustment. If a U.S. person transfers intangible property to a related foreign corporation without consideration, or in exchange for stock or securities of the transferee in a transaction described in sections 351 or 361, no sale or license subject to adjustment under section 482 will be deemed to have occurred. Instead, the U.S. person shall be treated as having made a transfer of the intangible property that is subject to section 367(d).

(ii) *Sham licenses and sales.* For purposes of paragraph (g)(4)(i) of this section, a purported sale or license of intangible property may be disregarded, and treated as a transfer subject to section 367(d) and the rules of this section, if—

(A) The purported sale or license is made to a foreign corporation in which the transferor holds (or is acquiring) an interest; and

(B) The terms of the purported sale or license differ so greatly from the economic substance of the transaction or the terms that would obtain between unrelated persons that the purported sale or license is a sham.

The terms of a purported sale or license, for purposes of applying the rule of this paragraph (g)(4)(ii), shall be determined by reference not only to the nominal terms of the agreement but also to the actual practice of the parties under that agreement. A sale or license of intangible property shall not be disregarded under this paragraph (g)(4)(ii) solely because other property of an integrated business is simultaneously transferred to the foreign corporation by the U.S. transferor in a transaction described in section 367(a)(1) or any statutory or regulatory exception to section 367(a)(1).

(5) *Determination of fair market value.* For purposes of determining the gain required to be recognized immediately under paragraph (d), (f), or (g)(2) of this section, the fair market value of transferred property shall be the single payment arm's-length price that would be paid for the property by an unrelated purchaser determined in accordance with the principles of section 482 and regulations thereunder. The allocation of a portion of the purchase price to intangible property agreed to by the parties to the transaction shall not necessarily be controlling for this purpose.

(6) *Anti-abuse rule.* If a U.S. person—

(i) Transfers intangible property to a domestic corporation with a principal purpose of avoiding the effect of section 367(d) and the rules of this section; and

(ii) Thereafter transfers the stock of that domestic corporation to a related foreign corporation,

then solely for purposes of section 367(d) that U.S. person shall be treated as having transferred the intangible property directly to the foreign corporation. A U.S. person shall be presumed to have transferred intangible property for a principal purpose of avoiding the effect of section 367(d) if the property is transferred to the domestic corporation less than two years prior to the transfer of the stock of that domestic corporation to a foreign corporation. The presumption created by the previous sentence may be rebutted by clear evidence that the subsequent transfer of the stock of the domestic transferee corporation was not contemplated at the time the intangible property was transferred to that corporation and that avoidance of section 367(d) and the rules of this section was not a principal purpose of the transaction. A transfer may have more than one principal purpose.

(h) *Related person.* For purposes of this section, persons are considered to be related if—

(1) They are partners or partnerships described in section 707(b)(1) of the Code; or

(2) They are related within the meaning of section 267 (b), (c), and (f) of the Code, except that—

(i) ''10 percent or more'' shall be substituted for ''more than 50 percent'' each place it appears; and

(ii) Section 1563 shall apply (for purposes of section 267(d)), without regard to section 1563(b)(2).

(i) *Effective date.* Except as specifically provided to the contrary elsewhere in this section, this section applies to transfers occurring after December 31, 1984.

[T.D. 8087, 51 FR 17953, May 16, 1986]

§ 1.367(e)–0T Treatment of section 355 distributions by U.S. corporations to foreign persons; table of contents.

This section lists captioned paragraphs contained in § 1.367(e)–1T.

§ 1.367(e)–1T Treatment of section 355 distributions by U.S. corporations to foreign persons.

(a) Purpose and scope.

(b) Recognition of gain required.

(1) In general.

(2) Computation of gain of the distributing corporation.

(3) Treatment of foreign distributee.

(4) Nonapplication of section 367(a) principles that provide for exceptions to gain recognition.
(5) Partnerships, trusts, and estates.
(i) In general.
(ii) Written statement.
(6) Anti-abuse rule.
(c) Nonrecognition of gain.
(1) Distribution by a U.S. real property holding corporation of stock in a second U.S. real property holding corporation.
(2) Distribution by a publicly traded corporation.
(i) Conditions for nonrecognition.
(ii) Recognition of gain if foreign distributee owns 5 percent of distributing corporation.
(iii) Reporting requirements.
(iv) Timely filed return.
(v) Relation to other nonrecognition provisions.
(3) Distribution of certain domestic stock to 10 or fewer qualified foreign distributees.
(i) In general.
(ii) Conditions for nonrecognition.
(iii) Agreement to recognize gain.
(iv) Waiver of period of limitation.
(v) Annual certifications and other reporting requirements.
(vi) Special rule for nonrecognition transactions.
(vii) Recognition of gain.
(viii) Failure to comply.
(d) Other consequences.
(1) Exchange under section 897(e)(1).
(2) Dividend treatment under section 1248.
(3) Distribution of stock of a passive foreign investment company. [Reserved]
(4) Reporting under section 6038B.
(e) Examples.
(f) Effective date.

[T.D. 8682, 61 FR 42169, Aug. 14, 1996]

§ 1.367(e)–1T Treatment of section 355 distributions by U.S. corporations to foreign persons (temporary).

(a) *Purpose and scope.* This section provides rules concerning the recognition of gain by a domestic corporation on a distribution that qualifies for nonrecognition under section 355 of stock or securities of a domestic or foreign corporation to a person who is not a U.S. person. Paragraph (b) of this section states as a general rule that gain recognition is required on the distribution. Paragraph (c) of this section provides exceptions to the gain recognition rule for certain distributions of stock or securities of a domestic corporation. Paragraph (d) of this section refers to other consequences of distributions described in this section. Paragraph (e) of this section provides examples of these rules. Finally, paragraph (f) of this section specifies the effective date of this section.

(b) *Recognition of gain required*—(1) *In general.* (i) If a domestic corporation (distributing corporation) makes a distribution that qualifies for nonrecognition under section 355 of stock or securities of a domestic or foreign corporation (controlled corporation) to a person who is not a qualified U.S. person, then, except as provided in paragraph (c) of this section, the distributing corporation shall recognize gain (but not loss) on the distribution under section 367(e)(1). No gain is required to be recognized under this section with respect to a distribution to a qualified U.S. person of stock or securities that qualifies for nonrecognition under section 355. For purposes of this section, a qualified U.S. person is—

(A) A citizen or resident of the United States; and

(B) A domestic corporation.

(ii) In the case of stock or securities owned through a partnership, trust, or estate, see paragraph (b)(5) of this section.

(2) *Computation of gain of the distributing corporation.* The gain recognized by the distributing corporation under paragraph (b)(1) of this section shall be equal to the excess of the fair market value of the stock or securities distributed to persons who are not qualified U.S. persons (determined as of the time of the distribution) over the distributing corporation's adjusted basis in the stock or securities distributed to such distributees. For purposes of the preceding sentence, the distributing corporation's adjusted basis in each unit of each class of stock or securities distributed to a distributee shall be equal to the distributing corporation's total adjusted basis in all of the units of the respective class of stock or securities owned immediately before the distribution, divided by the total number of units of the class of stock or securities owned immediately before the distribution.

(3) *Treatment of distributee.* If the distribution otherwise qualifies for nonrecognition under section 355, each distributee shall be considered to have received stock or securities in a distribution qualifying for nonrecognition

under section 355, even though the distributing corporation may recognize gain on the distribution under this section. Thus, the distributee shall not be considered to have received a distribution described in section 301 or a distribution in an exchange described in section 302(b) upon the receipt of the stock or securities of the controlled corporation. Except where section 897(e)(1) and the regulations thereunder cause gain to be recognized by the distributee, the basis of the distributed domestic or foreign corporation stock in the hands of the foreign distributee shall be the basis of the distributed stock determined under section 358 without any increase for any gain recognized by the domestic corporation on the distribution.

(4) *Nonapplication of section 367(a) principles that provide for exceptions to gain recognition.* Paragraph (b)(1) of this section requires recognition of gain notwithstanding the application of any principles contained in section 367(a) or the regulations thereunder. The only exceptions to paragraph (b)(1) of this section are contained in paragraph (c) of this section. None of these exceptions applies to distributions of stock or securities of a foreign corporation.

(5) *Partnerships, trusts, and estates*—(i) *In general.* For purposes of this section, stock or securities owned by or for a partnership (whether foreign or domestic) shall be considered to be owned proportionately by its partners. In applying this principle, the proportionate share of the stock or securities of the distributing corporation considered to be owned by a partner of the partnership at the time of the distribution shall equal the partner's distributive share of gain that would be realized by the partnership from a sale of stock of the distributing corporation immediately before the distribution (without regard to whether, under the particular facts, any gain would actually be realized on the sale for U.S. tax purposes), determined under the rules and principles of sections 701 through 761 and the regulations thereunder. For purposes of this section, stock or securities owned by or for a trust or estate (whether foreign or domestic) shall be considered to be owned proportionately by the persons who would be treated as owning such stock or securities under sections 318(a)(2)(A) and (B). In applying section 318(a)(2)(B), if a trust includes interests that are not actuarially ascertainable and a principal purpose of the inclusion of the interests is the avoidance of section 367(e)(1), all such interests shall be considered to be owned by foreign persons. In a case where an interest holder in a partnership, trust, or estate that owns stock of the distributing corporation is itself a partnership, trust, or estate, the rules of this paragraph (b)(5) apply to individuals or corporations that own (direct or indirect) interests in the upper-tier partnership, trust or estate.

(ii) *Written statement.* If, prior to the date on which the distributing corporation must file its income tax return for the year of the distribution, the corporation obtains a written statement, signed under penalties of perjury by an interest holder in a partnership, trust, or estate that receives a distribution described in paragraph (b)(1) of this section from the corporation, which statement certifies that the interest holder is a qualified U.S. person (as defined in paragraph (b)(1)(i) of this section), no liability shall be imposed under paragraph (b)(1) of this section with respect to the distribution to the partnership, trust, or estate to the extent of the interest holder's interest in the partnership, trust, or estate, unless the distributing corporation knows or has reason to know that the statement is false, or it is subsequently determined that the interest holder, in fact, was not a qualified U.S. person at the time of the distribution. The written statement must set forth the amount of the interest holder's proportionate interest in the partnership, trust, or estate as determined under paragraph (b)(5)(i) of this section and must set forth the amount of such entity's proportionate interest in the distributing and controlled corporation, as well as the interest holder's name, taxpayer identification number, home address (in the case of an individual) or office address and place of incorporation (in the case of a corporation). The written statement must be retained by the distributing corporation with its books and records for a period of three calendar years following the close of the

last calendar year in which the corporation relied upon the statement.

(6) *Anti-abuse rule.* If a domestic corporation is directly or indirectly formed or availed of by one or more foreign persons to hold the stock of a second domestic corporation for a principal purpose of avoiding the application of section 367(e)(1) and the requirements of this section, any distribution of stock or securities to which section 355 applies by such second domestic corporation shall be treated for Federal income tax purposes as a distribution to such foreign person or persons, followed by a transfer of the stock or securities to the first domestic corporation. The qualification of the distribution to the foreign person for an exception to the general gain recognition rule of paragraph (b)(1) of this section, and the consequences of the transfer to the first domestic corporation under this section, shall be determined in accordance with all of the facts and circumstances.

(c) *Nonrecognition of gain*—(1) *Distribution by a U.S. real property holding corporation of stock in a second U.S. real property holding corporation.* Gain shall not be recognized under paragraph (b) of this section by a domestic corporation making a distribution that qualifies for nonrecognition under section 355 of stock or securities of a domestic controlled corporation to a person who is not a qualified U.S. person (as defined in paragraph (b)(1)(i) of this section) if the conditions specified in paragraphs (c)(1)(i) and (ii) of this section are both satisfied:

(i) Immediately after the distribution, both the distributing and controlled corporations are U.S. real property holding corporations (as defined in section 897(c)(2)). For the treatment of the distribution under section 897, see section 897(e)(1) and the regulations thereunder.

(ii) The distributing corporation attaches to its timely filed Federal income tax return for the taxable year in which the distribution occurs a statement titled ''Section 367(e)(1)—Reporting of Section 355 Distribution by U.S. Real Property Holding Corporation'', signed under penalties of perjury by an officer of the corporation, disclosing the following information—

(A) A statement that the distribution is one to which paragraph (c)(1) of this section applies; and

(B) A description of the transaction in which one U.S. real property holding corporation distributes the stock of another U.S. real property holding corporation in a transaction that is described under section 355.

(iii) For purposes of this paragraph (c)(1), an income tax return (including an amended return) will be considered a timely filed Federal income tax return if it is filed prior to the time that the Internal Revenue Service discovers that the reporting requirements of this paragraph have not been satisfied.

(2) *Distribution by a publicly traded corporation—(i) Conditions for nonrecognition.* Except as provided by paragraph (c)(2)(ii) of this section, gain shall not be recognized under paragraph (b) of this section by a domestic corporation making a distribution that qualifies for nonrecognition under section 355 of stock or securities of a domestic controlled corporation to a person who is not a qualified U.S. person (as defined in paragraph (b)(1)(i) of this section) if both of the following conditions are satisfied:

(A) Stock of the domestic controlled corporation with a value of more than 80 percent of the outstanding stock of the corporation is distributed with respect to one or more classes of the outstanding stock of the distributing corporation that are regularly traded on an established securities market, as defined in §1.897–1(m)(1) and (3), located in the United States. Stock is considered to be regularly traded if it is regularly quoted by brokers or dealers making a market in such interests. A broker or dealer is considered to make a market only if the broker or dealer holds himself out to buy or sell interests in the stock at the quoted price.

(B) The distributing corporation satisfies the reporting requirements contained in paragraph (c)(2)(iii) of this section.

(ii) *Recognition of gain if distributee owns 5 percent of distributing corporation.* If, at the time of the distribution, the distributing corporation knows or has reason to know that any distributee who is not a qualified U.S. person (as defined in paragraph (b)(1)(i) of this

section) owns, directly, indirectly, or constructively (using the rules of sections 897(c)(3) and (c)(6)(C), but subject to the rules of paragraph (b)(5) of this section), more than 5 percent (by value) of a class of stock or securities of the distributing corporation with respect to which the stock or securities of the controlled corporation is distributed (a 5-percent shareholder), the distributing corporation will qualify for nonrecognition under paragraph (c)(2)(i) of this section if, with respect to such 5-percent shareholder, either—

(A) The distribution qualifies for nonrecognition under paragraph (c)(3) of this section; or

(B) The distributing corporation recognizes gain (but not loss) on the distribution under paragraph (b) of this section.

(iii) *Reporting Requirements.* To qualify for nonrecognition treatment under paragraph (c)(2)(i) of this section, the distributing corporation must attach to its timely filed Federal income tax return, for the taxable year in which the distribution occurs a statement titled ''Section 367(e)(1)—Reporting of Section 355 Distribution by U.S. Publicly Traded Corporation to Foreign Persons,'' signed under penalties of perjury by an officer of the corporation, disclosing the following information:

(A) A statement that the distribution is one to which paragraph (c)(2) of this section applies.

(B) A description of the transaction in which the distributing corporation that is publicly traded on a U.S. securities market distributed stock or securities of a domestic controlled corporation.

(C) The U.S. securities market on which the stock of the distributing corporation is publicly traded.

(D) A statement that, at the time of the distribution, either—

(*1*) The distributing corporation does not know or have reason to know that any distributee who is not a qualified U.S. shareholder (as defined in paragraph (b)(1)(i) of this section) is a 5-percent shareholder; or

(*2*) The distributing corporation knows or has reason to know that one or more distributees who are not qualified U.S. persons are 5-percent shareholders, and, that with respect to each such 5-percent shareholder, either—

(*i*) Gain will not be recognized because the requirements of paragraph (c)(3) of this section are satisfied; or

(*ii*) Gain (but not loss) will be recognized in accordance with paragraph (b) of this section.

(iv) *Timely filed return.* For purposes of this paragraph (c)(2), an income tax return (including an amended return) will be considered a timely filed Federal income tax return if it was received prior to the time that the Internal Revenue Service discovers that the reporting requirements of this paragraph (c)(2) have not been satisfied.

(v) *Relation to other nonrecognition provisions.* If the distribution of the stock and securities of the controlled corporation also qualifies for nonrecognition under paragraph (c)(1) of this section, the distributing corporation shall be entitled to nonrecognition under paragraph (c)(1) of this section and not this paragraph (c)(2).

(3) *Distribution of certain domestic stock to 10 or fewer qualified foreign distributees*—(i) *In general.* (A) Gain shall not be recognized under paragraph (b) of this section by a domestic corporation making a distribution that qualifies for nonrecognition under section 355 of stock or securities of a domestic controlled corporation with respect to a foreign distributee (defined in paragraph (c)(3)(i)(B) of this section) that is a qualified foreign distributee (defined in paragraph (c)(3)(i)(C) of this section), provided that each of the conditions contained in paragraph (c)(3)(ii) of this section is satisfied. If one or more foreign distributees are not treated as qualified foreign distributees, the distributing corporation shall recognize a percentage of the gain realized on the distribution, equal to the percentage of its stock owned immediately before the distribution, directly or indirectly, by foreign distributees who are not qualified foreign distributees. See paragraph (b)(5) of this section for rules regarding the ownership of stock held by a partnership, trust, or estate.

(B) For purposes of this paragraph (c)(3), the term *foreign distributee* is any

person who is not a qualified U.S. person (as defined in paragraph (b)(1)(i) of this section) if such person—

(*1*) Owned stock or securities of the distributing corporation immediately prior to the distribution;

(*2*) Owned stock or securities of the distributing corporation within two years prior to the distribution and directly, indirectly, or constructively (using the rules of section 318) owns 50 percent or more of either the total voting power or the total value of the stock of the distributing or controlled corporation immediately after the distribution; or

(*3*) Is a transferee or substitute distributee, as defined in paragraph (c)(3)(vi)(C) or (D) of this section.

(C) For purposes of this section, except as provided by paragraph (c)(3)(i)(D) of this section, the term *qualified foreign distributee* is a foreign distributee that, during the entire period for which the agreement to recognize gain (described in paragraph (c)(3)(iii) of this section) is in effect with respect to the distributee, is either an individual or a corporation (as defined in section 7701(a)(3)), resident of a foreign country that maintains a comprehensive income tax treaty with the United States which contains an information exchange provision. However, no more than ten foreign distributees in total may be current or former qualified foreign distributees (including any transferee or substitute distributees as defined in paragraph (c)(3)(vi)(C) or (D) of this section) during the entire term of the gain recognition agreement. See, however, paragraph (c)(3)(vi)(G) of this section for special rules applicable to substitute distributees.

(D) Unless the distributing corporation obtains a ruling from the Internal Revenue Service to the contrary, no foreign distributee shall be treated as a qualified foreign distributee if it holds its interest in the distributing corporation through a partnership, trust or estate, characterized as such under the taxation laws of the United States or any entity that is treated as fiscally transparent under the taxation laws of the foreign country in which it is a resident if such country maintains a comprehensive income tax treaty with the United States which contains an information exchange provision.

(ii) *Conditions for nonrecognition*. A distribution of stock or securities described in paragraph (c)(3)(i) of this section to a qualified foreign distributee shall not result in the recognition of gain if each of the following conditions is satisfied:

(A) If more than ten foreign distributees, at any time during the entire term of the gain recognition agreement, are eligible to be qualified foreign distributees, the distributing corporation shall designate the foreign distributees to be considered qualified foreign distributees for which nonrecognition is claimed under this paragraph (c)(3).

(B) Immediately after the distribution and on each testing date beginning after the distribution and during the period that the agreement to recognize gain (described in paragraph (c)(3)(iii) of this section) is in effect, the value of the distributing corporation (that is, the fair market value of the assets of the distributing corporation, less all liabilities of the distributing corporation) must exceed the amount of gain that the distributing corporation realized, but did not recognize (on or after the distribution) under this paragraph (c)(3), as a consequence of the distribution with respect to qualified foreign distributees. This requirement will be deemed satisfied for any testing date upon which the adjusted basis of the distributing corporation's assets, less all liabilities of the distributing corporation, exceeds the amount of the deferred gain. A testing date is—

(*1*) The last day of any taxable year of the distributing corporation during which the agreement to recognize gain is in effect; and

(*2*) Any date upon which the distributing corporation distributes property to its shareholders under section 301(a).

(C) At all times until the close of the 120-month period following the end of the taxable year of the distributing corporation in which the distribution was made, except under the circumstances and subject to the consequences prescribed in paragraphs (c)(3)(vi) and (vii) of this section, all qualified foreign distributees must continue to own, directly or indirectly, all

of the stock and securities of the distributing and controlled corporations that the qualified foreign distributee owned, directly or indirectly, immediately after the distribution (including any stock and securities of the distributing or controlled corporation later acquired from the distributing or controlled corporation for which the distributee has a holding period determined under section 1223 by reference to the stock or securities).

(D) The distribution of stock or securities described in paragraph (c)(3)(i) of this section must not be a distribution pursuant to which the distributing corporation goes out of existence.

(E) The distributing corporation must file an agreement to recognize gain, and the controlled corporation must agree to be secondarily liable in the event that the distributing corporation does not pay the tax due upon a recognition event described in paragraph (c)(3)(vii) of this section. The agreement is described in paragraph (c)(3)(iii) of this section and filed by the distributing corporation with its Federal income tax return for its taxable year in which the distribution is made.

(F) For each of the taxable years of the distributing corporation, beginning with the taxable year of the distribution and ending with the taxable year that includes the close of the 120-month period following the end of the taxable year of the distributing corporation in which the distribution was made, all qualified foreign distributees and the controlled corporation must provide to the distributing corporation the annual certifications described in paragraph (c)(3)(v) of this section, and the distributing corporation must file the certifications with its tax return.

(iii) *Agreement to recognize gain*. The agreement to recognize gain required by this paragraph (c)(3)(iii) shall be prepared by or on behalf of the distributing corporation and signed under penalties of perjury by an authorized officer of the distributing corporation. An authorized officer of the controlled corporation must also sign the agreement under penalties of perjury, agreeing to extend the statute of limitations and accept liability for the tax in the event that the distributing corporation fails to pay the tax upon a recognition event. The agreement provided by the distributing corporation shall set forth the following items, under the heading ''GAIN RECOGNITION AGREEMENT UNDER §1.367(e)–1T(c)(3)(iii)'', with paragraphs labeled to correspond with such items:

(A) A declaration that the distribution is one to which paragraph (c)(3) of this section applies.

(B) A description of each qualified foreign distributee, which shall include the qualified foreign distributee's—

(*1*) Name;

(*2*) Address;

(*3*) Taxpayer identification number (if any); and

(*4*) Residence and citizenship (in the case of an individual) or place of incorporation and country of residence (in the case of a qualified foreign distributee that is a corporation for Federal income tax purposes under section 7701(a)(3)).

(C) A description of the stock and securities of the distributing and controlled corporations owned (directly or indirectly) by each qualified foreign distributee, including—

(*1*) The number or amount of shares;

(*2*) The type of stock or securities;

(*3*) The fair market values of the stock and securities of the controlled corporation owned (directly or indirectly) by the qualified foreign distributee(s), determined immediately before and immediately after the distribution;

(*4*) The distributing corporation's adjusted basis (immediately before the distribution) in the stock and securities of the controlled corporation distributed to the qualified foreign distributees;

(*5*) The fair market value of the distributing corporation (fair market value of its assets, less all liabilities of the distributing corporation) immediately after the distribution. Such amount must exceed the amount of gain that the distributing corporation realized, but did not recognize under this paragraph (c)(3), on the distribution to qualified foreign distributees. Alternatively, the fair market value standard will be deemed satisfied if the

adjusted basis of the assets of the distributing corporation, less all liabilities of the distributing corporation, exceeds the amount of the deferred gain.

(6) For each applicable valuation, a summary of the method (including appraisals, if any) used for determining the fair market values required by this paragraph (c)(3)(iii).

(D) The distributing corporation's agreement to recognize gain in accordance with paragraph (c)(3)(vii) of this section.

(E) The controlled corporation's agreement to be secondarily liable for the distributing corporation's tax liability, pursuant to the gain recognition agreement described in this paragraph (c)(3)(iii).

(F) A waiver of the period of limitations by both the distributing and controlled corporation as described in paragraph (c)(3)(iv) of this section.

(G) An attached statement from each qualified foreign distributee declaring that the qualified foreign distributee will provide to the distributing corporation the annual certifications described in paragraph (c)(3)(v)(A) of this section for each of the taxable years of the distributing corporation, beginning with the taxable year of the distribution and ending with the taxable year that includes the close of the 120-month period following the taxable year of the distributing corporation in which the distribution was made. The attached statements shall be signed under penalties of perjury by an authorized officer in the case of any qualified foreign distributee that is a corporation for Federal income tax purposes or by the individual in the case of a qualified foreign distributee that is an individual.

(H) An attached statement from the controlled corporation declaring that it will provide to the distributing corporation the annual certifications described in paragraph (c)(3)(v)(B) of this section.

(I) An agreement by the distributing corporation to attach to its tax returns the annual certifications of the qualified foreign distributees and the controlled corporation described in paragraphs (c)(3)(v)(A) and (B) of this section, respectively, and to meet any other reporting requirement in accordance with paragraph (c)(3)(v) of this section.

(iv) *Waiver of period of limitation.* The distributing corporation and the controlled corporation must file, with the gain recognition agreement described in paragraph (c)(3)(iii) of this section, a waiver of the period of limitation on the assessment of tax upon the gain realized on the distribution to the qualified foreign distributee(s). The waiver shall be executed on Form 8838, substitute form, or such other form as may be prescribed by the Commissioner for this purpose and shall extend the period for assessment of such tax to a date not earlier than the close of the thirteenth full year following the taxable year that includes the distribution. A properly executed Form 8838, substitute form, or such other form authorized by this paragraph (c)(3)(iv) shall be deemed to be consented to and signed by a Service Center Director or the Assistant Commissioner (International) for purposes of §301.6501(c)–1(d) of this chapter.

(v) *Annual certifications and other reporting requirements.* For each of the taxable years of the distributing corporation, beginning with the taxable year of the distribution and ending with the taxable year that includes the close of the 120-month period following the end of the taxable year of the distributing corporation in which the distribution was made, the distributing corporation must file with its Federal income tax return the annual certifications for that year described in this paragraph (c)(3)(v).

(A) Each current qualified foreign distributee must provide to the distributing corporation an annual certification, signed under penalties of perjury by an authorized officer of the qualified foreign distributee that is a corporation or by the qualified foreign distributee that is an individual (as the case may be). Each annual certification must identify the distribution with respect to which it is given by setting forth the date and a summary description of the distribution. In the annual certification, the qualified foreign distributee must declare that—

(*1*) The qualified foreign distributee continues to satisfy paragraph (c)(3)(i)(C) of this section; and

(*2*) The qualified foreign distributee continues to own, directly or indirectly, without interruption, the stock and securities of the distributing and controlled corporations (except to the extent the stock or securities have been disposed of in a transfer described in paragraph (c)(3)(vi) of this section).

(B) The controlled corporation must provide a certification to the distributing corporation, signed under penalties of perjury by an authorized officer of the corporation, that lists each current qualified foreign distributee holding (directly or indirectly) stock of the controlled corporation and its direct or indirect ownership interest in the controlled corporation at both the first day and the last day of the taxable year for which the distributing corporation files its Federal income tax return, and certifies the accuracy of that list.

(C) The distributing corporation must attach to the annual certifications described in paragraphs (c)(3)(v)(A) and (B) of this section, a statement signed under penalties of perjury by an authorized officer of the corporation, in which the corporation declares that, to the best of its knowledge, the annual certifications are true.

(D) The distributing corporation must also attach to the annual certifications a separate statement indicating—

(*1*) The names and addresses of each current and each former qualified foreign distributee;

(*2*) The percentage of direct or indirect ownership that the qualified foreign distributees retain in the distributing corporation at year-end; and

(*3*) A certification that the value of the distributing corporation (or the adjusted basis of its assets), less all of the liabilities of the distributing corporation on all testing dates, exceeded the amount of the gain deferred as of the testing date.

(vi) *Special rule for nonrecognition transactions.* (A) Gain shall not be recognized under paragraph (c)(3)(vii) of this section if the distributing or controlled corporation is acquired by a successor-in-interest (described in paragraph (c)(3)(vi)(B) of this section), or upon a direct or indirect disposition by a qualified foreign distributee of stock or securities of a distributing or controlled corporation (or a successor-in-interest) that is subject to a gain recognition agreement described in paragraph (c)(3)(iii) of this section, if the requirements of this paragraph (c)(3)(vi) are satisfied and the disposition consists of a transfer described in section 332, 337, 351, 354, 355, 356, or 361 that does not result in a substantial transformation (as defined in paragraph (c)(3)(vii)(B) of this section). For special rules regarding transfers described in section 355, see paragraph (c)(3)(vi)(G) of this section.

(B) For purposes of this section, the term *successor-in-interest* refers to any domestic corporation that acquires the assets of the distributing or controlled corporation in a transaction described in section 381(a) to which this paragraph (c)(3)(vi) applies.

(C) For purposes of this section, the term *transferee distributee* refers to:

(*1*) Any corporation whose stock or securities are exchanged for the stock or securities of the distributing or controlled corporation (or a successor-in-interest), or of another transferee distributee, in a transaction described in section 351, 354, or sections 361 and 381(a)(2), to which this paragraph (c)(3)(vi) applies.

(*2*) Any corporation that acquires the assets of any qualified foreign distributee, transferee distributee or substitute distributee in a transaction described in section 381(a).

(D) For purposes of this section, the term *substitute distributee* refers to any person that acquires the stock or securities of the distributing or controlled corporation (or a successor-in-interest), or of a qualified foreign distributee, in a section 355 distribution.

(E) Gain shall not be recognized under paragraph (c)(3)(vii) of this section in a transaction involving a transfer of the assets of the distributing or controlled corporation to a successor-in-interest, only if the following information and agreements are included with the first annual certification thereafter filed under paragraph (c)(3)(v) of this section:

(*1*) A description of the transaction (including a statement of applicable Internal Revenue Code provisions, and a description of stock or securities transferred, exchanged, or received in the transaction).

(*2*) A description of the successor-in-interest (including the name, address, taxpayer identification number, and place of incorporation of the successor in interest).

(*3*) An agreement of the successor-in-interest, signed under penalties of perjury by an authorized officer of the successor-in-interest corporation, to succeed to all of the responsibilities and duties of the distributing corporation or the controlled corporation (as the case may be) under this paragraph (c)(3) as if the successor-in-interest were the distributing or controlled corporation.

(F) Gain shall not be recognized under paragraph (c)(3)(vii) of this section in a transaction described in paragraph (c)(3)(vi)(A) of this section in which a qualified foreign distributee, directly or indirectly, disposes of, and a transferee distributee acquires, stock or securities of the distributing or controlled corporation (or a successor-in-interest), or another transferee distributee, only if the transferee distributee is either a qualified U.S. person or qualifies as a qualified foreign distributee under this paragraph (c)(3) and the following information and agreements are included with the first annual certification thereafter filed under paragraph (c)(3)(v) of this section:

(*1*) A description of the transaction (including a statement of applicable Internal Revenue Code provisions, and a description of the stock or securities of the distributing or controlled corporation (or a successor-in-interest) owned, directly or indirectly, by qualified foreign distributees immediately after the transaction).

(*2*) An agreement of the distributing corporation and the controlled corporation (amending the agreement described in paragraph (c)(3)(iii) of this section), signed under penalties of perjury by an authorized officer of the corporation, to recognize gain (in the case of the distributing corporation) and to be secondarily liable (in the case of the controlled corporation) in accordance with the provisions of this paragraph (c)(3) upon the occurrence of a disposition, directly or indirectly, by the foreign transferee distributee of any stock or securities of the distributing or controlled corporation (or a successor-in-interest) (other than a disposition that itself satisfies the requirements of this paragraph (c)(3)(vi)).

(*3*) An agreement of each foreign transferee distributee, signed under penalties of perjury by the individual or an authorized officer of the corporation, to comply with all of the responsibilities, qualifications and duties of a qualified foreign distributee under this paragraph (c)(3), with respect to the stock or securities of the distributing or controlled corporation (or a successor-in-interest) owned, directly or indirectly, by the transferee distributee.

(G) Gain shall not be recognized under paragraph (c)(3)(vii) of this section in the case of a section 355 distribution by a qualified foreign distributee of stock or securities of the distributing or controlled corporation (or a successor-in-interest), or of another qualified foreign distributee. The qualified foreign distributee that distributed the stock or securities is no longer required to comply with the rules of this section applicable to qualified foreign distributees, provided such person no longer has any interest, directly or indirectly, in the distributing and controlled corporation. Thus, for example, such person is not counted as a qualified foreign distributee for purposes of limiting gain recognition to 10 or fewer foreign distributees. In order for this provision to apply, the substitute distributee must either be a qualified U.S. person or satisfy the requirements applicable to qualified foreign distributees contained in this paragraph (c)(3) and must include with the first annual certification thereafter filed under paragraph (c)(3)(v) of this section the following information and agreements:

(*1*) A description of the transaction (including a statement of applicable Internal Revenue Code sections, and a description of the stock or securities distributed in the transaction).

(*2*) An agreement of the distributing corporation and the controlled corporation (amending the agreement described in paragraph (c)(3)(iii) of this section), signed under penalties of perjury by an authorized officer of the corporation, to recognize gain (in the case of the distributing corporation) and to be secondarily liable (in the case of the controlled corporation) in accordance with the provisions of this paragraph (c)(3) upon the occurrence of a disposition, directly or indirectly, by a foreign substitute distributee of any stock or securities received by the substitute distributee in the transaction.

(*3*) An agreement of each foreign substitute distributee, signed under penalties of perjury by the individual or authorized officer of the corporation, to succeed to all of the responsibilities, qualifications and duties of a qualified foreign distributee under this paragraph (c)(3), with respect to the stock or securities of the distributing or controlled corporation (or a successor-in-interest) received by such substitute distributee.

(vii) *Recognition of gain*. (A)(*1*) The distributing corporation must file, within 90 days of a transaction described in this paragraph (c)(3)(vii)(A), an amended return for the year of the distribution and recognize gain realized but not recognized upon such distribution, if, prior to the close of the 120-month period following the end of the taxable year of the distributing corporation in which the distribution was made, either—

(*i*) A qualified foreign distributee sells (or otherwise disposes of) the stock or securities of the distributing or controlled corporation that the qualified foreign distributee owned (directly or indirectly) (other than pursuant to a transfer described in paragraph (c)(3)(vi) of this section); or

(*ii*) Any other transaction (e.g., a public offering or reorganization) results in a substantial transformation (as defined in paragraph (c)(3)(vii)(B) of this section) in either the distributing or controlled corporation (or both).

(*2*) For purposes of this paragraph (c)(3)(vii)(A), a disposition includes, but is not limited to, any disposition treated as a sale or exchange under this subtitle (e.g., section 301(c)(3)(A), 302(a), 351(b) or 356(a)(1)). For the computation of gain in the case of a sale (or similar disposition), see paragraph (c)(3)(vii)(C) of this section. For the computation of gain in the case of other transactions, see paragraphs (c)(3)(vii)(D) and (F) of this section. For special rules regarding substitute distributees, see paragraph (c)(3)(vii)(E) of this section.

(B) A transaction is treated as a substantial transformation if, as a result of such transaction, the qualified foreign distributees, transferee distributees and substitute distributees own, in the aggregate, less than 50 percent of either the total voting power or the total value of the stock of the distributing or the controlled corporation, directly or indirectly, that the qualified foreign distributees owned immediately after the distribution.

(C) In the case of a sale (or similar disposition), directly or indirectly, by a qualified foreign distributee of the stock or securities of the distributing or controlled corporation (or a successor-in-interest) that does not result in a substantial transformation, the distributing corporation shall be required to recognize a proportionate amount of the gain realized but not recognized under this paragraph (c)(3), equal to the percentage of stock of the distributing or controlled corporation, as the case may be, sold (or otherwise disposed of), directly or indirectly, by the qualified foreign distributee. However, if the sale (or other disposition) of stock or securities by a qualified foreign distributee results in a substantial transformation, the distributing corporation (or its successor-in-interest) must recognize the entire deferred gain that has not already been recognized under paragraph (c)(3)(vii) of this section.

(D) In the case of a nonrecognition transaction that results in a substantial transformation, the distributing corporation must recognize the entire deferred gain that has not already been recognized under paragraph (c)(3)(vii) of this section. If a nonrecognition transaction does not result in a substantial transformation, the distributing corporation does not recognize any gain provided that the requirements of

paragraph (c)(3)(vi) of this section are satisfied.

(E) A sale (or other disposition), directly or indirectly, by a substitute distributee, of all or a portion of the stock or securities of the distributing or controlled corporation (or a successor-in-interest) that the substitute distributee received in the section 355 distribution shall be treated as a disposition of such stock or securities by a qualified foreign distributee (in accordance with paragraph (c)(3)(vii)(C) of this section) for purposes of computing gain under this paragraph (c)(3)(vii).

(F) Other transactions or events shall trigger gain under this paragraph (c)(3)(vii) as follows:

(*1*) If a qualified foreign distributee ceases to satisfy the requirements for a qualified foreign distributee contained in paragraph (c)(3)(i)(C) of this section (or any other specified requirements in paragraph (c)(3) of this section), the qualified foreign distributee shall be treated as if it sold all of the stock and securities that it owned, directly or indirectly, in the distributing and controlled corporation (or a successor-in-interest), on the date that such person ceased to meet the requirements.

(*2*) If a substitute distributee ceases to satisfy the requirements for a qualified foreign distributee contained in paragraph (c)(3)(i)(C) of this section (or any other specified requirements in paragraph (c)(3) of this section), the substitute distributee shall be treated as if it sold all of the stock and securities of the distributing or controlled corporation (or a successor-in-interest) that it received in the distribution, on the date that it ceased to meet the requirements.

(*3*) If the distributing corporation (or a successor-in-interest) fails to satisfy the requirement contained in paragraph (c)(3)(ii)(B) of this section on any testing date during which the agreement to recognize gain is in effect, such failure will be treated as if a substantial transformation has occurred on such date.

(*4*) If either the distributing or controlled corporation (or a successor-in-interest) is acquired in a section 381(a) exchange and the acquirer is not a successor-in-interest that satisfies the requirements of paragraph (c)(3)(vi)(E), such acquisition will be treated as if a substantial transformation has occurred on the date of the acquisition.

(G) A qualified foreign distributee that sells (or otherwise disposes of) all of its interest, directly or indirectly, in the distributing and controlled corporation ceases thereafter to be a qualified foreign distributee. In addition, where one qualified foreign distributee owns all of the stock of another qualified foreign distributee, and both persons have identical direct or indirect interests in the distributing or controlled corporation, the direct or indirect sale (or other disposition) by one qualified foreign distributee of all of its interest in the distributing or controlled corporation (under paragraph (c)(3)(vii) of this section) will terminate the qualified foreign distributee status for the second qualified foreign distributee. The principles of this paragraph (c)(3)(vii) shall generally be applied so that any gain relating to the same stock of the distributing or controlled corporation by more than one person is not taxed more than once under this paragraph (c)(3)(vii). In any event, gain recognized pursuant to this paragraph (c)(3)(vii), on a cumulative basis, shall not exceed the amount of gain that the distributing corporation would have recognized under section 367(e)(1) if its initial distribution of the stock or securities of the controlled corporation was fully taxable under paragraph (b) of this section.

(H) If additional tax is required to be paid by the distributing corporation (or a successor-in-interest) for the year of the distribution, interest must be paid by the distributing corporation (or the controlled corporation if the distributing corporation fails to pay the tax due) on that amount at the rates determined under section 6621(a)(2) with respect to the period between the date that was prescribed for filing the distributing corporation's original income tax return for the year of the distribution and the date on which the additional tax for that year is paid.

(I) Net operating losses, capital losses, or credits against tax that were available in the year of the distribution and that are unused (whether or

not they have expired since the distribution) at the time of gain recognition described in this paragraph (c)(3)(vii) may be applied (respectively) by the distributing corporation against any gain recognized or tax owed by reason of this provision, but no other adjustments shall be made with respect to any other items of income or deduction in the year of distribution or other years.

(viii) *Failure to comply.* (A) Except as otherwise provided in paragraph (c)(3)(viii)(B) of this section, if the distributing corporation or the controlled corporation fails to comply in any material respect with the requirements of this paragraph (c)(3) or with the terms of an agreement submitted pursuant hereto, or if the distributing corporation knows or has reason to know of any failure of another person to so comply, the distributing corporation shall treat the initial distribution of the stock or securities of the controlled corporation as a taxable exchange in the year of the distribution. In such event, the period for assessment of tax shall be extended until three years after the date on which the Internal Revenue Service receives actual notice of such failure to comply.

(B) If a person fails to comply in any material respect with the requirements of this paragraph or with the terms of an agreement submitted pursuant thereto, the provisions of paragraph (c)(3)(viii)(A) of this section shall not apply if the person is able to show that such failure was due to reasonable cause and not willful neglect, provided that the person achieves compliance as soon as the person becomes aware of the failure. Whether a failure to materially comply was due to reasonable cause shall be determined by the district director under all the facts and circumstances.

(d) *Other consequences*—(1) *Exchange under section 897(e)(1).* With respect to the treatment under section 897(e)(1) of a foreign distributee on the receipt of stock or securities of a domestic or foreign corporation where the foreign distributee's interest in the distributing domestic corporation is a United States real property interest, see section 897(e)(1) and the regulations thereunder.

(2) *Dividend treatment under section 1248.* With respect to the treatment as a dividend of a portion of the gain recognized by the domestic corporation on the distribution of the stock of certain foreign corporations, see sections 1248(a) and (f) and the regulations thereunder.

(3) *Distribution of stock of a passive foreign investment company.* [Reserved]

(4) *Reporting under section 6038B.* Notice shall be required under section 6038B with respect to a distribution described in this section. See § 1.6038B–1T(e).

(e) *Examples.* The rules of paragraphs (b), (c), and (d) of this section are illustrated by the examples below. In all examples, assume that all foreign companies are treated as corporations for Federal income tax purposes and are not treated as fiscally transparent under the taxation laws of the relevant foreign country.

Example 1. (i) FC, a Country Z company, owns all of the outstanding stock of DC1, a domestic corporation. DC1 owns all of the outstanding stock of DC2, another domestic corporation. The fair market value of the DC1 stock is 300x, and FC has a 100x basis in the DC1 stock. The fair market value of the DC2 stock is 180x, and DC1 has a 80x basis in the DC2 stock. Neither DC1 nor DC2 is a U.S. real property holding corporation. Country Z does not maintain an income tax treaty with the United States.

(ii) In a transaction qualifying for nonrecognition under section 355, DC1 distributes all of the stock of DC2 to FC. After the distribution, the DC1 stock has a fair market value of 120x.

(iii) Under paragraphs (b)(1) and (2) of this section, DC1 recognizes gain of 100x, which is the difference between the fair market value (180x) and the adjusted basis (80x) of the stock distributed. Under paragraph (d)(1) of this section and section 358, FC takes a basis of 40x in the DC1 stock, and a basis of 60x in the DC2 stock.

Example 2. (i) C, a citizen and resident of Country F, owns all of the stock of DC1, a domestic corporation. DC1, in turn, owns all of the stock of DC2, also a domestic corporation. The fair market value of the DC1 stock is 500x, and C has a 100x basis in the DC1 stock. The DC2 stock has a fair market value of 200x, and DC1 has a 180x basis in the DC2 stock.

(ii) In a transaction qualifying for nonrecognition under section 355, DC1 distributes to C all of the stock of DC2. DC1 and DC2 are U.S. real property holding corporations immediately after the distribution.

After the distribution, the DC1 stock has a fair market value of 300x.

(iii) Under paragraph (c)(1) of this section, provided that DC1 complies with the reporting requirements contained in paragraph (c)(1)(ii) of this section, DC1 does not recognize gain on the distribution of the DC2 stock because DC1 and DC2 are U.S. real property holding corporations immediately after the distribution.

(iv) Under section 897(e) and the regulations thereunder, C is considered to have exchanged DC1 stock with a fair market value of 200x and an adjusted basis of 40x for DC2 stock with a fair market value of 200x. Because DC2 is a U.S. real property holding corporation, and its stock is a U.S. real property interest, C does not recognize any gain under section 897(e) on the distribution. C takes a basis of 40x in the DC2 stock, and its basis in the DC1 stock is reduced to 60x pursuant to section 358.

Example 3. (i) All of the outstanding common stock of DC, a domestic corporation that is not a U.S. real property holding corporation, is regularly traded on an established securities market located in the United States. None of the foreign shareholders of DC (directly, indirectly, or constructively) owns more than five percent of the common stock of DC. DC owns all of the stock of DS, a domestic corporation. The stock of DS has appreciated in the hands of DC.

(ii) In a transaction qualifying for nonrecognition under section 355, DC distributes all of the stock of DS to the common shareholders of DC.

(iii) Under paragraph (c)(2) of this section, DC does not recognize gain on the distribution of the DS stock to any foreign distributee, provided that DC complies with the reporting requirements contained in paragraph (c)(2)(iii) of this section. Each shareholder's basis in the DC and DS stock is determined pursuant to section 358.

Example 4. (i) FC, a company resident in Country X, owns all of the stock of DC1, a domestic corporation. DC1, in turn, owns all of the stock of DC2, a domestic corporation. The fair market value of the DC1 stock is 1,000x, and FC has a basis in the DC1 stock of 800x. The DC2 stock has a fair market value of 500x at the time of the distribution, and DC1 has a 100x basis in the DC2 stock. Neither DC1 nor DC2 is a U.S. real property holding corporation. Country X maintains an income tax treaty with the United States that includes an information exchange provision.

(ii) In a transaction qualifying for nonrecognition under section 355, DC1 distributes to FC all of the stock of DC2. Immediately after the distribution, the DC1 stock has a fair market value of 500x. Thus, the value of DC1 exceeds 400x, the amount of the deferred gain on the distribution.

(iii) Under paragraph (c)(3) of this section, DC1 will not recognize gain on the distribution of the DC2 stock to (foreign distributee) FC if FC is a qualified foreign distributee (as described in paragraph (c)(3)(i)(C) of this section) and DC1 enters into a gain recognition agreement (in which DC2 agrees to be secondarily liable), as described in paragraph (c)(3)(iii) of this section, and DC1, DC2 and FC otherwise comply with all of the provisions of paragraph (c)(3) of this section. Pursuant to section 358, FC will take a 400x basis in the DC2 stock and FC's basis in the DC1 stock will be reduced to 400x.

Example 5. (i) Assume the same facts as in *Example 4.* In addition, two years after DC1's distribution of DC2 stock to FC, FC sells 25 percent of the DC2 stock to Y, an unrelated corporation. One year later, FC sells an additional 30 percent of its DC2 stock to Z, another unrelated corporation.

(ii) Under paragraph (c)(3)(vii) of this section, upon FC's sale of 25 percent of its DC2 stock, DC1 is required to file an amended return for the year in which the DC2 stock was distributed to FC, and recognize 100x of gain, which represents 25 percent of the gain realized but not recognized on the distribution.

(iii) Upon FC's second sale of 30 percent of its DC1 stock, DC1 is required to file another amended return for the year of the distribution and recognize the balance of the deferred gain, or 300x, because such sale results in a substantial transformation (within the meaning of paragraph (c)(3)(vii)(B) of this section).

Example 6. (i) Assume the same facts as in *Example 5,* except that FC did not sell an additional 30 percent of its DC2 stock. Instead, DC2 issued additional stock in a public offering that reduced FC's interest in DC2 to less than 50 percent.

(ii) The public offering caused a substantial transformation because, as a result of the public offering, the interest of FC in DC2 was reduced to less than 50 percent of the amount of stock that FC owned in DC2 immediately after the distribution. Thus, the result is the same as in *Example 5.*

Example 7. (i) Assume the same facts as in *Example 4* In addition, one year after DC1's distribution of DC2 stock to FC, FC transfers all of the DC2 stock to FS, a company resident in Country X, in exchange for all of the FS stock, in a transaction described in section 351.

(ii) FS is described as a transferee distributee under paragraph (c)(3)(vi)(C) of this section. The transfer by FC of DC2 stock to FS is a nonrecognition transaction under paragraph (c)(3)(vi) of this section provided all of the requirements in paragraph (c)(3)(vi)(F) of this section are satisfied. (FS is counted, together with FC, for purposes of limiting nonrecognition treatment to up to ten qualified foreign distributees during the time that the gain recognition agreement is in effect.) DC1

will not recognize gain under the gain recognition agreement upon FC's transfer of the stock of DC2 to FS if DC1 enters into a new agreement, agreeing to recognize gain if FS sells DC2 stock, and the provisions of paragraph (c)(3)(vi) of this section are satisfied. A sale by FC of FS stock would be treated as a recognition event under paragraph (c)(3)(vii) because such sale would constitute an indirect disposition by FC of the DC2 stock.

Example 8. (i) P1, an entity treated as a partnership for Federal income tax purposes, owns all of the outstanding stock of DC1, a domestic corporation. DC1 owns all of the outstanding stock of DC2, another domestic corporation. The fair market value of the DC1 stock is 900x and P1 has an 900x basis in the DC1 stock. The fair market value of the DC2 stock is 600x and DC1 has a 400x basis in the DC2 stock. Neither DC1 nor DC2 is a U.S. real property holding corporation.

(ii) FC, a company resident in country X, and USP, a U.S. corporation, are the sole partners of P1. Under the rules and principles of sections 701 through 761, FC is entitled to a 60 percent, and USP is entitled to a 40 percent, distributive share of each item of P1 income and loss. Country X maintains an income tax treaty with the United States that includes an information exchange provision.

(iii) In a distribution qualifying for nonrecognition under section 355, DC1 distributes all of the stock of DC2 to P1. Paragraph (b)(5)(i) of this section provides that stock owned by a partnership is considered to be owned proportionately by its partners. Under paragraph (b)(5)(ii) of this section, if USP certifies to DC1 that it is a qualified U.S. person (and DC1 does not know or have reason to know that the certification is false), no Federal income tax shall be imposed with respect to the distribution by DC1 of DC2 to P1, to the extent of USP's 40 percent interest in P1.

(iv) Paragraph (c)(3)(i)(D) of this section provides that no foreign distributee may be treated as a qualified foreign distributee with respect to stock of the distributing corporation owned through a partnership, unless the distributing corporation receives a ruling from the Internal Revenue Service to the contrary. Thus, DC1 may not avoid recognition of the remaining 60 percent of the realized gain (relating to the interest of P1 owned by FC) by entering into a gain recognition agreement pursuant to paragraph (c)(3) of this section, unless DC1 obtains a ruling to the contrary.

Example 9. (i) DC1, a domestic corporation, owns all of the stock of DC2, also a domestic corporation. The stock of DC1 is owned equally by three shareholders: A, a domestic corporation, B, a U.S. citizen, and FB, a Country Y company.

(ii) A short time before DC1 adopted a plan to distribute the stock of DC2 to its shareholders, but after the board of directors of DC1 began contemplating the distribution, FB formed Newco, a domestic corporation, and contributed its DC1 stock to Newco in a transaction qualifying for nonrecognition under section 351. A valid business purpose existed for FB's transfer of the DC1 stock to Newco, but this purpose would have been fulfilled irrespective of whether FB transferred the DC1 stock to Newco before the distribution of DC2, or after the distribution of DC2 (in which case FB would have transferred the stock of DC1 and DC2 to Newco).

(iii) Pursuant to paragraph (b)(6) of this section, the District Director may determine that FB formed Newco for a principal purpose of avoiding section 367(e)(1). In such case, for Federal income tax purposes, FB will be treated as having received the stock of DC2 in a section 355 distribution, and then as having transferred the stock to Newco in a section 351 transaction.

(iv) If B was not a shareholder of DC1 so that A and FB were equal (50 percent) shareholders, FB would be treated as a foreign distributee within the meaning of paragraph (c)(3)(i)(B) of this section without the application of paragraph (b)(6) of this section. In such case, DC1 would recognize 50 percent of the gain realized on the distribution of the DC2 stock, unless FB was a qualified foreign distributee within the meaning of paragraph (c)(3)(i) of this section and the conditions under paragraph (c)(3)(ii) of this section were satisfied.

Example 10. (i) DC1, a domestic corporation, owns all of the stock of DC2, also a domestic corporation. The stock of DC1 is owned by FP, a company resident in Country X. Country X maintains in income tax treaty with the United States that includes an information exchange provision. The DC2 stock has a fair market value of 500x at the time of the distribution, and DC1 has a basis of 100x in the DC2 stock. The stock of DC1 has a value of 500x (excluding DC1's investment in DC2). Neither DC1 nor DC2 is a U.S. real property holding corporation.

(ii) FP forms a holding company resident in Country X, Newco, and transfers 50 percent of its DC1 stock to Newco in an exchange described in section 351. Immediately after those transactions, DC1 distributes all of its DC2 stock to FP in exchange for FP's stock of DC1 in a transaction described in section 355. Thus, after the non pro rata distribution, FP owns all of the stock of DC2, and FP also owns all of the stock of Newco, which, in turn, owns all of the stock of DC1.

(iii) Newco and FP are foreign distributees (under paragraph (c)(3)(i)(B)(*1*) of this section) because they owned stock of DC1 immediately prior to the distribution. Assuming

that all of the requirements of the gain recognition agreement exception under paragraph (c)(3) of this section are satisfied (so that both FP and Newco are qualified foreign distributees under paragraph (c)(3)(i)(C) of this section), DC1 will not be immediately taxable on the 400x gain realized on the distribution of the stock of DC2. Gain will be triggered under the gain recognition agreement under paragraph (c)(3)(vii) of this section if FP sells stock of Newco (because such sale would be an indirect disposition by FP of the stock of DC1), if Newco sells stock of DC1, or if FP sells stock of DC2.

Example 11. (i) Assume the same facts as in *Example 10*, except that Newco is a company resident of Country Z, and Country Z does not maintain an income tax treaty with the United States that includes an information exchange provision.

(ii) DC1 may still enter into a gain recognition agreement under paragraph (c)(3) of this section. Both FP and Newco are foreign distributees, but Newco is not a qualified foreign distributee. Thus, DC1 must recognize 50 percent, or 200x, of the 400x deferred gain on the distribution of DC2 stock. Such (50 percent) portion equals the percentage of the DC1 stock owned by foreign distributees that are not qualified foreign distributees (the 50 percent of the stock owned by Newco). DC1 may defer 50 percent of the gain, with respect to the portion of its stock owned by FP, a qualified foreign distributee, provided that it meets the requirements of paragraph (c)(3) of this section.

Example 12. (i) FC, a company resident in Country X, owns all of the stock of DC1, a domestic corporation (and has owned DC1 for many years). Country X maintains an income tax treaty with the United States that includes an information exchange provision. DC1, in turn, owns all of the stock of DC2, a domestic corporation. DC1 has a basis of 200x in the DC2 stock, and the DC2 stock has a value of 500x. Immediately after the distribution of DC2 described below, DC1 has a value of more than 300x.

(ii) DC1 distributes all of the stock of DC2 to FC (a qualified foreign distributee) in a transaction described under section 355, and satisfies all of the requirements of paragraph (c)(3) of this section to qualify for an exception to the general rule of taxation under section 367(e)(1). Two years after the initial distribution, FC distributes all of the stock of DC2 to its sole shareholder, FP, a resident of Country X, in a transaction described under section 355.

(iii) Under paragraph (c)(3)(vi)(D) of this section, FP is a substitute distributee with respect to the DC2 stock. Provided that the requirements of paragraph (c)(3)(vi)(G) of this section are satisfied, FP replaces FC as a qualified foreign distributee with respect to the DC2 stock (although FC is still a qualified foreign distributee with respect to the DC1 stock). FC is no longer required to maintain an interest in DC2 for purposes of determining whether a substantial transformation occurs. Thus, a sale by FP of the stock of FC would not trigger gain under paragraph (c)(3)(vii) of this section.

Example 13. (i) DC1, a domestic corporation, owns all of the stock of DC2, also a domestic corporation. The stock of DC1 is owned by two shareholders: FP and FX. FP, a company resident in Country Z, owns 25 percent of the stock of DC1. FX, a company resident in Country X, owns 75 percent of the stock of DC1. Country X maintains an income tax treaty with the United States that includes an information exchange provision; Country Z does not. The fair market value of DC2 is 500x and DC1 has a basis of 100x in the DC2 stock. Immediately after the distribution described below, DC1 has a value in excess of 400x.

(ii) FP formed FS, a company resident in Country X, and transferred its 25 percent interest in DC1 to FS in exchange for all of the stock of FS in an exchange described in section 351. Within two years of the exchange, DC1 distributed all of the stock of DC2 to its shareholders.

(iii) Under paragraph (c)(3) of this section, DC1 may defer a portion of its gain realized on the distribution of DC2. DC1 must immediately recognize 25 percent of the realized gain, or 100x, because FP, a 25 percent (indirect) shareholder is a foreign distributee (within the meaning of paragraph (c)(3)(i)(B) of this section), but may not be treated as a qualified foreign distributee (within the meaning of paragraph (c)(3)(i)(C) of this section). DC1 may defer 75 percent of its realized gain if FX is a qualified foreign distributee and DC1 enters into a gain recognition agreement (in which DC2 agrees to be secondarily liable), and the provisions of paragraph (c)(3) of this section are otherwise met. DC1 need not include FS as a qualified foreign distributee because FP and FS had identical 25 percent ownership interests in DC1, and DC1 is taxable with respect to such 25 percent interest. Thus, under paragraph (c)(3)(vii)(G) of this section, a sale by FS of its DC1 or DC2 stock will not result in an additional trigger of the gain recognition agreement under paragraph (c)(3)(vii) of this section.

(iv) If FP was instead a resident of Country X, DC1 could defer its entire realized gain if both FP and FS were qualified foreign distributees. In such case, DC1 would have three qualified foreign distributees. (DC1 is limited to ten qualified foreign distributees, including transferee and substitute distributees during the term of the gain recognition agreement.) If FS sold its entire interest in either DC1 or DC2, DC1 would be required to amend its Federal income tax return for the year of the transfer and include 100x in income. In such case, neither FP nor

FS would be considered a qualified foreign distributee immediately after the sale (and, as a result, FP's sale of its FS stock would not trigger additional gain under paragraph (c)(3)(vii)(G) of this section). The result would be the same if FP sold all of the stock of FS (as such sale is an indirect disposition by FP of all its stock of DC1 and DC2). (In such case, the sale by FS of its stock of DC1 or DC2 would not trigger additional gain under paragraph (c)(3)(vii)(G) of this section.)

(f) *Effective date.* This section shall be effective with respect to distributions occurring on or after September 13, 1996. However, taxpayers may elect to apply the rules of this section with respect to distributions occurring on or after December 31, 1995.

[T.D. 8682, 61 FR 42169, Aug. 14, 1996]

§ 1.367(e)–2T Distributions described in section 367(e)(2) (temporary).

(a) *Purpose and scope*—(1) *In general.* This section provides rules concerning the recognition of gain by a corporation on its distribution to a foreign corporation of property in a complete liquidation to which section 332 applies. Paragraph (b)(1) of this section states as a general rule that gain recognition is required when a domestic corporation makes a distribution of property in complete liquidation under section 332 to a foreign corporation that meets the stock ownership requirements of section 332(b) with respect to stock in the domestic corporation. Paragraph (b)(2) of this section provides the only exceptions to the gain recognition rule of paragraph (b)(1). Paragraph (b)(3) of this section refers to other consequences of distributions described in paragraphs (b)(1) and (2). Paragraph (c)(1) of this section states as a general rule that gain recognition is not required when a foreign corporation makes a distribution of property in complete liquidation under section 332 to another foreign corporation that meets the stock ownership requirements of section 332(b) with respect to stock in the distributing foreign corporation. Paragraph (c)(2) of this section provides exceptions to the nonrecognition rule of paragraph (c)(1). Paragraph (c)(3) of this section refers to other consequences of distributions described in paragraphs (c)(1) and (2). Examples of the rules of this section are provided in paragraphs (b)(4) and (c)(4) of this section. Finally, paragraph (d) specifies the effective date for the rules of this section. The rules of this section are issued pursuant to the authority conferred by section 367 (e)(2).

(2) *Nonapplicability of section 367(a).* Section 367(a) shall not apply to a complete liquidation described in section 332 by a domestic corporation into a foreign corporation that meets the stock ownership requirements of section 332(b) and that is subject to section 367(e)(2) or is described in paragraph (b)(2)(iii) of this section.

(b) *Distribution by a domestic corporation*—(1) *Recognition of gain required*—(i) *General rule.* If a domestic corporation makes a distribution of property in a complete liquidation under section 332 to a foreign corporation that meets the stock ownership requirements of section 332(b) with respect to stock in the domestic corporation, then, except as provided in paragraph (b)(2) of this section, section 337 (a) and (b)(1) shall not apply and the distributing domestic corporation shall recognize gain on the distribution of the item of property under section 367(e)(2). The gain recognized by the domestic corporation shall be equal to the excess of the fair market value of each such item of property distributed over its adjusted basis. Except as provided in paragraphs (b)(2)(iii) and (d) of this section, the recognition of gain required under this paragraph is not prohibited by any treaty to which the United States is a party.

(ii) *Recognition of losses.* If paragraph (b)(1)(i) of this section would apply to a distribution of an item of property but for the fact that the distributing domestic corporation realizes a loss on the distribution of such item of property, then the distributing domestic corporation shall recognize the loss realized on such distribution. However, such loss shall be recognized only to the extent that (A) the total amount of capital losses recognized on such distributions does not exceed the total amount of capital gains recognized by the distributing domestic corporation pursuant to paragraph (b)(1)(i), and (B) the total amount of ordinary losses recognized on such distributions does

not exceed the total amount of ordinary income recognized by the distributing domestic corporation pursuant to paragraph (b)(1)(i). Notwithstanding any other provision of this paragraph, losses shall be recognized under this section only on property that the distributing domestic corporation did not acquire within the five year period ending on the date of the liquidation through a capital contribution, a liquidation under section 332, or an exchange under section 351(a) or 361(a). If, pursuant to the rules of this paragraph (b)(1)(ii), only a portion of the capital loss or ordinary loss on the property distributed is recognized because the aggregate capital loss exceeds the aggregate capital gain or the aggregate ordinary loss exceeds the aggregate ordinary gain of the distributing corporation, then the capital loss (and the ordinary loss) recognized shall be treated as being recognized on a pro rata basis with respect to each such capital or ordinary property distributed.

(iii) *Distribution of partnership interest*—(A) *In general.* If a domestic corporation distributes an interest as a partner in a partnership (whether foreign or domestic) in a distribution described in paragraph (b)(1)(i) of this section, then for purposes of applying this section the domestic corporation shall be treated as having distributed a proportionate share of the property of the partnership. Accordingly, the applicability of the nonrecognition rules of paragraph (b)(1)(i) and (ii) and of any exception to recognition provided in this section shall be determined with reference to the property of the partnership rather than to the partnership interest itself. Where the property of the partnership includes an interest in a lower-tier partnership the applicability of any exception with respect to the interest in the lower-tier partnership shall be determined with reference to the property of the lower-tier partnership. In the case of multiple tiers of partnerships, the applicability of an exception shall be determined with reference to the property of the lowest-tier partnership in the partnership chain. A domestic corporation's proportionate share of partnership property shall be determined under the rules and principles of sections 701 through 761 and the regulations thereunder.

(B) *Basis adjustments.* The foreign corporation's basis in the distributed partnership interest shall be equal to the distributing domestic corporation's basis in such partnership interest immediately prior to the distribution, increased by the amount of gain and reduced by the amount of loss recognized by the domestic corporation on the distribution of the partnership interest. Solely for purposes of sections 743 and 754, the foreign corporation shall be treated as having purchased the partnership interest for an amount equal to the foreign corporation's adjusted basis therein.

(C) *Limited partnership interest.* The distribution by a domestic corporation of a limited partnership interest that is regularly traded on an established securities market shall not be subject to the rules of this paragraph (b)(1)(iii). Instead, the distribution of such an interest shall be treated in the same manner as a distribution of stock. For purposes of this section, a limited partnership interest is an interest as a limited partner in a partnership that is organized under the laws of any state of the United States or the District of Columbia. Whether such an interest is regularly traded on an established securities market shall be determined under the provisions of § 1.367(a)–1T(c)(3)(ii)(D).

(2) *Recognition of gain or loss not required*—(i) *Distribution of property used in a United States trade or business*—(A) *Conditions for nonrecognition.* The domestic corporation shall not recognize gain or loss under paragraph (b)(1) of this section on its distribution of property (including inventory) used by the domestic corporation in the conduct of a trade or business within the United States if—

(*1*) The distributee foreign corporation is not a controlled foreign corporation, as defined in section 957(a) or section 953(c) (including a corporation that would be treated as a controlled foreign corporation under section 953(c) but for the provisions of section 953(c)(3)), at the time of the distribution of property;

(*2*) The distributee foreign corporation, for the ten-year period beginning

on the date of the distribution of such property, uses the property in the conduct of a trade or business in the United States (or, in the case of inventory, continues to hold the property for sale to customers until disposed of); and

(*3*) The domestic and foreign corporations attach the statement described in paragraph (b)(2)(i)(B) to their U.S. income tax returns for the year of the distribution (or to an amended return filed no later than July 16, 1990).

This nonrecognition rule does not apply to the distribution of intangibles described in section 936(h)(3)(B). Property is considered used by a foreign corporation in the conduct of a trade or business in the United States only if any income from the use of the property and any income or gain from the sale or exchange of the property would be subject to taxation under section 882(a) as effectively connected income. For purposes of this paragraph (b)(2)(i)(A), stock held by a dealer as inventory or for sale in the ordinary course of its trade or business shall be treated as inventory and not as stock in the hands of both the domestic corporation and the distributee foreign corporation. lf a distributing domestic corporation that would otherwise qualify for nonrecognition on the distribution of such property under this paragraph (b)(2)(i) fails to file the statement properly or files a statement that does not comply with the requirements of paragraph (b)(2)(i)(B) of this section, the Commissioner may, nevertheless, in his discretion treat the distributing domestic corporation as if it had, in fact, met all the requirements of paragraph (b)(2)(i)(B) if such treatment is necessary to prevent the taxpayer from otherwise deriving a tax benefit by such failure.

(B) *Required statement.* The statement required by paragraph (b)(2)(i)(A) shall be prepared by the distributing domestic corporation and signed under penalties of perjury by an authorized officer of each of the distributing domestic and distributee foreign corporations. The statement shall set forth the following items:

(*1*) A declaration that the distribution to the foreign corporation is one to which the rules of § 1.367(e)–2T(b)(2)(i) apply.

(*2*) A description of all of the property distributed by the domestic corporation (whether or not the property qualifies for nonrecognition). Such description shall identify the property that continues to be used by the distributee foreign corporation in the conduct of a trade or business within the United States, including the location, adjusted basis, estimated fair market value, a summary of the method (including appraisals if any) used for determining such value, and the date of distribution of such items of property.

(*3*) An identification of the distributee foreign corporation, including its name and address, taxpayer identification number (if any), residence and place of incorporation.

(*4*) With respect to property entitled to nonrecognition pursuant to paragraph (b)(2)(i), a declaration by the distributee foreign corporation that it irrevocably waives any right under any treaty (whether or not currently in force at the time of the liquidation) to sell or exchange any item of such property without U.S. income taxation or at a reduced rate of taxation, or to derive income from the use of any item of such property without U.S. income taxation or at a reduced rate of taxation.

(*5*) An agreement by the distributing domestic corporation and the distributee foreign corporation to extend the statute of limitations on assessments and collections (under section 6501) with respect to the distribution of each item of property until three years after the date on which all such items of property have ceased to be used in a trade or business within the United States pursuant to paragraph (b)(2)(i)(C)(*1*), but in no event shall the extension be for a period longer than 13 years from the filing of the original U.S. income tax return for the taxable year of the last distribution of any such item of property. If, however, the distributing domestic corporation files an amended return pursuant to the provisions of paragraph (b)(2)(i)(C), other than an amended return filed for the substitution of property exchanged under section 1031 or converted under section 1033, the agreement to extend

the statute of limitations on assessments and collections as to the property with respect to which gain is included on the amended return will not extend beyond three years (except as otherwise provided by section 6501) after the filing of the amended tax return.

(C) *Effect of submitting statement.* By the distributing domestic corporation's claiming nonrecognition under this paragraph (b)(2)(i), the distributing domestic corporation and the distributee foreign corporation agree to be subject to the rules of this paragraph (b)(2)(i)(C).

(*1*) If, within the ten year period from the date of distribution, any item of property entitled to nonrecognition under paragraph (b)(2)(i)(A) ceases to be used by the distributee foreign corporation in the conduct of a trade or business in the United States for any reason (including but not limited to the sale or exchange of such property or the removal of the property from conduct of the trade or business), then, except as provided in paragraph (b)(2)(i)(C)(*3*), the distributee foreign corporation shall cause to be filed on behalf of the domestic corporation an amended U.S. income tax return for the year of the distribution of such item of property, in which return the domestic corporation recognizes the gain (but not loss) realized but not recognized upon the initial distribution of such item of property. On the amended return filed pursuant to paragraph (b)(2)(i)(C)(*1*), the distributing domestic corporation may use any losses (or credits) existing in the year of the distribution, that were otherwise available in that year and not used in another year, to offset the gain (or tax thereon) required to be recognized under such paragraph.

(*2*) The amended return required by paragraph (b)(2)(i)(C)(*1*) shall be filed no later than the due date (including extensions) for the return of the distributee foreign corporation for the taxable year in which the property ceases to be used by the distributee foreign corporation in the conduct of a trade or business in the United States.

(*3*) If property ceases to be used by the distributee foreign corporation in the conduct of a trade or business in the United States by reason of a disposition of such property, and either (*i*) a loss is recognized in whole on such disposition, or (*ii*) a gain is recognized in whole and the distributee foreign corporation reports the full amount of such gain on its timely filed U.S. tax return for the year of the disposition, then the distributing domestic corporation shall not be required to recognize any gain in respect of the distribution of such property on an amended return for the year of the distribution. If a gain is recognized in whole on the disposition of the property and the distributee foreign corporation does not report the full amount of such gain on a timely filed U.S. tax return for the year of the disposition, then the distributing domestic corporation shall be required to recognize and include in income on an amended return for the year of the distribution the full amount of gain realized by such domestic corporation on the distribution of such property. If the domestic corporation is required to recognize gain in the year of the distribution, the foreign corporation shall, nonetheless, be required to recognize any gain realized on the disposition of the property according to generally applicable principles, but the basis of the property in the hands of the foreign corporation shall be adjusted to reflect the recognition of gain by the domestic corporation. Thus, if the property ceases to be used in the active conduct of a trade or business in the United States in a transaction in which gain is recognized, and the distributee foreign corporation includes in income the full amount of such gain on a timely filed return for the taxable year in which gain is recognized, then no amended return shall be required to be filed in respect of such property by the distributing domestic corporation.

(*4*) For purposes of this paragraph (b)(2)(i)(C), property shall not be considered as no longer used in the conduct of a trade or business in the United States if exchanged for, or involuntarily converted into, similar property used in the conduct of a trade or business in the United States, to the extent such exchange or conversion qualifies for nonrecognition under section 1031

or 1033, or distributed to another foreign corporation in a liquidation distribution under section 337(a) qualifying for nonrecognition under paragraph (c)(2)(i) of this section. Further, a cessation of use of property in the conduct of a trade or business in the United States shall not include the abandonment or disposal of essentially worthless or obsolete property. If the distributee foreign corporation exchanges the property under section 1031 for, or converts the property under section 1033 into similar property used in the conduct of a trade or business in the United States, then the domestic corporation and the distributee foreign corporation must file amended returns for the year of the distribution of such property from the domestic corporation to the distributee foreign corporation, in order to substitute on the statement that was required by paragraph (b)(2)(i)(B) the property received in place of the property exchanged or converted. If the distributee foreign corporation distributes the property in a liquidation distribution under section 337(a) qualifying for nonrecognition under paragraph (c)(2)(i), then the rules of such paragraph shall apply to the distribution.

(*5*) If additional tax is required to be paid by the distributing corporation for the year of a liquidating distribution, then interest must be paid on that amount at the rates determined under section 6621 with respect to the period between the date that was prescribed for filing the distributing domestic corporation's U.S. income tax return for the year of the distribution and the date on which the additional tax for that year is paid.

(*6*) The distributee foreign corporation, as successor in interest and liability to the distributing domestic corporation, shall be jointly and severally liable for any tax owed by the distributing domestic corporation as a result of the application of paragraph (b)(2)(i), and shall succeed to the distributing domestic corporation's agreement to extend the statute of limitations and collections under section 6561.

(*7*) The distributee foreign corporation shall attach a statement to its U.S. income tax return for each year after the liquidation of the distributing domestic corporation. The statement shall identify the distributed property that ceased to be used by the distributee foreign corporation in the conduct of a trade or business within the United States during that year (without regard to whether the distributing domestic corporation was required to file an amended return as a result of such disposition pursuant to paragraph (b)(2)(i)(C)(*3*) of this section). The requirement to attach such statement to the return shall not apply to any taxable year of the distributee foreign corporation after the final taxable year in which any distributed property is used by such corporation in the conduct of a trade or business within the United States, and in no event shall the requirement apply to a taxable year later than 13 years from the filing of the original U.S. income tax return for the taxable year of the distribution.

(ii) *Distribution of U.S. real property interests.* The domestic corporation shall not recognize gain under paragraph (b)(1) of this section on the distribution of a U.S. real property interest (other than stock in a former U.S. real property holding corporation which is treated as a U.S. real property interest for five years under § 1.897–5T(c)(1)) in a complete liquidation under section 332(a) to the distributee foreign corporation that meets the stock ownership requirements of section 332(b) with respect to stock in the distributing domestic corporation. See § 1.897–5T(b)(3)(iv)(A). If property distributed by the domestic corporation is a U.S. real property interest that qualifies for nonrecognition under this paragraph (b)(2)(ii) in addition to nonrecognition provided by paragraph (b)(2)(i) of this section, then the distributing domestic corporation shall secure nonrecognition pursuant to this paragraph (b)(2)(ii) and not pursuant to the provisions of paragraph (b)(2)(i).

(iii) *Transitional rule for certain treaty provisions.* A distributing domestic corporation shall not recognize gain or loss under paragraph (b)(1) of this section on the distribution of property in a complete liquidation under section 332(a) to a foreign corporation that meets the stock ownership requirements of section 332(b) with respect to stock in the domestic corporation if—

(A) Such property was distributed by the domestic corporation and received by the foreign corporation after July 31, 1986, and before September 29, 1987 in a distribution that would have been subject to section 367(e)(2) (as enacted by the Tax Reform Act of 1986) but for the provisions of Notice 87–5, 1987–1 C.B. 416, and

(B) The foreign corporation is a resident of a foreign country which had an income tax treaty with the United States in force at the time of the distribution which contained a provision barring discrimination based on capital ownership and the corporation is not denied the benefit of nondiscrimination under that treaty.

See Notice 87–66, 1987–2 C.B. 376.

(3) *Other consequences*—(i) *Distributee basis in property*. The basis of property distributed pursuant to paragraph (b) of this section in the hands of the distributee foreign corporation shall be the basis of such property in the hands of the distributing domestic corporation, increased by the amount of gain (if any), or reduced by the amount of loss (if any), recognized by the domestic corporation on the distribution of each of the respective properties pursuant to paragraph (b)(1) of this section.

(ii) *Dividend treatment under section 1248*. With respect to the treatment as a dividend of a portion of the gain recognized by the domestic corporation on the distribution of the stock of certain domestic and foreign corporations, see section 1248 (a) and (e) and the regulations thereunder. With respect to the treatment as a dividend of a portion of the gain realized but not otherwise recognized under paragraph (b)(1) of this section by the domestic corporation on the distribution of the stock of a foreign corporation (including a foreign corporation, the stock of which is a U.S. real property interest, because such corporation has in effect a valid election under section 897(i)), see section 1248(f) and the regulations thereunder.

(iii) *Exchange under section 897(e)(1)*. With respect to the treatment under section 897(e)(1) of a distributee foreign corporation whose interest in the distributing domestic corporation is a U.S. real property interest, see § 1.897–5T(b)(3)(iv)(A).

(iv) *Distribution of stock of a passive foreign investment company*. [Reserved]

(v) *Carryover of tax attributes*. In regard to the carryover of certain tax attributes from the domestic corporation to the distributee foreign corporation, see section 381 and the regulations thereunder.

(4) *Examples*. The rules of this paragraph (b) may be illustrated by the following examples.

Example (1). (i) FC, a Country X corporation, owns all of the outstanding stock of DC, a domestic corporation. All of the property of DC has appreciated in value and is used in the conduct of a trade or business in Country X. None of the DC property is used in connection with the conduct of a trade or business within the United States. In a liquidation under section 332, DC distributes all of its property to FC.

(ii) Under paragraph (b)(1) of this section, DC recognizes gain on the distribution of its property to FC. FC takes a basis in each property equal to DC's basis in the property increased by the amount of any gain recognized by DC on the distribution of the property.

Example (2). (i) FC, a Country X corporation that is not a controlled foreign corporation, owns all of the outstanding stock of DC, a domestic corporation. DC owns Parcel P (a U.S. real property interest), equipment used in the conduct of a trade or business in the United States, and all of the stock in DC1, a domestic corporation, and FS, a foreign corporation that is not a passive foreign investment company. All of the property has appreciated in value since acquired by DC. DC, DC1, and FS have never been U.S. real property holding corporations.

(ii) DC distributes all of its property to FC in complete liquidation under section 332 on March 1, 1988. Beginning immediately after the distribution of the equipment, FC uses the equipment in the conduct of a trade or business in the U.S.

(iii) Under paragraph (b)(2)(ii) of this section, DC does not recognize gain on the distribution of Parcel P. If DC and FC comply with the requirements of paragraph (b)(2)(i) of this section, DC will not recognize gain on the distribution of the equipment, because FC uses the equipment in the conduct of a U.S. trade or business immediately after the distribution. DC must recognize gain pursuant to paragraph (b)(1) of this section on the distribution of the stock of DC1 and FS because there is no exception from gain recognition for the liquidating distribution of stock that is not held by the distributing

corporation for sale to customers in the ordinary course or as inventory unless the corporation the stock of which is being distributed is a U.S. real property holding corporation. In regard to the treatment of DC under section 1248, see, however, section 1248 (a) and (e) and the regulations thereunder.

(iv) FC takes DC's basis under paragraph (b)(3)(i) of this section in Parcel P and the equipment because no gain is recognized by DC on the distribution of that property. Under paragraph (b)(3)(i) of this section, FC takes DC's basis in the stock of DC1 and FS, increased by the amount of the gain recognized by DC on the respective stocks.

(c) *Distribution by a foreign corporation*—(1) *Recognition of gain generally not required.* If a foreign corporation makes a distribution of property in complete liquidation under section 332 to another foreign corporation that meets the stock ownership requirements of section 332(b) with respect to stock in the distributing foreign corporation, then, except as provided in paragraph (c)(2) of this section, section 337 (a) and (b)(1) shall apply and the distributing foreign corporation shall not recognize gain (or loss) on the distribution under section 367(e)(2). If a distributing foreign corporation distributes an interest as a partner in a partnership (whether foreign or domestic), then such corporation shall be treated as having distributed a proportionate share of the property of the partnership in accordance with the principles of paragraph (b)(1)(iii) of this section.

(2) *Recognition of gain required*—(i) *Property used in a United States trade or business*—(A) *In general.* A foreign corporation (including a corporation that has made an effective election under section 897(i)) that makes a distribution of property in complete liquidation under section 332 to another foreign corporation that meets the stock ownership requirements of section 332(b) with respect to the stock in the distributing foreign corporation shall recognize gain on the distribution of any property (other than U.S. real property interests) used by the distributing foreign corporation at the time of the liquidation in the conduct of a trade or business within the United States unless the distributee foreign corporation for a ten-year period continues to use such property in the conduct of a trade or business within the United States, and the distributing and distributee foreign corporations attach the statement described in paragraph (c)(2)(i)(B) to their U.S. income tax returns for their taxable years that include the distribution. However, this paragraph (c)(2)(i)(A) shall not apply if all of the following conditions exist.

(*1*) At the time of the distribution, the distributing and the distributee foreign corporations are controlled foreign corporations as defined in section 957 (a) or (b) or section 953(c) (including a corporation that would be treated as a controlled foreign corporation under section 953(c) but for the provisions of section 953(c)(3));

(*2*) The distributee foreign corporation uses such property in the conduct of a trade or business within the United States immediately after the distribution;

(*3*) There was no prior liquidation subject to section 367(e)(2) of a corporation into the distributing corporation (or a predecessor corporation) under paragraph (b)(2)(i) or this paragraph (c)(2)(i) (other than a controlled foreign corporation into another controlled foreign corporation); and

(*4*) The distributee foreign corporation is not entitled to benefits under a comprehensive income tax treaty, but if the distributing foreign corporation (or predecessor corporation) was entitled to benefits under a comprehensive income tax treaty, then the distributee foreign corporation may (but need not) be entitled to benefits under a comprehensive income tax treaty.

(B) *Required statement.* The statement required by paragraph (c)(2)(i)(A) shall be prepared by or on behalf of the distributing foreign corporation and signed under penalties of perjury by an authorized officer of each of the distributing and distributee foreign corporations, and shall be identical to the statement described in paragraph (b)(2)(i)(B), except that ''§ 1.367(e)–2T(c)(2)(i)'' shall be substituted for references to ''§ 1.367(e)–2T(b)(2)(i)'' and the term *distributing foreign corporation* shall be substituted for either the term *domestic corporation* or the term *distributing domestic corporation* each time it appears. References in the rules of paragraph (b)(2)(i)(B) to various rules

in paragraph (b) shall be applied as if such references were to this paragraph (c). However, the distributee foreign corporation shall not be required to waive its income tax treaty benefits as required by §1.367(e)–2T(b)(2)(i)(B)(*4*) unless the distributing foreign corporation was required to waive its treaty benefits under paragraph (b)(2)(i)(B)(*4*) of this section in connection with the distribution of such property in a prior liquidation distribution subject to the provisions of this section; the distributee foreign corporation is entitled to benefits under a treaty to which the distributing foreign corporation was not entitled; or the distributee foreign corporation is incorporated in a country different from the country in which the distributing foreign corporation is incorporated.

(C) *Effect of submitting or failing to submit a statement.* By the distributing foreign corporation's claiming nonrecognition under this paragraph (c)(2)(i), the distributing foreign corporation and the distributee foreign corporation agree to be subject to the rules of this paragraph (c)(2)(i) and the rules of paragraph (b)(2)(i)(C). In applying the rules of paragraph (b)(2)(i)(C), the term *distributing foreign corporation* shall be substituted for either the term *domestic corporation* or the term *distributing domestic corporation* each time it appears. References in the rules of paragraph (b)(2)(i)(C) to various rules in paragraph (b) shall be applied as if such references were to this paragraph (c). However, if a distributing foreign corporation that would otherwise qualify for nonrecognition on the distribution of such property under this paragraph (c)(2)(i) fails to file the statement properly or files a statement that does not comply with the requirements of this paragraph, the Commissioner may, nevertheless, in his discretion treat the distributing foreign corporation as if it had, in fact, met all the requirements of this paragraph if such treatment is necessary to prevent the taxpayer from otherwise deriving a tax benefit by such failure.

(ii) *Property formerly used in a United States trade or business.* A foreign corporation making a distribution of property in complete liquidation under section 332 to another foreign corporation that meets the stock ownership requirements of section 332(b) with respect to stock in the distributing foreign corporation shall recognize gain (but not loss) on the distribution of any property (other than U.S. real property interests) that ceased, in a taxable year beginning after December 31, 1986, and within ten years prior to the date of liquidation, to be used in connection with the conduct of a trade or business within the United States. Section 864(c)(7) shall govern the treatment of any gain recognized on the distribution of assets described in this paragraph as income effectively connected with the conduct of a trade or business within the United States.

(3) *Other consequences*—(i) *Distributee basis in property.* The basis of distributed property in the hands of the distributee foreign corporation shall be the basis of the distributed property in the hands of the distributing foreign corporation, increased by the amount of gain (if any) recognized by the distributing foreign corporation on the distribution of the property. However, the basis of the distributed property in the hands of the distributee foreign corporation shall not exceed the fair market value of such property where the distributing foreign corporation recognizes gain on the distribution under this section and the distributee foreign corporation recognizes gain under section 897(e) or the regulations thereunder. See §1.897–5T(b)(3)(iv)(B).

(ii) *Distribution under section 367(b).* With respect to the treatment of certain distributee foreign corporations under section 367(b), see §7.367(b)–5(c).

(iii) *Distribution or exchange of U.S. real property interests.* With respect to the treatment under section 897(d) of a distributing foreign corporation on the distribution of a U.S. real property interest, see §1.897–5T(c)(2)(i) and (ii). With respect to the treatment under section 897(e) of the distributee foreign corporation where the distributing foreign corporation has made an election under section 897(i) and the stock of such corporation is treated as a U.S. real property interest, see §1.897–5T(b)(3)(iv)(B).

(iv) *Distribution of stock of a passive foreign investment company.* [Reserved]

(v) *Carryover of tax attributes.* In regard to the carryover of certain tax attributes from the distributing foreign corporation to the distributee foreign corporation, see section 381 and the regulations thereunder.

(4) *Examples.* The rules of this paragraph (c) may be illustrated by the following examples.

Example (1). (i) FX1, a Country Y corporation, owns all of the outstanding stock of FX2, a Country Y corporation that is not a passive foreign investment company. FX2 owns Parcel P (a U.S. real property interest), Asset #1 that formerly was used by FX2 in its U.S. trade or business, and Asset #2 currently used by FX2 in its U.S. trade or business. Asset #1 ceased to be used in a U.S. trade or business on September 30, 1987. All of the property has appreciated in value since acquired by FX2.

(ii) In a liquidation under section 332, FX2 distributes all of its property to FX1 on December 31, 1989. FX1 uses Asset #2 in the conduct of a trade or business in the United States immediately after the distribution.

(iii) Under paragraphs (c)(1) and (2) of this section, FX2 does not recognize gain under section 367(e)(2) on the distribution of Parcel P. Any gain realized on Parcel P may be subject to taxation under section 897 (d) if certain procedural requirements contained in §1.897–5T(d)(1)(iii) are not followed. FX2 must recognize gain on the distribution of Asset #1 under paragraph (c)(2)(ii) of this section. Section 864 (c)(7) shall govern the treatment of the gain recognized by FX2 on Asset #1 as income effectively connected with a trade or business in the United States. Because FX2 used and FX1 uses Asset #2 in the conduct of a trade or business in the United States, FX2 will not recognize gain under paragraph (c)(2)(i) of this section on the distribution of Asset #2 if FX1 and FX2 comply with the requirements of that paragraph.

(iv) Under paragraph (c)(3)(i) of this section, FX1 takes FX2's basis in Parcel P and Asset #2 if there is compliance with the requirements. Under paragraph (c)(3)(i) of this section, FX1 takes FX2's basis in Asset #l increased by the gain recognized.

Example (2). (i) FY1, a Country F corporation, owns all of the outstanding stock of FY2, a Country F corporation that is not a passive foreign investment company. FY2 owns Parcel P (a U.S. real property interest held for investment) and machinery used in its U.S. trade or business. FY2 has made an effective election under section 897(i), and the FY2 stock is treated as a U.S. real property interest.

(ii) In a liquidation under section 332, FY2 distributes all of its property to FY1. FY1 will use the machinery in the conduct of a trade or business in the United States immediately after the distribution.

(iii) Under paragraphs (c)(1) and (2) of this section, FY2 does not recognize gain under section 367(e)(2) on the distribution of Parcel P. Any gain realized on Parcel P may be subject to taxation under section 897(d) if certain procedural requirements contained in §1.897–5T(d)(1)(iii) are not followed. Because FY2 used and FY1 continues to use the machinery in the conduct of a trade or business in the United States, FY2 does not recognize gain on the distribution of the machinery under paragraph (c)(2)(i) of this section if FY1 and FY2 comply with the requirements of that paragraph.

(iv) Under paragraph (c)(3)(i) of this section, FY1 takes FY2's basis in Parcel P. Under paragraph (c)(3)(i) of this section, FY1 takes FY2's basis in the machinery. See §1.897–5T(b)(3)(iv)(B) for the treatment of FY1 under section 897 (e).

(d) *Effective date.* This section shall be effective for distributions after July 31, 1986, pursuant to section 337(a) as in effect after the effective dates of the amendments of section 631 of the Tax Reform Act of 1986, except that it shall not apply in the case of any corporation completely liquidated before June 10, 1987, into a corporation organized in a country which then had an income tax treaty with the United States. See section 1006(e)(13) of the Technical and Miscellaneous Revenue Act of 1988 (102 Stat. 3342, Public Law 100–647).

[T.D. 8280, 55 FR 1412, Jan. 16, 1990]

SPECIAL RULE; DEFINITIONS

§ 1.368–1 Purpose and scope of exception of reorganization exchanges.

(a) *Reorganizations.* As used in the regulations under parts I, II, and III (section 301 and following), subchapter C, chapter 1 of the Code, the terms *reorganization* and *party to a reorganization* mean only a reorganization or a party to a reorganization as defined in subsections (a) and (b) of section 368. In determining whether a transaction qualifies as a reorganization under section 368(a), the transaction must be evaluated under relevant provisions of law, including the step transaction doctrine. But see §§ 1.368–2 (f) and (k) and 1.338–2(c)(3). The preceding two sentences apply to transactions occurring after January 28, 1998, except that they do not apply to any transaction occurring pursuant to a written agreement

which is binding on January 28, 1998, and at all times thereafter. With respect to insolvency reorganizations, see part IV, subchapter C, chapter 1 of the Code.

(b) *Purpose.* Under the general rule, upon the exchange of property, gain or loss must be accounted for if the new property differs in a material particular, either in kind or in extent, from the old property. The purpose of the reorganization provisions of the Code is to except from the general rule certain specifically described exchanges incident to such readjustments of corporate structures made in one of the particular ways specified in the Code, as are required by business exigencies and which effect only a readjustment of continuing interest in property under modified corporate forms. Requisite to a reorganization under the Internal Revenue Code are a continuity of the business enterprise through the issuing corporation under the modified corporate form as described in paragraph (d) of this section, and (except as provided in section 368(a)(1)(D)) a continuity of interest as described in paragraph (e) of this section. (For rules regarding the continuity of interest requirement under section 355, see § 1.355–2(c).) For purposes of this section, the term *issuing corporation* means the acquiring corporation (as that term is used in section 368(a)), except that, in determining whether a reorganization qualifies as a triangular reorganization (as defined in § 1.358–6(b)(2)), the issuing corporation means the corporation in control of the acquiring corporation. The preceding three sentences apply to transactions occurring after January 28, 1998, except that they do not apply to any transaction occurring pursuant to a written agreement which is binding on January 28, 1998, and at all times thereafter. The continuity of business enterprise requirement is described in paragraph (d) of this section. The Code recognizes as a reorganization the amalgamation (occurring in a specified way) of two corporate enterprises under a single corporate structure if there exists among the holders of the stock and securities of either of the old corporations the requisite continuity of interest in the new corporation, but there is not a reorganization if the holders of the stock and securities of the old corporation are merely the holders of short-term notes in the new corporation. In order to exclude transactions not intended to be included, the specifications of the reorganization provisions of the law are precise. Both the terms of the specifications and their underlying assumptions and purposes must be satisfied in order to entitle the taxpayer to the benefit of the exception from the general rule. Accordingly, under the Code, a short-term purchase money note is not a security of a party to a reorganization, an ordinary dividend is to be treated as an ordinary dividend, and a sale is nevertheless to be treated as a sale even though the mechanics of a reorganization have been set up.

(c) *Scope.* The nonrecognition of gain or loss is prescribed for two specifically described types of exchanges, viz: The exchange that is provided for in section 354(a)(1) in which stock or securities in a corporation, a party to a reorganization, are, in pursuance of a plan of reorganization, exchanged for the stock or securities in a corporation, a party to the same reorganization; and the exchange that is provided for in section 361(a) in which a corporation, a party to a reorganization, exchanges property, in pursuance of a plan of reorganization, for stock or securities in another corporation, a party to the same reorganization. Section 368(a)(1) limits the definition of the term *reorganization* to six kinds of transactions and excludes all others. From its context, the term *a party to a reorganization* can only mean a party to a transaction specifically defined as a reorganization by section 368(a). Certain rules respecting boot received in either of the two types of exchanges provided for in section 354(a)(1) and section 361(a) are prescribed in sections 356, 357, and 361(b). A special rule respecting a transfer of property with a liability in excess of its basis is prescribed in section 357(c). Under section 367 a limitation is placed on all these provisions by providing that except under specified conditions foreign corporations shall not be deemed within their scope. The provisions of the Code referred to in this paragraph are inapplicable unless there is a plan of reorganization. A plan of

reorganization must contemplate the bona fide execution of one of the transactions specifically described as a reorganization in section 368(a) and for the bona fide consummation of each of the requisite acts under which nonrecognition of gain is claimed. Such transaction and such acts must be an ordinary and necessary incident of the conduct of the enterprise and must provide for a continuation of the enterprise. A scheme, which involves an abrupt departure from normal reorganization procedure in connection with a transaction on which the imposition of tax is imminent, such as a mere device that puts on the form of a corporate reorganization as a disguise for concealing its real character, and the object and accomplishment of which is the consummation of a preconceived plan having no business or corporate purpose, is not a plan of reorganization.

(d) *Continuity of business enterprise*—(1) *General rule.* Continuity of business enterprise (COBE) requires that the issuing corporation (P), as defined in paragraph (b) of this section, either continue the target corporation's (T's) historic business or use a significant portion of T's historic business assets in a business. The preceding sentence applies to transactions occurring after January 28, 1998, except that it does not apply to any transaction occurring pursuant to a written agreement which is binding on January 28, 1998, and at all times thereafter. The application of this general rule to certain transactions, such as mergers of holding companies, will depend on all facts and circumstances. The policy underlying this general rule, which is to ensure that reorganizations are limited to readjustments of continuing interests in property under modified corporate form, provides the guidance necessary to make these facts and circumstances determinations.

(2) *Business continuity.* (i) The continuity of business enterprise requirement is satisfied if *P* continues *T'* s historic business. The fact *P* is in the same line of business as *T* tends to establish the requisite continuity, but is not alone sufficient.

(ii) If *T* has more than one line of business, continuity of business enterprise requires only that *P* continue a significant line of business.

(iii) In general, a corporation's historic business is the business it has conducted most recently. However, a corporation's historic business is not one the corporation enters into as part of a plan of reorganization.

(iv) All facts and circumstances are considered in determining the time when the plan comes into existence and in determining whether a line of business is ''significant''.

(3) *Asset continuity.* (i) The continuity of business enterprise requirement is satisfied if *P* uses a significant portion of *T'* s historic business assets in a business.

(ii) A corporation's historic business assets are the assets used in its historic business. Business assets may include stock and securities and intangible operating assets such as good will, patents, and trademarks, whether or not they have a tax basis.

(iii) In general, the determination of the portion of a corporation's assets considered ''significant'' is based on the relative importance of the assets to operation of the business. However, all other facts and circumstances, such as the net fair market value of those assets, will be considered.

(4) *Acquired assets or stock held by members of the qualified group or partnerships.* The following rules apply in determining whether the COBE requirement of paragraph (d)(1) of this section is satisfied:

(i) *Businesses and assets of members of a qualified group.* The issuing corporation is treated as holding all of the businesses and assets of all of the members of the qualified group, as defined in paragraph (d)(4)(ii) of this section.

(ii) *Qualified group.* A qualified group is one or more chains of corporations connected through stock ownership with the issuing corporation, but only if the issuing corporation owns directly stock meeting the requirements of section 368(c) in at least one other corporation, and stock meeting the requirements of section 368(c) in each of the corporations (except the issuing corporation) is owned directly by one of the other corporations.

(iii) *Partnerships*—(A) *Partnership assets.* Each partner of a partnership will

be treated as owning the T business assets used in a business of the partnership in accordance with that partner's interest in the partnership.

(B) *Partnership businesses.* The issuing corporation will be treated as conducting a business of a partnership if —

(*1*) Members of the qualified group, in the aggregate, own an interest in the partnership representing a significant interest in that partnership business; or

(*2*) One or more members of the qualified group have active and substantial management functions as a partner with respect to that partnership business.

(C) *Conduct of the historic T business in a partnership.* If a significant historic T business is conducted in a partnership, the fact that P is treated as conducting such T business under paragraph (d)(4)(iii)(B) of this section tends to establish the requisite continuity, but is not alone sufficient.

(iv) *Effective date.* This paragraph (d)(4) applies to transactions occurring after January 28, 1998, except that it does not apply to any transaction occurring pursuant to a written agreement which is binding on January 28, 1998, and at all times thereafter.

(5) *Examples.* The following examples illustrate this paragraph (d). All corporations have only one class of stock outstanding. The preceding sentence and paragraph (d)(5) *Example 6* through *Example 12* apply to transactions occurring after January 28, 1998, except that they do not apply to any transaction occurring pursuant to a written agreement which is binding on January 28, 1998, and at all times thereafter.

Example 1. T conducts three lines of business: manufacture of synthetic resins, manufacture of chemicals for the textile industry, and distribution of chemicals. The three lines of business are approximately equal in value. On July 1, 1981, *T* sells the synthetic resin and chemicals distribution businesses to a third party for cash and marketable securities. On December 31, 1981, *T* transfers all of its assets to *P* solely for *P* voting stock. *P* continues the chemical manufacturing business without interruption. The continuity of business enterprise requirement is met. Continuity of business enterprise requires only that *P* continue one of *T'* s three significant lines of business.

Example 2. P manufactures computers and *T* manufactures components for computers. *T* sells all of its output to *P*. On January 1, 1981, *P* decides to buy imported components only. On March 1, 1981, *T* merges into *P*. *P* continues buying imported components but retains *T'* s equipment as a backup source of supply. The use of the equipment as a backup source of supply constitutes use of a significant portion of *T'* s historic business assets, thus establishing continuity of business enterprise. *P* is not required to continue *T'* s business.

Example 3. T is a manufacturer of boys' and men's trousers. On January 1, 1978, as part of a plan of reorganization, *T* sold all of its assets to a third party for cash and purchased a highly diversified portfolio of stocks and bonds. As part of the plan *T* operates an investment business until July 1, 1981. On that date, the plan of reorganization culminates in a transfer by *T* of all its assets to *P*, a regulated investment company, solely in exchange for *P* voting stock. The continuity of business enterprise requirement is not met. *T'* s investment activity is not its historic business, and the stocks and bonds are not *T'* s historic business assets.

Example 4. T manufactures children's toys and *P* distributes steel and allied products. On January 1, 1981, *T* sells all of its assets to a third party for $100,000 cash and $900,000 in notes. On March 1, 1981, *T* merges into *P*. Continuity of business enterprise is lacking. The use of the sales proceeds in *P'* s business is not sufficient.

Example 5. T manufactures farm machinery and *P* operates a lumber mill. *T* merges into *P*. *P* disposes of *T'* s assets immediately after the merger as part of the plan of reorganization. *P* does not continue *T'* s farm machinery manufacturing business. Continuity of business enterprise is lacking.

Example 6. Use of a significant portion of T's historic business assets by the qualified group. (i) *Facts.* T operates an auto parts distributorship. P owns 80 percent of the stock of a holding company (HC). HC owns 80 percent of the stock of ten subsidiaries, S–1 through S–10. S–1 through S–10 each separately operate a full service gas station. Pursuant to a plan of reorganization, T merges into P and the T shareholders receive solely P stock. As part of the plan of reorganization, P transfers T's assets to HC, which in turn transfers some of the T assets to each of the ten subsidiaries. No one subsidiary receives a significant portion of T's historic business assets. Each of the subsidiaries will use the T assets in the operation of its full service gas station. No P subsidiary will be an auto parts distributor.

(ii) *Continuity of business enterprise.* Under paragraph (d)(4)(i) of this section, P is treated as conducting the ten gas station businesses of S–1 through S–10 and as holding the historic T assets used in those businesses. P is treated as holding all the assets and conducting the businesses of all of the members of the qualified group, which includes S–1

through S–10 (paragraphs (d)(4)(i) and (ii) of this section). No member of the qualified group continues T's historic distributorship business. However, subsidiaries S–1 through S–10 continue to use the historic T assets in a business. Even though no one corporation of the qualified group is using a significant portion of T's historic business assets in a business, the COBE requirement of paragraph (d)(1) of this section is satisfied because, in the aggregate, the qualified group is using a significant portion of T's historic business assets in a business.

Example 7. Continuation of the historic T business in a partnership satisfies continuity of business enterprise. (i) *Facts.* T manufactures ski boots. P owns all of the stock of S–1. S–1 owns all of the stock of S–2, and S–2 owns all of the stock of S–3. T merges into P and the T shareholders receive consideration consisting of P stock and cash. The T ski boot business is to be continued and expanded. In anticipation of this expansion, P transfers all of the T assets to S–1, S–1 transfers all of the T assets to S–2, and S–2 transfers all of the T assets to S–3. S–3 and X (an unrelated party) form a new partnership (PRS). As part of the plan of reorganization, S–3 transfers all the T assets to PRS, and S–3, in its capacity as a partner, performs active and substantial management functions for the PRS ski boot business, including making significant business decisions and regularly participating in the overall supervision, direction, and control of the employees of the ski boot business. S–3 receives a 20 percent interest in PRS. X transfers cash in exchange for an 80 percent interest in PRS.

(ii) *Continuity of business enterprise.* Under paragraph (d)(4)(iii)(B)(*2*) of this section, P is treated as conducting T's historic business because S–3 performs active and substantial management functions for the ski boot business in S–3's capacity as a partner. P is treated as holding all the assets and conducting the businesses of all of the members of the qualified group, which includes S–3 (paragraphs (d)(4)(i) and (ii) of this section). The COBE requirement of paragraph (d)(1) of this section is satisfied.

Example 8. Continuation of the historic T business in a partnership does not satisfy continuity of business enterprise. (i) *Facts.* The facts are the same as *Example 7* except that S–3 transfers the historic T business to PRS in exchange for a 1 percent interest in PRS.

(ii) *Continuity of business enterprise.* Under paragraph (d)(4)(iii)(B)(*2*) of this section, P is treated as conducting T's historic business because S–3 performs active and substantial management functions for the ski boot business in S–3's capacity as a partner. The fact that a significant historic T business is conducted in PRS, and P is treated as conducting such T business under (d)(4)(iii)(B) tends to establish the requisite continuity, but is not alone sufficient (paragraph (d)(4)(iii)(C) of this section). The COBE requirement of paragraph (d)(1) of this section is not satisfied.

Example 9. Continuation of the T historic business in a partnership satisfies continuity of business enterprise. (i) *Facts.* The facts are the same as *Example 7* except that S–3 transfers the historic T business to PRS in exchange for a 33⅓ percent interest in PRS, and no member of P's qualified group performs active and substantial management functions for the ski boot business operated in PRS.

(ii) *Continuity of business enterprise.* Under paragraph (d)(4)(iii)(B)(*1*) of this section, P is treated as conducting T's historic business because S–3 owns an interest in the partnership representing a significant interest in that partnership business. P is treated as holding all the assets and conducting the businesses of all of the members of the qualified group, which includes S–3 (paragraphs (d)(4)(i) and (ii) of this section). The COBE requirement of paragraph (d)(1) of this section is satisfied.

Example 10. Use of T's historic business assets in a partnership business. (i) *Facts.* T is a fabric distributor. P owns all of the stock of S–1. T merges into P and the T shareholders receive solely P stock. S–1 and X (an unrelated party) own interests in a partnership (PRS). As part of the plan of reorganization, P transfers all of the T assets to S–1, and S–1 transfers all the T assets to PRS, increasing S–1's percentage interest in PRS from 5 to 33⅓ percent. After the transfer, X owns the remaining 66⅔ percent interest in PRS. Almost all of the T assets consist of T's large inventory of fabric, which PRS uses to manufacture sportswear. All of the T assets are used in the sportswear business. No member of P's qualified group performs active and substantial management functions for the sportswear business operated in PRS.

(ii) *Continuity of business enterprise.* Under paragraph (d)(4)(iii)(A) of this section, S–1 is treated as owning 33⅓ percent of the T assets used in the PRS sportswear manufacturing business. Under paragraph (d)(4)(iii)(B)(*1*) of this section, P is treated as conducting the sportswear manufacturing business because S–1 owns an interest in the partnership representing a significant interest in that partnership business. P is treated as holding all the assets and conducting the businesses of all of the members of the qualified group, which includes S–1 (paragraphs (d)(4)(i) and (ii) of this section). The COBE requirement of paragraph (d)(1) of this section is satisfied.

Example 11. Aggregation of partnership interests among members of the qualified group: use of T's historic business assets in a partnership business. (i) *Facts.* The facts are the same as *Example 10,* except that S–1 transfers all the T assets to PRS, and P and X each transfer

cash to PRS in exchange for partnership interests. After the transfers, P owns 11 percent, S–1 owns 22⅓ percent, and X owns 66⅔ percent of PRS.

(ii) *Continuity of business enterprise.* Under paragraph (d)(4)(iii)(B)(*1*) of this section, P is treated as conducting the sportswear manufacturing business because members of the qualified group, in the aggregate, own an interest in the partnership representing a significant interest in that business. P is treated as owning 11 percent of the assets directly, and S–1 is treated as owning 22⅓ percent of the assets, used in the PRS sportswear business (paragraph (d)(4)(iii)(A) of this section). P is treated as holding all the assets of all of the members of the qualified group, which includes S–1, and thus in the aggregate, P is treated as owning 33⅓ of the T assets (paragraphs (d)(4)(i) and (ii) of this section). The COBE requirement of paragraph (d)(1) of this section is satisfied because P is treated as using a significant portion of T's historic business assets in its sportswear manufacturing business.

Example 12. Tiered partnerships: use of T's historic business assets in a partnership business. (i) *Facts.* T owns and manages a commercial office building in state Z. Pursuant to a plan of reorganization, T merges into P, solely in exchange for P stock, which is distributed to the T shareholders. P transfers all of the T assets to a partnership, PRS–1, which owns and operates television stations nationwide. After the transfer, P owns a 50 percent interest in PRS–1. P does not have active and substantial management functions as a partner with respect to the PRS–1 business. X, not a member of P's qualified group, owns the remaining 50 percent interest in PRS–1. PRS–1, in an effort to expand its state Z television operation, enters into a joint venture with U, an unrelated party. As part of the plan of reorganization, PRS–1 transfers all the T assets and its state Z television station to PRS–2, in exchange for a 75 percent partnership interest. U contributes cash to PRS–2 in exchange for a 25 percent partnership interest and oversees the management of the state Z television operation. PRS–1 does not actively and substantially manage PRS–2's business. PRS–2's state Z operations are moved into the acquired T office building. All of the assets that P acquired from T are used in PRS–2's business.

(ii) *Continuity of business enterprise.* Under paragraph (d)(4)(iii)(A) of this section, PRS–1 is treated as owning 75 percent of the T assets used in PRS–2's business. P, in turn, is treated as owning 50 percent of PRS–1's interest the T assets. Thus, P is treated as owning 37½ percent (50 percent x 75 percent) of the T assets used in the PRS–2 business. Under paragraph (d)(4)(iii)(B)(*1*) of this section, P is treated as conducting PRS–2's business, the operation of the state Z television station, and under paragraph (d)(4)(iii)(A) of this section, P is treated as using 37½ percent of the historic T business assets in that business. The COBE requirement of paragraph (d)(1) of this section is satisfied because P is treated as using a significant portion of T's historic business assets in its television business.

(e) *Continuity of interest*—(1) *General rule.* (i) The purpose of the continuity of interest requirement is to prevent transactions that resemble sales from qualifying for nonrecognition of gain or loss available to corporate reorganizations. Continuity of interest requires that in substance a substantial part of the value of the proprietary interests in the target corporation be preserved in the reorganization. A proprietary interest in the target corporation is preserved if, in a potential reorganization, it is exchanged for a proprietary interest in the issuing corporation (as defined in paragraph (b) of this section), it is exchanged by the acquiring corporation for a direct interest in the target corporation enterprise, or it otherwise continues as a proprietary interest in the target corporation. However, a proprietary interest in the target corporation is not preserved if, in connection with the potential reorganization, it is acquired by the issuing corporation for consideration other than stock of the issuing corporation, or stock of the issuing corporation furnished in exchange for a proprietary interest in the target corporation in the potential reorganization is redeemed. All facts and circumstances must be considered in determining whether, in substance, a proprietary interest in the target corporation is preserved. For purposes of the continuity of interest requirement, a mere disposition of stock of the target corporation prior to a potential reorganization to persons not related (as defined in paragraph (e)(3) of this section determined without regard to paragraph (e)(3)(i)(A) of this section) to the target corporation or to persons not related (as defined in paragraph (e)(3) of this section) to the issuing corporation is disregarded and a mere disposition of stock of the issuing corporation received in a potential

reorganization to persons not related (as defined in paragraph (e)(3) of this section) to the issuing corporation is disregarded.

(ii) [Reserved] For further guidance see § 1.368–1T(e)(1)(ii)(A) and (B).

(2) *Related person acquisitions.* (i) A proprietary interest in the target corporation is not preserved if, in connection with a potential reorganization, a person related (as defined in paragraph (e)(3) of this section) to the issuing corporation acquires, with consideration other than a proprietary interest in the issuing corporation, stock of the target corporation or stock of the issuing corporation furnished in exchange for a proprietary interest in the target corporation in the potential reorganization, except to the extent those persons who were the direct or indirect owners of the target corporation prior to the potential reorganization maintain a direct or indirect proprietary interest in the issuing corporation.

(ii) [Reserved] For further guidance see § 1.368–1T(e)(2)(ii).

(3) *Definition of related person*—(i) *In general.* For purposes of this paragraph (e), two corporations are related persons if either—

(A) The corporations are members of the same affiliated group as defined in section 1504 (determined without regard to section 1504(b)); or

(B) A purchase of the stock of one corporation by another corporation would be treated as a distribution in redemption of the stock of the first corporation under section 304(a)(2) (determined without regard to § 1.1502–80(b)).

(ii) *Special rules.* The following rules apply solely for purposes of this paragraph (e)(3):

(A) A corporation will be treated as related to another corporation if such relationship exists immediately before or immediately after the acquisition of the stock involved.

(B) A corporation, other than the target corporation or a person related (as defined in paragraph (e)(3) of this section determined without regard to paragraph (e)(3)(i)(A) of this section) to the target corporation, will be treated as related to the issuing corporation if the relationship is created in connection with the potential reorganization.

(4) *Acquisitions by partnerships.* For purposes of this paragraph (e), each partner of a partnership will be treated as owning or acquiring any stock owned or acquired, as the case may be, by the partnership in accordance with that partner's interest in the partnership. If a partner is treated as acquiring any stock by reason of the application of this paragraph (e)(4), the partner is also treated as having furnished its share of any consideration furnished by the partnership to acquire the stock in accordance with that partner's interest in the partnership.

(5) *Successors and predecessors.* For purposes of this paragraph (e), any reference to the issuing corporation or the target corporation includes a reference to any successor or predecessor of such corporation, except that the target corporation is not treated as a predecessor of the issuing corporation and the issuing corporation is not treated as a successor of the target corporation.

(6) *Examples.* For purposes of the examples in this paragraph (e)(6), P is the issuing corporation, T is the target corporation, S is a wholly owned subsidiary of P, all corporations have only one class of stock outstanding, A and B are individuals, PRS is a partnership, all reorganization requirements other than the continuity of interest requirement are satisfied, and the transaction is not otherwise subject to recharacterization. The following examples illustrate the application of this paragraph (e):

Example 1. Sale of stock to third party. (i) *Sale of issuing corporation stock after merger.* A owns all of the stock of T. T merges into P. In the merger, A receives P stock having a fair market value of $50x and cash of $50x. Immediately after the merger, and pursuant to a preexisting binding contract, A sells all of the P stock received by A in the merger to B. Assume that there are no facts and circumstances indicating that the cash used by B to purchase A's P stock was in substance exchanged by P for T stock. Under paragraphs (e)(1) and (2) of this section, the sale to B is disregarded because B is not a person related to P within the meaning of paragraph (e)(3) of this section. Thus, the transaction satisfies the continuity of interest requirement because 50 percent of A's T stock was exchanged for P stock, preserving a substantial part of the value of the proprietary interest in T.

(ii) *Sale of target corporation stock before merger.* The facts are the same as paragraph (i) of this *Example 1,* except that B buys A's T stock prior to the merger of T into P and then exchanges the T stock for P stock having a fair market value of $50x and cash of $50x. The sale by A is disregarded. The continuity of interest requirement is satisfied because B's T stock was exchanged for P stock, preserving a substantial part of the value of the proprietary interest in T.

Example 2. Relationship created in connection with potential reorganization. A owns all of the stock of T. X, a corporation which owns 60 percent of the P stock and none of the T stock, buys A's T stock for cash prior to the merger of T into P. X exchanges the T stock solely for P stock in the merger which, when combined with X's prior ownership of P stock, constitutes 80 percent of the stock of P. X is a person related to P under paragraphs (e)(3)(i)(A) and (ii)(B) of this section, because X becomes affiliated with P in the merger. The continuity of interest requirement is not satisfied, because X acquired a proprietary interest in T for consideration other than P stock, and a substantial part of the value of the proprietary interest in T is not preserved. See paragraph (e)(2) of this section.

Example 3. Participation by issuing corporation in post-merger sale. A owns 80 percent of the T stock and none of the P stock, which is widely held. T merges into P. In the merger, A receives P stock. In addition, A obtains rights pursuant to an arrangement with P to have P register the P stock under the Securities Act of 1933, as amended. P registers A's stock, and A sells the stock shortly after the merger. No person who purchased the P stock from A is a person related to P within the meaning of paragraph (e)(3) of this section. Under paragraphs (e)(1) and (2) of this section, the sale of the P stock by A is disregarded because no person who purchased the P stock from A is a person related to P within the meaning of paragraph (e)(3) of this section. The transaction satisfies the continuity of interest requirement because A's T stock was exchanged for P stock, preserving a substantial part of the value of the proprietary interest in T.

Example 4. Redemptions and purchases by issuing corporation or related persons. (i) *Redemption by issuing corporation.* A owns 100 percent of the stock of T and none of the stock of P. T merges into S. In the merger, A receives P stock. In connection with the merger, P redeems all of the P stock received by A in the merger for cash. The continuity of interest requirement is not satisfied, because, in connection with the merger, P redeemed the stock exchanged for a proprietary interest in T, and a substantial part of the value of the proprietary interest in T is not preserved. See paragraph (e)(1) of this section.

(ii) *Purchase of target corporation stock by issuing corporation.* The facts are the same as paragraph (i) of this *Example 4,* except that, instead of P redeeming its stock, prior to and in connection with the merger of T into S, P purchases 90 percent of the T stock from A for cash. The continuity of interest requirement is not satisfied, because in connection with the merger, P acquired a proprietary interest in T for consideration other than P stock, and a substantial part of the value of the proprietary interest in T is not preserved. See paragraph (e)(1) of this section. However, see § 1.338–2(c)(3) (which may change the result in this case by providing that, by virtue of section 338, continuity of interest is satisfied for certain parties after a qualified stock purchase).

(iii) *Purchase of issuing corporation stock by person related to issuing corporation.* The facts are the same as paragraph (i) of this *Example 4,* except that, instead of P redeeming its stock, S buys all of the P stock received by A in the merger for cash. S is a person related to P under paragraphs (e)(3)(i)(A) and (B) of this section. The continuity of interest requirement is not satisfied, because S acquired P stock issued in the merger, and a substantial part of the value of the proprietary interest in T is not preserved. See paragraph (e)(2) of this section.

Example 5. Redemption in substance by issuing corporation. A owns 100 percent of the stock of T and none of the stock of P. T merges into P. In the merger, A receives P stock. In connection with the merger, B buys all of the P stock received by A in the merger for cash. Shortly thereafter, in connection with the merger, P redeems the stock held by B for cash. Based on all the facts and circumstances, P in substance has exchanged solely cash for T stock in the merger. The continuity of interest requirement is not satisfied, because in substance P redeemed the stock exchanged for a proprietary interest in T, and a substantial part of the value of the proprietary interest in T is not preserved. See paragraph (e)(1) of this section.

Example 6. Purchase of issuing corporation stock through partnership. A owns 100 percent of the stock of T and none of the stock of P. S is an 85 percent partner in PRS. The other

15 percent of PRS is owned by unrelated persons. T merges into P. In the merger, A receives P stock. In connection with the merger, PRS purchases all of the P stock received by A in the merger for cash. Under paragraph (e)(4) of this section, S, as an 85 percent partner of PRS, is treated as having acquired 85 percent of the P stock exchanged for A's T stock in the merger, and as having furnished 85 percent of the cash paid by PRS to acquire the P stock. S is a person related to P under paragraphs (e)(3)(i)(A) and (B) of this section. The continuity of interest requirement is not satisfied, because S is treated as acquiring 85 percent of the P stock issued in the merger, and a substantial part of the value of the proprietary interest in T is not preserved. See paragraph (e)(2) of this section.

Example 7. Exchange by acquiring corporation for direct interest. A owns 30 percent of the stock of T. P owns 70 percent of the stock of T, which was not acquired by P in connection with the acquisition of T's assets. T merges into P. A receives cash in the merger. The continuity of interest requirement is satisfied, because P's 70 percent proprietary interest in T is exchanged by P for a direct interest in the assets of the target corporation enterprise.

Example 8. Effect of general stock repurchase program. T merges into P, a corporation whose stock is widely held and publicly traded and that has one class of common stock outstanding. In the merger, T shareholders receive common stock of P. Immediately after the merger, P repurchases a small percentage of its common stock in the open market as part of its ongoing stock repurchase program. The repurchase program was not created or modified in connection with the acquisition of T. Continuity of interest is satisfied, because based on all of the facts and circumstances, the redemption of a small percentage of the P stock does not affect the T shareholders' proprietary interest in T, because it was not in connection with the merger, and the value of the proprietary interest in T is preserved. See paragraph (e)(1) of this section.

Example 9. Maintenance of direct or indirect interest in issuing corporation. X, a corporation, owns all of the stock of each of corporations P and Z. Z owns all of the stock of T. T merges into P. Z receives P stock in the merger. Immediately thereafter and in connection with the merger, Z distributes the P stock received in the merger to X. X is a person related to P under paragraph (e)(3)(i)(A) of this section. The continuity of interest requirement is satisfied, because X was an indirect owner of T prior to the merger who maintains a direct or indirect proprietary interest in P, preserving a substantial part of the value of the proprietary interest in T. See paragraph (e)(2) of this section.

(7) *Effective date.* This paragraph (e) applies to transactions occurring after January 28, 1998, except that it does not apply to any transaction occurring pursuant to a written agreement which is binding on January 28, 1998, and at all times thereafter.

[T.D. 6500, 25 FR 11607, Nov. 26, 1960, as amended by T.D. 7745, 45 FR 86437, Dec. 31, 1980; T.D. 8760, 63 FR 4178, Jan. 28, 1998]

§ 1.368–1T Purpose and scope of exception of reorganization exchanges (temporary).

(a) through (e)(1)(i) [Reserved] For further guidance see § 1.368–1(a) through (e)(1)(i).

(e)(1)(ii)(A) *General rule.* A proprietary interest in the target corporation (other than one held by the acquiring corporation) is not preserved if, prior to and in connection with a potential reorganization, it is redeemed or to the extent that, prior to and in connection with a potential reorganization, an extraordinary distribution is made with respect to it. The determination of whether a distribution with respect to stock of the target corporation is an extraordinary distribution for purposes of this paragraph (e)(1)(ii) will be made on the basis of all of the facts and circumstances, but the treatment of the distribution under section 1059 (relating to extraordinary dividends) will not be taken into account.

(B) *Exception.* Paragraph (e)(1)(ii)(A) of this section does not apply to a distribution of stock by the target corporation to which section 355(a) (or so much of section 356 as relates to section 355) applies, except to the extent that—

(*1*) The target corporation shareholders receive other property or money to which section 356(a) applies; or

(*2*) The distribution is extraordinary in amount and is a distribution of property or money to which section 356(b) applies.

(2)(i) [Reserved] For further guidance, see § 1.368–1(e)(2)(i).

(ii) A proprietary interest in the target corporation is not preserved if, prior to and in connection with a potential reorganization, a person related (as defined in § 1.368–1(e)(3) determined without regard to § 1.368–1(e)(3)(i)(A)) to the target corporation acquires stock of the target corporation, with consideration other than stock of either the

target corporation or the issuing corporation.

(e)(3) through (e)(6) *Example 9.* [Reserved] For further guidance, see § 1.368–1(e)(3) through (e)(6) *Example 9.*

Example 10. (e)(6) *Acquisition of target corporation stock before merger.* (i) *Redemption by target corporation.* A owns 85 percent and B owns 15 percent of the stock of T. The fair market value of T is $100x. Neither A nor B own stock of P. Prior to and in connection with the merger of T into P, T redeems A's T stock for $85x and issues to A its promissory note in exchange for the stock. At the time of the merger T has a value of $15x, after giving effect to the redemption of its stock. In the merger, B receives solely P stock. The continuity of interest requirement is not satisfied because T redeemed A's stock, and a substantial part of the value of the proprietary interest in T is not preserved. See paragraph (e)(1)(ii)(A) of this section.

(ii) *Purchase by person related to target corporation.* The facts are the same as paragraph (i) of this *Example 10,* except that X, T's wholly owned subsidiary, acquires A's T stock prior to and in connection with the merger for cash of $85x. Under paragraph (e)(2)(ii) of this section and § 1.368–1(e)(3)(i)(B), X's acquisition of A's T stock is an acquisition by a related person. The continuity of interest requirement is not satisfied, because X acquired T stock, for consideration other than P stock, and a substantial part of the value of the proprietary interest in T is not preserved. See paragraph (e)(2)(ii) of this section.

Example 11. Extraordinary distribution before merger. A owns all of the stock of T. The fair market value of T is $100x. Prior to and in connection with the merger of T into P, T pays A an extraordinary distribution of an $85x note. T merges into P, and A receives solely P stock. P assumes T's obligation on the note. The continuity of interest requirement is not satisfied, because T paid A an extraordinary distribution, and a substantial part of the value of the proprietary interest in T is not preserved. See paragraph (e)(1)(ii)(A) of this section.

(f) *Effective date.* This section applies to transactions occurring after January 28, 1998, except that it does not apply to any transaction occurring pursuant to a written agreement which is (subject to customary conditions) binding on January 28, 1998, and at all times thereafter.

[T.D. 8761, 63 FR 4185, Jan. 28, 1998]

§ 1.368–2 Definition of terms.

(a) The application of the term *reorganization* is to be strictly limited to the specific transactions set forth in section 368(a). The term does not embrace the mere purchase by one corporation of the properties of another corporation. The preceding sentence applies to transactions occurring after January 28, 1998, except that it does not apply to any transaction occurring pursuant to a written agreement which is binding on January 28, 1998, and at all times thereafter. If the properties are transferred for cash and deferred payment obligations of the transferee evidenced by short-term notes, the transaction is a sale and not an exchange in which gain or loss is not recognized.

(b)(1) In order to qualify as a reorganization under section 368(a)(1)(A) the transaction must be a merger or consolidation effected pursuant to the corporation laws of the United States or a State or territory, or the District of Columbia.

(2) In order for the transaction to qualify under section 368(a)(1)(A) by reason of the application of section 368(a)(2)(D), one corporation (the acquiring corporation) must acquire substantially all of the properties of another corporation (the acquired corporation) partly or entirely in exchange for stock of a corporation which is in control of the acquiring corporation (the controlling corporation), provided that (i) the transaction would have qualified under section 368(a)(1)(A) if the merger had been into the controlling corporation, and (ii) no stock of the acquiring corporation is used in the transaction. The foregoing test of whether the transaction would have qualified under section 368(a)(1)(A) if the merger had been into the controlling corporation means that the general requirements of a reorganization under section 368(a)(1)(A) (such as a business purpose, continuity of business enterprise, and continuity of interest) must be met in addition to the special requirements of section 368(a)(2)(D). Under this test, it is not relevant whether the merger into the controlling corporation could have

been effected pursuant to State or Federal corporation law. The term *substantially all* has the same meaning as it has in section 368(a)(1)(C). Although no stock of the acquiring corporation can be used in the transaction, there is no prohibition (other than the continuity of interest requirement) against using other property, such as cash or securities, of either the acquiring corporation or the parent or both. In addition, the controlling corporation may assume liabilities of the acquired corporation without disqualifying the transaction under section 368(a)(2(D), and for purposes of section 357(a) the controlling corporation is considered a party to the exchange. For example, if the controlling corporation agrees to substitute its stock for stock of the acquired corporation under an outstanding employee stock option agreement, this assumption of liability will not prevent the transaction from qualifying as a reorganization under section 368(a)(2)(D) and the assumption of liability is not treated as money or other property for purposes of section 361(b). Section 368(a)(2)(D) applies whether or not the controlling corporation (or the acquiring corporation) is formed immediately before the merger, in anticipation of the merger, or after preliminary steps have been taken to merge directly into the controlling corporation. Section 368(a)(2)(D) applies only to statutory mergers occurring after October 22, 1968.

(3) For regulations under section 368(a)(2)(E), see paragraph (j) of this section.

(c) In order to qualify as a ''reorganization'' under section 368(a)(1)(B), the acquisition by the acquiring corporation of stock of another corporation must be in exchange solely for all or a part of the voting stock of the acquiring corporation (or, in the case of transactions occurring after December 31, 1963, solely for all or a part of the voting stock of a corporation which is in control of the acquiring corporation), and the acquiring corporation must be in control of the other corporation immediately after the transaction. If, for example, Corporation X in one transaction exchanges nonvoting preferred stock or bonds in addition to all or a part of its voting stock in the acquisition of stock of Corporation Y, the transaction is not a reorganization under section 368(a)(1)(B). Nor is a transaction a reorganization described in section 368(a)(1)(B) if stock is acquired in exchange for voting stock both of the acquiring corporation and of a corporation which is in control of the acquiring corporation. The acquisition of stock of another corporation by the acquiring corporation solely for its voting stock (or solely for voting stock of a corporation which is in control of the acquiring corporation) is permitted tax-free even though the acquiring corporation already owns some of the stock of the other corporation. Such an acquisition is permitted tax-free in a single transaction or in a series of transactions taking place over a relatively short period of time such as 12 months. For example, Corporation A purchased 30 percent of the common stock of Corporation W (the only class of stock outstanding) for cash in 1939. On March 1, 1955, Corporation A offers to exchange its own voting stock for all the stock of Corporation W tendered within 6 months from the date of the offer. Within the 6-months' period Corporation A acquires an additional 60 percent of stock of Corporation W solely for its own voting stock, so that it owns 90 percent of the stock of Corporation W. No gain or loss is recognized with respect to the exchanges of stock of Corporation A for stock of Corporation W. For this purpose, it is immaterial whether such exchanges occurred before Corporation A acquired control (80 percent) of Corporation W or after such control was acquired. If Corporation A had acquired 80 percent of the stock of Corporation W for cash in 1939, it could likewise acquire some or all of the remainder of such stock solely in exchange for its own voting stock without recognition of gain or loss.

(d) In order to qualify as a reorganization under section 368(a)(1)(C), the transaction must be one described in subparagraph (1) or (2) of this paragraph:

(1) One corporation must acquire substantially all the properties of another corporation solely in exchange for all or a part of its own voting stock, or solely in exchange for all or a part of

the voting stock of a corporation which is in control of the acquiring corporation. For example, Corporation P owns all the stock of Corporation A. All the properties of Corporation W are transferred to Corporation A either solely in exchange for voting stock of Corporation P or solely in exchange for less than 80 percent of the voting stock of Corporation A. Either of such transactions constitutes a reorganization under section 368(a)(1)(C). However, if the properties of Corporation W are acquired in exchange for voting stock of both Corporation P and Corporation A, the transaction will not constitute a reorganization under section 368(a)(1)(C). In determining whether the exchange meets the requirement of ''solely for voting stock'', the assumption by the acquiring corporation of liabilities of the transferor corporation, or the fact that property acquired from the transferor corporation is subject to a liability, shall be disregarded. Though such an assumption does not prevent an exchange from being solely for voting stock for the purposes of the definition of a reorganization contained in section 368(a)(1)(C), it may in some cases, however, so alter the character of the transaction as to place the transaction outside the purposes and assumptions of the reorganization provisions. Section 368(a)(1)(C) does not prevent consideration of the effect of an assumption of liabilities on the general character of the transaction but merely provides that the requirement that the exchange be solely for voting stock is satisfied if the only additional consideration is an assumption of liabilities.

(2) One corporation:

(i) Must acquire substantially all of the properties of another corporation in such manner that the acquisition would qualify under (1) above, but for the fact that the acquiring corporation exchanges money, or other property in addition to such voting stock, and

(ii) Must acquire solely for voting stock (either of the acquiring corporation or of a corporation which is in control of the acquiring corporation) properties of the other corporation having a fair market value which is at least 80 percent of the fair market value of all the properties of the other corporation.

(3) For the purposes of subparagraph (2)(ii) only, a liability assumed or to which the properties are subject is considered money paid for the properties. For example, Corporation A has properties with a fair market value of $100,000 and liabilities of $10,000. In exchange for these properties, Corporation Y transfers its own voting stock, assumes the $10,000 liabilities, and pays $8,000 in cash. The transaction is a reorganization even though a part of the properties of Corporation A is acquired for cash. On the other hand, if the properties of Corporation A worth $100,000, were subject to $50,000 in liabilities, an acquisition of all the properties, subject to the liabilities, for any consideration other than solely voting stock would not qualify as a reorganization under this section since the liabilities alone are in excess of 20 percent of the fair market value of the properties. If the transaction would qualify under either subparagraph (1) or (2) of this paragraph and also under section 368(a)(1)(D), such transaction shall not be treated as a reorganization under section 368 (a)(1)(C).

(e) A ''recapitalization'', and therefore a reorganization, takes place if, for example:

(1) A corporation with $200,000 par value of bonds outstanding, instead of paying them off in cash, discharges them by issuing preferred shares to the bondholders;

(2) There is surrendered to a corporation for cancellation 25 percent of its preferred stock in exchange for no par value common stock;

(3) A corporation issues preferred stock, previously authorized but unissued, for outstanding common stock;

(4) An exchange is made of a corporation's outstanding preferred stock, having certain priorities with reference to the amount and time of payment of dividends and the distribution of the corporate assets upon liquidation, for a new issue of such corporation's common stock having no such rights;

(5) An exchange is made of an amount of a corporation's outstanding

preferred stock with dividends in arrears for other stock of the corporation. However, if pursuant to such an exchange there is an increase in the proportionate interest of the preferred shareholders in the assets or earnings and profits of the corporation, then under § 1.305–7(c)(2), an amount equal to the lesser of (i) the amount by which the fair market value or liquidation preference, whichever is greater, of the stock received in the exchange (determined immediately following the recapitalization) exceeds the issue price of the preferred stock surrendered, or (ii) the amount of the dividends in arrears, shall be treated under section 305(c) as a deemed distribution to which sections 305(b)(4) and 301 apply.

(f) The term *a party to a reorganization* includes a corporation resulting from a reorganization, and both corporations, in a transaction qualifying as a reorganization where one corporation acquires stock or properties of another corporation. If a transaction otherwise qualifies as a reorganization, a corporation remains a party to the reorganization even though stock or assets acquired in the reorganization are transferred in a transaction described in paragraph (k) of this section. If a transaction otherwise qualifies as a reorganization, a corporation shall not cease to be a party to the reorganization solely by reason of the fact that part or all of the assets acquired in the reorganization are transferred to a partnership in which the transferor is a partner if the continuity of business enterprise requirement is satisfied. See § 1.368–1(d). The preceding three sentences apply to transactions occurring after January 28, 1998, except that they do not apply to any transaction occurring pursuant to a written agreement which is binding on January 28, 1998, and at all times thereafter. A corporation controlling an acquiring corporation is a party to the reorganization when the stock of such controlling corporation is used in the acquisition of properties. Both corporations are parties to the reorganization if, under statutory authority, Corporation A is merged into Corporation B. All three of the corporations are parties to the reorganization if, pursuant to statutory authority, Corporation C and Corporation D are consolidated into Corporation E. Both corporations are parties to the reorganization if Corporation F transfers substantially all its assets to Corporation G in exchange for all or a part of the voting stock of Corporation G. All three corporations are parties to the reorganization if Corporation H transfers substantially all its assets to Corporation K in exchange for all or a part of the voting stock of Corporation L, which is in control of Corporation K. Both corporations are parties to the reorganization if Corporation M transfers all or part of its assets to Corporation N in exchange for all or a part of the stock and securities of Corporation N, but only if (1) immediately after such transfer, Corporation M, or one or more of its shareholders (including persons who were shareholders immediately before such transfer), or any combination thereof, is in control of Corporation N, and (2) in pursuance of the plan, the stock and securities of Corporation N are transferred or distributed by Corporation M in a transaction in which gain or loss is not recognized under section 354 or 355, or is recognized only to the extent provided in section 356. Both Corporation O and Corporation P, but not Corporation S, are parties to the reorganization if Corporation O acquires stock of Corporation P from Corporation S in exchange solely for a part of the voting stock of Corporation O, if (1) the stock of Corporation P does not constitute substantially all of the assets of Corporation S, (2) Corporation S is not in control of Corporation O immediately after the acquisition, and (3) Corporation O is in control of Corporation P immediately after the acquisition.

(g) The term *plan of reorganization* has reference to a consummated transaction specifically defined as a reorganization under section 368(a). The term is not to be construed as broadening the definition of *reorganization* as set forth in section 368(a), but is to be taken as limiting the nonrecognition of gain or loss to such exchanges or distributions as are directly a part of the transaction specifically described as a reorganization in section 368(a). Moreover, the transaction, or series of

transactions, embraced in a plan of reorganization must not only come within the specific language of section 368(a), but the readjustments involved in the exchanges or distributions effected in the consummation thereof must be undertaken for reasons germane to the continuance of the business of a corporation a party to the reorganization. Section 368(a) contemplates genuine corporate reorganizations which are designed to effect a readjustment of continuing interests under modified corporate forms.

(h) As used in section 368, as well as in other provisions of the Internal Revenue Code, if the context so requires, the conjunction ''or'' denotes both the conjunctive and the disjunctive, and the singular includes the plural. For example, the provisions of the statute are complied with if ''stock and securities'' are received in exchange as well as if ''stock or securities'' are received.

(i) [Reserved]

(j)(1) This paragraph (j) prescribes rules relating to the application of section 368 (a)(2)(E).

(2) Section 368(a)(2)(E) does not apply to a consolidation.

(3) A transaction otherwise qualifying under section 368(a)(1)(A) is not disqualified by reason of the fact that stock of a corporation (the controlling corporation) which before the merger was in control of the merged corporation is used in the transaction, if the conditions of section 368(a)(2)(E) are satisfied. Those conditions are as follows:

(i) In the transaction, shareholders of the surviving corporation must surrender stock in exchange for voting stock of the controlling corporation. Further, the stock so surrendered must constitute control of the surviving corporation. Control is defined in section 368(c). The amount of stock constituting control is measured immediately before the transaction. For purposes of this subdivision (i), stock in the surviving corporation which is surrendered in the transaction (by any shareholder except the controlling corporation) in exchange for consideration furnished by the surviving corporation (and not by the controlling corporation of the merged corporation) is considered not to be outstanding immediately before the transaction. For effect on ''substantially all'' test of consideration furnished by the surviving corporation, see paragraph (j)(3)(iii) of this section.

(ii) Except as provided in paragraph (k)(2) of this section, the controlling corporation must control the surviving corporation immediately after the transaction.

(iii) After the transaction, except as provided in paragraph (k)(2) of this section, the surviving corporation must hold substantially all of its own properties and substantially all of the properties of the merged corporation (other than stock of the controlling corporation distributed in the transaction). The term *substantially all* has the same meaning as in section 368(a)(1)(C). The ''substantially all'' test applies separately to the merged corporation and to the surviving corporation. In applying the ''substantially all'' test to the surviving corporation, consideration furnished in the transaction by the surviving corporation in exchange for its stock is property of the surviving corporation which it does not hold after the transaction. In applying the ''substantially all'' test to the merged corporation, assets transferred from the controlling corporation to the merged corporation in pursuance of the plan of reorganization are not taken into account. Thus, for example, money transferred from the controlling corporation to the merged corporation to be used for the following purposes is not taken into account for purposes of the ''substantially all'' test:

(A) To pay additional consideration to shareholders of the surviving corporation;

(B) To pay dissenting shareholders of the surviving corporation;

(C) To pay creditors of the surviving corporation;

(D) To pay reorganization expenses; or

(E) To enable the merged corporation to satisfy state minimum capitalization requirements (where the money is returned to the controlling corporation as part of the transaction).

(iv) Paragraphs (j)(3)(ii) and (iii) of this section apply to transactions occurring after January 28, 1998, except that they do not apply to any transaction occurring pursuant to a written

agreement which is binding on January 28, 1998, and at all times thereafter.

(4) The controlling corporation may assume liabilities of the surviving corporation without disqualifying the transaction under section 368(a)(2)(E). An assumption of liabilities of the surviving corporation by the controlling corporation is a contribution to capital by the controlling corporation to the surviving corporation. If, in pursuance of the plan of reorganization, securities of the surviving corporation are exchanged for securities of the controlling corporation, or for other securities of the surviving corporation, see sections 354 and 356.

(5) In applying section 368(a)(2)(E), it makes no difference if the merged corporation is an existing corporation, or is formed immediately before the merger, in anticipation of the merger, or after preliminary steps have been taken to otherwise acquire control of the surviving corporation.

(6) The following examples illustrate the application of this paragraph (j). In each of the examples, Corporation P owns all of the stock of Corporation S and, except as otherwise stated, Corporation T has outstanding 1,000 shares of common stock and no shares of any other class. In each of the examples, it is also assumed that the transaction qualifies under section 368(a)(1)(A) if the conditions of section 368(a)(2)(E) are satisfied.

Example 1. P owns no T stock. On January 1, 1981, S merges into T. In the merger, T's shareholders surrender 950 shares of common stock in exchange for P voting stock. The holders of the other 50 shares (who dissent from the merger) are paid in cash with funds supplied by P. After the transaction, T holds all of its own assets and all of S's assets. Based on these facts, the transaction qualifies under section 368(a)(1)(A) by reason of the application of section 368(a)(2)(E). In the transaction, former shareholders of T surrender, in exchange for P voting stock, an amount of T stock (950/1,000 shares or 95 percent) which constitutes control of T.

Example 2. The facts are the same as in *Example (1)* except that holders of 100 shares in corporation T, who dissented from the merger, are paid in cash with funds supplied by T (and not by P or S) and in the merger, T's remaining shareholders surrender 720 shares of common stock in exchange for P voting stock and 180 shares of common stock for cash supplied by P. The requirements of section 368(a)(2)(E)(ii) are satisfied since, in the transaction, former shareholders of T surrender, in exchange for P voting stock, an amount of T stock (720/900 shares or 80 percent) which constitutes control of T. The T stock surrendered in exchange for consideration furnished by T is not considered outstanding for purposes of determining whether the amount of T stock surrendered by T shareholders for P stock constitutes control of T.

Example 3. T has outstanding 1,000 shares of common stock, 100 shares of nonvoting preferred stock, and no shares of any other class. On January 1, 1981, S merges into T. Prior to the merger, as part of the transaction, T distributes its own cash in redemption of the 100 shares of preferred stock. In the transaction, T's remaining shareholders surrender their 1,000 shares of common stock in exchange for P voting stock. The requirements of section 368(a)(2)(E)(ii) are satisfied since, in the transaction, former shareholders of T surrender, in exchange for P voting stock, an amount of T stock (1,000/1,000 shares or 100 percent) which constitutes control of T. The preferred stock surrendered in exchange for consideration furnished by T is not considered outstanding for purposes of determining whether the amount of T stock surrendered by T shareholders for P stock constitutes control of T. However, the consideration furnished by T for its stock is property of T which T does not hold after the transaction for purposes of the substantially all test in paragraph (j)(3)(iii) of this section.

Example 4. On January 1, 1971, P purchased 201 shares of T's stock. On January 1, 1981, S merges into T. In the merger, T's shareholders (other than P) surrender 799 shares of T stock in exchange for P voting stock. Based on these facts, in the transaction, former shareholders of T do not surrender, in exchange for P voting stock, an amount of T stock which constitutes control of T (799/1,000 shares being less than 80 percent). Therefore, the transaction does not qualify under section 368(a)(1)(A). However, if S is a transitory corporation, formed solely for purposes of effectuating the transaction, the transaction may qualify as a reorganization described in section 368(a)(1)(B) provided all of the applicable requirements are satisfied.

Example 5. On January 1, 1971, P purchased 200 shares of T's stock. On January 1, 1981, S merges into T. Prior to the merger, as part of the transaction, T distributes its own cash in redemption of 1 share of T stock from a T shareholder other than P. In the merger, T's remaining shareholders (other than P) surrender 799 shares of T stock in exchange for P voting stock. Based on these facts, in the transaction, former shareholders of T do not surrender, in exchange for P voting stock, an amount of T stock which constitutes control of T (799/999 shares being less than 80 percent). Therefore, the transaction does not

qualify under section 368(a)(1)(A). However, if S is a transitory corporation, formed for purposes of effectuating the transaction, the transaction may qualify as a reorganization described in section 368(a)(1)(B) provided all of the applicable requirements are satisfied.

Example 6. The stock of S has a value of $25,000. The stock of T has a value of $75,000. On January 1, 1984, S merges into T. In the merger, T's shareholders surrender all of their T stock in exchange for P voting stock. After the transaction, T holds all of its own assets and all of S's assets. Based on these facts, the transaction qualifies under section 368(a)(1)(A) by reason of the application of section 368(a)(2)(E). In the transaction, former shareholders of T surrender, in exchange for P voting stock, an amount of T stock (1,000/1,000 shares or 100 percent) which constitutes control of T. The stock of T received by P in exchange for P's prior interest in S is not taken into account for purposes of section 368(a)(2)(E)(ii) since the amount of T stock constituting control of T is measured before the transaction.

Example 7. The stock of T has a value of $75,000. On January 1, 1984, S merges into T. In the merger, T's shareholders surrender all of their T stock in exchange for P voting stock. As part of the transaction, P contributes $25,000 to T in exchange for new shares of T stock. None of the cash received by T is distributed or otherwise paid out to former T shareholders. After the transaction, T holds all of its own assets and all of S's assets. Based on these facts, the transaction qualifies under section 368(a)(1)(A) by reason of the application of section 368(a)(2)(E). In the transaction, former shareholders of T surrender, in exchange for P voting stock, an amount of T stock (1,000/1,000 shares or 100 percent) which constitutes control of T. The T stock received by P in exchange for its contribution to T is not taken into account for purposes of section 368(a)(2)(E)(ii) since the amount of T stock constituting control of T is measured before the transaction.

Example 8. The facts are the same as in *Example (7)* except that, as part of the transaction, corporation R, instead of P, contributes $25,000 to T in exchange for T stock. Based on these facts, the transaction does not qualify under section 368(a)(1)(A) by reason of section 368(a)(2)(E) since P does not control T immediately after the transaction.

Example 9. T stock has a value of $75,000. P owns 500 shares (½) of that stock with a value of $37,500. The stock of S has a value of $125,000. On January 1, 1984, S merges into T. In the merger, T's shareholders (other than P) surrender their T stock in exchange for P voting stock. Based on these facts, in the transaction, former shareholders of T do not surrender, in exchange for P voting stock, an amount of T stock which constitutes control of T (500/1,000 shares being less than 80 percent). Therefore, the transaction does not qualify under section 368(a)(1)(A). The stock of T received by P in exchange for P's prior interest in S does not contribute to satisfaction of the requirement of section 368(a)(2)(E)(ii).

(k) *Transfer of assets or stock in section 368(a)(1)(A), (B), (C), or (G) reorganizations*—(1) *General rule for transfers to controlled corporations.* Except as otherwise provided in this section, a transaction otherwise qualifying under section 368(a)(1)(A), (B), (C), or (G) (where the requirements of sections 354(b)(1)(A) and (B) are met) shall not be disqualified by reason of the fact that part or all of the acquired assets or stock acquired in the transaction are transferred or successively transferred to one or more corporations controlled in each transfer by the transferor corporation. Control is defined under section 368(c).

(2) *Transfers following a reverse triangular merger.* A transaction qualifying under section 368(a)(1)(A) by reason of the application of section 368(a)(2)(E) is not disqualified by reason of the fact that part or all of the stock of the surviving corporation is transferred or successively transferred to one or more corporations controlled in each transfer by the transferor corporation, or because part or all of the assets of the surviving corporation or the merged corporation are transferred or successively transferred to one or more corporations controlled in each transfer by the transferor corporation.

(3) *Examples.* The following examples illustrate the application of this paragraph (k). P is the issuing corporation and T is the target corporation. P has only one class of stock outstanding. The examples are as follows:

Example 1. Transfers of acquired assets to controlled corporations. (i) *Facts.* T operates a bakery which supplies delectable pastries and cookies to local retail stores. The acquiring corporate group produces a variety of baked goods for nationwide distribution. P owns 80 percent of the stock of S–1. Pursuant to a plan of reorganization, T transfers all of its assets to S–1 solely in exchange for P stock, which T distributes to its shareholders. S–1 owns 80 percent of the stock of S–2; S–2 owns 80 percent of the stock of S–3, which also makes and supplies pastries and cookies. Pursuant to the plan of reorganization, S–1 transfers the T assets to S–2; S–2 transfers the T assets to S–3.

(ii) *Analysis.* Under this paragraph (k), the transaction, otherwise qualifying as a reorganization under section 368(a)(1)(C), is not disqualified by reason of the fact of the successive transfers of all of the acquired assets from S–1 to S–2, and from S–2 to S–3 because in each transfer, the transferee corporation is controlled by the transferor corporation. Control is defined under section 368(c).

Example 2. Transfers of acquired stock to controlled corporations. (i) *Facts.* The facts are the same as Example 1 except that S–1 acquires all of the T stock rather than the T assets, and as part of the plan of reorganization, S–1 transfers all of the T stock to S–2, and S–2 transfers all of the T stock to S–3.

(ii) *Analysis.* Under this paragraph (k), the transaction, otherwise qualifying as a reorganization under section 368(a)(1)(B), is not disqualified by reason of the fact of the successive transfers of all of the acquired stock from S–1 to S–2, and from S–2 to S–3 because in each transfer, the transferee corporation is controlled by the transferor corporation.

Example 3. Transfers of acquired stock to partnerships. (i) *Facts.* The facts are the same as in Example 2. However, as part of the plan of reorganization, S–2 and S–3 form a new partnership, PRS. Immediately thereafter, S–3 transfers all of the T stock to PRS in exchange for an 80 percent partnership interest, and S–2 transfers cash to PRS in exchange for a 20 percent partnership interest.

(ii) *Analysis.* This paragraph (k) describes the successive transfer of the T stock to S–3, but does not describe S–3's transfer of the T stock to PRS. Therefore, the characterization of this transaction must be determined under the relevant provisions of law, including the step transaction doctrine. See § 1.368–1(a). The transaction fails to meet the control requirement of a reorganization described in section 368(a)(1)(B) because immediately after the acquisition of the T stock, the acquiring corporation does not have control of T.

(4) This paragraph (k) applies to transactions occurring after January 28, 1998, except that it does not apply to any transaction occurring pursuant to a written agreement which is binding on January 28, 1998, and at all times thereafter.

[T.D. 6500, 25 FR 11607, Nov. 26, 1960, as amended by T.D. 7281, 38 FR 18540, July 12, 1973; T.D. 7422, 41 FR 26570, June 28, 1976; T.D. 8059, 50 FR 42689, Oct. 22, 1985; 51 FR 6400, Feb. 24, 1986; T.D. 8760, 63 FR 4182, Jan. 28, 1998]

§ 1.368–3 Records to be kept and information to be filed with returns.

(a) The plan of reorganization must be adopted by each of the corporations parties thereto; and the adoption must be shown by the acts of its duly constituted responsible officers, and appear upon the official records of the corporation. Each corporation, a party to a reorganization, shall file as a part of its return for its taxable year within which the reorganization occurred a complete statement of all facts pertinent to the nonrecognition of gain or loss in connection with the reorganization, including:

(1) A copy of the plan of reorganization, together with a statement, executed under the penalties of perjury, showing in full the purposes thereof and in detail all transactions incident to, or pursuant to, the plan.

(2) A complete statement of the cost or other basis of all property, including all stock or securities, transferred incident to the plan.

(3) A statement of the amount of stock or securities and other property or money received from the exchange, including a statement of all distributions or other disposition made thereof. The amount of each kind of stock or securities and other property received shall be stated on the basis of the fair market value thereof at the date of the exchange.

(4) A statement of the amount and nature of any liabilities assumed upon the exchange, and the amount and nature of any liabilities to which any of the property acquired in the exchange is subject.

(b) Every taxpayer, other than a corporation a party to the reorganization, who receives stock or securities and other property or money upon a tax-free exchange in connection with a corporate reorganization shall incorporate in his income tax return for the taxable year in which the exchange takes place a complete statement of all facts pertinent to the nonrecognition of gain or loss upon such exchange including:

(1) A statement of the cost or other basis of the stock or securities transferred in the exchange, and

(2) A statement in full of the amount of stock or securities and other property or money received from the exchange, including any liabilities assumed upon the exchange, and any liabilities to which property received is subject. The amount of each kind of

stock or securities and other property (other than liabilities assumed upon the exchange) received shall be set forth upon the basis of the fair market value thereof at the date of the exchange.

(c) Permanent records in substantial form shall be kept by every taxpayer who participates in a tax-free exchange in connection with a corporate reorganization showing the cost or other basis of the transferred property and the amount of stock or securities and other property or money received (including any liabilities assumed on the exchange, or any liabilities to which any of the properties received were subject), in order to facilitate the determination of gain or loss from a subsequent disposition of such stock or securities and other property received from the exchange.

[T.D. 6500, 25 FR 11607, Nov. 26, 1960, as amended by T.D. 6622, 27 FR 11918, Dec. 4, 1962]

INSOLVENCY REORGANIZATIONS

§ 1.371–1 Exchanges by corporations.

(a) *Exchange solely for stock or securities.* (1) Section 371(a)(1) provides for the nonrecognition of gain or loss by a corporation upon certain exchanges made in connection with the reorganization of an insolvent corporation. The section does not apply to a railroad corporation as defined in section 77(m) of the Bankruptcy Act (11 U.S.C. 205(m)). In order to qualify as a section 371(a) reorganization, the transaction must satisfy the express statutory requirements as well as the underlying assumptions and purposes for which the exchange is excepted from the general rule requiring the recognition of gain or loss upon the exchange of property.

(2) Section 371(a)(1) applies only with respect to a reorganization effected in one of two specified types of court proceedings: (i) Receivership, foreclosure, or similar proceedings, or (ii) corporate reorganization proceedings under chapter X of the Bankruptcy Act (11 U.S.C. 10). The specific statutory requirements are the transfer of property of a corporation, in pursuance of an order of the court having jurisdiction of the corporation in such proceeding, to another corporation organized or made use of to effectuate a plan of reorganization approved by the court in such proceeding, in exchange solely for stock or securities in such other corporation. If the consideration for the transfer consists of other property or money as well as stock and securities, see section 371(a)(2) and (c). As to the assumption of liabilities in an exchange described in section 371(a), see section 371(d).

(3) The application of section 371(a)(1) is to be strictly limited to a transaction of the character set forth in such section. Hence, the section is inapplicable unless there is a bona fide plan of reorganization approved by the court having jurisdiction of the proceeding and the transfer of the property of the insolvent corporation is made pursuant to such plan. It is unnecessary that the transfer be a direct transfer from the insolvent corporation; it is sufficient if the transfer is an integral step in the consummation of the reorganization plan approved by the court. By its terms, the section has no application to a reorganization consummated by adjustment of the capital or debt structure of the insolvent corporation without the transfer of its assets to another corporation.

(4) As used in section 371(a)(1), the term *reorganization* is not controlled by the definition of *reorganization* contained in section 368. However, certain basic requirements, implicit in the statute, which are essential to a reorganization under section 368, are likewise essential to qualify a transaction as a reorganization under section 371(a)(1). Among these requirements are a continuity of the business enterprise under the modified corporate form and a continuity of interest therein on the part of those persons who were the owners of the enterprise prior to the reorganization. Thus, the nonrecognition accorded by section 371(a)(1) applies only to a genuine reorganization as distinguished from a liquidation and sale of property to either new or old interests supplying new capital and discharging the obligations of the old corporation. For the purpose of determining whether the requisite continuity of interest exists, the interest of creditors who have, by appropriate

legal steps, obtained effective command of the property of an insolvent corporation is considered as the equivalent of a proprietary interest. But the mere possibility of a proprietary interest is not its equivalent. In general, any transaction will be subject to nonrecognition of gain or loss as prescribed by section 371(a)(1) where the property is transferred to a corporation and the stock and securities of such corporation are transferred to persons who were shareholders or creditors of the transferor corporation as if such stock or securities had been transferred to such persons as shareholders pursuant to the nonrecognition provisions of part III, subchapter C, chapter 1 of the Code. The determinative and controlling factors are the corporation's insolvency and the effective command by the creditors over its property. The term *insolvent* as used herein refers to insolvency at any time during the course of the proceeding referred to in section 371(a)(1), either in the sense of excess of liabilities over assets or in the sense of inability to meet obligations as they mature.

(5) A short-term purchase money note is not a security within the meaning of this section, and the transfer of the properties of the insolvent corporation for cash and deferred payment obligations of the transferee evidenced by short-term notes is a sale and not an exchange.

(b) *Exchange for stock or securities and other property or money*. If an exchange would be within the provisions of section 371(a)(1) if it were not for the fact that the consideration for the transfer of the property of the insolvent corporation consists not only of stock or securities but also of other property or money, then, as provided in section 371(a)(2), if the other property or money received by the corporation is distributed by it pursuant to the plan of reorganization, no gain to the corporation will be recognized. Property is distributed within the meaning of this section if it is paid over or distributed to shareholders or creditors who have by appropriate legal steps obtained effective command of the property of the corporation. If the other property or money received by the corporation is not distributed by it pursuant to the plan of reorganization, the gain, if any, to the corporation from the exchange will be recognized in an amount not in excess of the sum of money and the fair market value of the other property so received which is not distributed. In either case no loss from the exchange will be recognized (see section 371(c)).

(c) *Records to be kept and information to be filed*. (1) Each corporation a party to a section 371(a) reorganization shall furnish a complete statement of all facts pertinent to the nonrecognition of gain or loss in connection with the exchange, including:

(i) A certified copy of the plan of reorganization approved by the court in the proceeding, together with a statement showing in full the purposes thereof and in detail all transactions incident, or pursuant, to the plan;

(ii) A complete statement of the cost or other basis of all property, including all stock or securities, transferred incident to the plan;

(iii) A statement of the amount of stock or securities and other property or money received in the exchange, including a statement of all distributions or other disposition made thereof. The amount of each kind of stock or securities or other property shall be stated on the basis of the fair market value thereof at the date of the exchange;

(iv) A statement of the amount and nature of any liabilities assumed upon the exchange.

The information required by this section shall be filed as a part of the corporation's return for its taxable year within which the reorganization occurred.

(2) Permanent records in substantial form must be kept by every taxpayer who participates in a tax-free exchange in connection with a corporate reorganization showing the cost or other basis of the transferred property and the amount of stock or securities and other property or money received (including any liabilities assumed upon the exchange), in order to facilitate the determination of gain or loss from a subsequent disposition of such stock or securities and other property received from th securities and other property or money received (including any liabilities assumed upon the exchange), in order to facilitate the determination

of gain or loss from a subsequent disposition of such stock or securities and other property received from the exchange.

§ 1.371–2 Exchanges by security holders.

(a) *In general.* (1) Section 371(b) prescribes the rules relative to the recognition of gain or loss upon certain exchanges made by the holders of stock or securities of an insolvent corporation in connection with a reorganization described in section 371(a). Under section 371(b)(1), no gain or loss shall be recognized if, pursuant to the plan of reorganization, stock or securities in the insolvent corporation are exchanged solely for stock or securities in the corporation organized or made use of to effectuate such plan. If, in addition to such stock or securities, other property or money is received upon such exchange, gain is recognized to the extent of such other property or money (section 371(b)(2)), but no loss is recognized (section 371(c)). As to the basis of the stock or securities or other property acquired upon an exchange under section 371(b), see section 358.

(2) By thus characterizing as an exchange, and regarding as a single taxable event, the event or series of events resulting in the relinquishment or extinguishment of the stock or securities in the old corporation and the acquisition in consideration thereof, in whole or in part, of stock or securities in the new corporation, the Code secures uniformity of treatment for the participating security holders, regardless of the particular steps or the procedural devices by which such exchange is effected. Thus, the transaction which qualified as a reorganization under section 371(a) may take one of several forms. In a typical creditors' reorganization there may be a transfer of the property of the old corporation to its bondholders, or the bondholders' committee, upon surrender of the bonds, followed by the transfer of such property to the new corporation in consideration of stock in the latter; or there may be a transfer of the bonds to the new corporation in exchange for its stocks or securities, followed by the transfer of the property of the old corporation in consideration of the surrender of its bonds. In either event, section 371(b) treats the result to the participating security holders as an exchange of the securities of the old corporation for securities of the new corporation. In order, however, to qualify as an exchange under section 371(b) the various events resulting in the relinquishment or extinguishment of the old securities and the acquisition of the new securities must be embraced within the plan of reorganization and must be undertaken for reasons germane to the plan. If the event, or series of events, qualifies as an exchange under section 371(b), no antecedent event necessarily a component of the relinquishment or extinguishment of the securities of the old corporation in consideration of the acquisition of the securities of the new corporation shall be considered a transaction or event having consequences for income tax purposes.

(b) *Exchange solely for stock or securities.* Section 371(b)(1) provides that no gain or loss shall be recognized upon an exchange consisting of the relinquishment or extinguishment of stock or securities in an insolvent corporation described in section 371(a), in consideration of the acquisition solely of stock or securities in a corporation organized or made use of to effectuate the plan of reorganization. As used in this section, the term security does not include a short-term note.

(c) *Exchanges for stock or securities and other property or money.* If an exchange would be within section 371(b)(1) if it were not for the fact that the property received in the exchange consists not only of stock or securities in the corporation organized or made use of to effectuate the plan of reorganization, but also of other property or money, then

(1) As provided in section 371(b)(2), the gain, if any, to the taxpayer will be recognized in an amount not in excess of the sum of money and the fair market value of the other property. The gain so recognized shall be treated as capital gain.

(2) The loss, if any, to the taxpayer from such an exchange is not to be recognized to any extent (see section 371(c)).

(d) *Records to be kept and information to be filed.* (1) Every taxpayer who receives stock or securities and other property or money upon an exchange described in section 371(b) in connection with a corporate reorganization, must furnish a complete statement of all facts pertinent to the recognition or nonrecognition of gain or loss upon such exchange, including—

(i) A statement of the cost or other basis of the stock or securities transferred in the exchange, and

(ii) A statement in full of the amount of stock or securities and other property or money received from the exchange, including any liability assumed upon the exchange. The amount of each kind of stock or securities and other property (other than liabilities assumed upon the exchange) received shall be set forth upon the basis of the fair market value thereof at the date of the exchange. The statement shall be incorporated in the taxpayer's income tax return for the taxable year in which the exchange occurs.

(2) Permanent records in substantial form shall be kept by every taxpayer who participates in an exchange described in section 371(b), showing the cost or other basis of the transferred property and the amount of stock or securities and other property or money received (including any liabilities assumed upon the exchange), in order to facilitate the determination of gain or loss from a subsequent disposition of such stock or securities and other property received from the exchange.

§ 1.372–1 Corporations.

(a) If, as the result of a transaction described in section 371, so much of section 371(c) as relates to section 371(a), or the corresponding provisions of prior law, the property of an insolvent corporation is transferred, in pursuance of a plan of reorganization, to a corporation organized or made use of to effectuate such plan, the basis of such property in the hands of the acquiring corporation is the same as it would be in the hands of the insolvent corporation, increased in the amount of gain recognized upon such transfer under the law applicable to the year in which the transfer was made. In any such case, the adjustments to basis provided by section 270 of the Bankruptcy Act (11 U.S.C. 670), or section 1017 of the Code, shall not be made in respect of any indebtedness cancelled pursuant to the plan of reorganization under which the transfer was made. If the transaction falls within the provisions of section 372(a), the basis of the property involved shall be determined pursuant to such provisions, notwithstanding that the transaction might otherwise fall within another basis provision.

(b) The provisions of section 372(a) are applicable in the determination of basis for all taxable years beginning after December 31, 1933, except that the basis so determined shall not be given effect in the determination of the tax liability for any taxable year beginning prior to January 1, 1943. With the exception indicated, the basis so prescribed is applicable from the date of acquisition of such property. For example, the provisions of section 1016 relating to adjusted basis shall be applied as if section 372(a) were a part of the Internal Revenue Code of 1939 and prior internal revenue laws applicable to all taxable years beginning after December 31, 1933. Hence, in determining the amount of the adjustments for depreciation, depletion, etc., under the provisions of section 1016(a)(2), the *amount allowable* is the amount computed with reference to the basis provided in section 372(a).

(c) The effect of the application of section 372(a) may be illustrated by the following examples:

Example (1). On January 1, 1935, the Y Corporation, a taxpayer making its returns on the calendar year basis, acquired depreciable property from the X Corporation as the result of a transaction described in section 372(a). On January 1, 1935, the property had, in the hands of the X Corporation, a basis of $200,000, an adjusted basis of $150,000, a fair market value as of January 1, 1935 of $80,000, and an estimated remaining life of 20 years. The 1935 transaction was treated as a taxable exchange and, accordingly, the Y Corporation claimed and was allowed depreciation in the amount of $4,000 for each of the eight taxable years 1935 through 1942, inclusive. For each of the twelve taxable years 1943 through 1954, inclusive, the Y Corporation claimed and was allowed depreciation in the amount of $7,500. On December 31, 1954, the property was sold for $10,000 cash. The amount of the gain realized upon the sale is computed as follows:

Basis to X Corporation		$200,000
Adjustment for depreciation in the hands of X Corporation (sec. 1016)		50,000
Adjusted basis for depreciation in the hands of both X and Y Corporations (sec. 372(b))		150,000
Deduct:		
Depreciation allowable in amount of $7,500 per year (1/20 of $150,000) for 8 years, from Jan. 1, 1935, through Dec. 31, 1942	$60,000	
Depreciation allowable Jan. 1, 1943, to Dec. 31, 1954 (12 years at $7,500)	90,000	
		150,000
Adjusted basis for computing gain or loss		0
Sale price		10,000
Gain realized		10,000

For the taxable year 1943 and succeeding taxable years, the Y Corporation is entitled to deductions for depreciation in respect of such property in the amounts of $7,500 in the determination of its tax liabilities for such years. But no change in the tax liability is authorized for preceding taxable years by reason of the difference between the $7,500 depreciation allowable and the $4,000 deduction previously allowed.

Example (2). Assume the same facts as in *Example (1)*, except that the property acquired by the Y Corporation had a fair market value as of January 1, 1935, of $180,000, instead of $80,000, and the Y Corporation claimed and was allowed depreciation in the amount of $9,000 for each of the eight taxable years 1935 to 1942, inclusive, and in the amount of $6,500 for the taxable years 1943 to 1954, inclusive. In such case, the amount of the gain realized upon the sale of the property would be computed as follows:

Adjusted basis for depreciation in the hands of Y Corporation as computed in *Example (1)*		$150,000
Deduct:		
Depreciation allowed in the amount of $9,000 per year for 8 years Jan. 1, 1935 to Dec. 31, 1942	$72,000	
Depreciation allowable Jan. 1, 1943, to Dec. 31, 1954, inclusive (12 times $6,500)	78,000	
		150,000
Adjusted basis for computing gain or loss		0
Sale price		$10,000
Gain realized		10,000

No change in the tax liability is authorized for taxable years preceding 1943 by reason of the difference between the $7,500 depreciation allowable and the $9,000 deduction previously allowed.

§ 1.374–1 Exchanges by insolvent railroad corporations.

(a) *Exchange solely for stock or securities.* (1) Section 374(a)(1) provides for the nonrecognition of gain or loss by an insolvent railroad corporation upon certain exchanges made in connection with the reorganization of the corporation. In order to qualify as a section 374(a) reorganization, the transaction must satisfy the express statutory requirements as well as the underlying assumptions and purposes for which the exchange is excepted from the general rule requiring the recognition of gain or loss upon the exchange of property.

(2) Section 374(a)(1) applies only with respect to a reorganization effected in one of two specified types of court proceedings: (i) Receivership proceedings, or (ii) proceedings under section 77 of the Bankruptcy Act (11 U.S.C. 205). The specific statutory requirements are the transfer after July 31, 1955, of property of a railroad corporation, as defined in section 77(m) of the Bankruptcy Act (11 U.S.C. 205(m)), in pursuance of an order of the court having jurisdiction of the corporation in such proceeding, to another railroad corporation, as defined in section 77(m) of the Bankruptcy Act, organized or made use of to effectuate a plan of reorganization approved by the court in such proceeding, in exchange solely for stock or securities in such other railroad corporation. If the consideration for the transfer consists of other property or money as well as stock and securities, see section 374(a)(2) and (3) and paragraph (b) of this section. As to the assumption of liabilities in an exchange described in section 374(a), see section 357 and paragraph (a)(1) and (2) of § 1.357–1 and paragraph (a) of § 1.357–2.

(3) The application of section 374(a)(1) is to be strictly limited to a transaction of the character set forth in such section. Hence, the section is inapplicable unless there is a bona fide plan of reorganization approved by the court having jurisdiction of the proceeding and the transfer of the property of the insolvent railroad corporation is made pursuant to such plan. It is unnecessary that the transfer be a direct transfer from the insolvent railroad corporation; it is sufficient if the

transfer is an integral step in the consummation of the reorganization plan approved by the court. By its terms, the section has no application to a reorganization consummated by adjustment of the capital or debt structure of the insolvent railroad corporation without the transfer of its assets to another railroad corporation.

(4) As used in section 374(a)(1), the term *reorganization* is not controlled by the definition of *reorganization* contained in section 368. However, certain basic requirements, implicit in the statute, which are essential to a reorganization under section 368, are likewise essential to qualify a transaction as a reorganization under section 374(a)(1). Among these requirements are a continuity of the business enterprise under the modified corporate form and a continuity of interest therein on the part of those persons who were the owners of the enterprise prior to the reorganization. Thus, the nonrecognition accorded by section 374(a)(1) applies only to a genuine reorganization as distinguished from a liquidation and sale of property to either new or old interests supplying new capital and discharging the obligations of the old railroad corporation. For the purpose of determining whether the requisite continuity of interest exists, the interest of creditors who have, by appropriate legal steps, obtained effective command of the property of an insolvent railroad corporation is considered as the equivalent of a proprietary interest. But the mere possibility of a proprietary interest is not its equivalent. In general, any transaction will be subject to nonrecognition of gain or loss as prescribed by section 374(a)(1) where the property is transferred to a railroad corporation and the stock and securities of such corporation are transferred to persons who were shareholders or creditors of the transferor railroad corporation as if such stock or securities had been transferred to such persons as shareholders pursuant to the nonrecognition provisions of part III, subchapter C, chapter 1 of the Code. The determinative and controlling factors are the railroad corporation's insolvency and the effective command by the creditors over its property. The term *insolvent* as used in this section refers to insolvency at any time during the course of the proceeding referred to in section 374(a)(1), either in the sense of excess of liabilities over assets or in the sense of inability to meet obligations as they mature.

(5) A short-term purchase money note is not a security within the meaning of this section, and the transfer of the properties of the insolvent railroad corporation for cash and deferred payment obligations of the transferee evidenced by short-term notes is a sale and not an exchange.

(b) *Exchange for stock or securities and other property or money*. If an exchange would be within the provisions of section 374(a)(1) if it were not for the fact that the consideration for the transfer of the property of the insolvent railroad corporation consists not only of stock or securities but also of other property or money, then, as provided in section 374(a)(2), if the other property or money received by the railroad corporation is distributed by it pursuant to the plan of reorganization, no gain to the railroad corporation will be recognized. Property is distributed within the meaning of this section if it is paid over or distributed to shareholders or creditors who have by appropriate legal steps obtained effective command of the property of the railroad corporation. If the other property or money received by the railroad corporation is not distributed by it pursuant to the plan of reorganization, the gain, if any, to the railroad corporation from the exchange will be recognized in an amount not in excess of the sum of money and the fair market value of the other property so received which is not distributed. In either case no loss from the exchange will be recognized (see section 374(a)(3)). See section 354(c) relative to exchanges by stock or security holders.

[T.D. 6528, 26 FR 400, Jan. 19, 1961]

§ 1.374–2 Basis of property acquired after December 31, 1938, by railroad corporation in a receivership or railroad reorganization proceeding.

Section 374(b)(1) provides that if property of a railroad corporation, as defined in section 77(m) of the Bankruptcy Act (11 U.S.C. 205(m)), was acquired after July 31, 1955, in pursuance

of an order of the court having jurisdiction of such corporation in either a receivership proceeding or a proceeding under section 77 of the Bankruptcy Act, and the acquiring corporation is also a railroad corporation as defined in section 77(m) of such Act, organized or availed of to effectuate a plan of reorganization approved by the court in such proceeding, the basis shall be the same as it would be in the hands of the transferor railroad corporation, increased in the amount of gain recognized to the transferor under section 374(a)(2) and paragraph (b) of § 1.374–1. For purposes of section 374(b)(1), it is unnecessary that the acquisition in question be a direct transfer from the corporation undergoing reorganization or that such reorganization constitute a reorganization within the meaning of section 368(a) since that section does not apply to part IV, subchapter C, chapter 1 of the Code. It is sufficient if the acquisition is in pursuance of an order of the court and is an integral step in the consummation of a reorganization plan approved by the court having jurisdiction of the proceeding. If the transaction falls within the provisions of section 374(b)(1), the basis of the property involved shall be determined pursuant to such provisions, notwithstanding that the transaction might also fall within another basis provision.

[T.D. 6528, 26 FR 401, Jan. 19, 1961, as amended by T.D. 7616, 44 FR 26870, May 8, 1979]

§ 1.374–3 Records to be kept and information to be filed.

(a) *Return information.* Each railroad corporation a party to a section 374(a) reorganization shall furnish a complete statement of all facts pertinent to the recognition or nonrecognition of gain or loss in connection with the exchange, including:

(1) A certified copy of the plan of reorganization approved by the court in the proceeding, together with a statement showing in full the purposes thereof and in detail all transactions incident, or pursuant, to the plan;

(2) A complete statement of the cost or other basis of all property, including all stock or securities, transferred incident to the plan;

(3) A statement of the amount of stock or securities and other property or money received in the exchange, including a statement of all distributions or other disposition made thereof. The amount of each kind of stock or securities or other property shall be stated on the basis of the fair market value thereof at the date of the exchange;

(4) A statement of the amount and nature of any liabilities assumed upon the exchange.

The information required by this paragraph shall be filed as a part of each railroad corporation's return for its taxable year within which the reorganization occurred.

(b) *Permanent records.* Permanent records in substantial form must be kept by every railroad corporation which participates in a tax-free exchange in connection with a section 374(a) reorganization showing the cost or other basis of the transferred property and the amount of stock or securities and other property or money received (including any liabilities assumed upon the exchange), in order to facilitate the determination of gain or loss from a subsequent disposition of such stock or securities and other property received from the exchange.

[T.D. 6528, 26 FR 401, Jan. 19, 1961]

§ 1.374–4 Property acquired by electric railway corporation in corporate reorganizing proceeding.

Subject to the limitations and conditions set forth in section 374(b)(2), if the reorganization under section 77 of the Bankruptcy Act (11 U.S.C. 501 and following) of an electric railway corporation results in the acquisition of the property of such corporation by another corporation, the basis of such property in the hands of the acquiring corporation is the same as it would be in the hands of the old corporation. It is requisite to the application of the section that both corporations be street, suburban, or interurban electric railway corporations engaged in the transportation of persons or property in interstate commerce, and that the acquisition is in pursuance of an order of the court and is an integral step in the consummation of a reorgnizing plan approved by the court having

jurisidiction of the proceeding. If section 374(b)(2) applies, section 270 of the Bankruptcy Act (11 U.S.C. 670), relating to the adjustment of basis by reason of the cancellation or reduction of indebtedness in a corporate reorganization proceeding, is inapplicable. Moreover, if the transaction is within the provisons of section 374(b)(2) and may also be considered to be within any other basis provision, then the provisions of section 374(b)(2) only shall apply.

[T.D. 7616, 44 FR 26870, May 8, 1979]

CARRYOVERS

§ 1.381(a)–1 General rule relating to carryovers in certain corporate acquisitions.

(a) *Allowance of carryovers.* Section 381 provides that a corporation which acquires the assets of another corporation in certain liquidations and reorganizations shall succeed to, and take into account, as of the close of the date of distribution or transfer, the items described in section 381(c) of the distributor or transferor corporation. These items shall be taken into account by the acquiring corporation subject to the conditions and limitations specified in sections 381, 382(b), and 383 and the regulations thereunder.

(b) *Determination of transactions and items to which section 381 applies*—(1) *Qualified transactions.* Except to the extent provided in section 381(c)(20), relating to the carryover of unused pension trust deductions in certain liquidations, the items described in section 381(c) are required by section 381 to be carried over to the acquiring corporation (as defined in subparagraph (2) of this paragraph) only in the following liquidations and reorganizations:

(i) The complete liquidation of a subsidiary corporation upon which no gain or loss is recognized in accordance with the provisions of section 332, but only if the basis of the assets distributed to the acquiring corporation is not required by section 334(b)(2) to be the adjusted basis of the stock with respect to which the distribution is made;

(ii) A statutory merger or consolidation qualifying under section 368(a)(1)(A) to which section 361 applies;

(iii) A reorganization qualifying under section 368(a)(1)(C);

(iv) A reorganization qualifying under section 368(a)(1)(D) if the requirements of section 354(b)(1)(A) and (B) are satisfied; and

(v) A mere change in identity, form, or place of organization qualifying under section 368(a)(1)(F).

(2) *Acquiring corporation defined.* (i) Only a single corporation may be an acquiring corporation for purposes of section 381 and the regulations thereunder. The corporation which acquires the assets of its subsidiary corporation in a complete liquidation to which section 381(a)(1) applies is the acquiring corporation for purposes of section 381. Generally, in a transaction to which section 381(a)(2) applies, the acquiring corporation is that corporation which, pursuant to the plan of reorganization, ultimately acquires, directly or indirectly, all of the assets transferred by the transferor corporation. If, in a transaction qualifying under section 381(a)(2), no one corporation ultimately acquires all of the assets transferred by the transferor corporation, that corporation which directly acquires the assets so transferred shall be the acquiring corporation for purposes of section 381 and the regulations thereunder, even though such corporation ultimately retains none of the assets so transferred. Whether a corporation has acquired all of the assets transferred by the transferor corporation is a question of fact to be determined on the basis of all the facts and circumstances.

(ii) The application of this subparagraph may be illustrated by the following examples:

Example (1). Y Corporation, a wholly-owned subsidiary of X Corporation, directly acquired all the assets of Z Corporation solely in exchange for voting stock of X Corporation in a transaction qualifying under section 368(a)(1)(C). Y Corporation is the acquiring corporation for purposes of section 381.

Example (2). X Corporation acquired all the assets of Z Corporation solely in exchange for voting stock of X Corporation in a transaction qualifying under section 368(a)(1)(C). Thereafter, pursuant to the plan of reorganization X Corporation transferred all the assets so acquired to Y Corporation, its wholly-owned subsidiary (see section 368(a)(2)(C)). Y Corporation is the acquiring corporation for purposes of section 381.

Example (3). X Corporation acquired all the assets of Z Corporation solely in exchange for the voting stock of X Corporation in a transaction qualifying under section 368(a)(1)(C). Thereafter, pursuant to the plan of reorganization X Corporation transferred one-half of the assets so acquired to Y Corporation, its wholly-owned subsidiary, and retained the other half of such assets. X Corporation is the acquiring corporation for purposes of section 381.

Example (4). X Corporation acquired all the assets of Z Corporation solely in exchange for voting stock of X Corporation in a transaction qualifying under section 368(a)(1)(C). Thereafter, pursuant to the plan of reorganization X Corporation transferred one-half of the assets so acquired to Y Corporation, its wholly-owned subsidiary, and the other half of such assets to M Corporation, another wholly-owned subsidiary of X Corporation. X Corporation is the acquiring corporation for purposes of section 381.

(3) *Transactions and items not covered by section 381.* (i) Section 381 does not apply to partial liquidations, divisive reorganizations, or other transactions not described in subparagraph (1) of this paragraph. Moreover, section 381 does not apply to the carryover of an item or tax attribute not specified in subsection (c) thereof. In a case where section 381 does not apply to a transaction, item, or tax attribute by reason of either of the preceding sentences, no inference is to be drawn from the provisions of section 381 as to whether any item or tax attribute shall be taken into account by the successor corporation.

(ii) If, pursuant to the provisions of subparagraph (2) of this paragraph, a corporation is considered to be the acquiring corporation even though a part of the acquired assets is transferred to one or more corporations controlled by the acquiring corporation, or all the acquired assets are transferred to two or more corporations controlled by the acquiring corporation, then the carryover of any item described in section 381(c) to such controlled corporation or corporations shall be determined without regard to section 381. Thus, for example, if a parent corporation is the acquiring corporation for purposes of section 381 notwithstanding the fact that, pursuant to the plan of reorganization, it transferred to its wholly-owned subsidiary property acquired from the transferor corporation which the transferor corporation had elected to inventory under the last-in first-out method, then the question whether the subsidiary corporation shall continue to use the same method of inventorying with respect to that property shall be determined without regard to section 381.

(c) *Foreign corporations.* A foreign corporation may be a distributor, transferor, or acquiring corporation for purposes of section 381. Thus, for example, the net operating loss carryovers of a foreign corporation, determined under the provisions of section 172 and subchapter N (section 861 and following), chapter 1 of the Code, may be carried over to a domestic acquiring corporation if the domestic corporation acquires the assets of the foreign corporation in a liquidation or reorganization described in section 381(a) and the requirements of §1.367–1, if applicable, have been complied with.

(d) *Internal Revenue Code of 1939.* Any reference in the regulations under section 381 to any provision of the Internal Revenue Code of 1954 shall, where appropriate, be deemed also to refer to the corresponding provision of the Internal Revenue Code of 1939.

[T.D. 6500, 25 FR 11607, Nov. 26, 1960, as amended by T.D. 7343, 40 FR 1698, Jan. 9, 1975]

§1.381(b)–1 Operating rules applicable to carryovers in certain corporate acquisitions.

(a) *Closing of taxable year*—(1) *In general.* Except in the case of certain reorganizations qualifying under section 368(a)(1)(F), the taxable year of the distributor or transferor corporation shall end with the close of the date of distribution or transfer. With regard to the closing of the taxable year of the transferor corporation in certain reorganizations under section 368(a)(1)(F) involving a foreign corporation after December 31, 1986, see §§1.367(a)–1T(e) and 7.367(b)–(e).

(2) *Reorganizations under section 368(a)(1)(F).* In the case of a reorganization qualifying under section 368(a)(1)(F) (whether or not such reorganization also qualifies under any other provision of section 368(a)(1)), the acquiring corporation shall be treated (for purposes of section 381) just as the transferor corporation would have been

treated if there had been no reorganization. Thus, the taxable year of the transferor corporation shall not end on the date of transfer merely because of the transfer; a net operating loss of the acquiring corporation for any taxable year ending after the date of transfer shall be carried back in accordance with section 172(b) in computing the taxable income of the transferor corporation for a taxable year ending before the date of transfer; and the tax attributes of the transferor corporation enumerated in section 381(c) shall be taken into account by the acquiring corporation as if there had been no reorganization.

(b) *Date of distribution or transfer.* (1) The date of distribution or transfer shall be that day on which are distributed or transferred all those properties of the distributor or transferor corporation which are to be distributed or transferred pursuant to a liquidation or reorganization described in paragraph (b)(1) of § 1.381(a)–1. If the distribution or transfer of all such properties is not made on one day, then, except as provided in subparagraph (2) of this paragraph, the date of distribution or transfer shall be that day on which the distribution or transfer of all such properties is completed.

(2) If the distributor or transferor and acquiring corporations file the statements described in subparagraph (3) of this paragraph, the date of distribution or transfer shall be that day as of which (i) substantially all of the properties to be distributed or transferred have been distributed or transferred, and (ii) the distributor or transferor corporation has ceased all operations (other than liquidating activities). Such day also shall be the date of distribution or transfer if the completion of the distribution or transfer is unreasonably postponed beyond the date as of which substantially all the properties to be distributed or transferred have been distributed or transferred and the distributor or transferor corporation has ceased all operations other than liquidating activities. A corporation shall be considered to have distributed or transferred substantially all of its properties to be distributed or transferred even though it retains money or other property in a reasonable amount to pay outstanding debts or preserve the corporation's legal existence. A corporation shall be considered to have ceased all operations, other than liquidating activities, when it ceases to be a going concern and its activities are merely for the purpose of winding up its affairs, paying its debts, and distributing any remaining balance of its money or other properties to its shareholders.

(3) The statements referred to in subparagraph (2) of this paragraph shall specify the day considered to be the date of distribution or transfer and shall specify, as of such date (i) the nature and amount of the total assets which were distributed or transferred and the dates so distributed or transferred, (ii) the nature and amount of the assets not distributed or transferred and the purpose for which they were retained, and (iii) the date on which the distributor or transferor corporation ceased all operations other than liquidating activities. Such statements shall be attached to the timely filed income tax return of the distributor or transferor corporation for its taxable year ending with such date of distribution or transfer and to the timely filed income tax return of the acquiring corporation for its first taxable year ending after such date, except that, with respect to any income tax return filed before October 11, 1960, any such statement shall be filed before October 11, 1960, with the district director with whom such return is filed.

(4) If—

(i) The last day of the acquiring corporation's taxable year is a Saturday, Sunday, or legal holiday, and

(ii) The day specified in subparagraph (1) or (2) of this paragraph as the date of distribution or transfer is the last business day before such Saturday, Sunday, or holiday,

then the last day of the acquiring corporation's taxable year shall be the date of distribution or transfer for purposes of section 381(b) and this section. For purposes of this subparagraph, the term *business day* means a day which is not a Saturday, Sunday, or legal holiday, and also means a Saturday, Sunday, or legal holiday if the date of distribution or transfer determined under

subparagraph (1) or (2) of this paragraph is such Saturday, Sunday, or holiday.

(c) *Return of distributor or transferor corporation.* The distributor or transferor corporation shall file an income tax return for the taxable year ending with the date of distribution or transfer described in paragraph (b) of this section. If the distributor or transferor corporation remains in existence after such date of distribution or transfer, it shall file an income tax return for the taxable year beginning on the day following the date of distribution or transfer and ending with the date on which the distributor or transferor corporation's taxable year would have ended if there had been no distribution or transfer.

(d) *Carryback of net operating losses.* For provisions relating to the carryback of net operating losses of the acquiring corporation, see paragraph (b) of § 1.381(c)(1)–1.

[T.D. 6500, 25 FR 11607, Nov. 26, 1960, as amended at T.D. 8280, 55 FR 1417, Jan. 16, 1990]

§ 1.381(c)(1)–1 Net operating loss carryovers in certain corporate acquisitions.

(a) *Carryover requirement.* (1) Section 381(c)(1) requires the acquiring corporation to succeed to, and take into account, the net operating loss carryovers of the distributor or transferor corporation. To determine the amount of these carryovers as of the close of the date of distribution or transfer, and to integrate them with any carryovers and carrybacks of the acquiring corporation for purposes of determining the taxable income of the acquiring corporation for taxable years ending after the date of distribution or transfer, it is necessary to apply the provisions of section 172 in accordance with the conditions and limitations of section 381(c)(1) and this section. See also section 382(b) and the regulations thereunder.

(2) The net operating loss carryovers and carrybacks of the acquiring corporation determined as of the close of the date of distribution or transfer shall be computed without reference to any net operating loss of a distributor or transferor corporation. The net operating loss carryovers of a distributor or transferor corporation as of the close of the date of distribution or transfer shall be determined without reference to any net operating loss of the acquiring corporation.

(3) For purposes of the tax imposed under section 56, the acquiring corporation succeeding to and taking into account any net operating loss carryovers of the distributor or transferor corporation shall also succeed to and take into account along with such net operating loss carryforward any deferred tax liability under section 56(b) and the regulations thereunder attributable to such net operating loss carryover.

(b) *Carryback of net operating losses.* A net operating loss of the acquiring corporation for any taxable year ending after the date of distribution or transfer shall not be carried back in computing the taxable income of a distributor or transferor corporation. However, a net operating loss of the acquiring corporation for any such taxable year shall be carried back in accordance with section 172(b) in computing the taxable income of the acquiring corporation for a taxable year ending on or before the date of distribution or transfer. If a distributor or transferor corporation remains in existence after the date of distribution or transfer, a net operating loss sustained by it for any taxable year beginning after such date shall be carried back in accordance with section 172(b) in computing the taxable income of such corporation for a taxable year ending on or before that date, but may not be carried back or over in computing the taxable income of the acquiring corporation. This paragraph may be illustrated by the following examples:

Example (1). On December 31, 1954, X Corporation merged into Y Corporation in a statutory merger to which section 361 applies, and the charter of Y Corporation continued after the merger. Y Corporation sustained a net operating loss for the calendar year 1955. Y Corporation's net operating loss for 1955 may not be carried back in computing the taxable income of X Corporation but shall be carried back in computing the taxable income of Y Corporation.

Example (2). On December 31, 1954, X Corporation and Y Corporation transferred all their assets to Z Corporation in a statutory

consolidation to which section 361 applies. Z Corporation sustained a net operating loss for the calendar year 1955. Z Corporation's net operating loss for 1955 may not be carried back in computing the taxable income of X Corporation or Y Corporation.

Example (3). On December 31, 1954, X Corporation ceased all operations (other than liquidating activities) and transferred substantially all its properties to Y Corporation in a reorganization qualifying under section 368(a)(1)(C). Such properties comprised all of X Corporation's properties which were to be transferred pursuant to the reorganization. In the process of liquidating its assets and winding up its affairs, X Corporation sustained a net operating loss for its taxable year beginning on January 1, 1955. This net operating loss of X Corporation shall be carried back in computing the taxable income of that corporation but may not be carried back or over in computing the taxable income of Y Corporation.

(c) *First taxable year to which carryovers apply.* (1) The net operating loss carryovers available to the distributor or transferor corporation as of the close of the date of distribution or transfer shall first be carried to the first taxable year of the acquiring corporation ending after that date. This rule applies irrespective of whether the date of distribution or transfer is on the last day, or any other day, of the acquiring corporation's taxable year. Thus, such net operating loss carryovers shall first be used by the acquiring corporation with respect to the computation of its net operating loss deduction under section 172(a), and its taxable income determined under the provisions of section 172(b)(2), for such first taxable year. However, see paragraph (f) of this section.

(2) The net operating loss carryovers available to the distributor or transferor corporation as of the close of the date of distribution or transfer shall be carried to the acquiring corporation without diminution by reason of the fact that the acquiring corporation does not acquire 100 percent of the assets of the distributor or transferor corporation. Thus, if a parent corporation owning 80 percent of all classes of stock of its subsidiary corporation were to acquire its share of the assets of the subsidiary corporation upon a complete liquidation described in paragraph (b)(1)(i) of § 1.381(a)–1, then, subject to the conditions and limitations of this section, 100 percent of the net operating loss carryovers available to the subsidiary corporation as of the close of the date of distribution would be carried over to the parent corporation.

(d) *Limitation on net operating loss deduction for first taxable year ending after date of distribution or transfer.* (1) That part of the acquiring corporation's net operating loss deduction, determined in accordance with sections 172(a) and 381(c)(1), for its first taxable year ending after the date of distribution or transfer which is attributable to the net operating loss carryovers of the distributor or transferor corporation, is limited by section 381(c)(1)(B) and this paragraph to an amount equal to the acquiring corporation's postacquisition part year taxable income. Such postacquisition part year taxable income is the amount which bears the same ratio to the acquiring corporation's taxable income for the first taxable year ending after the date of distribution or transfer (determined under section 63 without regard to any net operating loss deduction but taking into account other items to which the acquiring corporation succeeds under section 381) as the number of days in such first taxable year which follow the date of distribution or transfer bears to the total number of days in such taxable year. Thus, if the date of distribution or transfer is the last day of the acquiring corporation's taxable year, the net operating loss carryovers of the distributor or transferor are allowed in full in computing under section 172(a) the net operating loss deduction of the acquiring corporation for its first taxable year ending after that date. In such instance, the number of days in the first taxable year which follow the date of distribution or transfer is the total number of days in such taxable year.

(2) The limitation provided by section 381(c)(1)(B) applies solely for the purpose of computing the net operating loss deduction of the acquiring corporation under section 172(a) for the acquiring corporation's first taxable year ending after the date of distribution or transfer. The limitation does not apply for purposes of determining the portion of any net operating loss

(whether of the distributor, transferor, or acquiring corporation) which may be carried to any taxable year of the acquiring corporation following its first taxable year ending after the date of distribution or transfer since such determination is made pursuant to section 172(b) and section 381(c)(1)(C). See paragraphs (e) and (f) of this section.

(3) The limitation provided by section 381(c)(1)(B) shall be applied to the aggregate of the allowable net operating loss carryovers of the distributor or transferor corporation without reference to the taxable years in which the net operating losses were sustained by such corporation. If the acquiring corporation has acquired the assets of two or more distributor or transferor corporations on the same date of distribution or transfer, then the limitation provided by section 381(c)(1)(B) shall be applied to the aggregate of the net operating loss carryovers from all of such distributor or transferor corporations.

(4) If the acquiring corporation succeeds to the net operating loss carryovers of two or more distributor or transferor corporations on two or more different dates of distribution or transfer within one taxable year of the acquiring corporation, the limitation to be applied under section 381(c)(1)(B) to the aggregate of such carryovers shall be governed by the rules prescribed in paragraph (b) of § 1.381(c)(1)–2.

(5) *Illustrations.* The application of this paragraph may be illustrated by the following examples:

Example (1). (i) X Corporation and Y Corporation were organized on January 1, 1956, and make their returns on the calendar year basis. On December 16, 1957, X Corporation transferred all its assets to Y Corporation in a statutory merger to which section 361 applies. The net operating losses and taxable income (computed without the net operating loss deduction) of the two corporations are as follows, the assumption being made that none of the modifications specified in section 172(b)(2)(A) apply to any taxable year:

Taxable year	X Corporation (transferor)	Y Corporation (acquirer)
1956	($35,000)	($5,000)
Ending 12–16–57	(30,000)	xxx
1957	xxx	36,500

(ii) The aggregate of the net operating loss carryovers of X Corporation carried under section 381(c)(1)(A) to Y Corporation's taxable year ending December 31, 1957, is $65,000; but pursuant to section 381(c)(1)(B), only $1,500 of such aggregate amount ($36,500× 15/365) may be used in computing the net operating loss deduction of Y Corporation for such taxable year under section 172(a). This limitation applies even though Y Corporation's own net operating loss carryover to such year is only $5,000, with the result that Y Corporation has taxable income under section 63 of $30,000 for its taxable year ending December 31, 1957, that is, $36,500 less the sum of $5,000 and $1,500.

(iii) For rules determining the portion of any given loss of X Corporation or Y Corporation which may be carried to a taxable year of Y Corporation following its taxable year ending December 31, 1957, see sections 172(b)(2) and 381(c)(1)(C) and paragraph (f) of this section.

Example (2). (i) X Corporation was organized on January 1, 1954, and Y Corporation was organized on January 1, 1956. Each corporation makes its return on the basis of the calendar year. On December 31, 1956, X Corporation transferred all its assets to Y Corporation in a statutory merger to which section 361 applies. The net operating losses and the taxable income (computed without any net operating loss deduction) of the two corporations are as follows, the assumption being made that none of the modifications specified in section 172(b)(2)(A) apply to any taxable year:

Taxable year	X Corporation (transferor)	Y Corporation (acquirer)
1954	($5,000)	xxx
1955	(15,000)	xxx
1956	(10,000)	$20,000
1957	xxx	40,000

(ii) The aggregate of the net operating loss carryovers of X Corporation carried under section 381(c)(1)(A) to Y Corporation's taxable year 1957 is $30,000, and the full amount of such carryovers is allowed in such taxable year to Y Corporation as a deduction under section 172(a), since such amount does not exceed the limitation ($40,000× 365/365) for such taxable year under section 381(c)(1)(B).

Example (3). (i) X Corporation, Y Corporation, and Z Corporation were organized on January 1, 1954, and each corporation makes its return on the basis of the calendar year. On September 30, 1956, X Corporation and Y Corporation transferred all their assets to Z Corporation in a statutory merger to which section 361 applies. The net operating losses and the taxable income (computed without any net operating loss deduction) of the

three corporations are as follows, the assumption being made that none of the modifications specified in section 172(b)(2)(A) apply to any taxable year:

Taxable year	X Corporation (transferor)	Y Corporation (transferor)	Z Corporation (acquirer)
1954	($5,000)	($3,000)	($40,000)
1955	(4,000)	(2,000)	10,000
Ending 9–30–56	(1,000)	(9,000)	xxx
1956	xxx	xxx	73,200

(ii) The aggregate of the net operating loss carryovers of X Corporation and Y Corporation carried under section 381(c)(1)(A) to Z Corporation's taxable year 1956 is $24,000; but, pursuant to section 381(c)(1)(B), only $18,400 of such aggregate amount ($73,200× 92/366) may be used in computing the net operating loss deduction of Z Corporation for such taxable year under section 172(a). For this purpose, Z Corporation may not use the total of the aggregate carryovers ($10,000) from X Corporation plus the aggregate carryovers ($14,000) from Y Corporation, even though each such aggregate of carryovers is separately less than the limitation ($18,400) applicable under section 381(c)(1)(B) and this section.

(iii) For rules determining the portion of any given loss of X Corporation, Y Corporation, or Z Corporation which may be carried to a taxable year of Z Corporation following its taxable year ending December 31, 1956, see sections 172(b)(2) and 381(c)(1)(C) and paragraph (f) of this section.

(e) *Computation of carryovers and carrybacks; general rule*—(1) *Sequence for applying losses and computation of taxable income.* The portion of any net operating loss which is carried back or carried over to any taxable year is the excess, if any, of the amount of the loss over the sum of the taxable income for each of the prior taxable years to which the loss may be carried under sections 172(b)(1) and 381. In determining the taxable income for each such prior taxable year for this purpose, the various net operating loss carryovers and carrybacks to such prior taxable year are considered to be applied in reduction of the taxable income in the order of the taxable years in which the net operating losses are sustained, beginning with the loss for the earliest taxable year. The application of this rule to the taxable income of the acquiring corporation for any taxable year ending after the date of distribution or transfer involves the use of carryovers of the distributor or transfer corporation, and of carryovers and carrybacks of the acquiring corporation. In such instance, the sequence for the use of loss years remains the same, and the requirement is to begin with the net operating loss of the earliest taxable year, whether or not it is a loss of the distributor, transferor, or acquiring corporation. The taxable income of the acquiring corporation for any taxable year ending after the date of distribution or transfer shall be determined in the manner prescribed by section 172(b)(2), except that, if the date of distribution or transfer is on a day other than the last day of a taxable year of the acquiring corporation, the taxable income of such corporation for the taxable year which includes such date shall be computed in the special manner prescribed by section 381(c)(1)(C) and paragraph (f) of this section.

(2) *Loss year of transferor or distributor considered prior taxable year.* Section 381(c)(1)(C) provides that, for the purpose of determining the net operating loss carryovers under section 172(b)(2), a net operating loss for a loss year of a distributor or transferor corporation which ends on or before the last day of a loss year of the acquiring corporation shall be considered to be a net operating loss for a year prior to such loss year of the acquiring corporation. In a case where the acquiring corporation has acquired the assets of two or more distributor or transferor corporations on the same date of distribution or transfer, the loss years of the distributor or transferor corporations shall be taken into account in the order in which such loss years terminate; if any one of the loss years of a distributor or transferor corporation ends on the same day as the loss year of another distributor or transferor corporation, either loss year may be taken into account before the other.

(3) *Years to which losses may be carried.* The taxable years to which a net operating loss shall be carried back or carried over are prescribed by section 172(b)(1). Since the taxable year of the distributor or transferor corporation ends with the close of the date of distribution or transfer, such taxable year and the first taxable year of the acquiring corporation which ends after that

date shall be considered two separate taxable years to which a net operating loss of the distributor or transferor corporation for any taxable year ending before that date may be carried over. This rule applies even though the taxable year of the distributor or transferor corporation which ends on the date of distribution or transfer is a period of less than twelve months. However, for the purpose of determining under section 172(b)(1) the taxable years to which a net operating loss of the acquiring corporation is carried over or carried back, the first taxable year of the acquiring corporation which ends after the date of distribution or transfer shall be treated as only one taxable year even though such taxable year is considered under section 381(c)(1)(C) and paragraph (f)(2) of this section as two taxable years. The application of this subparagraph may be illustrated by the following example:

Example. X Corporation was organized on January 1, 1954, and thereafter it sustained net operating losses in its calendar years 1954, 1955, and 1956. On June 30, 1957, X Corporation transferred all its assets to Y Corporation, which was organized on January 1, 1955, in a statutory merger to which section 361 applies. In its taxable year ending June 30, 1957, X Corporation sustained a net operating loss. Y Corporation sustained net operating losses in its calendar years 1955, 1956, and 1958, but had taxable income for the year 1957. The years to which these losses of X Corporation and Y Corporation shall be carried, and the sequence in which carried, are as follows:

Loss year	
X 1954	X 1955, X 1956, X 6/30/57, Y 1957, Y 1958.
X 1955	X 1954, X 1956, X 6/30/57, Y 1957, Y 1958, Y 1959.
Y 1955	Y 1956, Y 1957, Y 1958, Y 1959, Y 1960.
X 1956	X 1954, X 1955, X 6/30/57, Y 1957, Y 1958, Y 1959, Y 1960.
Y 1956	Y 1955, Y 1957, Y 1958, Y 1959, Y 1960, Y 1961.
X 6–30–57	X 1955, X 1956, Y 1957, Y 1958, Y 1959, Y 1960, Y 1961.
Y 1958	Y 1955, Y 1956, Y 1957, Y 1959, Y 1960, Y 1961, Y 1962, Y 1963.

(4) *Computation of carryovers in a case where the date of distribution or transfer occurs on last day of acquiring corporation's taxable year.* The computation of the net operating loss carryovers from the distributor or transferor corporation and from the acquiring corporation in a case where the date of distribution or transfer occurs on the last day of a taxable year of the acquiring corporation may be illustrated by the following example:

Example. X Corporation and Y Corporation were organized on January 1, 1955, and each corporation makes its return on the basis of the calendar year. On December 31, 1956, X Corporation transferred all its assets to Y Corporation in a statutory merger to which section 361 applies. The net operating losses and the taxable income (computed without any net operating loss deduction) of the two corporations are as follows, the assumption being made that none of the modifications specified in section 172(b)(2)(A) apply to any taxable year:

Taxable year	X Corporation (transferor)	Y Corporation (acquirer)
1955	($2,000)	($11,000)
1956	(3,000)	10,000
1957	xxx	(15,000)

The sequence in which the losses of X Corporation and Y Corporation are applied, and the computation of the carryovers to Y Corporation's calendar year 1958, may be illustrated as follows:

(i) *X Corporation's 1955 loss.* The carryover to 1958 is $2,000, computed as follows:

Net operating loss		$2,000
Less:		
X's 1956 taxable income	0	
Y's 1957 taxable income	0	
		0
Carryover		2,000

(ii) *Y Corporation's 1955 loss.* The carryover to 1958 is $1,000, computed as follows:

Net operating loss		$11,000
Less:		
Y's 1956 taxable income	$10,000	
Y's 1957 taxable income	0	
		10,000
Carryover		1,000

(iii) *X Corporation's 1956 loss.* The carryover to 1958 is $3,000, computed as follows:

Net operating loss		$3,000
Less:		
X's 1955 taxable income	0	
Y's 1957 taxable income	0	
		0
Carryover		3,000

(iv) *Y Corporation's 1957 loss.* The carryover to 1958 is $15,000, computed as follows:

Net operating loss			$15,000
Less:			
Y's 1955 taxable income		0	
Y's 1956 taxable income before net operating loss deduction	$10,000		
Minus Y's 1956 net operating loss deduction (i.e., Y's 1955 carryover)	11,000	0	
		0	
Carryover			15,000

(v) *Summary of carryovers to 1958.* The aggregate of the net operating loss carryovers to 1958 is $21,000, computed as follows:

X's 1955 loss	$2,000
Y's 1955 loss	1,000
X's 1956 loss	3,000
Y's 1957 loss	15,000
Total	21,000

(f) *Computation of carryovers and carrybacks when date of distribution or transfer is not on last day of acquiring corporation's taxable year*—(1) *General rule.* Pursuant to the provisions of section 381(c)(1)(C), the taxable income of the acquiring corporation for its taxable year which is a prior taxable year for purposes of section 172(b)(2) and paragraph (e) of this section shall be determined in the manner prescribed in this paragraph, if the date of distribution or transfer occurs within, but not on the last day of, such taxable year.

(2) *Taxable year considered as two taxable years.* Such taxable year of the acquiring corporation shall be considered as though it were two taxable years, but only for the limited purpose of applying section 172(b)(2). The first of such two taxable years shall be referred to in this section as the preacquisition part year; the second, as the postacquisition part year. For purposes of section 172(b)(2), a net operating loss of the acquiring corporation shall be carried to the preacquisition part year and then to the postacquisition part year, whereas a net operating loss of a distributor or transferor corporation shall be carried to the postacquisition part year and then to the acquiring corporation's subsequent taxable years. In determining under section 172(b)(2) and this paragraph the portion of any net operating loss of a distributor or transferor corporation which is carried to any taxable year of the acquiring corporation ending after the postacquisition part year, the taxable income (as determined under this paragraph) of the postacquisition part year shall be taken into account but the taxable income of the preacquisition part year (as so determined) shall not be taken into account. Though considered as two separate taxable years for purposes of section 172(b)(2), the preacquisition part year and the postacquisition part year are treated as one taxable year in determining the years to which a net operating loss is carried under section 172(b)(1). See paragraph (e)(3) of this section.

(3) *Preacquisition part year.* The preacquisition part year shall begin with the beginning of such taxable year of the acquiring corporation and shall end with the close of the date of distribution or transfer.

(4) *Postacquisition part year.* The postacquisition part year shall begin with the day following the date of distribution or transfer and shall end with the close of such taxable year of the acquiring corporation.

(5) *Division of taxable income.* The taxable income for such taxable year (computed with the modifications specified in section 172(b)(2)(A) but without any net operating loss deduction) of the acquiring corporation shall be divided between the preacquisition part year and the postacquisition part year in proportion to the number of days in each. Thus, if in a statutory merger to which section 361 applies Y Corporation acquires the assets of X Corporation on June 30, 1960, and Y Corporation has taxable income (computed in the manner so prescribed) of $36,600 for its calendar year 1960, then the preacquisition part year taxable income would be $18,200 ($36,600× 182/366) and the postacquisition part year taxable income would be $18,400 ($36,600× 184/366).

(6) *Net operating loss deduction.* After obtaining the taxable income of the preacquisition part year and of the postacquisition part year in the manner described in subparagraph (5) of this paragraph, it is necessary to compute the net operating loss deduction for each such part year. This deduction

shall be determined in the manner prescribed by section 172(b)(2)(B) but subject to the provisions of this subparagraph. The net operating loss deduction for the preacquisition part year shall, for purposes of section 172(b)(2) only, be determined in the same manner as that prescribed by section 172(b)(2)(B) but shall be computed without taking into account any net operating loss of the distributor or transferor corporation. Therefore, only net operating loss carryovers and carrybacks of the acquiring corporation to the preacquisition part year shall be taken into account in computing the net operating loss deduction for such part year. The net operating loss deduction for the post- acquisition part year shall, for purposes of section 172(b)(2) only, be determined in the same manner as that prescribed by section 172(b)(2)(B) and shall be computed by taking into account all the net operating loss carryovers available to the distributor or transferor corporation as of the close of the date of distribution or transfer, as well as the net operating loss carryovers and carrybacks of the acquiring corporation to the postacquisition part year. The sequence in which the net operating losses of the two corporations shall be applied for purposes of this subparagraph shall be determined in the manner prescribed in paragraph (e) of this section.

(7) *Limitation on taxable income.* In no case shall the taxable income of the preacquisition part year or the postacquisition part year, as computed under this paragraph, be considered to be less than zero.

(8) *Cross reference.* If the acquiring corporation succeeds to the net operating loss carryovers of two or more distributors or transferor corporations on two or more dates of distribution or transfer during the same taxable year of the acquiring corporation, the determination of the taxable income of the acquiring corporation for such year pursuant to section 381(c)(1)(C) shall be governed by the rules prescribed in paragraph (c) of § 1.381(c)(1)–2.

(9) *Illustration.* The application of this paragraph may be illustrated by the following example:

Example— (i) *Facts.* X Corporation was organized on January 1, 1955, and Y Corporation was organized on January 1, 1954. Each corporation makes its return on the basis of the calendar year. On June 30, 1956, X Corporation transferred all its assets to Y Corporation in a statutory merger to which section 361 applies. The net operating losses and the taxable income (computed without any net operating loss deduction) of the two corporations are as follows, the assumption being made that none of the modifications specified in section 172(b)(2)(A) apply to any taxable year:

Taxable year	X Corporation (transferor)	Y Corporation (acquirer)
1954	xxx	($5,000)
1955	($65,000)	(20,000)
Ending June 30, 1956	1,000	xxx
1956	xxx	36,600

(ii) *Y Corporation's 1954 loss.* The carryover to 1957 is $0, computed as follows:

Net operating loss		$5,000
Less:		
Y's 1955 taxable income		0
Carryover to Y's preacquisition part year		5,000
Less:		
Y's preacquisition part year taxable income computed under subparagraph (5) of this paragraph ($36,600× 182/366)	$18,200	
Minus Y's net operating loss deduction for preacquisition part year	xxx	18,200
Carryover to Y's postacquisition part year and also to Y 1957		0

(iii) *X Corporation's 1955 loss.* The carryover to 1957 is $45,600, computed as follows:

Net operating loss		$65,000
Less:		
X's 6/30/56 year taxable income		1,000
Carryover to Y's postacquisition part year		64,000
Less:		
Y's postacquisition part year taxable income computed under subparagraph (5) of this paragraph ($36,600×184/366)	$18,400	
Minus Y's net operating loss deduction for postacquisition part year (i.e., Y's 1954 carryover of $0 to such part year)		$18,400
Carryover to Y 1957		45,600

(iv) *Y Corporation's 1955 loss.* The carryover to 1957 is $6,800, computed as follows:

Net operating loss	$20,000
Less:	
Y's 1954 taxable income	0
Carryover to Y's preacquisition part year	20,000

Less:		
Y's preacquisition part year taxable income computed under subparagraph (5) of this paragraph	$18,200	
Minus Y's net operating loss deduction for preacquisition part year (i.e., Y's 1954 carryover to such part year)	5,000	
		13,200
Carryover to Y's postacquisition part year		6,800
Less:		
Y's postacquisition part year taxable income computed under subparagraph (5) of this paragraph	$18,400	
Minus Y's net operating loss deduction for postacquisition part year (i.e., Y's 1954 carryover of $0, and X's 1955 carryover of $64,000, to such part year)	64,000	
		0
Carryover to Y 1957		6,800

(v) *Summary of carryovers to 1957.* The aggregate of the net operating loss carryovers to 1957 is $52,400, determined as follows:

Y's 1954 loss	0
X's 1955 loss	$45,600
Y's 1955 loss	6,800
Total	52,400

(g) *Successive acquiring corporations.* An acquiring corporation which, in a distribution or transfer to which section 381(a) applies, acquires the assets of a distributor or transferor corporation which previously acquired the assets of another corporation in a transaction to which section 381(a) applies, shall succeed to and take into account, subject to the conditions and limitations of sections 172 and 381, the net operating loss carryovers available to the first acquiring corporation under sections 172 and 381.

(h) *Illustration.* The application of this section may be further illustrated by the following example:

Example— (1) *Facts.* X Corporation was organized on January 1, 1954, and Y Corporation was organized on January 1, 1955. Each corporation makes its return on the basis of the calendar year. On August 31, 1957, X Corporation transferred all its assets to Y Corporation in a statutory merger to which section 361 applies. The net operating losses and the taxable income of the two corporations for the taxable years involved are set forth in the tabulation below. The taxable income so shown is computed without the modifications required by section 172(b)(2)(A) and without the benefit of any net operating loss deduction. In its calendar year 1957, Y Corporation had a deduction of $365 which is disallowed by section 172(b)(2)(A).

Taxable year	X Corporation (transferor)	Y Corporation (acquirer)
1954	($7,000)	xxx
1955	(10,000)	($10,000)
1956	(25,000)	(15,000)
Ending 8–31–57	1,000	xxx
1957	xxx	54,750
1958	xxx	(5,000)
1959	xxx	50,000

(2) *Computation of carryovers and carrybacks.* The sequence in which the losses of X Corporation and Y Corporation are applied and the computation of the carryovers to Y Corporation's calendar year 1959 may be illustrated as follows:

(i) *X Corporation's 1954 loss.* The carryover to 1958, which is the last year to which this loss may be carried, is $0, computed as follows:

Net operating loss		$7,000
Less:		
X's 1955 taxable income	0	
X's 1956 taxable income	0	
		0
Carryover to X's 8/31/57-year		7,000
Less:		
X's 8/31/57-year taxable income		1,000
Carryover to Y's postacquisition part year		6,000
Less:		
Y's postacquisition part year taxable income computed under paragraph (f)(5) of this section (($54,750+$365) × 122/365)	$18,422	
Minus Y's net operating loss deduction for postacquisition part year	xxx	
		18,422
Carryover to Y 1958		0

(ii) *X Corporation's 1955 loss.* The carryover to 1959 is $0, computed as follows:

Net operating loss		$10,000
Less:		
X's 1954 taxable income	0	
X's 1956 taxable income	0	
		0
Carryover to X's 8/31/57-year		10,000
Less:		
X's 8/31/57-year taxable income before net operating loss deduction	$1,000	
Minus X's net operating loss deduction for 8/31/57-year (i.e., X's 1954 carryover)	7,000	

		0
Carryover to Y's postacquisition part year		10,000
Less:		
Y's postacquisition part year taxable income computed under paragraph (f)(5) of this section	$18,422	
Minus Y's net operating loss deduction for postacquisition part year (i.e., X's 1954 carryover to such part year)	6,000	
		12,422
Carryover to Y 1958 and Y 1959		0

(iii) *Y Corporation's 1955 loss.* The carryover to 1959 is $0, computed as follows:

Net operating loss		$10,000
Less:		
Y's 1956 taxable income		0
Carryover to Y's preacquisition part year		10,000
Less:		
Y's preacquisition part year taxable income computed under paragraph (f)(5) of this section (($54,750+$365) × 243/365)	$36,693	
Minus Y's net operating loss deduction for preacquisition part year	xxx	
		36,693
Carryover to Y's postacquisition part year, to Y 1958, and to Y 1959		0

(iv) *X Corporation's 1956 loss.* The carryover to 1959 is $22,578, computed as follows:

Net operating loss			$25,000
Less:			
X's 1954 taxable income		0	
X's 1955 taxable income		0	
X's 8/31/57-year taxable income before net operating loss deduction	$1,000		
Minus X's net operating loss deduction for 8/31/57-year (i.e., X's 1954 carryover of $7,000 and X's 1955 carryover of $10,000)	$17,000	0	0
Carryover to Y's postacquisition part year			$25,000
Less:			
Y's postacquisition part year taxable income computed under paragraph (f)(5) of this section		$18,422	
Minus Y's net operating loss deduction for postacquisition part year (i.e., X's 1954 carryover of $6,000, X's 1955 carryover of $10,000 and Y's 1955 carryover of $0, to such part year)		16,000	
			2,422
Carryover to Y 1958			22,578
Less:			
Y's 1958 taxable income			0
Carryover to Y 1959			22,578

(v) *Y Corporation's 1956 loss.* The carryover to 1959 is $0, computed as follows:

Net operating loss		$15,000
Less:		
Y's 1955 taxable income		0
Carryover to Y's preacquisition part year		15,000
Less:		
Y's preacquisition part year taxable income computed under paragraph (f)(5) of this section	$36,693	
Minus Y's net operating loss deduction for preacquisition part year (i.e., Y's 1955 carryover to such part year)	10,000	
		26,693
Carryover to Y's postacquisition part year, to Y 1958, and to Y 1959		0

(vi) *Y Corporation's 1958 loss.* The carryover to 1959 is $0, computed as follows:

Net operating loss		$5,000
Less:		
Y's 1955 taxable income [1]	0	
Y's 1956 taxable income	0	
		0
Carryback to Y's preacquisition part year		$5,000
Less:		
Y's preacquisition part year taxable income computed under paragraph (f)(5) of this section	$36,693	
Minus Y's net operating loss deduction for preacquisition part year (i.e., Y's 1955 carryover of $10,000, and Y's 1956 carryover of $15,000, to such part year)	25,000	
		11,693
Carryback to Y's postacquisition part year and carryover to Y 1959		0

[1] Three-year carryback in case of loss years ending after December 31, 1957.

(vii) *Summary of carryovers to 1959.* The aggregate of the net operating loss carryovers to 1959 is $22,578, computed as follows:

X's 1955 loss	0
Y's 1955 loss	0
X's 1956 loss	$22,578
Y's 1956 loss	0
Y's 1958 loss	0
Total	22,578

(3) *Net operating loss deduction for 1957.* (i) The net operating loss deduction available to Y Corporation under section 172(a) for the calendar year 1957, determined in accordance

with paragraph (d) of this section, is $48,300, computed as follows:

Aggregate of the net operating loss carryovers available to the transferor corporation as of the close of August 31, 1957, but limited by paragraph (d) of this section to $18,300 (Y's 1957 taxable income of $54,750, computed without any net operating loss deduction, multiplied by 122/365)		
Carryover of X's 1954 loss	$6,000	
Carryover of X's 1955 loss	10,000	
Carryover of X's 1956 loss	25,000	
	$41,000	
Aggregate of carryovers, limited as above		$18,300
Carryover of Y's 1955 loss		10,000
Carryover of Y's 1956 loss		15,000
Carryback of Y's 1958 loss		5,000
Net operating loss deduction		48,800

(ii) The taxable income under section 63 for 1957 is $6,450, computed as follows:

Taxable income determined without any net operating loss deduction	$54,750
Less:	
Net operating loss deduction for 1957, as determined under subdivision (i) of this subparagraph	$48,300
Taxable income under section 63	6,450

(4) *Net operating loss deduction for 1959.* The taxable income under section 63 for 1959 is $27,422, computed as follows:

Taxable income determined without any net operating loss deduction	$50,000
Less:	
Net operating loss deduction for 1959 (i.e., the aggregate carryovers determined under subparagraph (2)(vii) of this paragraph)	22,578
Taxable income under section 63	27,422

(5) *Years to which losses may be carried.* The taxable years to which the losses of X Corporation and Y Corporation may be carried, and the sequence in which carried, are as follows:

Loss year	Carried to
X 1954	X 1955, X 1956, X 8/31/57, Y 1957, Y 1958.
X 1955	X 1954, X 1956, X 8/31/57, Y 1957, Y 1958, Y 1959.
Y 1955	Y 1956, Y 1957, Y 1958, Y 1959, Y 1960.
X 1956	X 1954, X 1955, X 8/31/57, Y 1957, Y 1958, Y 1959, Y 1960.
Y 1956	Y 1955, Y 1957, Y 1958, Y 1959, Y 1960, Y 1961.
Y 1958	Y 1955, Y 1956, Y 1957, Y 1959, Y 1960, Y 1961, Y 1962, Y 1963.

[T.D. 6500, 25 FR 11607, Nov. 26, 1960, as amended by T.D. 7564, 43 FR 40493, Sept. 12, 1978]

§ 1.381(c)(1)–2 Net operating loss carryovers; two or more dates of distribution or transfer in the taxable year.

(a) *In general.* If the acquiring corporation succeeds to the net operating loss carryovers of two or more distributor or transferor corporations on two or more dates of distribution or transfer within one taxable year of the acquiring corporation, the limitation to be applied under section 381(c)(1)(B) to the aggregate of the net operating loss carryovers to that taxable year from all of the distributor or transferor corporations shall be determined by applying the rules prescribed in paragraph (b) of this section, and the taxable income of the acquiring corporation for that taxable year under sections 381(c)(1)(C) and 172(b)(2) shall be determined by applying the rules prescribed in paragraph (c) of this section. For purposes of this section, the term *postacquisition income* means postacquisition part year taxable income determined under paragraph (d)(1) of § 1.381(c)(1)–1 by treating the first date of distribution or transfer as though it were the only date of distribution or transfer during the taxable year of the acquiring corporation.

(b) *Determination of limitation under section 381(c)(1)(B)*—(1) *In general.* If the acquiring corporation succeeds to the net operating loss carryovers of two or more distributor or transferor corporations on two or more dates of distribution or transfer during the same taxable year of the acquiring corporation, and if the amount of the net operating loss carryovers acquired on the first date of distribution or transfer equals or exceeds the postacquisition income, then the limitation under section 381(c)(1)(B) shall be an amount equal to such postacquisition income. If the amount of the net operating loss carryovers acquired on the first date of distribution or transfer is less than such postacquisition income, then the limitation under section 381(c)(1)(B) shall be determined as provided in subparagraphs (2) through (5) of this paragraph.

(2) *Allocation of postacquisition income among partial postacquisition years.* That part of the taxable year of the acquiring corporation beginning on the day

following the first date of distribution or transfer and ending with the close of the taxable year of the acquiring corporation shall be divided into the same number of partial postacquisition years as the number of dates of distribution or transfer on which the acquiring corporation succeeds to net operating loss carryovers during its taxable year. The first partial postacquisition year shall begin with the day following the first date of distribution or transfer and shall end with the close of the second date of distribution or transfer. The second and succeeding partial postacquisition years shall begin with the day following the close of the preceding such partial year and shall end with the close of the succeeding date of distribution or transfer, or, if there is no such succeeding date, then with the close of the taxable year of the acquiring corporation. The postacquisition income of the acquiring corporation shall be allocated among the partial postacquisition years in proportion to the number of days in each such partial year.

(3) *Two dates of distribution or transfer.* If the acquiring corporation succeeds to the net operating loss carryovers of two distributor or transferor corporations on two dates of distribution or transfer during the same taxable year of the acquiring corporation, and if the amount of the net operating loss carryovers acquired on the first date equals or exceeds the income for the first partial postacquisition year, the limitation provided by section 381(c)(1)(B) shall be the amount of the postacquisition income. If the income for the first partial postacquisition year exceeds the net operating loss carryovers acquired on the first date of distribution or transfer, the limitation provided by section 381(c)(1)(B) shall be the amount of the postacquisition income reduced by the amount of such excess. The application of this subparagraph may be illustrated by the following example:

Example. (i) X Corporation has taxable income (computed without any net operating loss deduction) of $36,500 for its calendar year 1955. During 1955, X Corporation acquires the assets of Y and Z Corporations in statutory mergers to each of which section 361 applies, the dates of transfer being January 1 and December 1, respectively. The net operating loss carryovers of each transferor corporation and the income for each partial postacquisition year are:

Corp.	Carryovers	Income for partial years	Reduction
Y	$1,000	$33,400 ($36,500×334/365)	$32,400
Z	50,000	3,000 ($36,500×30/365)	0
	51,000	36,400	32,400

(ii) The limitation provided by section 381(c)(1)(B) equals the postacquisition income of $36,400 reduced by $32,400, the excess of the income for the first partial year ($33,400) over the net operating loss carryovers acquired on the first date of transfer ($1,000). Accordingly, the limitation is $4,000 ($36,400 minus $32,400). Therefore, although X Corporation acquired carryovers aggregating $51,000 during 1955, it can utilize only $4,000 of such carryovers in computing its net operating loss deduction for 1955.

(4) *Three dates of distribution or transfer.* If the acquiring corporation succeeds to the net operating loss carryovers of three distributor or transferor corporations on three dates of distribution or transfer during the same taxable year of the acquiring corporation, and if the amount of the net operating loss carryovers acquired on the first date equals or exceeds the income for the first and second partial postacquisition years, the limitation provided by section 381(c)(1)(B) shall be the amount of the postacquisition income. If the amount of the carryovers acquired on the first date equals or exceeds the income for the first partial postacquisition year but does not equal or exceed the income for the first and second partial postacquisition years, the limitation shall be the amount of the postacquisition income reduced by the excess of the income for the first and second partial postacquisition years over the amount of carryovers acquired on the first and second dates of distribution or transfer. If the income for the first partial postacquisition year exceeds the carryovers acquired on the first date, the limitation shall be the postacquisition income reduced by the sum of the amount of such excess plus the amount, if any, by which the income for the second partial postacquisition year exceeds the carryovers acquired on the second date. This subparagraph may be illustrated by the following examples:

Example (1). (i) X Corporation has taxable income (computed without any net operating loss deduction) of $36,500 for its calendar year 1955. During 1955, X Corporation acquires the assets of M, N, and Z Corporations in statutory mergers to each of which section 361 applies, the dates of transfer being January 1, January 31, and December 1, respectively. The net operating loss carryovers of each transferor corporation and the income for each partial postacquisition year are:

Corp.	Carryovers	Income for partial years	Reduction
M	$4,000	$3,000 ($36,500× 30/365)	$23,400
N	6,000	30,400 ($36,500×304/365)	
Z	50,000	3,000 ($36,500× 30/365)	0
	60,000	36,400	23,400

(ii) Since the carryovers of $4,000 acquired on the first date of transfer exceed the income for the first partial year ($3,000), the limitation provided by section 381(c)(1)(B) is the amount of the postacquisition income ($36,400) reduced by the excess of the income for the first and second partial years ($33,400) over the carryovers acquired on the first and second dates of transfer ($10,000). Therefore, the limitation is $13,000 ($36,400 less $23,400).

Example (2). (i) Assume the same facts as in *Example (1)* except that the amount of the net operating loss carryovers acquired from M Corporation is $1,000. The net operating loss carryovers of each transferor corporation and the income for each partial postacquisition year are:

Corp.	Carryovers	Income for partial years	Reduction
M	$1,000	$3,000 ($36,500×30/365)	$2,000
N	6,000	30,400 ($36,500×304/365)	24,400
Z	50,000	3,000 ($36,500×30/365)	0
	57,000	36,400	26,400

(ii) Since the income for the first partial year ($3,000) exceeds the $1,000 of carryovers acquired on the first date by $2,000, the limitation provided by section 381(c)(1)(B) is the postacquisition income of $36,400 reduced by such excess and also reduced by the excess of the income for the second partial year ($30,400) over the carryovers acquired on the second date of transfer ($6,000). Therefore, the limitation is $10,000 ($36,400 less the sum of $2,000 and $24,400).

Example (3). (i) Assume the same facts as in *Example (2)* except that the carryovers acquired from N Corporation are $75,000. The net operating loss carryovers of each transferor corporation and the income for each partial postacquisition year are:

Corp.	Carryovers	Income for partial years	Reduction
M	$1,000	$3,000 ($36,500× 30/365)	$2,000
N	75,000	30,400 ($36,500×304/365)	0
Z	50,000	3,000 ($36,500× 30/365)	0
	126,000	36,400	2,000

(ii) Since the income for the first partial year ($3,000) exceeds the $1,000 of carryovers acquired on the first date by $2,000, the limitation provided by section 381(c)(1)(B) is the postacquisition income of $36,400 reduced by $2,000, or $34,400. No further reduction is made since the income for the second partial year ($30,400) does not exceed the carryovers of $75,000 acquired on the second date of transfer.

(5) *Four or more dates of distribution or transfer.* If the acquiring corporation succeeds to the net operating loss carryovers of four or more distributor or transferor corporations on four or more dates of distribution or transfer during the same taxable year of the acquiring corporation, the limitation provided by section 381(c)(1)(B) shall be determined consistently with the methods prescribed in subparagraphs (3) and (4) of this paragraph. The application of this subparagraph may be illustrated by the following example:

Example. (i) X Corporation has taxable income (computed without any net operating loss deduction) of $36,500 for its calendar year 1955. During 1955, X Corporation acquired the assets of M, N, O, Y, and Z Corporations in statutory mergers to each of which section 361 applied, the dates of transfer being, respectively, January 1, January 31, March 3, April 2, and December 1. The net operating loss carryovers of each transferor corporation and the income for each partial postacquisition year are:

Corp.	Carryovers	Income for partial years	Reduction
M	$1,000	$3,000 ($36,500× 30/365)	$2,000
N	4,000	3,100 ($36,500× 31/365)	
O	1,000	3,000 ($36,500× 30/365)	1,100
Y	10,000	24,300 ($36,500×243/365)	14,300
Z	20,000	3,000 ($36,500× 30/365)	0
	36,000	36,400	17,400

(ii) The limitation provided by section 381(c)(1)(B) equals the postacquisition income of $36,400 reduced by the sum of (a) the $2,000 excess of the income for the first partial year ($3,000) over the carryovers acquired from M Corporation ($1,000), (b) the $1,100 excess of the income for the second and third partial years ($6,100) over the

carryovers acquired from N and O Corporations ($5,000), and (c) the $14,300 excess of the income for the fourth partial year ($24,300) over the carryovers acquired from Y Corporation ($10,000). Accordingly, the limitation is $19,000 ($36,400 minus $17,400). Therefore, although X Corporation acquired carryovers aggregating $36,000 during 1955, it can utilize only $19,000 of such carryovers in computing its net operating loss deduction for 1955.

(c) *Determination of taxable income of acquiring corporation under section 381(c)(1)(C)*—(1) *In general.* If the acquiring corporation succeeds to the net operating loss carryovers of two or more distributor or transferor corporations on two or more dates of distribution or transfer within one taxable year of the acquiring corporation, then pursuant to section 381(c)(1)(C) the taxable income of the acquiring corporation for its taxable year which is a prior taxable year for purposes of section 172(b)(2) and paragraph (e) of § 1.381(c)(1)–1 shall be determined as provided in this paragraph.

(2) *Division of taxable income.* The taxable income of the acquiring corporation (computed with the modifications specified in section 172(b)(2)(A) but without any net operating loss deduction) shall be allocated proportionately on a daily basis among a preacquisition part year (determined under paragraph (f)(3) of § 1.381(c)(1)–1 by treating the first date of distribution or transfer as though it were the only date of distribution or transfer during the taxable year of the acquiring corporation) and two or more partial postacquisition years (determined as provided in paragraph (b)(2) of this section). The preacquisition part year and each partial postacquisition year shall be considered a separate taxable year, but only for the limited purpose of applying sections 172(b)(2) and 381(c)(1)(C).

(3) *Net operating loss deduction.* The net operating loss deduction of the preacquisition part year and the partial postacquisition years shall be determined consistently with the manner described in paragraph (f)(6) of § 1.381(c)(1)–1 but by taking into account, in the case of any partial postacquisition year, only the net operating loss carryovers and carrybacks of the acquiring corporation and those net operating loss carryovers from a distributor or transferor corporation which become available to the acquiring corporation as of the close of those dates of distribution or transfer which occur before the beginning of that specific partial postacquisition year. The sequence in which the net operating losses of the distributor or transferor and acquiring corporations shall be applied for this purpose shall be determined in the manner described in paragraph (e) of § 1.381(c)(1)–1. Subject to the preceding sentence, the net operating loss carryovers to any specific partial postacquisition year, whether from a distributor, transferor, or acquiring corporation, shall be taken into account in the order of the taxable years in which the net operating losses arose, beginning with the loss for the earliest taxable year.

(4) *Illustration.* The application of this paragraph may be illustrated by the following example:

Example— (i) *Facts.* X Corporation, which was organized on January 1, 1957, sustained a net operating loss of $20,000 for its calendar year 1957 and had taxable income (computed without any net operating loss deduction) of $36,500 for its calendar year 1958. During 1958, X Corporation acquired the assets of Y and Z Corporations in statutory mergers to each of which section 361 applied, the dates of transfer being June 30 and September 30, respectively. None of the modifications specified in section 172(b)(2)(A) apply to any of the corporations for any taxable year. The taxable income (computed without any net operating loss deduction) and net operating losses of Y and Z Corporations (which were organized on January 1, 1957, and January 1, 1954, respectively) are set forth below:

Taxable year	Acquiring corporation X	Transferor corporation Y	Transferor corporation Z
1954	xxx	xxx	($30,000)
1955	xxx	xxx	1,000
1956	xxx	xxx	1,000
1957	($20,000)	($25,000)	1,000
Ending 6–30–58	xxx	1,000	xxx
Ending 9–30–58	xxx	xxx	1,000
1958	36,500	xxx	xxx

The sequence in which the losses of the acquiring corporation and the transferor corporations are applied and the computation of the carryovers to X Corporation's calendar year 1959 are illustrated in the following subdivisions of this example.

(ii) *Computation of taxable income.* X Corporation's taxable income, determined in the manner described in subparagraph (2) of this

paragraph, for the preacquisition part year and for the partial postacquisition years is as follows:

Year	Taxable income	Computation
Preacquisition part year ...	$18,100	$36,500×181/365
Partial No. 1	9,200	36,500×92/365
Partial No. 2	9,200	36,500×92/365

(iii) *Z Corporation's 1954 loss.* The carryover to 1959 is $0, computed as follows:

Net operating loss	$30,000
Less:	
Z's 1955, 1956, 1957, and 9/30/58-3 year income	4,000
Net operating loss carryover to Partial No. 2 year	26,000
Less:	
Partial No. 2 year taxable income	9,200
	16,800

The balance of $16,800 is not carried over to 1959 since X Corporation's taxable year 1958 is the last of the five years to which Z's 1954 loss may be carried under section 172(b)(1).

(iv) *Y Corporation's 1957 loss.* The carryover to 1959 is $14,800, computed as follows:

Net operating loss		$25,000
Less:		
Y's 6/30/58-year income		1,000
Net operating loss carryover to Partial No. 1 year		24,000
Less:		
Partial No. 1 year taxable income		9,200
Carryover to Partial No. 2 year		14,800
Less:		
X's Partial No. 2 year taxable income	$9,200	
Minus X's net operating loss deduction for Partial No. 2 year (i.e., Z's 1954 carryover of $26,000 to such partial year) ..	26,000	
		0
Carryover to 1959		14,800

(v) *X Corporation's 1957 loss.* The carryover to 1959 is $1,900, computed as follows:

Net operating loss		$20,000
Less:		
X's preacquisition part year taxable income ..		18,100
Carryover to Partial No. 1 year		1,900
Less:		
Partial No. 1 year taxable income	$9,200	
Minus X's net operating loss deduction for Partial No. 1 year (i.e., Y's 1957 carryover of $24,000 to such partial year) ..	24,000	
		0
Carryover to Partial No. 2 year		1,900
Less:		
Partial No. 2 year taxable income	$9,200	
Minus X's net operating loss deduction for Partial No. 2 year (i.e., Z's 1954 carryover of $26,000, and Y's 1957 carryover of $14,800, to such partial year	40,800	
		0
Carryover to 1959		$1,900

(vi) *Summary of carryovers to 1959.* The aggregate of the net operating loss carryovers to 1959 is $16,700, computed as follows:

Z's 1954 loss	xxx
Y's 1957 loss	$14,800
X's 1957 loss	91,900
Total	16,700

§ 1.381(c)(2)–1 Earnings and profits.

(a) *In general.* (1) Section 381(c)(2) requires the acquiring corporation in a transaction to which section 381(a) applies to succeed to, and take into account, the earnings and profits, or deficit in earnings and profits, of the distributor or transferor corporation as of the close of the date of distribution or transfer. In determining the amount of such earnings and profits, or deficit, to be carried over, and the manner in which they are to be used by the acquiring corporation after such date, the provisions of section 381(c)(2) and this section shall apply. For purposes of section 381(c)(2) and this section, if the distributor or transferor corporation accumulates earnings and profits, or incurs a deficit in earnings and profits, after the date of distribution or transfer and before the completion of the reorganization or liquidation, such earnings and profits, or deficit, shall be deemed to have been accumulated or incurred as of the close of the date of distribution or transfer.

(2) If the distributor or transferor corporation has accumulated earnings and profits as of the close of the date of distribution or transfer, such earnings and profits shall (except as hereinafter provided in this section) be deemed to be received by, and to become a part of the accumulated earnings and profits of, the acquiring corporation as of such time. Similarly, if the distributor or transferor corporation has a deficit in accumulated earnings and profits as of the close of the date of distribution or transfer, such deficit shall (except as hereinafter provided in this section) be deemed to be incurred by the acquiring

corporation as of such time. In no event, however, shall the accumulated earnings and profits, or deficit, of the distribution or transferor corporation be taken into account in determining earnings and profits of the acquiring corporation for the taxable year during which occurs the date of distribution or transfer.

(3) Any part of the accumulated earnings and profits, or deficit in accumulated earnings and profits, of the distributor or transferor corporation which consists of earnings and profits, or deficits, accumulated before March 1, 1913, shall be deemed to become earnings and profits, or deficits, of the acquiring corporation accumulated before March 1, 1913, and any part of the accumulated earnings and profits of the distributor or transferor corporation which consists of increase in value of property accrued before March 1, 1913, shall be deemed to become earnings and profits of the acquiring corporation consisting of increase in value of property accrued before March 1, 1913.

(4) If the acquiring corporation and each distributor or transferor corporation has accumulated earnings and profits as of the close of the date of distribution or transfer, or if each of such corporations has a deficit in accumulated earnings and profits as of such time, then the accumulated earnings and profits (or deficit) of each such corporation shall be consolidated as of the close of the date of distribution or transfer in the accumulated earnings and profits account of the acquiring corporation. See subparagraph (6) of this paragraph for determination of the accumulated earnings and profits (or deficit) of the acquiring corporation as of the close of the date of distribution or transfer.

(5) If (i) one or more corporations a party to a distribution or transfer has accumulated earnings and profits as of the close of the date of distribution or transfer, and (ii) one or more of such corporations has a deficit in accumulated earnings and profits as of such time, the total of any such deficits shall be used only to offset earnings and profits accumulated, or deemed to have been accumulated under subparagraph (6) of this paragraph, by the acquiring corporation after the date of distribution or transfer. In such instance, the acquiring corporation will be considered as maintaining two separate earnings and profits accounts after the date of distribution or transfer. The first such account shall contain the total of the accumulated earnings and profits as of the close of the date of distribution or transfer of each corporation which has accumulated earnings and profits as of such time, and the second such account shall contain the total of the deficits in accumulated earnings and profits of each corporation which has a deficit as of such time. The total deficit in the second account may not be used to reduce the accumulated earnings and profits in the first account (although such earnings and profits may be offset by deficits incurred, or deemed to have been incurred, after the date of distribution or transfer) but shall be used only to offset earnings and profits accumulated, or deemed to have been accumulated under subparagraph (6) of this paragraph, by the acquiring corporation after the date of distribution or transfer.

(6) In any case in which it is necessary to compute the accumulated earnings and profits, or the deficit in accumulated earnings and profits, of the acquiring corporation as of the close of the date of distribution or transfer and such date is a day other than the last day of a taxable year of the acquiring corporation—

(i) If the acquiring corporation has earnings and profits for its taxable year during which occurs the date of distribution or transfer, such earnings and profits (*a*) shall be deemed to have accumulated as of the close of such date in an amount which bears the same ratio to the undistributed earnings and profits of such corporation for such year as the number of days in the taxable year preceding the date following the date of distribution or transfer bears to the total number of days in the taxable year, and (*b*) shall be deemed to have accumulated after the date of distribution or transfer in an amount which bears the same ratio to the undistributed earnings and profits of such corporation for such year as the number of days in the taxable year

following such date bears to the total number of days in such taxable year. For purposes of the preceding sentence, the undistributed earnings and profits of the acquiring corporation for such taxable year shall be the earnings and profits for such taxable year reduced by any distributions made therefrom during such taxable year.

(ii) If the acquiring corporation has an operating deficit for its taxable year during which occurs the date of distribution or transfer, then, unless the actual accumulated earnings and profits, or deficit, as of such date can be shown, such operating deficit shall be deemed to have accumulated in a manner similar to that described in subdivision (i) of this subparagraph.

(7) This paragraph may be illustrated by the following examples, in which it is assumed that none of the accumulated earnings and profits, or deficits, consist of earnings and profits or deficits accumulated, or increase in value of property accrued, before March 1, 1913.

Example (1). (i) M and N Corporations make their returns on the basis of the calendar year. On June 30, 1959, M Corporation transfers all its assets to N Corporation in a statutory merger to which section 361 applies. The books of the two corporations reveal the following information:

Description	M Corporation (transferor)	N Corporation (acquirer)
Accumulated earnings and profits at close of calendar year 1958 ..	$100,000	$150,000
Earnings and profits of taxable year ending June 30, 1959	15,000	.....
Earnings and profits of calendar year 1959	.....	36,500
Distributions during calendar year 1959	0	0

(ii) As of the close of June 30, 1959, N acquires from M accumulated earnings and profits of $115,000. Since M and N each has accumulated earnings and profits as of the close of the date of transfer, M's accumulated earnings and profits are added to N's accumulated earnings and profits as of such time. However, no part of M's accumulated earnings and profits is taken into account in determining N's earnings and profits for the calendar year 1959. Therefore, N's earnings and profits for the calendar year 1959 are $36,500.

Example (2). (i) X and Y Corporations make their returns on the basis of the calendar year. On June 30, 1959, X Corporation transfers all its assets to Y Corporation in a statutory merger to which section 361 applies. The books of the two corporations reveal the following information:

Description	X Corporation (transferor)	Y Corporation (acquirer)
Accumulated earnings and profits at close of calendar year 1958 ..	$20,000	$100,000
Deficit in earnings and profits for taxable year ending June 30, 1959	80,000	.....
Earnings and profits of calendar year 1959	.....	36,500
Distributions during calendar year 1959	0	0

(ii) As of the close of June 30, 1959, Y acquires from X a deficit in accumulated earnings and profits in the amount of $60,000. This deficit may be used only to reduce those earnings and profits of Y which are accumulated, or deemed to have accumulated, after June 30, 1959. Accordingly, as of December 31, 1959, the accumulated earnings and profits of Y amount to $118,100; at such time Y also has a separate deficit in accumulated earnings and profits in the amount of $41,600. These amounts are determined as follows:

Accumulated earnings and profits of Y as of the close of 1958	$100,000
Add:	
Portion of undistributed earnings and profits of Y for 1959 deemed to have accumulated as of close of June 30, 1959 ($36,500×181/365)	18,100
Accumulated earnings and profits of Y as of close of June 30, 1959, and also as of Dec. 31, 1959	118,100
Portion of undistributed earnings and profits of Y for 1959 deemed to have accumulated after June 30, 1959 ($36,500×184/365)	18,400
Less:	
Deficit in accumulated earnings and profits acquired by Y from X Corporation as of close of June 30, 1959	60,000
Separate deficit in accumulated earnings and profits of Y as of Dec. 31, 1959	41,600

Example (3). Assume the same facts as in *Example (2)*, except that on September 15, 1959, Y Corporation makes a cash distribution of $96,500. The entire distribution is a dividend: $36,500 from earnings and profits for the taxable year 1959 and $60,000 from earnings and profits accumulated as of December 31, 1958. Accordingly, as of December 31, 1959, Y has accumulated earnings and profits of $40,000, and also has a separate deficit in accumulated earnings and profits of $60,000. These amounts are determined as follows:

Earnings and profits of Y for calendar year 1959	$36,500
Accumulated earnings and profits of Y as of close of 1958	100,000
Total	136,500
Less:	
Distributions during 1959	96,500
Accumulated earnings and profits of Y as of Dec. 31, 1959	40,000
Deficit in accumulated earnings and profits acquired from X as of close of June 30, 1959	$60,000
Less:	
Portion of Y's undistributed earnings and profits for 1959 deemed to have accumulated after June 30, 1959	0
Separate deficit in accumulated earnings and profits of Y as of Dec. 31, 1959	60,000

Example (4). (i) M and N Corporations make their returns on the basis of the calendar year. On June 30, 1959, M Corporation transfers all its assets to N Corporation in a statutory merger to which section 361 applies. The books of the two corporations reveal the following information:

Description	M Corporation (transferor)	N Corporation (acquirer)
Accumulated earnings and profits at close of calendar year 1958	$100,000	$50,000
Earnings and profits for taxable year ending June 30, 1959	10,000	.....
Deficit in earnings and profits for calendar year 1959	.....	146,000
Distributions during calendar year 1959	0	0

(ii) Assuming that N has not shown its actual accumulated earnings and profits, or deficit, as of the close of June 30, 1959, N has a deficit in accumulated earnings and profits at such time which amounts to $22,400, determined as follows:

Accumulated earnings and profits of N as of close of 1958	$50,000
Less:	
Portion of deficit in earnings and profits of N for 1959 deemed to have accumulated as of close of June 30, 1959 ($146,000×181/365)	72,400
Deficit in accumulated earnings and profits of N as of close of June 30, 1959, and also as of Dec. 31, 1959	22,400

As of the close of June 30, 1959, N acquires from M accumulated earnings and profits in the amount of $110,000, no part of which may be offset by N's own deficit of $22,400; however, such earnings and profits may be offset by deficits incurred, or deemed incurred, by N after June 30, 1959. Thus, as of December 31, 1959, N has the above-mentioned deficit of $22,400; at such time N also has accumulated earnings and profits in the amount of $36,400, determined as follows:

Accumulated earnings and profits acquired from M as of close of June 30, 1959	$110,000
Less:	
Portion of deficit in earnings and profits of N for 1959 deemed to have accumulated after June 30, 1959 ($146,000×184/365)	73,600
Accumulated earnings and profits of N as of Dec. 31, 1959	36,400

Example (5). Assume the same facts as in *Example (4)*, except that on September 9, 1959, N Corporation makes a cash distribution of $100,000. The amount of $82,000 is a dividend from accumulated earnings and profits, computed as follows:

Accumulated earnings and profits acquired from M as of close of June 30, 1959	$110,000
Less:	
Deficit in earnings and profits of N for 1959 deemed to have accumulated from June 30 through Sept. 8, 1959 ($146,000×70/365)	28,000
Accumulated earnings and profits as of close of Sept. 8, 1959	82,000

As of December 31, 1959, N Corporation has a deficit in accumulated earnings and profits of $68,000, computed as follows:

Deficit in accumulated earnings and profits of N as of close of June 30, 1959	$22,400
Add:	
Portion of N's deficit in earnings and profits for 1959 deemed to have accumulated after Sept. 8, 1959 ($146,000×114/365)	45,600
Deficit in accumulated earnings and profits of N as of Dec. 31, 1959	68,000

Example (6). (i) X, Y, and Z Corporations make their returns on the basis of the calendar year. On June 30, 1959, X Corporation and Y Corporation transfer all their assets to Z Corporation in a statutory merger to which section 361 applies. The books of the three corporations reveal the following information:

Description	X Corporation (transferor)	Y Corporation (transferor)	Z Corporation (acquirer)
Accumulated earnings and profits (or deficit) at close of calendar year 1958	$35,000	($25,000)	($20,000)
Earnings and profits (or deficit) for taxable year ended June 30, 1959	5,000	(5,000)	.....
Earnings and profits for calendar year 1959	.....	.....	36,500
Distributions during 1959	0	0	0

(ii) As of the close of June 30, 1959, Z acquires from Y a deficit in accumulated earnings and profits of $30,000. As of such time, Z's own deficit in accumulated earnings and profits amounts to $1,900, determined as follows:

Deficit in accumulated earnings and profits of Z as of close of 1958	$20,000
Less:	
Portion of undistributed earnings and profits of Z for 1959 deemed to have accumulated as of close of June 30, 1959 ($36,500×181/365)	18,100
Deficit in accumulated earnings and profits as of close of June 30, 1959	1,900

The total deficit of $31,900 may be used only to offset earnings and profits of Z accumulated, or deemed to have accumulated, after June 30, 1959; such deficit may not be used to reduce the accumulated earnings and profits of $40,000 acquired from X as of the close of June 30, 1959. Thus, as of December 31, 1959, the accumulated earnings and profits of Z amount to $40,000; at such time Z Corporation also has a separate deficit in accumulated earnings and profits in the amount of $13,500, determined as follows:

Deficit in accumulated earnings and profits as of close of June 30, 1959	$31,900
Less:	
Portion of undistributed earnings and profits of Z for 1959 deemed to have accumulated after June 30, 1959 ($36,500×184/365)	18,400
Separate deficit in accumulated earnings and profits as of Dec. 31, 1959	13,500

Example (7). X and Y Corporations make their returns on the basis of the calendar year. On December 31, 1954, X transfers all its assets to Y in a statutory merger to which section 361 applies. The books of the two corporations reveal the following information:

Description	X Corporation (transferor)	Y Corporation (acquirer)
Accumulated earnings and profits (or deficit) at close of calendar year 1954	($50,000)	$210,000
Earnings and profits (or deficit) for calendar year:		
1955		5,000
1956		(20,000)
1957		70,000
1958		60,000
1959		55,000
Cash distributions on:		
Sept. 1, 1957		80,000
Sept. 1, 1958		40,000
Sept. 1, 1959		30,000

The balances in the accumulated earnings and profits account and the separate deficit account of Y Corporation at the close of the taxable year involved are as follows:

Year	Deficit acquired from X Corporation	Accumulated earnings and profits of Y Corporation
1954	$50,000	$210,000
1955	45,000	210,000
1956	45,000	190,000
1957	45,000	180,000
1958	25,000	180,000
1959	None	180,000

(b) *Successive acquisitions.* (1) If, as of the date of distribution or transfer, either the acquiring corporation, or the distributor or transferor corporation, or both, is considered under paragraph (a) of this section to be maintaining separate earnings and profits accounts as the result of a prior transaction or transactions to which section 381(a) applied, the accumulated earnings and profits, or deficit in accumulated earnings and profits, of each such corporation shall be combined with the appropriate earnings and profits account of the other such corporation. For example, if, as of the date of transfer, the acquiring corporation and the transferor corporation are each maintaining separate accounts, one containing accumulated earnings and profits and the other containing a deficit in accumulated earnings and profits, the amounts in the two accumulated earnings and profits accounts shall be combined into one account, and the amounts in the two deficit accounts shall be combined into a second account, and the amount in one combined account may not be used to offset the amount in the other combined account.

(2) This paragraph may be illustrated by the following examples, in which it is assumed that none of the accumulated earnings and profits, or deficits, consist of earnings and profits or deficits accumulated, or increase in value of property accrued, before March 1, 1913.

Example (1). (i) X, Y, and Z Corporations make their returns on the basis of the calendar year. On June 30, 1958, X Corporation transfers all its assets to Z Corporation in a statutory merger to which section 361 applies, and on August 31, 1958, Y Corporation transfers all its assets to Z Corporation in another statutory merger to which section 361 applies. The books of the three corporations reveal the following information:

Description	X Corporation (transferor)	Y Corporation (transferor)	Z Corporation (acquirer)
Accumulated earnings and profits (deficit) at close of calendar year 1957	($40,000	$10,000	$60,000
Deficit in earnings and profits for taxable year ending June 30, 1958	(5,000)	.....	.....
Earnings and profits for taxable year ending Aug. 31, 1958	.....	2,000	.....
Earnings and profits of calendar year 1958	.....	.....	36,500
Distributions during calendar year 1958	0	0	0

(ii) As of the close of June 30, 1958, Z acquires from X a deficit in accumulated earnings and profits in the amount of $45,000, which deficit may be used only to reduce those earnings and profits of Z which are accumulated, or deemed to have been accumulated, after June 30, 1958. As of the close of August 31, 1958, Z acquires from Y earnings and profits of $12,000, no portion of which may be reduced by the deficit acquired by Z from X. Accordingly, as of December 31, 1958, Z has accumulated earnings and profits of $90,100, and also has a separate deficit in accumulated earnings and profits of $26,600. These amounts are determined as follows:

Accumulated earnings and profits of Z as of Dec. 31, 1957	$60,000
Add:	
Portion of undistributed earnings and profits of Z for 1958 deemed to have accumulated as of close of June 30, 1958 ($36,500×181/365)	18,100
Accumulated earnings and profits of Z as of June 30, 1958	78,100
Add:	
Accumulated earnings and profits acquired by Z from Y as of close of Aug. 31, 1958	12,000
Accumulated earnings and profits of Z as of close of Aug. 31, 1958, and also as of Dec. 31, 1958	90,100
Deficit in accumulated earnings and profits acquired by Z from X as of close of June 30, 1958	45,000
Less:	
Portion of undistributed earnings and profits of Z for 1958 deemed to have accumulated from June 30 through Aug. 31, 1958 ($36,500×62/365)	6,200
Separate deficit in accumulated earnings and profits of Z as of Aug. 31, 1958	38,800
Less:	
Portion of undistributed earnings and profits of Z for 1958 deemed to have accumulated after Aug. 31, 1958 ($36,500×122/365)	12,200
Separate deficit in accumulated earnings and profits of Z as of Dec. 31, 1958	26,600

Example (2). (i) Assume the same facts as in *Example (1),* plus the additional fact that on June 30, 1959, Z Corporation transfers all its assets to M Corporation (which makes its return on the basis of the calendar year) in a statutory merger to which section 361 applies, and that as of such time M Corporation is considered to be maintaining separate earnings and profits accounts as the result of a previous transaction to which section 381(a) applied. The books of the two corporations reveal the following information:

Description	Z Corporation (transferor)	M Corporation (acquirer)
Accumulated earnings and profits as of Dec. 31, 1958	$90,100	$50,000
Separate deficit in accumulated earnings and profits as of Dec. 31, 1958	26,600	30,000
Earnings and profits for taxable year ending June 30, 1959	5,000	.....
Earnings and profits of calendar year 1959	.....	36,500
Distributions during 1959	0	0

(ii) As of June 30, 1959, M acquires from Z accumulated earnings and profits of $90,100, which amount is combined with M's own accumulated earnings and profits of $50,000; M also acquires from Z a deficit in accumulated earnings and profits of $21,600 ($26,600 minus $5,000), which amount is combined with M's own deficit of $11,900. The total deficit of $33,500 may be used only to reduce earnings and profits of M which are accumulated, or deemed to have accumulated, after June 30, 1959. Accordingly, as of December 31, 1959, M has accumulated earnings and profits of $140,100, and also has a separate deficit in accumulated earnings and profits in the amount of $15,100. These amounts are determined as follows:

Deficit of M as of Dec. 31, 1958	$30,000
Less:	
Portion of M's undistributed earnings and profits for 1959 deemed to have accumulated as of close of June 30, 1959 ($36,500×181/365)	18,100
Deficit of M as of June 30, 1959	11,900
Plus:	
Deficit of Z as of June 30, 1959	21,600
Combined deficit of M as of close of June 30, 1959	33,500
Less:	
Portion of M's undistributed earnings and profits for 1959 deemed to have accumulated after June 30, 1959 ($36,500×184/365)	18,400

Separate deficit of M as of Dec. 31, 1959	15,100
Accumulated earnings and profits of M as of Dec. 31, 1958, and also as of June 30, 1959	50,000
Accumulated earnings and profits of Z as of Dec. 31, 1958, and also as of June 30, 1959	90,100
Combined accumulated earnings and profits of M as of close of June 30, 1959, and also as of Dec. 31, 1959	140,100

(c) *Distribution of earnings and profits pursuant to reorganization or liquidation.* (1) If, in a reorganization to which section 381(a)(2) applies, the transferor corporation pursuant to the plan of reorganization distributes to its stockholders property consisting not only of property permitted by section 354 to be received without recognition of gain, but also of other property or money, then the accumulated earnings and profits of the transferor corporation as of the close of the date of transfer shall be computed by taking into account the amount of earnings and profits properly applicable to the distribution, regardless of whether such distribution occurs before or after the close of the date of transfer.

(2) If, in a distribution to which section 381(a)(1) (relating to certain liquidations of subsidiaries) applies, the acquiring corporation receives less than 100 percent of the assets distributed by the distributor corporation, then the accumulated earnings and profits of the distributor corporation as of the close of the date of distribution shall be computed by taking into account the amount of earnings and profits properly applicable to the distributions to minority stockholders, regardless of whether such distributions occur before or after the close of the date of distribution.

(d) *Treatment of earnings and profits where assets are transferred to a corporation controlled by the acquiring corporation.* If, pursuant to the provisions of paragraph (b)(2) of § 1.381(a)–1, a corporation is considered to be the acquiring corporation even though a part of the acquired assets is transferred to one or more corporations controlled by the acquiring corporation, or all the acquired assets are transferred to two or more corporations controlled by the acquiring corporation, then whether any portion of the earnings and profits received by the acquiring corporation under section 381(c)(2) is allocable to such controlled corporation or corporations shall be determined without regard to section 381. See paragraph (a) of § 1.312–11.

[T.D. 6586, 26 FR 12550, Dec. 28, 1961, as amended by T.D. 6692, 28 FR 12817, Dec. 3, 1963]

§ 1.381(c)(3)–1 Capital loss carryovers.

(a) *Carryover requirement.* (1) Section 381(c)(3) requires the acquiring corporation in a transaction to which section 381(a) applies to succeed to, and take into account, the capital loss carryovers of the distributor or transferor corporation. To determine the amount of these carryovers as of the close of the date of distribution or transfer, and to integrate them with the capital loss carryovers of the acquiring corporation for purposes of determining the taxable income of the acquiring corporation for taxable years ending after the date of distribution or transfer, it is necessary to apply the provisions of section 1212 in accordance with the conditions and limitations of section 381(c)(3) and this section.

(2) The capital loss carryovers of the acquiring corporation as of the close of the date of distribution or transfer shall be determined without reference to any capital gains or capital losses of the distributor or transferor corporation. The capital loss carryovers of a distributor or transferor corporation as of the close of the date of distribution or transfer shall be determined without reference to any capital gains or capital losses of the acquiring corporation.

(3) This section contains rules applicable to capital loss carryovers determined without reference to the amendment of section 1212(a) made by section 7 of the Act of September 2, 1964 (Public Law 88–571, 78 Stat. 860) in respect of foreign expropriation capital losses. If the distributor, transferor, or acquiring corporation sustains a net capital loss in a taxable year ending after December 31, 1958, any portion of which is attributable to a foreign expropriation capital loss, such portion shall be carried over to each of the ten succeeding taxable years consistently with the rules prescribed in this section and paragraph (a)(2) of § 1.1212–1.

(b) *First taxable year to which carryovers apply.* (1) The capital loss carryovers available to the distributor or transferor corporation as of the close of the date of distribution or transfer shall first be carried to the first taxable year of the acquiring corporation ending after that date. This rule applies irrespective of whether the date of distribution or transfer is on the last day, or any other day, of the acquiring corporation's taxable year.

(2) The capital loss carryovers available to the distributor or transferor corporation as of the close of the date of distribution or transfer shall be carried to the acquiring corporation without diminution by reason of the fact that the acquiring corporation does not acquire 100 percent of the assets of the distributor or transferor corporation.

(c) *Limitation on capital loss carryovers for first taxable year ending after date of distribution or transfer.* (1) Any capital loss carryover of a distributor or transferor corporation which is available to the acquiring corporation as of the close of the date of distribution or transfer shall be a short-term capital loss of the acquiring corporation in each of the taxable years to which the net capital loss giving rise to such carryover may be carried to the extent provided in section 1212 and this section. However, in the first taxable year of the acquiring corporation ending after the date of distribution or transfer, the total capital loss carryovers of the distributor or transferor corporation which may be treated in that year as short-term capital losses of the acquiring corporation is limited by section 381(c)(3)(B) to an amount which bears the same ratio to the acquiring corporation's capital gain net income (net capital gain for taxable years beginning before January 1, 1977) for such first taxable year (determined without regard to any capital loss carryovers) as the number of days in such first taxable year which follow the date of distribution or transfer bears to the total number of days in such taxable year. Thus, if the date of distribution or transfer is the last day of the acquiring corporation's taxable year, there is no limitation under section 381(c)(3)(B) on the amount of such carryovers which may be treated as short-term capital losses of the acquiring corporation for its first taxable year ending after that date.

(2) The limitation provided by section 381(c)(3)(B) shall be applied to the aggregate of the capital loss carryovers of the distributor or transferor corporation without reference to the taxable years in which the net capital losses giving rise to the carryovers were sustained. If the acquiring corporation has acquired the assets of two or more distributor or transferor corporations on the same date of distribution or transfer, then the limitation provided by section 381(c)(3)(B) shall be applied to the aggregate of the capital loss carryovers from all of such distributor or transferor corporations.

(3) If the acquiring corporation succeeds to the capital loss carryovers of two or more distributor or transferor corporations on two or more dates of distribution or transfer during the same taxable year of the acquiring corporation, the limitation to be applied under section 381(c)(3)(B) to the aggregate of such carryovers shall be determined consistently with the rules prescribed in paragraph (b) of § 1.381(c)(1)–2.

(4) The application of this paragraph may be illustrated by the following example:

Example. (i) X and Y Corporations are organized on January 1, 1954, and make their returns on the basis of the calendar year. On July 4, 1957, X Corporation transfers all its assets to Y Corporation in a statutory merger to which section 361 applies. The net capital losses and the net capital gains (capital gain net income for taxable years beginning after Dec. 31, 1976), (computed without regard to any capital loss carryovers) of the two corporations are as follows:

Taxable year	X Corporation (transferor)	Y Corporation (acquirer)
1954	($5,000)	0
1955	(10,000)	$5,000
1956	(25,000)	(7,000)
Ending 7–4–57	(8,000)	.....
1957	.....	36,500

(ii) The capital loss carryovers of X Corporation which are available to Y Corporation as of the close of July 4, 1957, amount to $48,000 in the aggregate; but only $18,000 ($36,500 × 180/365) of such amount may be treated as short-term capital losses of Y Corporation for 1957.

(d) *Computation of carryovers; general rule*—(1) *Sequence for applying losses and determination of capital gain net income.* Section 1212 provides that a net capital loss sustained in any taxable year (hereinafter referred to as the ''loss year'') shall be carried over to each of the five succeeding taxable years and treated in each of such succeeding years as a short-term capital loss to the extent not allowed as a deduction against any capital gain net income (net capital gain for taxable years beginning before January 1, 1977) of any taxable years intervening between the loss year and the taxable year to which such loss is carried. For this purpose, the capital gain net income (net capital gain for taxable years beginning before January 1, 1977) of any intervening taxable year is determined without regard to the net capital loss for the loss year or for any taxable year thereafter, and the various capital loss carryovers from taxable years preceding the loss year to any such intervening taxable year are considered to be applied in reduction of the capital gain net income (net capital gain for taxable years beginning before January 1, 1977) for such year in the order of the taxable years in which the losses were sustained, beginning with the loss for the earliest preceding taxable year. The application of these rules to the capital gain net income (net capital gain for taxable years beginning before January 1, 1977) of the acquiring corporation for any taxable year ending after the date of distribution or transfer involves the use of carryovers of the distributor or transferor corporation and of the acquiring corporation. In determining the order in which the capital loss carryovers of the distributor or transferor and acquiring corporations from taxable years ending on or before the date of distribution or transfer are considered to be applied in reduction of the capital gain net income (net capital gain for taxable years beginning before January 1, 1977) of the acquiring corporation for any intervening taxable year ending after such date, the following rules shall apply:

(i) Each taxable year of the distributor or transferor and acquiring corporations which, with respect to the first taxable year of the acquiring corporation ending after the date of distribution or transfer, constitutes a first preceding taxable year, shall be treated as if each such year ended on the same day, whether or not such taxable years actually end on the same day. In like manner, each taxable year of the distributor or transferor and acquiring corporations which, with respect to such first taxable year of the acquiring corporation ending after the date of distribution or transfer, constitutes a second preceding taxable year, shall be treated as if each such year ended on the same day (whether or not such taxable years actually end on the same day), and a similar rule shall be applied with respect to those taxable years of the distributor or transferor and acquiring corporations which constitute third, fourth, and fifth preceding taxable years;

(ii) If in the same preceding taxable year both the distributor or transferor and acquiring corporations incurred a net capital loss which is a carryover to an intervening taxable year of the acquiring corporation ending after the date of distribution or transfer, then in applying such losses in reduction of the capital gain net income (net capital gain for taxable years beginning before January 1, 1977) for such an intervening year, either such loss may be taken into account before the other; and

(iii) The rules of subdivisions (i) and (ii) of this subparagraph shall apply regardless of the number of distributor or transferor corporations the assets of which are acquired by the acquiring corporation on the same date of distribution or transfer.

(2) *Cross reference.* If the date of distribution or transfer is a day other than the last day of a taxable year of the acquiring corporation, then in determining the capital gain net income (net capital gain for taxable years beginning before January 1, 1977) of the acquiring corporation for its first taxable year ending after the date of distribution or transfer, section 1212 and this paragraph shall be applied in the special manner set forth in paragraph (e) of this section.

(3) *Years to which losses may be carried.* The taxable years to which a net

capital loss shall be carried are prescribed by section 1212. Since the taxable year of a distributor or transferor corporation ends with the close of the date of distribution or transfer, such taxable year and the first taxable year of the acquiring corporation which ends after that date are considered two separate taxable years to which a net capital loss of the distributor or transferor corporation for any taxable year ending before that date shall be carried. This rule applies even though the taxable year of the distributor or transferor corporation which ends on the date of distribution or transfer is a period of less than twelve months. However, the distribution or transfer has no effect in determining under section 1212 the taxable years to which a net capital loss of the acquiring corporation is carried. For this purpose, the first taxable year of the acquiring corporation which ends after the date of distribution or transfer constitutes only one taxable year even though such taxable year is considered under paragraph (e) of this section as two taxable years for certain purposes. The application of this subparagraph may be illustrated by the following example:

Example. R and S Corporations are organized on January 1, 1954, and both corporations make their returns on the basis of the calendar year. R Corporation has net capital losses for its years 1954, 1955, and 1957, and S Corporation has net capital losses for its years 1954 and 1956. On June 30, 1958, R Corporation transfers all its assets to S Corporation in a statutory merger to which section 361 applies. The taxable years to which these losses of R and S Corporations may be carried are as follows:

Loss year	Carried to
R1954	R1955, R1956, R1957, R6/30/58, S1958.
S1954	S1955, S1956, S1957, S1958, S1959.
R1955	R1956, R1957, R6/30/58, S1958, S1959.
S1956	S1957, S1958, S1959, S1960, S1961.
R1957	R6/30/58, S1958, S1959, S1960, S1961.

(4) *Computation of carryovers in case where date of distribution or transfer occurs on last day of acquiring corporation's taxable year.* The computation of the capital loss carryovers from the distributor or transferor corporation and from the acquiring corporation in a case where the date of distribution or transfer occurs on the last day of a taxable year of the acquiring corporation may be illustrated by the following example:

Example. X and Y Corporations are organized on January 1, 1955, and make their returns on the basis of the calendar year. On December 31, 1956, X Corporation transfers all its assets to Y Corporation in a statutory merger to which section 361 applies. The net capital losses and the net capital gains (capital gain net income for taxable years beginning after December 31, 1976), (computed without regard to any capital loss carryovers) of the two corporations are as follows:

Taxable year	X Corporation (transferor)	Y Corporation (acquirer)
1955	($20,000)	($2,000)
1956	(10,000)	(8,000)
1957	.....	25,000
1958	.....	10,000

The sequence in which the net capital losses of X and Y Corporations are applied, and the computation of the capital loss carryovers to Y Corporation's taxable year 1959, may be illustrated as follows. (For purposes of this example, the carryover from a preceding taxable year of the transferor corporation will be applied before the carryover from the same preceding taxable year of the acquiring corporation):

(i) *X Corporation's 1955 loss.* The carryover to 1959 is $0, computed as follows:

Net capital loss	$20,000
Less: Y's 1957 net capital gain (computed without regard to any capital loss carryovers)	25,000
Carryover to Y 1958 and Y 1959	0

(ii) *Y Corporation's 1955 loss.* The carryover to 1959 is $0, computed as follows:

Net capital loss		$2,000
Less:		
Y's 1957 net capital gain (computed without regard to any capital loss carryovers)	$25,000	
Minus capital loss carryovers to Y 1957 (i.e., carryover of $20,000 from X 1955)	20,000	
		5,000
Carryover to Y 1958 and Y 1959		0

(iii) *X Corporation's 1956 loss.* The carryover to 1959 is $0, computed as follows:

Net capital loss		$10,000
Less:		
Y's 1957 net capital gain (computed without regard to any capital loss carryovers)	$25,000	

Minus capital loss carryovers to Y 1957 (i.e., carryovers of $20,000 from X 1955 and $2,000 from Y 1955)	22,000	
		3,000
Carryover to Y 1958		7,000
Less:		
Y's 1958 net capital gain (computed without regard to any capital loss carryovers)	$10,000	
Minus capital loss carryovers to Y 1958	0	
		10,000
Carryover to Y 1959		0

(iv) *Y Corporation's 1956 loss.* The carryover to 1959 is $5,000, computed as follows:

Net capital loss		$8,000
Less:		
Y's 1957 net capital gain (computed without regard to any capital loss carryovers)	$25,000	
Minus capital loss carryovers to Y 1957 (i.e., carryovers of $20,000 from X 1955, $2,000 from Y 1955, and $10,000 from X 1956)	32,000	
		0
Carryover to Y 1958		8,000
Less:		
Y's 1958 net capital gain (computed without regard to any capital loss carryovers)	$10,000	
Minus capital loss carryovers to Y 1958 (i.e., carryover of $7,000 from X 1956)	7,000	
		3,000
Carryover to Y 1959		5,000

(e) *Computation of carryovers when date of distribution or transfer is not on last day of acquiring corporation's taxable year*—(1) *General rule.* If, in determining under paragraph (d) of this section the portion of a net capital loss for any taxable year which is carried over to a succeeding taxable year, an intervening taxable year is a taxable year of the acquiring corporation which includes, but does not end on, the date of distribution or transfer, the capital gain net income (net capital gain for taxable years beginning before January 1, 1977) of such intervening year shall be determined by applying section 1212 in the special manner provided by this paragraph.

(2) *Taxable year considered as two taxable years.* Such intervening taxable year of the acquiring corporation shall be considered as though it were two taxable years, but only for the limited purpose of computing capital loss carryovers to subsequent taxable years. The first of such two taxable years shall be referred to in this paragraph as the preacquisition part year; the second, as the postacquisition part year. Though considered as two separate taxable years for purposes of this paragraph, the preacquisition part year and the postacquisition part year are treated as one taxable year in determining the years to which a net capital loss is carried under section 1212. See paragraph (d)(3) of this section.

(3) *Preacquisition part year.* The preacquisition part year shall begin with the beginning of such taxable year of the acquiring corporation and shall end with the close of the date of distribution or transfer.

(4) *Postacquisition part year.* The postacquisition part year shall begin with the day following the date of distribution or transfer and shall end with the close of such taxable year of the acquiring corporation.

(5) *Division of capital gain net income.* The capital gain net income (net capital gain for taxable years beginning before January 1, 1977) for such intervening taxable year (computed without regard to any capital loss carryovers) of the acquiring corporation shall be divided between the preacquisition part year and the postacquisition part year in proportion to the number of days in each. Thus, if in a statutory merger to which section 361 applies Y Corporation acquires the assets of X Corporation on June 30, 1956, and Y Corporation has net capital gain (computed in the manner so prescribed) of $36,600 for its calendar year 1956, then the preacquisition part year capital gain net income (net capital gain for taxable years beginning before January 1, 1977) would be $18,200 ($36,600×182/366) and the postacquisition part year capital gain net income (net capital gain for taxable years beginning before January 1, 1977) would be $18,400 ($36,600×184/366).

(6) *Application of capital loss carryovers.* After obtaining the capital gain net income (net capital gain for taxable years beginning before January 1, 1977) of the preacquisition part year and postacquisition part year in the

manner described in subparagraph (5) of this paragraph, it is necessary to determine the capital loss carryovers which are taken into account with respect to each such part year. The carryovers to be taken into account and the sequence in which such carryovers are applied, shall be determined in accordance with paragraph (d)(1) of this section but subject to the provisions of this subparagraph. With respect to the preacquisition part year, no capital loss carryovers of the distributor or transferor corporation shall be taken into account; that is, only capital loss carryovers of the acquiring corporation shall be taken into account. With respect to the postacquisition part year, capital loss carryovers of both the distributor or transferor corporation and the acquiring corporation shall be taken into account.

(7) *Cross reference.* If an intervening taxable year is a taxable year of the acquiring corporation during which the acquiring corporation succeeds to the capital loss carryovers of two or more distributor or transferor corporations on two or more dates of distribution or transfer, the capital gain net income (net capital gain for taxable years beginning before January 1, 1977) of the acquiring corporation for such intervening taxable year shall be determined consistently with the rules prescribed in paragraph (c) of § 1.381(c)(1)–2, except that the sequence in which the capital loss carryovers of the distributor or transferor and acquiring corporations shall be applied shall be determined under paragraph (d)(1) of this section.

(8) *Illustration.* The application of this paragraph may be illustrated as follows:

Example. X Corporation is organized on April 1, 1959, and makes its return on the basis of the fiscal year ending March 31. Y Corporation is organized on January 1, 1959, and makes its return on the basis of the calendar year. On June 30, 1961, X Corporation transfers all its assets to Y Corporation in a statutory merger to which section 361 applies. The net capital losses and the net capital gains (capital gain net income for taxable years beginning after December 31, 1976) (computed without regard to any capital loss carryovers) of the two corporations are as follows:

Taxable year	X Corporation (transferor)	Y Corporation (acquirer)
1959	.....	($24,000)
Ending 3–31–60	($19,000)	.....
1960	.....	(6,000)
Ending 3–31–61	(5,000)	.....
Ending 6–30–61	0	.....
1961	.....	36,500
1962	.....	12,000

The following table shows those taxable years of the transferor and acquiring corporations which, with respect to Y Corporation's calendar year 1961, are first, second, and third preceding taxable years:

Taxable year	X Corporation (transferor)	Y Corporation (acquirer)
First preceding year	Ending June 30, 1961	1960
Second preceding year	Ending March 31, 1961	1959
Third preceding year	Ending March 31, 1960	.....

The sequence in which the net capital losses of X and Y Corporations are applied, and the computation of the capital loss carryovers to Y Corporation's calendar year 1963, may be illustrated as follows. (For purposes of this example, the carryover from a preceding taxable year of the acquiring corporation will be applied before the carryover from the same preceding taxable year of the transferor corporation):

(i) *X Corporation's 3/31/60 loss.* The carryover to 1963 is $0, computed as follows:

Net capital loss	$19,000
Less: Y's postacquisition part year net capital gain computed under subparagraph (5) of this paragraph ($36,500× 184/365)	18,400
Carryover to Y 1962	600
Less: Y's 1962 net capital gain (computed without regard to any capital loss carryovers)	12,000
Carryover to Y 1963	0

(ii) *Y Corporation's 1959 loss.* The carryover to 1963 is $0, computed as follows:

Net capital loss		$24,000
Less: Y's preacquisition part year net capital gain computed under subparagraph (5) of this paragraph ($36,500× 181/365)		18,100
Carryover to Y's postacquisition part year		5,900
Less:		
Y's postacquisition part year net capital gain computed under subparagraph (5) of this paragraph	$18,400	
Minus capital loss carryovers to postacquisition part year (i.e., carryover of $19,000 from X 3/31/60)	19,000	0
Carryover to Y 1962		5,900

Less:		
Y's 1962 net capital gain (computed without regard to any capital loss carryovers)	$12,000	.....
Minus capital loss carryovers to Y 1962 (i.e., carryover of $600 from X 3/31/60)	600	11,400
Carryover to Y 1963		0

(iii) *X Corporation's 3/31/61 loss.* The carryover to 1963 is $0, computed as follows:

Net capital loss		$5,000
Less:		
Y's postacquisition part year net capital gain computed under subparagraph (5) of this paragraph	$18,400	
Minus capital loss carryovers to postacquisition part year (i.e., carryovers of $19,000 from X 3/31/60 and $5,900 from Y 1959)	24,900	
		0
Carryover to Y 1962		5,000
Less:		
Y's 1962 net capital gain (computed without regard to any capital loss carryovers)	$12,000	
Minus capital loss carryovers to Y 1962 (i.e., carryovers of $600 from X 3/31/60 and $5,900 from Y 1959)	6,500	
		5,500
Carryover to Y 1963		0

(iv) *Y Corporation's 1960 loss.* The carryover to 1963 is $5,500, computed as follows:

Net capital loss		$6,000
Less:		
Y's preacquisition part year net capital gain computed under subparagraph (5) of this paragraph	$18,100	
Minus capital loss carryovers to preacquisition part year (i.e., carryover of $24,000 from Y 1959)	24,000	
		0
Carryover to Y's postacquisition part year		6,000
Less:		
Y's postacquisition part year net capital gain computed under subparagraph (5) of this paragraph	$18,400	
Minus capital loss carryovers to postacquisition part year (i.e., carryovers of $19,000 from X 3/31/60, $5,900 from Y 1959, and $5,000 from X 3/31/61) ..	29,900	0
		0
Carryover to Y 1962		6,000
Less:		
Y's 1962 net capital gain (computed without regard to any capital loss carryovers)	$12,000	
Minus capital loss carryovers to Y 1962 (i.e., carryovers of $600 from X 3/31/60, $5,900 from Y 1959, and $5,000 from X 3/31/61)	11,5000	
		$500
Carryover to Y 1963		5,500

(f) *Successive acquiring corporations.* An acquiring corporation which, in a transaction to which section 381(a) applies, acquires the assets of a distributor or transferor corporation which previously acquired the assets of another corporation in a transaction to which section 381(a) applies, shall succeed to and take into account, subject to the conditions and limitations of sections 1212 and 381, the capital loss carryovers available to the first acquiring corporation under sections 1212 and 381.

[T.D. 6552, 26 FR 1985, Mar. 8, 1961, as amended by T.D. 6867, 30 FR 15094, Dec. 12, 1965; T.D. 7728, 45 FR 72650, Nov. 3, 1980]

§ 1.381(c)(4)–1 Method of accounting.

(a) *Carryover requirement*—(1) *General rule.* (i) Section 381(c)(4) provides that, in a transaction to which section 381(a) applies, an acquiring corporation shall use the same method of accounting used by the distributor or transferor corporation on the date of distribution or transfer unless different methods of accounting were used on that date by several distributor or transferor corporations or by a distributor or transferor corporation and the acquiring corporation. If different methods of accounting were used, the acquiring corporation shall use the method or combination of methods of accounting adopted pursuant to this section.

(ii) The acquiring corporation shall take into its accounts the dollar balances of those accounts of the distributor or transferor corporation representing items of income or deduction which, because of its method of accounting, were not required or permitted to be included or deducted by the distributor or transferor corporation in computing taxable income for taxable years ending on or before the date of distribution or transfer. The acquiring corporation shall similarly

take into its accounts the dollar balances of those accounts of the distributor or transferor corporation which represents reserves in respect of which the distributor or transferor corporation has taken a deduction for taxable years ending on or before the date of distribution or transfer. The acquiring corporation shall also take into its accounts the dollar balance of that account of the distributor or transferor corporation which represents a suspense account established by the distributor or transferor corporation under section 166(f)(4) in taxable years ending on or before the date of distribution or transfer. Items of income and deduction shall have the same character in the hands of the acquiring corporation as they would have had in the hands of the distributor or transferor corporation or corporations if no distribution or transfer had occurred. This section shall have no application to items of income or deduction, or dollar balances, to the extent they are attributable to assets or liabilities not distributed or transferred, and shall have no application to items the tax treatment of which is specifically provided for in other paragraphs of section 381(c). In the case of an obligation of the distributor or transferor corporation which is assumed by the acquiring corporation and which gives rise to a liability (within the meaning of paragraph (a)(4) of § 1.381(c)(16)–1) after the date of distribution or transfer, the deductibility of such an item is determined under this section if it is not deductible under section 381(c)(16) and the regulations thereunder. The amount of the adjustments necessary to reflect a change in accounting method pursuant to this section, the manner in which they are to be taken into account, and the tax attributable thereto shall be determined and computed under section 481 and the regulations thereunder, subject to the rules provided in paragraphs (c) and (d) of this section. Where such change is a change from the accrual to the installment method by a dealer in personal property, section 453(c) and the regulations thereunder apply.

(2) *Rules of application.* For purposes of section 381(c)(4) and this section, the term *method of accounting* shall have the same meaning as that provided under section 446 and the regulations thereunder. This section shall not be construed as preventing the exercise of any election which may be made by the acquiring corporation without consent of the Commissioner, or preventing the application of section 269 or 482, or the regulations thereunder. For provisions defining the date of distribution or transfer, see paragraph (b) of § 1.381(b)–1. See other paragraphs of section 381(c) and the regulations thereunder for other rules regarding the treatment of the carryover of certain items specifically enumerated therein.

(b) *Conditions for continuation of methods of accounting*—(1) *No differences in methods of accounting.* If all the parties to a section 381(a) transaction used the same method of accounting on the date of distribution or transfer, the acquiring corporation shall continue to use such method of accounting, unless the acquiring corporation has obtained the consent of the Commissioner in accordance with paragraph (e) of § 1.446–1 to use a different method of accounting. This subparagraph may be illustrated by the following examples:

Example (1). X Corporation and Y Corporation use the accrual method as their overall method of accounting. Both corporations have established a reserve for bad debts under section 166(c). Pursuant to elections made by each corporation, they are amortizing trademark and trade name expenditures over a 60-month period under section 177, expensing intangible drilling and development costs under section 263(c), and accruing real property taxes ratably under section 461(c). It is assumed that there are no other items to which paragraph (a) of this section might apply. Y Corporation acquires all of the assets of X Corporation in a transaction to which section 381(a) applies. On and after the date of distribution or transfer Y Corporation must continue, without further election, to use the same overall method of accounting and the same accounting treatment of the specified items, unless consent of the Commissioner is obtained in accordance with paragraph (e) of § 1.446–1 to change the methods of accounting. Thus, Y Corporation shall carry over the balance in X Corporation's reserve for bad debts account, shall continue to amortize and deduct over the remaining portion of the 60-month period the unamortized portion of the trademark and trade name expenditures carried over from X Corporation, and shall continue the

same treatment of intangible drilling and development costs and of real property taxes.

Example (2). M Corporation and N Corporation use the cash receipts and disbursements method of accounting. N Corporation acquires all of the assets and assumes all the obligations of M Corporation in a transaction to which section 381(a) applies. M Corporation, immediately prior to the transaction, is entitled to receive $10,000 for unbilled services performed, and has billed but not received payment for services performed in an amount of $20,000. It has received but not paid invoices amounting to $18,000, and has received services in the amount of $5,000 for which no invoices have been received. Since M Corporation and N Corporation are both on the cash receipts and disbursements method, N Corporation must continue to use that method, unless consent of the Commissioner is obtained in accordance with paragraph (e) of § 1.446–1 to change its method of accounting. Accordingly, N Corporation must include in income when received the unrealized receivables of M Corporation and may deduct the payment of those obligations of M Corporation which would have been deductible by such corporation if paid by it. Thus, N Corporation shall treat as ordinary income the receipt by it of M Corporation's $30,000 of receivables, and may deduct upon payment the amount of M Corporation's $23,000 of payables which would have been deductible by it.

Example (3). S Corporation and T Corporation are both publishers and use the accrual method as their overall method of accounting. Both corporations have elected under section 455 to defer prepaid subscription income to the taxable years during which the liability to furnish the newspaper, magazine, or other periodical exists. T Corporation, in a transaction to which section 381(a) applies, acquires all the assets of S Corporation and assumes the liability of such corporation to furnish or deliver the newspaper, magazine, or other periodical. On and after the date of the transfer, T Corporation must continue, without further election, to use the accrual method as its over-all method of accounting and to defer prepaid subscription income under section 455, unless consent of the Commissioner is obtained in accordance with paragraph (e) of § 1.446–1 to change the method of accounting. T Corporation shall carry over the closing balance of S Corporation's prepaid subscription income account. The principles in this example would be equally applicable if both corporations had been deferring prepaid subscription income under a method permitted by subsection (e) of section 455.

(2) *Separate businesses.* If, after the date of distribution or transfer, the trades or businesses of the parties to a transaction described in section 381(a) are operated as separate and distinct trades or businesses within the meaning of paragraph (d) of § 1.446–1, then the method of accounting employed by the parties to the transaction on the date of distribution or transfer with respect to each trade or business shall be used by the acquiring corporation, unless the acquiring corporation has obtained the consent of the Commissioner in accordance with paragraph (e) of § 1.446–1 to use a different method of accounting, or unless the Commissioner prescribes a different method of accounting under paragraph (b)(1) of § 1.446–1. However, if only a single method of accounting may be employed by a taxpayer with respect to a particular item regardless of the number of separate and distinct trades or businesses operated by such taxpayer, but different methods were employed by the several corporations on the date of distribution or transfer with respect to such item, then the acquiring corporation shall adopt the principal method of accounting determined under paragraph (c) of this section (see subparagraph (2)(iv) thereof) for such item, or the method of accounting determined in accordance with paragraph (d) of this section, whichever is applicable. This subparagraph may be illustrated by the following examples:

Example (1). M Corporation is engaged in a personal service business and uses the cash receipts and disbursements method of accounting. N Corporation is engaged in a retail furniture business and uses the accrual method of accounting. N Corporation acquires the assets of M Corporation in a transaction to which section 381(a) applies. In accordance with paragraph (d) of § 1.446–1, N Corporation operates as a separate and distinct trade or business the personal service business formerly operated by M Corporation. Unless consent of the Commissioner is obtained in accordance with paragraph (e) of § 1.446–1 to change the method of accounting, N Corporation shall continue to use the cash receipts and disbursements method of accounting with respect to the personal service business formerly operated by M Corporation, and shall use the accrual method of accounting with respect to the retail furniture business.

Example (2). Assume the same facts as in *Example (1),* except that M Corporation has elected under section 171 to amortize bond premium with respect to fully taxable bonds. N Corporation has not made the election to amortize bond premium with respect to such

bonds owned by it. N Corporation may not continue separate accounting methods as to amortizable bond premium but must consistently apply only a single method of accounting with respect to such bond premium since the election to amortize bond premium applies to all fully taxable bonds held by the taxpayer. N Corporation shall use the principal method of accounting determined under paragraph (c) of this section for such bond premium, unless it is determined in accordance with paragraph (d) of this section that a different method of accounting is to be used. However, if such principal or different method of accounting is not to amortize bond premium N Corporation is not precluded from making a new election to the extent permitted by section 171.

(3) *Integrated businesses.* (i) If, after the date of distribution or transfer, any of the trades or business of the parties to a transaction in section 381(a) are not operated as separate and distinct trades or businesses within the meaning of paragraph (d) of § 1.446–1, then, to the extent that the same methods of accounting were employed on the date of distribution or transfer by the parties to the transaction with respect to any trades or businesses which are integrated or are required to be integrated in accordance with section 446(d) and the regulations thereunder, the acquiring corporation shall continue to employ such methods of accounting, unless the acquiring corporation has obtained the consent of the Commissioner in accordance with paragraph (e) of § 1.446–1 to use a different method of accounting, or unless the Commissioner prescribes a different method of accounting under paragraph (b)(1) of § 1.446–1.

(ii) If, after the date of distribution or transfer, any of the trades or businesses of the parties to a transaction described in section 381(a) are not operated as separate and distinct trades or businesses within the meaning of paragraph (d) of § 1.446–1, then, to the extent that different methods of accounting were employed on the date of distribution or transfer by the parties to the transaction with respect to any trades or businesses which are integrated or required to be integrated in accordance with section 446(d) and the regulations thereunder, this paragraph shall not apply and the acquiring corporation shall adopt the principal method of accounting determined under paragraph (c) of this section or the method of accounting determined in accordance with paragraph (d) of this section, whichever is applicable.

(iii) The provisions of this subparagraph may be illustrated by the following examples:

Example (1). M Corporation and N Corporation both use the accrual method as an overall method of accounting. M Corporation has established a reserve for bad debts while N Corporation uses the specific charge-off method with respect to its bad debts. N Corporation acquires all of the assets of M Corporation in a transaction to which section 381(a) applies and integrates the business formerly operated by M Corporation into the business operated by N Corporation before the date of distribution or transfer. N Corporation shall continue to use the accrual method as its overall method of accounting, unless consent of the Commissioner is obtained in accordance with paragraph (e) of § 1.446–1 to change its method of accounting. N Corporation shall use the principal method of accounting determined under paragraph (c) of this section with respect to bad debts, or the method of accounting determined in accordance with paragraph (d) of this section, whichever is applicable.

Example (2). X Corporation conducts two separate and distinct trades or businesses, a personal service business with respect to which the cash receipts and disbursements method of accounting is used and a manufacturing business with respect to which the accrual method of accounting is used. Y Corporation conducts a manufacturing business and uses the accrual method of accounting. Y Corporation acquires all of the assets of X Corporation in a transaction to which section 381(a) applies. After the date of distribution or transfer, Y integrates the manufacturing business formerly operated by X Corporation into the manufacturing business operated by it and continues to operate as a separate and distinct trade or business the personal service business formerly operated by X Corporation. Unless consent of the Commissioner is obtained in accordance with paragraph (e) of § 1.446–1 to change the method of accounting, Y Corporation shall continue to use the accrual method of accounting with respect to the integrated manufacturing business and shall continue to use the cash receipts and disbursements method of accounting with respect to the personal service business.

(4) *Rules of application.* In any case where the method of accounting employed on the date of distribution or transfer is continued, it will be unnecessary for the acquiring corporation to renew any election previously made by

it or by any distributor or transferor corporation with respect to such method of accounting. Also, the acquiring corporation is bound by any election previously made by it or by any distributor or transferor corporation with respect to such method of accounting which is in effect on the date of distribution or transfer to the same extent as though the distribution or transfer had not occurred. If, on the date of distribution or transfer, any party to a section 381(a) transaction had no established method of accounting for any item, or came into existence as a result of the transaction, such party shall not be considered to be using a method of accounting for such item or having an overall method of accounting different from that used by the other parties to the transaction. Where under other sections of the Internal Revenue Code or regulations thereunder a taxpayer is permitted to elect a method of accounting on a project-by-project, job-by-job, or other similar basis (such as the election to charge taxes and carrying charges to capital account under § 1.266–1), that method elected with respect to each project or job shall be deemed to be an established method of accounting only for the project or job for which it is elected. Accordingly, unless two or more of the parties were working on the same project or job and were using different methods of accounting for such project or job before the date of distribution or transfer, the method of accounting previously elected for each project or job must be continued.

(c) *Change of method of accounting without consent of Commissioner*—(1) *General rule.* If the acquiring corporation may not continue to use, under the provisions of paragraph (b) of this section, the method of accounting used by it or the distributor or transferor corporation or corporations on the date of distribution or transfer, the acquiring corporation shall use the principal method of accounting of such corporation (as determined under subparagraph (2) of this paragraph), provided that (i) such method of accounting clearly reflects the income of the acquiring corporation, and (ii) the use of such method is not inconsistent with the provisions of any closing agreement entered into under section 7121 and the regulations thereunder. If the principal method of accounting does not meet these requirements, or if there is no principal method of accounting, see subdivision (i) of paragraph (d)(1) of this section. If the acquiring corporation wishes to use a method of accounting other than the principal method of accounting, see subdivision (ii) of paragraph (d)(1) of this section. Whenever this paragraph applies, the increase or decrease in tax resulting from the change from the method of accounting previously used by any of the corporations involved shall be taken into account by the acquiring corporation. The adjustments necessary to reflect such change and such increase or decrease in tax shall be determined and computed in the same manner as if on the date of distribution or transfer each of the several corporations whose method or methods of accounting are required to be changed in accordance with this section had initiated a change in accounting method. In addition, the acquiring corporation shall take into account the portion of such adjustments which is attributable to pre-1954 Code years to the extent not taken into account by any of the other corporations in accordance with the rules provided in section 481(b)(4) and this paragraph. If the principal method of accounting is adopted under this paragraph, it will be unnecessary for the acquiring corporation to renew any election previously made by it or by any distributor or transferor corporation with respect to such principal method of accounting. Also, in such event, the acquiring corporation is bound by any election previously made by it or by any distributor or transferor corporation with respect to such principal method of accounting which is in effect on the date of distribution or transfer to the same extent as though the distribution or transfer had not occurred.

(2) *Principal method of accounting.* (i) The determination of the principal method of accounting shall be made with respect to each integrated trade or business operated by the acquiring corporation immediately after the date of distribution or transfer, except with respect to items for which only a single

method of accounting may be used by any one taxpayer. See subdivision (iv) of this subparagraph. Such determination for an integrated trade or business shall be made by reference to the methods of accounting used immediately preceding the date of distribution or transfer by each of the component trades or businesses which now constitute the integrated trade or business of the acquiring corporation. The method of accounting for items other than those for which special methods of accounting are provided under chapter 1 of the Code and the regulations thereunder (see § 1.446–1(c)(1)(iii)) shall be governed by the principal overall method determined for such trade or business under subdivision (ii) of this subparagraph. The method of accounting for items for which special methods of accounting are provided under chapter 1 of the Code and the regulations thereunder shall be determined under subdivision (iii) of this subparagraph.

(ii) The principal overall method of accounting of an integrated trade or business is determined by making a comparison of—

(*a*) The total of the adjusted bases of the assets (determined under section 1011 and the regulations thereunder) immediately preceding the date of distribution or transfer, and

(*b*) The gross receipts for a representative period (ordinarily the most recent period of 12 consecutive calendar months ending on or prior to the date of distribution or transfer)

of the component trades or businesses which are integrated or are required to be integrated. If more than one component trade or business used the same overall method, then such total assets and gross receipts of each of the component trades or businesses shall be aggregated and compared with the aggregate of such total assets and gross receipts of other component trades or businesses which used a different overall method. If this comparison shows that the one or more component trades or businesses (using a common overall method of accounting) having the greatest total of the adjusted bases of assets also has the greatest amount of gross receipts, then the overall method of accounting of such one or more component trades or businesses shall be the principal overall method of accounting. If this comparison shows that the one or more component trades or businesses (using a common overall method of accounting) having the greatest total of the adjusted bases of assets does not also have the greatest amount of gross receipts, then there is no principal overall method of accounting, and the acquiring corporation shall request the Commissioner to determine the appropriate overall method of accounting for such integrated trade or business in accordance with paragraph (d) of this section.

(iii) The principal method of accounting for an item for which a special method or methods of accounting are provided under chapter 1 of the Code and the regulations thereunder is determined by comparing the amounts of such item and related accounts for the component trades or businesses in accordance with the principles of subdivision (ii) of this subparagraph. Thus, for example, in the case of bad debts, trades or businesses which are components of the integrated trade or business and which had been using the reserve method of accounting will be compared with the other component trades or businesses which had been using the specific charge-off method of accounting. In such a case, the following factors would ordinarily be used in determining the principal method of accounting for bad debts: (*a*) Sales on account for the most recent period of 12 consecutive calendar months ending on or prior to the date of distribution or transfer, (*b*) accounts receivable immediately before the date of distribution or transfer, and (*c*) the amount of debts which became worthless within the meaning of section 166(a) and the regulations thereunder during the most recent period of 12 consecutive calendar months ending on or prior to the date of distribution or transfer. If this comparison shows that the one or more component trades or businesses using the same method of accounting with respect to bad debts have the greater amounts of such sales, accounts receivable, and bad debts, then the method of accounting with respect to bad debts for such one or more component trades or businesses shall be the principal

method of accounting. If such comparison shows that the one or more component trades or businesses using the same method of accounting with respect to bad debts do not have the greater amounts of all of such items, then there is no principal method of accounting with respect to bad debts, and the acquiring corporation shall request the Commissioner to determine the appropriate method of accounting for bad debts for such integrated trade or business in accordance with paragraph (d) of this section.

(iv) If a single method of accounting must be employed by a taxpayer with respect to a particular item regardless of the number of separate and distinct trades or businesses operated by the taxpayer, the principal method of accounting for such item shall be determined by comparing the aggregate amount of the item and related accounts for all the parties to the transaction using a common method, with the aggregate amount of the item and related accounts for those parties to the transaction which use a different common method. The method of accounting of the party having the greatest aggregate amount of such item and related accounts shall be the principal method of accounting for such item.

(3) *Examples.* The provisions of this paragraph may be illustrated by the following examples:

Example (1). M Corporation, which commenced business in 1955, uses the cash receipts and disbursements method of accounting, while N Corporation uses the accrual method. On June 30, 1961, N Corporation acquires all of the assets of M Corporation in a transaction to which section 381(a) applies. N Corporation then integrates its own business with that of M Corporation. Immediately prior to the transfer the total of the adjusted bases of the assets of N Corporation was greater than that of M Corporation, and for the 12-month period ending on June 30, 1961, the gross receipts of N Corporation were greater than that of M Corporation. Under such circumstances, the accrual method of accounting is the principal overall method of accounting and N Corporation shall use such method for the integrated business, provided it clearly reflects income, unless consent of the Commissioner is obtained in accordance with paragraph (d) of this section to use a different method of accounting. Except as to items for which N Corporation had no established method of accounting and items for which a special method of accounting is provided under chapter 1 of the Code and the regulations thereunder, all adjustments necessary to place the accounts of M Corporation on the accrual method shall be made in accordance with section 481. Any increase or decrease in tax resulting from such adjustments shall be taken into account by N Corporation. Such adjustments and such increase or decrease in tax shall be determined and computed in the same manner as if M Corporation had initiated a change in method of accounting on June 30, 1961.

Example (2). Assume the same facts as in *Example (1)* except that the gross receipts of M Corporation were greater than those of N Corporation for the 12-month period ending on June 30, 1961. N Corporation must, under such circumstances, request the Commissioner to determine the appropriate overall method of accounting, in accordance with the provisions of paragraph (d) of this section. The necessary adjustments to be made by the corporation whose method of accounting is changed shall be made in accordance with section 481 to place the integrated business on the method so adopted. Any increase or decrease in tax resulting from such adjustments shall be taken into account by N Corporation. Such adjustments and such increase or decrease in tax shall be determined and computed in the same manner as if the corporation whose method is changed had initiated a change in method of accounting on June 30, 1961.

Example (3). Assume the same facts as in *Example (1).* Assume further that M Corporation's deduction for wages and salaries for the 12 calendar months ending on June 30, 1961, is larger than N Corporation's deduction for wages and salaries for such period. Since wages and salaries is not an item for which a special method of accounting is provided under chapter 1 of the Code or the regulations thereunder, the necessary adjustments shall be made in accordance with section 481 to place the wages and salary account of M Corporation on the accrual method of accounting, provided such accrual method clearly reflects income, unless consent of the Commissioner is obtained in accordance with paragraph (d) of this section to use a different method of accounting. Any increase or decrease in tax resulting from such adjustments shall be taken into account by N Corporation. Such adjustments and such increase or decrease in tax shall be determined and computed in the same manner as if M Corporation had initiated a change in method of accounting on June 30, 1961.

Example (4). Assume the same facts as in *Example (1).* Assume further that M Corporation used the specific charge-off method with respect to bad debts, and that N Corporation has established a reserve for bad debts. M Corporation's sales on account and bad debts for the 12 calendar months ending June 30,

1961, were larger than those of N Corporation. Also M Corporation's accounts receivable immediately prior to June 30, 1961, were larger than those of N Corporation. Since the method of accounting for bad debts is a special method of accounting under section 166, M Corporation's method of accounting for bad debts is the principal method of accounting for such item. Assuming such method clearly reflects income, appropriate adjustments shall be made in accordance with section 481 to the accounts of N Corporation to place N Corporation on the specific charge-off method with respect to all of its bad debts, as if N Corporation had initiated a change in method of accounting on June 30, 1961, and N Corporation shall include the amount of its reserve for bad debts in gross income, unless consent of the Commissioner is obtained in accordance with paragraph (d) of this section to use a different method of accounting.

Example (5). Assume the same facts as in *Example (1)* except that M Corporation commenced business in 1945. In addition assume that N Corporation is a calendar-year taxpayer and that of the total amount of the adjustments required by section 481 to place the accounts of M Corporation on the accrual method $40,000 is attributable to pre-1954 Code years as described in section 481(b)(4) and the regulations thereunder. Assume further that M Corporation does not elect, under section 481(b)(6), to take the $40,000 portion of the adjustments into account in the manner described in section 481(b)(1) or (2). In computing the increase in tax of M Corporation attributable to the $40,000 portion of the adjustment for the fiscal year ended June 30, 1961, only one-tenth, or $4,000, will be taken into account. The resulting increase in tax shall be taken into account by N Corporation. The remaining nine-tenths of the $40,000 portion of the adjustments, or $36,000, shall be taken into account by N Corporation in the amount of $4,000 in each of the calender years 1962 through 1970.

(d) *Change of method of accounting with consent of Commissioner*—(1) *General rule.* (i) If the acquiring corporation may not continue to use, under paragraph (b), the method of accounting used by it or the distributor or transferor corporation or corporations on the date of distribution or transfer, and may not under paragraph (c) use the principal method of accounting, or, if there is no principal method of accounting, then the Commissioner shall determine the appropriate method or combination of methods of accounting to be used.

(ii) If an acquiring corporation wishes to use a method or combination of methods of accounting other than the principal method of accounting which is required to be used by paragraph (c) of this section, it shall apply to the Commissioner for permission to use such other method or combination of methods of accounting. Permission to use such other method or combination of methods of accounting will not be granted unless the acquiring corporation and the Commissioner agree to the terms, conditions, and adjustments under which the change to such method or combination of methods will be effected.

(iii) The increase or decrease in tax resulting from the change from the method of accounting previously used by any of the corporations involved shall be taken into account by the acquiring corporation. The adjustments necessary to reflect such change and such increase or decrease in tax shall be determined and computed in the same manner as if, on the date of distribution or transfer, each of the several corporations that were not using the method or combination of methods of accounting adopted pursuant to subdivision (i) or (ii) of this subparagraph had initiated a change in accounting method.

(2) *Time and manner of making application.* Applications under subparagraph (1) of this paragraph for permission to use a method of accounting or requests for determination of the method of accounting to be used shall be filed with the Commissioner of Internal Revenue, Attention: T:R, Washington, DC, 20224, not later than 90 days after the date of distribution or transfer, except that in cases where the date of distribution or transfer occurs before August 5, 1964, such applications or requests shall be filed not later than November 3, 1964. The application shall be accompanied by a copy of the statement described in paragraph (b)(3) of § 1.381(b)–1, and by a statement specifying the nature of the transaction which causes section 381 to apply; the difference in accounting methods used by the corporations concerned; the method or methods of accounting proposed to be used by the acquiring corporation; and the various amounts, if any, of items of income or

deduction which will be duplicated or omitted in the computation of taxable income under such proposed method or methods. The Commissioner may also require such other information as may be necessary in order to determine the appropriate method or combination of methods of accounting to be used by the acquiring corporation.

(e) *Special rules applicable to distributions or transfers before August 5, 1964*—(1) *Statute of limitations bars assessment or refund.* If the date of distribution or transfer was before August 5, 1964, and if the assessment of any deficiency or the refund or credit of any overpayment for the taxable year of the acquiring corporation which includes the date of distribution or transfer or any subsequent taxable year is prevented by the operation of any law or rule of law, then this section does not authorize the Commissioner or the acquiring corporation to change any method or methods of accounting in any taxable year of the acquiring corporation. However, the Commissioner or the acquiring corporation may change such method or methods of accounting under the provisions of section 446 and the regulations thereunder or, where applicable, any section of the Internal Revenue Code (other than section 381(c)(4)), or the regulations thereunder, in accordance with which such changes may be made without the consent of the Commissioner.

(2) *Statute of limitations does not bar assessment and refund.* Except as provided in subparagraph (1) of this paragraph—

(i) If the date of distribution or transfer was before August 5, 1964, and the acquiring corporation has, for the taxable year which includes the date of distribution or transfer, (*a*) adopted or continued a method of accounting consistent with the rules of this section, (*b*) been granted permission by the Commissioner in accordance with paragraph (e) of § 1.446–1 to use a method or combination of methods of accounting, or (*c*) adopted a method of accounting that under other sections of the Internal Revenue Code, or regulations thereunder, may be adopted without the consent of the Commissioner, then the method or methods of accounting adopted or continued in the manner described in (*a*), (*b*), and (*c*) shall not be changed, by reason of the rules contained in this section, by the Commissioner or the acquiring corporation for any taxable year ending after the date of distribution or transfer. However, the Commissioner or the acquiring corporation may change such methods of accounting for any such taxable year under the provisions of, and to the extent permitted by, section 446 and the regulations thereunder or, where applicable, any section of the Internal Revenue Code (other than section 381(c)(4)), or regulations thereunder, in accordance with which such change may be made without the consent of the Commissioner.

(ii) If the date of distribution or transfer was before August 5, 1964, and the acquiring corporation has, for the taxable year which includes the date of distribution or transfer, adopted or continued a method or methods of accounting other than in the manner described in (*a*), (*b*), and (*c*) of subdivision (i) of this subparagraph, then the acquiring corporation may—

(*a*) Continue to use the method or methods of accounting so adopted or continued if such method or methods clearly reflect income and if proper adjustments were made to reflect the adoption of such method or methods, or

(*b*) Adopt the method or methods of accounting prescribed by this section. Such method or methods of accounting shall be adopted by filing an amended return (which includes the proper adjustments required by this section) for the taxable year of the acquiring corporation which includes the date of distribution or transfer, and by filing amended returns for all subsequent taxable years of the acquiring corporation for which returns have previously been filed. Such amended return or returns shall be accompanied by a copy of the statement described in paragraph (b)(3) of § 1.381(b)–1, and by a statement specifying the nature of the transaction which causes section 381 to apply; the difference in accounting methods used by the corporations concerned; the method or methods of accounting originally adopted by the acquiring corporation; the method or methods of accounting adopted on the

amended return or returns; and the computation of the amount of the adjustments and the resulting increase or decrease in tax.

[T.D. 6750, 29 FR 11263, Aug. 5, 1964, as amended by T.D. 8071, 51 FR 2481, Jan. 17, 1986]

§1.381(c)(5)–1 Inventories.

(a) *Carryover requirement*—(1) *General rule.* Section 381(c)(5) provides that in a transaction to which section 381(a) applies and in which inventories are received by the acquiring corporation (as defined in §1.381(a)–1(b)(2)) such inventories shall be taken by the acquiring corporation (in determining its income) on the same basis on which such inventories were taken by the distributor or transferor corporation on the date of distribution or transfer unless different inventory methods were used on that date by several distributor or transferor corporations or by a distributor or transferor corporation and the acquiring corporation. If different methods were used, the acquiring corporation shall use the method or combination of methods of taking inventories adopted pursuant to the provisions of this section.

(2) *Rules of application.* Reference in this section to a method or methods of taking inventories are to be construed as referring to both the method or methods of identifying the goods and the method or methods of valuing the goods. The method or methods of taking inventories shall be determined on the date of distribution or transfer, and any corporation, a party to a section 381(a) transaction whose taxable year does not end on such date shall be considered as using the method or methods of taking inventories that it would have employed had its taxable year ended on such date. The amount of the adjustments necessary to reflect the change in method of taking inventories pursuant to this section, the manner in which they are to be taken into account by the acquiring corporation, and the tax attributable thereto shall be determined and computed under section 481 and the regulations thereunder, subject to the rules provided in paragraphs (c) and (d) of this section. However, in the case of any party to a section 381(a) transaction which changes its method of taking inventories to the last-in, first-out method of identification, the adjustments required by section 472(d) shall be applicable. See paragraph (e) of this section. This section shall not be construed as preventing any party to a section 381(a) transaction from adopting an inventory method which, under the provisions of section 471 or 472, and the regulations thereunder, may be adopted without the consent of the Commissioner. For provisions defining the date of distribution or transfer, see paragraph (b) of §1.381(b)–1.

(b) *Conditions for continuation of methods of taking inventories*—(1) *No difference in method of taking inventories.* (i) If all the parties to a section 381(a) transaction used the same method of taking inventories on the date of distribution or transfer, the acquiring corporation, whether or not immediately after the date of distribution or transfer it operates separate or integrated trades or businesses, shall continue to use such method of taking inventories, unless the acquiring corporation has, in accordance with paragraph (e) of §1.446–1, obtained the consent of the Commissioner to use a different method of taking inventories. For purposes of this determination, a corporation shall be deemed to be using the last-in, first-out method of taking inventories with respect to a particular type of goods on the date of the distribution or transfer, if such corporation elects, under the provisions of section 472, to adopt the last-in, first-out method with respect to such goods for its taxable year within which or with which the date of distribution or transfer occurs.

(ii) The provisions of this subparagraph may be illustrated by the following example:

Example. O and P corporations are manufacturing companies which compute their entire inventories by the use of the last-in, first-out method of identification and the cost basis of valuation. In applying the last-in, first-out method both corporations use the dollar-value method, use the double-extension method, pool under the natural business unit method, and value annual inventory increases by reference to the actual cost of goods most recently purchased. P corporation acquires the assets of O corporation in a transaction to which section 381(a) applies. Under the provisions of this subparagraph,

on and after the date of distribution or transfer P corporation must continue to use the last-in, first-out method of identification, the cost basis of valuation, and, in applying the last-in, first-out method, must continue to use the dollar-value method, use the double-extension method, pool under the natural business unit method, and value annual inventory increases by reference to the actual cost of goods most recently purchased, unless, in accordance with paragraph (e) of § 1.446–1, consent of the Commissioner is obtained to change the method of taking inventories.

(2) *Separate businesses.* (i) If, immediately after the date of distribution or transfer, any of the trades or businesses of the parties to a section 381(a) transaction are operated as separate and distinct trades or businesses within the meaning of paragraph (d) of § 1.446–1, then the method or methods of taking inventories employed by such parties to the transaction on the date of distribution or transfer with respect to such trades or businesses shall be used by the acquiring corporation, unless the acquiring corporation has, in accordance with paragraph (e) of § 1.446–1, obtained the consent of the Commissioner to use a different method of taking inventories. This subparagraph shall not be construed as precluding the Commissioner under section 471 or 472, and the regulations thereunder, from requiring that the method of taking inventories used in a particular trade or business be used in another trade or business with respect to similar types of goods, if, in the opinion of the Commissioner, the use of such method of taking inventories is necessary for a clear reflection of income.

(ii) The provisions of this subparagraph may be illustrated by the following example:

Example. R Corporation is engaged in the production of radios and television sets and S Corporation is engaged in the production of washers and driers. In computing their inventories both corporations use the cost basis of valuation. R corporation uses the last-in, first-out method of identification, whereas S corporation uses the first-in, first-out method. T corporation acquires the assets of R corporation and S corporation in a transaction to which section 381(a) applies. T corporation operates as a separate and distinct trade or business, within the meaning of paragraph (d) of § 1.446–1, each of the businesses formerly operated by R corporation and S corporation. Under the provisions of this subparagraph, T corporation is required to continue to use the method of taking inventories previously used by R corporation and S corporation, respectively, with respect to each trade or business, unless, in accordance with paragraph (e) of § 1.446–1, consent of the Commissioner is obtained to change the methods of taking inventories, on and after the dates of transfer. However, the Commissioner may require T corporation, in accordance with § 1.472–2, to use the last-in, first-out method with respect to that portion of the goods in the trades or businesses formerly operated by S corporation and T corporation which are similar to goods in the trade or business formerly operated by R corporation, if, in his opinion, the use of the last-in, first-out method with respect to such similar goods is necessary for a clear reflection of income.

(3) *Integrated businesses*—(i) *Same inventory method.* If, immediately after the date of distribution or transfer, any of the trades or businesses of the parties to a section 381(a) transaction are not operated as separate and distinct trades or businesses within the meaning of paragraph (d) of § 1.446–1, then, to the extent that the same methods of taking inventories for particular types of goods were employed on the date of distribution or transfer by the parties to the transaction with respect to any trades or businesses which are integrated or are required to be integrated in accordance with paragraph (d) of § 1.446–1, the acquiring corporation shall continue to employ such methods of taking inventories for such types of goods, unless, in accordance with paragraph (e) of § 1.446–1, the acquiring corporation has obtained the consent of the Commissioner to use a different method of taking inventories. This subdivision shall not be construed as precluding the Commissioner under section 471 or 472, and the regulations thereunder, from requiring that the method of taking inventories used with respect to particular types of goods in a particular trade or business operated by the acquiring corporation after the date of distribution or transfer be used with respect to similar types of goods in another trade or business operated by it after such date if, in the opinion of the Commissioner, the use of such method of taking inventories is necessary for a clear reflection of income.

(ii) *Different inventory methods.* If, immediately after the date of distribution or transfer, any of the trades or businesses of the parties to a section 381(a) transaction are not operated as separate and distinct trades or businesses within the meaning of paragraph (d) of § 1.446–1, then, to the extent that different methods of taking inventories for particular types of goods were employed on the date of distribution or transfer by the parties to the transaction with respect to any trades or businesses which are integrated or required to be integrated in accordance with paragraph (d) of § 1.446–1, the acquiring corporation shall not be permitted to continue to use such different methods of taking inventories, and shall adopt the method of taking inventories described in paragraph (c) of this section for such types of goods unless, in accordance with paragraph (d) of this section, consent of the Commissioner is obtained to use a different method of taking inventories.

(iii) *Examples.* The provisions of this subparagraph may be illustrated by the following examples:

Example (1). O and P corporations are manufacturing companies which compute their entire inventories by the use of the last-in, first-out method of identification and the cost basis of valuation. In applying the last-in, first-out method both corporations use the dollar-value method and the double-extension method. However, O corporation pools under the natural business unit method while P corporation pools under the multiple pool method. In addition, O corporation determines the cost of its annual inventory increase by reference to the actual cost of goods most recently purchased, whereas P corporation determines the cost of such increase by reference to the actual cost of the goods purchased during the taxable year in the order of acquisition. P corporation acquires the assets of O corporation in a transaction to which section 381(a) applies and integrates the business formerly operated by O corporation into the business which was operated by P corporation before the date of distribution or transfer. Under the provisions of subdivision (i) of this subparagraph (relating to the same inventory methods in an integrated trade or business), P corporation shall continue to use the last-in, first-out method of identification, the cost basis of valuation, and in applying the last-in, first-out method, shall continue to use the dollar-value method and the double-extension method, unless, in accordance with paragraph (e) of § 1.446–1, consent of the Commissioner is obtained to change the method of taking inventories. However, under the provisions of subdivision (ii) of this subparagraph (relating to different inventory methods in an integrated trade or business), P corporation shall use the method of taking inventories described in paragraph (c) of this section with respect to the method of pooling and the method of determining the cost of annual inventory increases, unless, in accordance with paragraph (d) of this section, consent of the Commissioner is obtained to use a different method of taking inventories.

Example (2). Y and Z corporations are engaged in the manufacture of cereal products. Y corporation uses the first-in, first-out method of identification and the cost or market, whichever is lower, method of valuing its inventories, including oats. Z corporation uses the first-in, first-out method of identification and the cost or market, whichever is lower, method of valuing its inventories, except oats which are valued on the cost method. Y corporation acquires all of the assets of Z corporation in a transaction to which section 381(a) applies and integrates the business formerly operated by Z corporation into the business which was operated by Y corporation before the date of distribution or transfer. Under the provisions of subdivision (i) of this subparagraph (relating to the same inventory methods in an integrated trade or business), Y corporation must continue to use the first-in, first-out method with respect to all of its inventories and must continue to use the cost or market, whichever is lower, method of valuing all inventories except oats, unless, in accordance with paragraph (e) of § 1.446–1, consent of the Commissioner is obtained to change the method of taking inventories. In addition, under the provisions of subdivision (ii) of this subparagraph (relating to different inventory methods in an integrated trade or business), Y corporation shall use the method described in paragraph (c) of this section in valuing its inventory of oats, unless, in accordance with paragraph (d) of this section, consent of the Commissioner is obtained to use a different method of valuing its oats.

(4) *Rules of application.* (i) In any case where the method of taking inventories employed on the date of distribution or transfer is continued, it will be unnecessary for the acquiring corporation to renew any election previously made by it or by any distributor or transferor corporation with respect to such method of taking inventories, and the acquiring corporation is bound by any such elections. If, on the date of distribution or transfer, any party to a

section 381(a) transaction had no inventories of a particular type of goods, or such party came into existence as a result of the transaction, such party shall not be considered to be using a method of taking inventories for the particular type of goods different from that used by the other parties to the transaction. If, on the date of distribution or transfer, any one of the parties to the transaction is using the cash receipts and disbursements method of accounting and is not required to take inventories, the determination as to whether such method of accounting is to be continued by the acquiring corporation shall be made in accordance with section 381(c)(4) and the regulations thereunder.

(ii) The provisions of this subparagraph may be illustrated by the following examples:

Example (1). M corporation is engaged in manufacturing and computes its inventories under the first-in, first-out method of identification and the cost or market, whichever is lower, method of valuation. N corporation is also engaged in manufacturing and computes its inventories under the first-in, first-out method of identification and the cost method of valuation. M corporation acquires the assets of N corporation in a transaction to which section 381(a) applies and M corporation integrates the business formerly operated by N corporation into the business which was operated by M corporation before the date of distribution or transfer. On the date of distribution or transfer, N corporation has inventories of sheet steel while M corporation has no inventories of this particular type of goods. In all other respects the inventories of the two corporations consist of similar types of goods. Under the provisions of this subparagraph, M corporation must use the first-in, first-out method of identification and the cost method of valuation of inventories of sheet steel, unless, in accordance with paragraph (e) of § 1.446–1, consent of the Commissioner is obtained to change the method of taking such inventories. For other goods in its inventories M corporation must use the first-in, first-out method of identification (as required by subparagraph (3)(i) of this paragraph), and with respect to the method of valuation, must use the method of taking inventories described in paragraph (c) of this section, unless, in accordance with paragraph (d) of this section, consent of the Commissioner is obtained to use a different method of taking inventories.

Example (2). W corporation is engaged in the business of raising cattle and uses the cash receipts and disbursements method of computing taxable income. Inventories, therefore, are not required. X corporation is also engaged in the business of raising cattle and uses the accrual method of computing taxable income under which it has elected to use the ''farm-price method'' of valuing inventories. The assets of W corporation are acquired by X corporation in a transaction to which section 381(a) applies and X corporation integrates the business formerly operated by W corporation into the business which was operated by X corporation before the date of distribution or transfer. Under the provisions of this subparagraph, whether X corporation is required to take inventories will depend upon which method of accounting is used by X corporation after the date of distribution or transfer, in accordance with the provisions of section 381(c)(4) and the regulations thereunder. Therefore, if X corporation uses the cash receipts and disbursements method, it will not be required to take inventories into account in computing its taxable income. However, if X corporation uses the accrual method, it must use the ''farm-price method'' of taking inventories, unless, in accordance with paragraph (d) of this section, consent of the Commissioner is obtained to use a different method of taking inventories.

(c) *Change of method of taking inventories without consent of Commissioner*—(1) *General rule.* If, under the provisions of paragraph (b) of this section, the acquiring corporation is not permitted to continue to use the method of taking inventories used by it or by the distributor or transferor corporation or corporations on the date of distribution or transfer, the acquiring corporation shall use the principal method of taking inventories for each particular type of goods of such corporations, as determined under subparagraph (2) of this paragraph: *Provided,* That:

(i) Such method clearly reflects the income of the acquiring corporation after the distribution or transfer as provided by sections 446(a) and 471 and the regulations thereunder, and

(ii) The use of such method is not inconsistent with the provisions of any closing agreement entered into under section 7121 and the regulations thereunder.

If the principal method does not satisfy the requirements of subdivisions (i) and (ii) of this subparagraph, or if the acquiring corporation wishes to use a method other than the principal method, see paragraph (d)(1) of this section.

If the principal method of taking inventories is adopted under this paragraph, it will not be necessary for the acquiring corporation or corporations to renew any election previously made by it or by the distributor or transferor corporation with respect to such principal method of taking inventories, and the acquiring corporation is bound by any such election.

(2) *Principal method of taking inventories.* The determination of the principal method of taking inventories shall be made with respect to each particular type of goods of each integrated trade or business operated by the acquiring corporation immediately after the date of distribution or transfer. Such determination for each integrated trade or business shall be made by reference to the methods of taking inventories previously used in the component trades or businesses for such types of goods which constitute the subsequent integrated trade or business of the acquiring corporation. For purposes of this determination, a corporation shall be deemed to be using the last-in, first-out method of taking inventories with respect to a particular type of goods on the date of the distribution or transfer, if such corporation elects, under the provisions of section 472, to adopt the last-in, first-out method with respect to such goods for its taxable year within which or with which the date of distribution or transfer occurs. The fair market value of the particular types of goods of each group of component trades or businesses with respect to which one method of taking inventories common to all was employed shall be compared with the fair market value of comparable types of goods of other groups of component trades or businesses with respect to which another method of taking inventories common to all was employed. For purposes of the above comparison and to the extent that particular types of goods are included in inventory by grouping or pooling, then such group or pool shall be considered as a single unit. The total fair market value of such group or pool shall be the basis for comparison in determining the principal method of taking inventories. The method of taking inventories of the group of component trades or businesses having the largest fair market value of such inventories shall be the principal method of taking inventories. For purposes of this subparagraph, the fair market value of the inventories of a component trade or business shall be determined immediately after the date of distribution or transfer.

(3) *Examples.* The provisions of this paragraph may be illustrated by the following examples:

Example (1). (i) X, Y, and Z corporations are all engaged in the manufacture of sheet metal. In addition, Y and Z corporations are engaged in the manufacture of paper containers. X and Y corporations use the first-in, first-out method of identifying goods and the cost method of valuing all inventories, while Z corporation uses the first-in, first-out method of identifying goods and the cost or market, whichever is lower, method of valuing all inventories. X, Y, and Z corporations enter into a transaction to which section 381(a) applies, and the acquiring corporation integrates the sheet metal businesses formerly operated by X, Y, and Z corporations and also integrates the paper container businesses formerly operated by Y and Z corporations. Each corporation has the same types of goods in the inventories of its sheet metal business and Y and Z corporations have the same types of goods in the inventories of their paper container businesses. Immediately after the date of distribution or transfer the fair market values of the respective inventories are as follows:

	X	Y	Z
Sheet metal	$10,000	$7,000	$15,000
Paper container	.....	6,000	7,000

(ii) Since X, Y, and Z corporations all used the first-in, first-out method of identifying their inventories as of the date of distribution or transfer, then, under the provisions of paragraph (b)(3)(i) of this section, the acquiring corporation shall continue to use the first-in, first-out method of identifying all goods unless, in accordance with paragraph (e) of § 1.446–1, consent of the Commissioner is obtained to change the method of accounting.

(iii) Since the acquired corporations used different methods of valuing inventories in their sheet metal business and their paper container business, when the businesses were integrated the acquiring corporation must, under the provisions of this paragraph, determine which method of inventory valuation used by the acquired corporations on the date of distribution or transfer is the principal method of inventory valuation for each of such businesses.

(*a*) In determining which is the principal method of valuing inventories for the sheet metal business pursuant to subparagraph (2) of this paragraph, the total fair market value of the sheet metal inventories of X and Y corporations, $17,000 (i.e., $10,000 +$7,000=$17,000), is compared with the fair market value of the sheet metal inventory of Z corporation, $15,000. Since the total fair market value of the sheet metal inventories of X and Y corporations ($17,000) exceeds the fair market value of the sheet metal inventory of Z corporation ($15,000), the cost method of valuation used by X and Y corporations is the principal method of taking such inventories, and must be used by the acquiring corporation in valuing such inventories, if the conditions set forth in subparagraph (1) of this paragraph are satisfied.

(*b*) In determining which is the principal method of valuing inventories for the paper container business pursuant to subparagraph (2) of this paragraph, the fair market value of the paper container inventory of Y corporation ($6,000) is compared with the fair market value of the paper container inventory of Z corporation ($7,000). Since the fair market value of the paper container inventory of Z corporation ($7,000) exceeds the fair market value of the paper container inventory of Y corporation ($6,000), the cost or market, whichever is lower, method of valuation used by Z corporation is the principal method of taking such inventories, and must be used by the acquiring corporation in valuing such inventories, if the conditions set forth in subparagraph (1) of this paragraph are satisfied.

Example (2). (i) X, Y, and Z corporations are all engaged in the manufacture of electrical appliances. In addition, X and Z corporations are engaged in the manufacture of plastic containers. X corporation uses the first-in, first-out method of identifying goods and the cost method of valuing all inventories. Y and Z corporations use the last-in, first-out method of identifying goods and the cost method of valuing all inventories. In applying the last-in, first-out method, Y corporation uses the dollar value method, the double-extension method, and pools under the natural business unit method, while Z corporation uses the dollar value method, the double-extension method, and pools under the multiple pooling method for all inventories. X, Y, and Z corporations enter into a transaction to which section 381(a) applies, and the acquiring corporation integrates the electric appliance businesses formerly operated by X, Y, and Z corporations and also integrates the plastic container businesses formerly operated by X and Z corporations. Each corporation has the same types of goods in the inventories of its electric appliance business and X and Z corporations have the same types of goods in the inventories of their plastic container businesses. Immediately after the date of distribution or transfer, the fair market values of the respective inventories are as follows:

	X	Y	Z
Electric appliance	$13,000	$10,000	$5,000
Plastic container	7,000	.....	6,000

(ii) Since X, Y, and Z corporations all used the cost method of valuing their inventories as of the date of distribution or transfer, then, under the provisions of paragraph (b)(3)(i) of this section, the acquiring corporation shall continue to use the cost method of valuing all goods unless, in accordance with paragraph (e) of § 1.446–1, consent of the Commissioner is obtained to change the method of accounting.

(iii) Since the acquired corporations used different methods of identifying inventories in their electric appliance business and their plastic container business, when the businesses were integrated the acquiring corporation must, under the provisions of this paragraph, determine which method of inventory identification used by the acquired corporations on the date of distribution or transfer is the principal method of inventory identification for each of such businesses.

(*a*)(*1*) In determining which is the principal method of identifying inventories for the electric appliance business pursuant to subparagraph (2) of this paragraph, the fair market value of the electric appliance inventory of X corporation, $13,000, is compared with the total fair market value of the electric appliance inventories of Y and Z corporations, $15,000 (i.e., $10,000+$5,000 =$15,000). Since the total fair market value of the electric appliance inventories of Y and Z corporations ($15,000) exceeds the fair market value of the electric appliance inventory of X corporation ($13,000), the last-in, first-out method of identification is the principal method of taking the electric appliance inventories and must be used by the acquiring corporation, if the conditions set forth in subparagraph (1) of this paragraph are satisfied.

(*2*) Since Y and Z corporations used different pooling methods, in applying the last-in, first-out method, the acquiring corporation must, under the provisions of this paragraph, determine which pooling method as used by Y and Z corporations on the date of distribution or transfer is the principal method. In making such determination pursuant to subparagraph (2) of this paragraph, the fair market value of the electric appliance inventory of Y corporation ($10,000) is compared with the fair market value of the electric appliance inventory of Z corporation ($5,000). Since the fair market value of the electric appliance inventory of Y corporation ($10,000) exceeds the fair market value of the electric appliance inventory of Z corporation

($5,000), the natural business unit method is the principal method of pooling and must be used by the acquiring corporation in applying the last-in, first-out method with respect to the electric appliance business, if the conditions set forth in subparagraph (1) of this paragraph are satisfied.

In addition, under the provisions of paragraph (b)(3)(i) of this section, the acquiring corporation must use the dollar value method and the double-extension method for valuing goods in its electric appliance inventory since Y and Z corporations both used such methods in valuing their electric appliance inventories as of the date of distribution or transfer, unless, in accordance with paragraph (e) of § 1.446–1, consent of the Commissioner is obtained to change the method of accounting.

(*b*) In determining which is the principal method of identifying inventories for the plastic container business pursuant to subparagraph (2) of this paragraph, the fair market value of the plastic container inventory of X corporation ($7,000) is compared with the fair market value of the plastic container inventory of Z corporation ($6,000). Since the fair market value of the plastic container inventory of X corporation. ($7,000) exceeds the fair market value of the plastic container inventory of Z corporation ($6,000) the first-in, first-out method of identification, as used by X corporation, is the principal method of taking the plastic container inventories and must be used by the acquiring corporation, if the conditions set forth in subparagraph (1) of this paragraph are satisfied.

(d) *Change of method of taking inventories with consent of the Commissioner*—(1) *General rule*—(i) *Carryover and principal method not permitted.* If the acquiring corporation is not permitted, under paragraph (b) of this section, to continue to use the method of taking inventories used by it or the distributor or transferor corporation or corporations on the date of distribution or transfer, and is not permitted, under paragraph (c) of this section, to use the principal method of taking inventories, then such acquiring corporation must request the Commissioner to determine the appropriate method of taking inventories.

(ii) *Principal method required.* If the acquiring corporation wishes to use a method of taking inventories other than the principal method of taking inventories which is required to be used under paragraph (c) of this section, it shall apply to the Commissioner for permission to use such other method of taking inventories. Permission to use such other method of taking inventories will not be granted unless the acquiring corporation and the Commissioner agree to the terms, conditions, and adjustments under which the change to such method will be effected.

(2) *Time and manner of making application.* Request for a determination of the method of taking inventories to be used under subparagraph (1)(i) of this paragraph or applications for permission to use a method of taking inventories under subparagraph (1)(ii) of this paragraph shall be filed with the Commissioner of Internal Revenue, Attention: T:I:C, Washington, DC 20224, not later than 90 days after the date of distribution or transfer, except that in cases where the date of distribution or transfer occurs before January 15, 1975, such applications or requests shall be filed not later than 90 days after such date. The application shall be accompanied by a copy of the statement described in paragraph (b)(3) of § 1.381(b)–1, and by a statement specifying the nature of the transaction which causes section 381 to apply; the differences in methods of taking inventories used by the corporations concerned; the method of taking inventories proposed to be used by the acquiring corporations; and the amount of adjustments necessary to prevent duplication or omission of items in the computation of taxable income under such proposed method. The Commissioner may also require such other information as may be necessary in order to determine the proper method of taking inventories to be used by the acquiring corporation.

(e) *Treatment of layers of inventories by the acquiring corporation and rules for making adjustments*—(1) *In general.* This paragraph provides rules for treating layers of inventories by the acquiring corporation and rules for making adjustments, once the acquiring corporation's method of taking inventories for its taxable year including the date of distribution or transfer has been determined in accordance with the rules set forth in paragraphs (a) through (d) of this section. Thus, for example, if the acquiring corporation uses the last-in, first-out method of taking inventories for its taxable year including the date

of distribution or transfer, either because such corporation elects the last-in, first-out method of taking inventories under the provisions of section 472 for such year or because such method is otherwise determined to be the principal method of taking inventories under paragraph (c)(2) of this section, then such corporation shall integrate its layers of inventories and make the necessary adjustments in accordance with the rules under paragraph (e)(2) of this section.

(2) *Acquiring corporation uses last-in, first-out method*—(i) *Dollar-value method—(a) Distributor or transferor corporation using last-in, first-out method.* In any case where the acquiring corporation is required or permitted to use the dollar value method of pricing inventories on the last-in, first-out method for its taxable year including the date of distribution or transfer, the inventories of each distributor or transferor corporation which used the last-in, first-out method for its taxable year in which the distribution or transfer occurred shall be placed on the dollar value method pursuant to the rules contained in paragraph (f) of § 1.472–8, and then such inventories shall be integrated with the inventories of the acquiring corporation. If pools of each corporation are permitted or required to be combined, they shall be combined in accordance with the principles set forth in paragraph (g)(2) of § 1.472–8. For purposes of combining pools, all base-year inventories or layers of increment which occur in taxable years including the same December 31 shall be combined. A base-year inventory or layer of increment occurring in any short taxable year not including a December 31 or in the final taxable year of a distributor or transferor corporation shall be merged with and considered a layer of increment of its immediately preceding taxable year.

(*b*) *Distributor or transferor corporation not using last-in, first-out method.* In any case where the acquiring corporation is required or permitted to use the last-in, first-out method of taking inventories for its taxable year including the date of distribution or transfer, the inventories of each distributor or transferor corporation which did not use the last-in, first-out method for its taxable year in which the distribution or transfer occurred shall be treated by the acquiring corporation as having been acquired at their average unit cost in a single transaction on the date of distribution or transfer. Thus, where the acquiring corporation is required or permitted to use the dollar value method of pricing inventories, if an item of inventory is to be combined in an existing dollar value pool, such item shall be treated as if it were purchased at its average unit cost on the date of distribution or transfer with respect to such pool. On the other hand, if such item is not to be combined in an existing pool and the taxpayer otherwise uses LIFO with respect to such item, such item will be treated as if it were purchased at its average unit cost on the date of distribution or transfer with respect to a new pool (if any), with the base-year being the year of distribution or transfer. Adjustments resulting from a restoration to cost of any write-down to market value of such inventories of a distributor or transferor corporation shall be taken into account by such corporation in its final taxable year (where such year is closed by reason of section 381(b)). See section 472(d).

(ii) *Specific goods method—(a) Distributor or transferor corporation using last-in, first-out method.* In any case where the acquiring corporation is required or permitted to use the specific goods method of pricing inventories on the last-in, first-out method for its taxable year including the date of distribution or transfer, the inventories of each distributor or transferor corporation which used the last-in, first-out method for its taxable year in which the distribution or transfer occurred shall be treated by the acquiring corporation as having the acquisition dates and costs of the distributor or transferor corporation.

(*b*) *Distributor or transferor not using last-in, first-out method.* See paragraph (e)(1)(i)(*b*) of this section.

(3) *Acquiring corporation uses first-in, first-out method*—(i) *Distributor or transferor corporations not using first-in, first-out method.* In any case where the acquiring corporation is permitted or required to use the first-in, first-out method of taking inventories for its

taxable year including the date of distribution or transfer, the inventories of each distributor or transferor corporation which did not use the first-in, first-out method shall be treated by the acquiring corporation as having the same acquisition dates and costs which such inventory would have had if the distributor or transferor corporation had been using the first-in, first-out method for its taxable year in which the distribution or transfer occurred. However, if the acquiring corporation values its inventories at cost or market, whichever is lower, then the acquired inventories shall be treated as having been acquired at cost or market, whichever is lower.

(ii) *Distributor or transferor corporation using first-in, first-out method.* In any case where the acquiring corporation is required or permitted to use the first-in, first-out method of taking inventories for its taxable year including the date of distribution or transfer, the inventories of each distributor or transferor corporation which used such method for its taxable year in which the distribution or transfer occurred shall be treated by the acquiring corporation as having the same acquisition dates and costs as the distributor or transferor corporations. However, where the acquiring corporation values its inventories at cost or market, whichever is lower, then the acquiring corporation shall treat the acquired inventories as having been acquired at cost or market, whichever is lower.

(4) *Adjustments.* Except as provided in paragraph (e)(1) of this section with respect to any adjustments under section 472(d), the adjustments necessary to reflect the change from the method of taking inventories previously used by any of the corporations involved (including any adjustments required by section 481), shall be determined and computed in the same manner as if on the date of distribution or transfer, each of the several corporations that were not using the method of taking inventories used by the acquiring corporation for its taxable year including the date of distribution or transfer had initiated a change in the method of taking inventories. However, such adjustments (as an item of income or deduction, as the case may be) shall be taken into account solely by the acquiring corporation in computing its taxable income.

(f) *Basis of inventories received.* The basis of inventories received by the acquiring corporation from a distributor or transferor corporation shall be determined in accordance with section 334(b)(1) or 362(b), and the regulations thereunder. See also section 1013, and the regulations thereunder.

(g) *Additional rules applicable to distributions or transfers before January 15, 1975*—(1) *Statute of limitations bars assessment or refund.* If the date of distribution or transfer was before January 15, 1975, and if the assessment of any deficiency or the refund or credit of any overpayment for the taxable year of the acquiring corporation which includes the date of distribution or transfer or any subsequent taxable year is prevented by the operation of any law or rule of law, then this section does not authorize the Commissioner or the acquiring corporation to change any method or methods of computing inventories in any taxable year of the acquiring corporation. However, the Commissioner or the acquiring corporation may change such method or methods of computing inventories under the provisions of section 446, 471, or 472 and the regulations thereunder.

(2) *Statute of limitations does not bar assessment and refund.* Except as provided in subparagraph (1) of this paragraph—

(i) If the date of distribution or transfer was before January 15, 1975, and the acquiring corporation has, for the taxable year which includes the date of distribution or transfer:

(*a*) Adopted or continued a method or methods of taking inventories consistent with the rules of this section,

(*b*) Been granted permission by the Commissioner, in accordance with section 446, 471, or 472 and the regulations thereunder, to use a method or methods of taking inventories, or

(*c*) Adopted a method or methods of taking inventories that, under section 446, 471, or 472 and the regulations thereunder may be adopted without the consent of the Commissioner,

then the method or methods of taking inventories adopted or continued in the manner described in (*a*), (*b*), or (*c*) of

this subdivision, shall not be changed, by reason of the rules contained in this section, by the Commissioner or by the acquiring corporation for any taxable year ending after the date of distribution or transfer. However, the Commissioner or the acquiring corporation may change such method or methods of taking inventories for any such taxable year under the provisions of, and to the extent permitted by, section 446, 471, or 472 and the regulations thereunder.

(ii) If the date of distribution or transfer was before January 15, 1975, and the acquiring corporation has, for the taxable year which includes the date of distribution or transfer, adopted or continued a method or methods of taking inventories other than in the manner described in (*a*), (*b*), or (*c*) of subdivision (i) of this subparagraph, then the acquiring corporation may—

(*a*) Continue to use the method or methods of taking inventories so adopted or continued if such method or methods clearly reflect income and if proper adjustments were made to reflect the adoption of such method or methods, or

(*b*) Adopt the method or methods of taking inventories prescribed by this section.

Such method or methods of taking inventories shall be adopted by filing an amended return (which includes the proper adjustments required by this section) for the taxable year of the acquiring corporation which includes the date of distribution or transfer, and by filing amended returns for all subsequent taxable years of the acquiring corporation for which returns have previously been filed. Such amended return or returns shall be accompanied by a copy of the statement described in paragraph (b)(3) of § 1.381(b)–1, and by a statement specifying the nature of the transaction which causes section 381 to apply; the difference in methods of taking inventories used by the corporation concerned; the method or methods of taking inventories originally adopted by the acquiring corporation; the method or methods of taking inventories adopted on the amended return or returns; and the computation of the amount of the adjustments and the resulting increase or decrease in tax.

(h) *Effective date.* This section is applicable with respect to taxable years beginning after January 15, 1975. However, if a taxpayer wishes to rely on the rules stated in this section for taxable years beginning before January 15, 1975 it may do so, subject to the provisions of paragraph (g) of this section.

(Sec. 381(c)(5) and 7805 of the Internal Revenue Code of 1954 (68A Stat. 917; 26 U.S.C. 381(c)(5) and 7805))

[T.D. 7344, 40 FR 2684, Jan. 15, 1975]

§ 1.381(c)(6)–1 Depreciation method.

(a) *Carryover requirement*—(1) *Distributions in taxable years ending before July 25, 1969.* (i) Section 381(c)(6) provides that if, in a transaction in a taxable year which ends before July 25, 1969, to which section 381(a) applies, an acquiring corporation acquires depreciable property from a distributor or transferor corporation which computes its allowance for the depreciation of the property under section 167(b)(2), (3), or (4), the acquiring corporation shall compute its depreciation allowance by the same method used by the distributor or transferor corporation with respect to such property. Thus, if the distributor or transferor corporation used the sum of the years-digits method under section 167(b)(3) with respect to an asset distributed or transferred to an acquiring corporation, the acquiring corporation will be required to use the sum of the years-digits method with respect to such asset acquired. The computation of the depreciation allowance with respect to the property acquired shall be made under the provisions of section 167 and the regulations thereunder.

(ii) The rules provided in section 381(c)(6) and subdivision (i) of this subparagraph will apply only with respect to that part or all of the basis of the property in the hands of the acquiring corporation immediately after the date of distribution or transfer as does not exceed the basis of the property in the hands of the distributor or transferor corporation on the date of the distribution or transfer. For this purpose, the basis of the property in the hands of the distributor or transferor corporation shall be the adjusted basis provided in section 1011 for the purpose of

determining gain on the sale or other disposition of such property. For provisions defining the date of distribution or transfer see § 1.381(b)–1(b).

(2) *Distributions in taxable years ending after July 24, 1969.* (i) Section 381(c)(6) provides that if, in a transaction in a taxable year ending after July 24, 1969, to which section 381(a) applies, an acquiring corporation acquires depreciable property from a distributor or transferor corporation which computes its allowances for the depreciation of the property under subsection (b), (j), or (k) of section 167, the acquiring corporation shall compute its depreciation allowance by the same method used by the distributor or transferor corporation with respect to such property. Thus, if the distributor or transferor corporation used the straight line method under section 167(b)(1) with respect to an asset distributed or transferred to an acquiring corporation, the acquiring corporation will be required to use the straight line method with respect to such asset. Similarly, if the distributor or transferor corporation elected to compute depreciation under section 167(k) with respect to property attributable to rehabilitation expenditures, and such property is transferred to an acquiring corporation, the acquiring corporation will be required to compute depreciation under section 167(k) with respect to the property acquired. The computation of the depreciation allowance with respect to the property acquired shall be made under the provisions of section 167 and the regulations thereunder.

(ii) The rules provided in section 381(c)(6) and subdivision (i) of this subparagraph shall apply only with respect to that part or all of the basis of the property in the hands of the acquiring corporation immediately after the date of distribution or transfer as does not exceed the basis of the property in the hands of the distributor or transferor corporation on the date of the distribution or transfer. For this purpose, the basis of the property in the hands of the distributor or transferor corporation shall be the adjusted basis provided in section 1011 for the purpose of determining gain on the sale or other disposition of such property. For provisions defining the date of distribution or transfer see § 1.38(b)–1(b).

(b) *Portion in excess of distributor or transferor corporation's basis*—(1) *General rule.* With respect to that part of the basis of the depreciable property (other than certain section 1250 property described in subparagraph (2) of this paragraph) which in the hands of the acquiring corporation exceeds the adjusted basis to the distributor or transferor corporation, the acquiring corporation may use any reasonable method of computing depreciation, other than the methods provided in section 167(b)(2), (3), or (4). See paragraph (b) of § 1.167(b)–0 for methods which are acceptable under section 167(a) with respect to such property. See also sections 334(b)(1) and 362(b) for the determination of basis of property in the hands of the acquiring corporation in connection with a transaction to which section 381(a) applies.

(2) *Section 1250 property.* With respect to that part of the basis of section 1250 property acquired after July 24, 1969, which in the hands of the acquiring corporation exceeds the adjusted basis to the distributor or transferor corporation, the acquiring corporation shall be subject to the limitations contained in section 167(j)(4) (relating to used section 1250 property) or 167(j)(5) (relating to used residential rental property). Thus, for example, if section 1250 property which is not residential rental property is acquired in a section 381(a) transaction after July 24, 1969, the straight line method of depreciation (or other method allowable under section 167(j)(4)(B)) is the only acceptable method with respect to that portion of the basis of the property which, in the hands of the acquiring corporation, exceeds the adjusted basis to the transferor or distributor corporation.

(c) *Records required.* Records shall be maintained in sufficient detail to identify any depreciable property to which this section applies, and to establish the basis thereof.

(d) *Agreement under section 167(d).* To the extent not inconsistent with paragraph (b) of this section, an acquiring corporation shall be treated as the distributor or transferor corporation in the case of an agreement between the distributor or transferor corporation

and the district director under section 167(d) and § 1.167(d)–1 with respect to property to which section 381(c)(6) and this section apply. Thus, in the case where the basis of an asset in the hands of an acquiring corporation exceeds the basis of such asset in the hands of the distributor or the transferor corporation, such an agreement will not have the effect of permitting the acquiring corporation to compute its depreciation allowance with respect to such excess basis under the methods provided in section 167(b)(2), (3), or (4). However, the provisions of the agreement will continue to apply with respect to the useful life of the asset.

(e) *Change of method of depreciation.* Although the acquiring corporation is required to use the method of computing depreciation used by the distributor or transferor with respect to depreciable property to which this section applies, such acquiring corporation may use another method with respect to such property if consent of the Commissioner is obtained in accordance with paragraph (e) of § 1.446–1. Further, subject to the provisions of paragraph (b) of § 1.167(e)–1 the acquiring corporation may change from the declining balance method described in section 167(b)(2) to the straight line method without consent of the Commissioner.

(f) *Successive transactions to which* section 381(a) applies. The provisions of this section shall apply in the case of successive transactions to which section 381(a) applies. Thus, for example, if X Corporation, a transferor corporation, used the sum of the years-digits method under section 167(b)(3) with respect to an asset transferred to Y Corporation, an acquiring corporation, in a transaction to which section 381(a) applies, and subsequently Y Corporation, using the same method, transfers such asset to Z Corporation in a transaction to which section 381(a) also applies, then Z Corporation shall be required to use the sum of the years-digits method with respect to such asset.

(g) *Illustration.* The application of this section may be illustrated by the following example:

Example. M and N Corporations compute their taxable incomes on the basis of the calendar year. On December 31, 1959, M Corporation transfers all of its assets to N Corporation in a transaction to which section 381(a) applies. Included among these assets is an item of depreciable property which on that date has an adjusted basis (for determining gain) of $800,000 after M Corporation takes into account for 1959 its allowance for depreciation under section 167(b)(2). The basis attributable to the asset under section 362(b) is determined to be $900,000 in the hands of N Corporation. Under the provisions of section 381(c)(6) and paragraph (a) of this section, N Corporation is required to compute its allowance for the depreciation of the asset under section 167(b)(2) for 1960 and subsequent years but only in respect of $800,000 of its basis. N Corporation may use any reasonable method other than the methods provided in section 167(b)(2), (3), or (4) in computing its depreciation allowance of the remaining $100,000.

[T.D. 6559, 26 FR 2983, Apr. 7, 1961, as amended by T.D. 7166, 37 FR 5246, Mar. 11, 1972; 37 FR 6400, Mar. 29, 1972]

§ 1.381(c)(8)–1 Installment method.

(a) *Carryover requirement.* (1) Section 381(c)(8) provides that if, in a transaction to which section 381(a) applies, an acquiring corporation acquires installment obligations, the income from which the distributor or transferor corporation has elected under section 453 and the regulations thereunder to report on the installment method, then the acquiring corporation shall be treated as the distributor or transferor corporation would have been treated under section 453 had it not transferred the installment obligations. Thus, if the distributor or transferor corporation had properly elected to return income from the sale or other disposition of property giving rise to the obligations on the installment method, then the acquiring corporation shall be required to return the income from all such installment obligations in the same manner and to the same extent as the distributor or transferor corporation, unless consent of the Commissioner to use another method is obtained in accordance with paragraph (e) of § 1.446–1. Amounts received by the acquiring corporation on or after the date of distribution or transfer with respect to an installment sale made by the distributor or transferor corporation will not be taken into account in applying the limitation under section 453(b)(2) with respect to the amount of

payments received in the year of sale or other disposition.

(2) Section 381(c)(8) and this section have no application to sales or other dispositions of property made by the acquiring corporation on or after the date of distribution or transfer. For provisions defining the date of distribution or transfer, see § 1.381(b)–1(b). See section 381(c)(4) and the regulations thereunder for rules relating to the proper method or combination of methods of accounting to be used by the acquiring corporation.

(b) *Basis of obligations.* The basis in the hands of an acquiring corporation of installment obligations described in section 381(c)(8) and paragraph (a) of this section shall be the same as in the hands of the distributor or transferor corporation.

(c) *Repossession of property sold in prior years.* If the acquiring corporation repossesses property, previously sold by the distributor or transferor corporation, by reason of default by the purchaser in payment of the acquired installment obligations, then the acquiring corporation shall be treated as though it were the vendor corporation for purposes of determining, under section 453 and the regulations thereunder, the gain, loss, income, or deduction with respect to the property repossessed.

[T.D. 6559, 26 FR 2983, Apr. 7, 1961]

§ 1.381(c)(9)–1 Amortization of bond discount or premium.

(a) *Carryover requirement.* If, in a transaction to which section 381(a) applies, the acquiring corporation assumes liability for the payment of bonds of a distributor or transferor corporation which were issued at a discount or premium, then under the provisions of section 381(c)(9) the acquiring corporation is to be treated as the distributor or transferor corporation after the date of distribution or transfer for purposes of determining the amount of amortization allowable, or includible, with respect to such discount or premium in computing taxable income. Thus, if subsequent to February 28, 1913, a distributor or transferor corporation issues bonds at a premium and the liability for them is assumed by the acquiring corporation in a transaction to which section 381(a) applies, then the net amount of the premium is income which should be prorated or amortized over the life of the bonds, including the period during which the acquiring corporation is liable upon the obligations assumed. On the other hand, if a distributor or transferor corporation issues bonds at a discount and the liability for them is assumed by the acquiring corporation in a transaction to which section 381(a) applies, then the net amount of the discount is deductible in computing taxable income but should be prorated or amortized over the life of the bonds, including the period during which the acquiring corporation is liable upon the obligations assumed.

(b) *Expense incurred upon issuance of bonds.* If, in a transaction to which section 381(a) applies, the acquiring corporation assumes liability for bonds of a distributor or transferor corporation which were issued at a discount or premium, the acquiring corporation shall be treated as the distributor or transferor corporation after the date of distribution or transfer with respect to the expense incurred upon the issuance of such bonds.

(c) *Purchase of bonds.* If, in a transaction to which section 381(a) applies, the acquiring corporation assumes liability for bonds of a distributor or transferor corporation which were issued at a discount or premium and if the acquiring corporation subsequently purchases such bonds, then the acquiring corporation shall be treated as the distributor or transferor corporation for the purpose of determining the amount of any income or deduction resulting from the purchase. See paragraph (c) of § 1.61–12. For rules relating to the exchange or substitution of bonds issued by the acquiring corporation for bonds of a distributor or transferor corporation, see paragraph (d) of this section.

(d) *Exchange of new for old bonds.* Notwithstanding any other provision of this section, if—

(1) In a transaction to which section 381(a) applies, bonds of the acquiring corporation are exchanged or substituted for bonds of a distributor or transferor corporation which were issued at a discount or premium, or

(2) Bonds of the acquiring corporation are exchanged or substituted for bonds of a distributor or transferor corporation which were issued at a discount or premium and in respect of which the acquiring corporation has assumed the liability in a transaction to which section 381(a) applies,

then, with respect to any unamortized discount, premium, or expense of issuance attributable to such bonds of the distributor or transferor corporation, the acquiring corporation shall be treated as the distributor or transferor corporation.

(e) *Bonds of a distributor or transferor corporation.* For purposes of applying section 381(c)(9), the term *bonds of a distributor or transferor corporation* includes not only bonds issued by the distributor or transferor corporation but also bonds for which the distributor or transferor corporation has assumed liability. Thus, if the distributor or transferor corporation has assumed liability for bonds in a transaction in which any unamortized discount or premium attributable to such bonds carried over to such corporation, then the acquiring corporation assuming liability for the bonds shall be treated as the distributor or transferor corporation after the date of distribution or transfer for purposes of determining the amount of amortization allowable, or includible, with respect to such discount or premium. On the other hand, if the distributor or transferor corporation has assumed liability for bonds in a transaction in which any unamortized discount or premium attributable to such bonds did not carry over to such corporation, then there can be no carryover to the acquiring corporation under this section.

[T.D. 6532, 26 FR 405, Jan. 19, 1961]

§ 1.381(c)(10)–1 Deferred exploration and development expenditures.

(a) *Carryover requirement.* (1) If for any taxable year a distributor or transferor corporation has elected under section 615 or section 616 (or corresponding provisions of prior law) to defer and deduct on a ratable basis any exploration or development expenditures made in connection with any ore, mineral, mine, or other natural deposit transferred to the acquiring corporation in a transaction described in section 381(a), then under the provisions of section 381(c)(10) the acquiring corporation shall be entitled to deduct such expenditures on a ratable basis in the same manner, and to the same extent, as they would have been deductible by the distributor or transferor corporation in the absence of the distribution or transfer. For this purpose, the acquiring corporation shall be treated as though it were the distributor or transferor corporation. The principles set forth in paragraph (e) of § 1.615–3 and paragraph (f) of § 1.616–2 are applicable in computing the amount of the deduction allowable to the acquiring corporation in respect of expenditures deferred by a distributor or transferor corporation.

Example. X and Y Corporations are both organized on January 1, 1955, and both corporations compute their taxable income on the basis of the calendar year. During 1955, X Corporation purchases a mineral property which it begins to develop in 1956. During 1956, X Corporation incurs development expenditures of $500,000 in respect of such property which it elects to defer under section 616(b). On December 31, 1956, Y Corporation acquires all of the assets of X Corporation in a reorganization to which section 381(a) applies, no gain being recognized to X Corporation on the transfer. In 1957, Y Corporation sells 150,000 units of produced ore benefited by the development expenditures incurred and deferred by X Corporation, and the number of units remaining as of the end of 1957, plus the number of units sold during that year, is estimated to be 1,000,000. In addition to its deduction for depletion, Y Corporation is, in 1957, entitled to a deduction under sections 616(b) and 381(c)(10) of $75,000 of the development expenditures previously deferred by X Corporation, that is, $500,000 × 150,000/1,000,000.

(2) If a distributor or transferor corporation has elected under section 615 or section 616 (or corresponding provisions of prior law) to defer exploration or development expenditures in respect of a mine or other natural deposit which it subsequently disposes of except for a retained economic interest therein, such as the right to royalty income or in-ore payments, and such retained economic interest is transferred to the acquiring corporation in a transaction to which section 381(a) applies, then the acquiring corporation shall be

entitled to deduct such deferred expenditures attributable to the economic interest retained on a ratable basis to the same extent they would have been deductible by the distributor or transferor corporation in the absence of the distribution or transfer. See paragraph (c) of § 1.615–3 and paragraph (c) of § 1.616–2.

(3) For purposes of this section, the terms *exploration expenditures* and *development expenditures* shall have the same meaning as that ascribed to them in the regulations under sections 615 and 616 of the Internal Revenue Code of 1954, or under sections 23(cc) and 23(ff) of the Internal Revenue Code of 1939, whichever applies. See, for example, paragraph (a) of § 1.615–1 and paragraph (a) of § 1.616–1.

(b) *Effect and identification of election previously made.* (1) The election made by a distributor or transferor corporation under the provisions of section 615 or section 616 (or corresponding provisions of prior law) to defer exploration or development expenditures in respect of any taxable year may not be revoked by the acquiring corporation for any reason whatsoever.

(2) When filing its return for the first taxable year for which it deducts exploration or development expenditures which were deferred under section 615 or section 616 (or corresponding provisions of prior law) by a distributor or transferor corporation, the acquiring corporation shall attach thereto a statement properly identifying the taxable year for which the election to defer was made by the distributor or transferor corporation, the name of the corporation which made the election, and the district director with whom the election was filed.

(3) It is unnecessary for an acquiring corporation to renew an election to defer exploration or development expenditures which was made by a distributor or transferor corporation.

(c) *Successive transactions to which section 381(a) applies.* If, by virtue of section 381(c)(10), the acquiring corporation is entitled to deduct exploration or development expenditures deferred by a distributor or transferor corporation, then such acquiring corporation shall be deemed to have made the election to defer such expenditures for purposes of applying section 381(c)(10) to any subsequent transaction in which such acquiring corporation is a distributor or transferor corporation.

(d) *Carryover of limitation requirements.* (1) If a distributor or transferor corporation transfers any mineral property to the acquiring corporation in a transaction described in section 381(a) and the acquiring corporation pays or incurs exploration expenditures in a taxable year ending after the date of the distribution or transfer, then in applying the 4-year or $400,000 limitations described in section 615(c) and paragraphs (a) and (b) of § 1.615–4, whichever is applicable, the acquiring corporation shall be deemed to have been allowed any deduction which, for any taxable year ending on or before the date of distribution or transfer, was allowed to the distributor or transferor corporation under section 615(a), or under section 23(ff)(1) of the Internal Revenue Code of 1939, or to have made any election which, for any such preceding year, was made by the distributor or transferor corporation under section 615(b), or under section 23(ff)(2) of the Internal Revenue Code of 1939. Thus, in such instance, the acquiring corporation shall take into account the years in which the distributor or transferor corporation exercised the election to deduct or defer exploration expenditures and any amounts so deducted or deferred. For this purpose, it is immaterial whether the deduction has been allowed to, or the election has been made by, the distributor or transferor corporation with respect to the specific mineral property transferred by that corporation to the acquiring corporation.

(2) Generally, for purposes of applying the 4-year limitation described in paragraph (a) of § 1.615–4, if there are two or more distributor or transferor corporations that transfer any mineral property to the acquiring corporation, each taxable year of any such corporation ending on or before the date of distribution or transfer in which exploration expenditures were deducted or deferred shall be treated as a separate taxable year regardless of the fact that the taxable years of two or more such corporations normally end on the same

date. However, if the date of distribution or transfer is the same with respect to more than one distributor or transferor corporation, then the taxable years of such corporations ending on the same date of distribution or transfer shall be considered as one taxable year for purposes of applying the 4-year limitation even though more than one such corporation deducted or deferred exploration expenditures for such taxable years.

(3) For purposes of applying the $400,000 limitation described in paragraph (b) of § 1.615–4, if there are two or more distributor or transferor corporations that transfer any mineral property to the acquiring corporation, any exploration expenditures which were deducted or treated as deferred expenses by such corporations for taxable years ending after December 31, 1950, shall be taken into account by the acquiring corporation.

(4) If a distributor or transferor corporation that transfers any mineral property to the acquiring corporation was required to take into account any taxable years or amounts of its transferor, as provided by paragraph (e) of § 1.615–4, for purposes of either the 4-year limitation described in paragraph (a) of § 1.615–4 or the $400,000 limitation described in paragraph (b) of § 1.615–4, then the acquiring corporation shall also take these taxable years and amounts into account in applying the same limitations.

(5) The provisions of this paragraph may be illustrated by the following examples:

Example (1). M and N Corporations were organized on January 1, 1956, and each corporation computes its taxable income on the basis of the calendar year. For each of its taxable years 1956 and 1957, M Corporation expended $60,000 for exploration expenditures and exercised the option to deduct such amounts under section 615(a). N Corporation made no exploration expenditures during its taxable years 1956 and 1957. On December 31, 1957, M Corporation transferred all of its assets to N Corporation in a transaction to which section 381(a) applies, no gain being recognized to the transferor corporation on the transfer. N Corporation made exploration expenditures of $100,000, $120,000, $110,000, and $100,000 for the years 1958, 1959, 1960, and 1961, respectively, which expenditures it desired to deduct under section 615(a) to the extent allowable. On the basis of these facts, N Corporation may deduct up to $100,000 for each of the years 1958 and 1959. No deduction or deferral is allowable for 1960 since the benefits of section 615(c) were previously availed of for 4 taxable years. However, N Corporation may deduct $80,000 for 1961 (the 4-year limitation not applying to such year) but, if such deduction is made, N Corporation will not be allowed any further deductions or deferrals since the $400,000 limitation of paragraph (b) of § 1.615–4 will have been reached.

Example (2). R and S Corporations were organized on January 1, 1955, and each corporation computes its income on the basis of the calendar year. For the 1955 taxable year neither corporation made any exploration expenditures under section 615(a). On June 30, 1956, R Corporation transferred all its assets to S Corporation in a transaction to which section 381(a) applies, no gain being recognized to the transferor corporation on the transfer. During its short taxable year ending June 30, 1956, R Corporation made exploration expenditures of $60,000 which it elected to deduct under section 615. For its taxable year ending December 31, 1956, S Corporation may deduct or defer exploration expenditures up to $100,000 since this is a separate election for purposes of utilizing section 615 and is not affected by the $60,000 previously deducted by R Corporation. Assuming S Corporation exercises an election under section 615 for its taxable year ending December 31, 1956, S Corporation may elect to apply the benefits of section 615 to exploration expenditures for two more taxable years. However, for taxable years beginning after July 6, 1960 (the 4-year limitation not applying), S Corporation is entitled under section 615 to deduct or defer exploration expenditures made in such years to the extent that the combined deductions and deferrals by R and S Corporations in prior years did not exceed $400,000.

Example (3). O and P Corporations were organized on January 1, 1955, and each corporation computes its taxable income on the basis of the calendar year. For their taxable years 1955, 1956, and 1957, each corporation deducted exploration expenditures made in such years under section 615(a). On June 30, 1958, O Corporation transferred all its assets to P Corporation in a transaction to which section 381(a) applies, no gain being recognized to the transferor corporation on the transfer. If, during its short taxable year ending June 30, 1958, O Corporation made additional exploration expenditures, it may deduct or defer such expenditures (up to $100,000) under section 615 since O Corporation has utilized section 615 in only three previous taxable years. For its taxable years ending after June 30, 1958, and beginning before July 7, 1960, P Corporation may not deduct or defer exploration expenditures under section 615, since the benefits of that section

were utilized by O and P Corporations for 4 taxable years. However, for taxable years beginning after July 6, 1960 (the 4-year limitation not applying), P is entitled under section 615 to deduct or defer exploration expenditures made in such years to the extent that the combined deductions and deferrals by O and P Corporations in prior years do not exceed $400,000. See paragraph (b) of § 1.615–4.

Example (4). X, Y, and Z Corporations were organized on January 1, 1955, and each corporation computes its taxable income on the basis of the calendar year. For their taxable years ending December 31, 1955, X and Y Corporations each deferred $100,000 for exploration expenditures made in such taxable years under section 615(b). Z Corporation made no exploration expenditures during its taxable year ending December 31, 1955. On March 31, 1956, X and Y Corporations transferred all their assets to Z Corporation in a transaction to which section 381(a) applies, no gain being recognized to the transferor corporations on the transfer. X and Y Corporations each made exploration expenditures of $75,000 during their short taxable years ending March 31, 1956, which they deducted under section 615(a). For purposes of taxable years beginning before July 7, 1960, Z Corporation must take into account the taxable years in which X and Y Corporations deducted or deferred exploration expenditures. In so doing, each taxable year in which exploration expenditures were deducted or deferred must be taken into account except that the taxable years of X and Y Corporations ending on March 31, 1956, shall be considered as one taxable year. Therefore, Z Corporation may deduct or defer exploration expenditures in accordance with section 615 for any one taxable year ending after March 31, 1956, and beginning before July 7, 1960. However, for taxable years beginning after July 6, 1960 (the 4-year limitation not applying), Z Corporation must take into account for purposes of the $400,000 limitation all of the $350,000 of exploration expenditures deducted or deferred by X, Y, and Z Corporations during taxable years ending after December 31, 1950. Therefore, Z Corporation, assuming it has not deducted or deferred any exploration expenditures, is entitled under section 615 to deduct or defer in taxable years beginning after July 6, 1960, up to $50,000 for exploration expenditures made in such years.

Example (5). For purposes of this example, assumethat each taxpayer computes taxable income on the basis of the calendar year. Taxpayer A, an individual who has deducted exploration expenditures of $75,000 under section 23(ff) of the Internal Revenue Code of 1939 for each of his taxable years 1952 and 1953, transferred a mineral property to K Corporation on January 1, 1954, in a transaction in which the basis of the mineral property in the hands of K Corporation is determined under section 362(a). For its taxable year 1954 and pursuant to section 615(a)., K Corporation deducted exploration expenditures of $100,000 which it made in such year. K Corporation had made no exploration expenditures in any preceding taxable year. On December 31, 1954, K Corporation transferred all its assets to L Corporation in a reorganization to which section 381(a) applies, no gain being recognized to the transferor corporation on the transfer. Assuming that L Corporation has not deducted or deferred exploration expenditures in any preceding taxable year, L Corporation may deduct or defer exploration expenditures (up to $100,000) in accordance with section 615 for any one taxable year ending after December 31, 1954, and beginning before July 7, 1960, in view of the 4-year limitation. However, if L Corporation does not deduct or defer exploration expenditures in that period, then for taxable years beginning after July 6, 1960 (the 4-year limitation not applying), L Corporation is entitled to deduct or defer up to $150,000 (but not to exceed $100,000 per year) for exploration expenditures made in such years. See paragraph (b) of § 1.615–4.

[T.D. 6552, 26 FR 1988, Mar. 8, 1961, as amended by T.D. 6685, 28 FR 11406, Oct. 24, 1963]

§ 1.381(c)(11)–1 Contributions to pension plan, employees' annuity plans, and stock bonus and profit-sharing plans.

(a) *Carryover requirement.* Section 381(c)(11) provides that, for purposes of determining amounts deductible under section 404 for any taxable year, the acquiring corporation shall be considered after the date of distribution or transfer to be the distributor or transferor corporation in respect of any pension, annuity, stock bonus, or profit-sharing plan.

(b) *Nature of carryover.* (1) Primarily, section 381(c)(11) and this section apply to the amount of any unused deductions or excess contributions carryovers which, in the absence of the transaction causing section 381 to apply, would have been available to the distributor or transferor corporation under section 404. Thus, for example, this section applies to unused deductions under a profit-sharing or stock bonus trust which, in accordance with the second sentence of section 404(a)(3)(A) and § 1.404(a)–9, would have been available in succeeding taxable years to the transferor corporation if

the transfer of assets to the acquiring corporation had not occurred.

(2) Section 381(c)(11) also permits or requires the acquiring corporation to be treated as though it were the distributor or transferor corporation for the purpose of satisfying any conditions which would have been required of the distributor or transferor corporation in the absence of the distribution or transfer, so that it may be determined whether the distributor or transferor corporation, or the acquiring corporation, is entitled to take a deduction under section 404 in respect of a trust or plan established by the distributor or transferor corporation. Thus, for example, in a case when the taxable year of the transferor corporation ends on the date of transfer pursuant to section 381(b)(1), that corporation is entitled, pursuant to the provisions of section 404(a)(6) and paragraph (c) of § 1.404(a)–1, to a deduction in such taxable year for a payment to a qualified trust of that corporation made by the acquiring corporation after the close of such taxable year but within the time specified in section 404(a)(6). In further illustration, if the transferor corporation were to establish a qualified plan, and if the plan were maintained as a qualified plan by the acquiring corporation, then any contributions paid under the plan by the acquiring corporation (other than those which are deductible by the transferor corporation by reason of section 404(a)(6)) would be deductible under section 404 by the acquiring corporation even though the plan were exclusively for the benefit of former employees of the transferor corporation. Also, for example, if the transferor corporation were to adopt an annuity plan during its taxable year ending on the date of transfer, the acquiring corporation would be entitled, subject to the provisions of section 401(b) and § 1.401–5, to amend the plan so as to make it retroactively satisfy the requirements of section 401(a)(3), (4), (5), and (6) for the period beginning with the date on which the plan was put into effect.

(c) *Taxable year of deduction*. The first taxable year of the acquiring corporation in which any amount shall be allowed as a deduction to that corporation by reason of section 381(c)(11) and this section shall be its first taxable year ending after the date of distribution or transfer.

(d) *Requirements for deductions*. (1) In order for any amount paid by the acquiring corporation (other than amounts deductible under section 404(a)(5)) to be deductible by the acquiring corporation by reason of this section in respect of a trust or nontrusteed annuity plan which is established by a distributor or transferor corporation and maintained by the acquiring corporation, the contributions must be paid (or deemed to have been paid under section 404(a)(6)) by the acquiring corporation in a taxable year of that corporation which ends with or within a year of the trust for which it is exempt under section 501(a), or, in the case of a nontrusteed annuity plan, for which it meets the requirements of section 404(a)(2). See, however, section 404(a)(4) and § 1.404(a)–11 for rules relating to deductions for contributions to foreign-situs trusts. The trust or plan which is established by the distributor or transferor corporation and maintained by the acquiring corporation may separately satisfy the requirements of section 401(a) or section 404(a)(2) or may, together with other trusts or plans of the acquiring corporation, constitute a single plan which qualifies under section 401(a) or meets the requirements of section 404(a)(2).

(2) Excess contributions paid under a qualified trust or plan established by the transferor or distributor corporation may be carried over and, subject to the applicable limitations, deducted by the acquiring corporation in a taxable year ending after the date of distribution or transfer regardless of whether the trust is exempt, or the plan meets the requirements of section 404(a)(2), during such taxable year. There are, however, special rules for computing the limitations on the amount of excess contributions which are deductible in a taxable year ending after the trust or plan has terminated (see § 1.404(a)–7, paragraph (e) of § 1.404(a)–9, and paragraph (a) of § 1.404(a)–13). For this purpose, the pension, annuity, stock bonus, or profit-sharing plan of the distributor or transferor corporation under which the

excess contributions were made shall be considered continued (and not terminated) by the acquiring corporation if, after the date of distribution or transfer, the acquiring corporation continues the plan as a separate and distinct plan of its own which continues to qualify under section 401(a), or to meet the requirements of section 404(a)(2), or consolidates or replaces that plan with a comparable plan. See subparagraph (4) of this paragraph for rules relating to what constitutes a ''comparable'' plan.

(3) In order for any amount paid by the acquiring corporation to be deductible by the acquiring corporation as an unused deduction carried over from a qualified profit-sharing or stock bonus trust established by a distributor or transferor corporation, the acquiring corporation must continue such trust established by the distributor or transferor corporation as a separate and distinct trust of its own which continues to qualify under section 401(a), or must consolidate or replace that trust with a comparable trust. In addition, the amount paid by the acquiring corporation will be deductible as an unused deduction carried over from the transferor or distributor corporation only if it is paid into the profit-sharing or stock bonus trust established by the transferor or distributor corporation, or the comparable trust, in a taxable year of the acquiring corporation which ends with or within a year of such trust (or such comparable trust) for which it meets the requirements of section 401(a) and is exempt under section 501(a). See subparagraph (4) of this paragraph for rules relating to what constitutes a ''comparable'' trust.

(4) For purposes of subparagraphs (2) and (3) of this paragraph, a plan under which deductions are determined pursuant to paragraph (1) or (2) of section 404(a) shall be considered comparable to another plan under which deductions are determined pursuant to either of those paragraphs, and a plan under which deductions are determined pursuant to paragraph (3) of section 404(a) shall be considered comparable to another plan under which deductions are determined pursuant to such paragraph (3). Thus, a profit-sharing plan (which qualifies under section 401(a)) established by the transferor or distributor corporation shall, for purposes of subparagraphs (2) and (3) of this paragraph, be considered terminated if, after the date of distribution or transfer, the acquiring corporation transfers the funds accumulated under the profit-sharing plan into a pension plan covering the same employees. In such a case, excess contributions paid under the profit-sharing plan by the distributor or transferor corporation may be carried over and deducted by the acquiring corporation in a taxable year ending after the date of distribution or transfer subject to the limitations in section 404(a)(3)(A) computed in accordance with the rules in paragraph (e)(2) of § 1.404(a)–9 for computing limitations when a profit-sharing plan has terminated. On the other hand, unused deductions attributable to the profit sharing plan may not be carried over and used by the acquiring corporation as a basis for deducting amounts contributed by it to the pension plan.

(e) *Effect of consolidation or replacement of plan on prior contributions.* If a pension, annuity, stock bonus, or profit-sharing plan which was established by a distributor or transferor corporation is terminated after the date of distribution or transfer because of consolidation or replacement with a comparable plan of the acquiring corporation, then the contributions paid to or under its plan by the distributor or transferor corporation on or before the date of distribution or transfer shall not be disallowed under section 404 merely because of the termination of the plan which was established by that corporation, provided that the termination does not cause the plan to fail to qualify under section 401(a).

(f) *Amounts deductible under section 404.* Section 381(c)(11) and this section apply only to amounts which are otherwise deductible under section 404 and the regulations thereunder. See §§ 1.404(a)–1 through 1.404(d)–1. Thus, to be deductible by reason of this section, contributions paid by the acquiring corporation must be expenses which otherwise satisfy the conditions of section 162 (relating to trade or business expenses). No deduction shall be allowed by reason of section 381(c)(11) and this section for a contribution

which is allowable under section 162 but is not allowable under section 404. Thus, the acquiring corporation shall not be allowed a deduction by reason of this section in respect of a plan established by a distributor or transferor corporation if the contribution would not otherwise be deductible under section 404 by reason of section 404(c) and § 1.404(c)–1. On the other hand, any unused deductions or excess contributions of a distributor or transferor corporation which are carried over from 1939 Code years shall be deductible by the acquiring corporation if the requirements of this section, section 404(d), and § 1.404(d)–1 are satisfied.

(g) *Cost of past service credits.* In computing the cost of past service credits under a plan with respect to employees of the distributor or transferor corporation, the acquiring corporation may include the cost of credits for periods during which the employees were in the service of the distributor or transferor corporation.

(h) *Separate carryovers required.* The excess contributions which are available to a distributor or transferor corporation under the provisions of section 404(a)(1)(D) and section 404(a)(3)(A) at the close of the date of distribution or transfer and are carried over to the acquiring corporation under this section shall be kept separate and distinct from each other and from any excess contributions which are available to the distributor or transferor corporation at that time under the provisions of section 404(a)(7) and are carried over to the acquiring corporation under this section. If there are excess contributions carried over to the acquiring corporation from more than one transferor or distributor corporation, the excess contributions of each transferor or distributor corporation shall be kept separate and distinct from those of the other transferor or distributor corporations and, with respect to each such transferor or distributor corporation, shall be kept separate and distinct as provided in the preceding sentence. See, however, paragraph (i) of this section for rules for applying the provisions of section 404(a)(3)(A) when the acquiring corporation maintains two or more profit-sharing or stock bonus trusts, one or more of which was established by a distributor or transferor corporation. The requirements in this paragraph shall apply with respect to any excess contributions which are carried over to the acquiring corporation from a distributor or transferor corporation under the provisions of section 404(d) and this section.

(i) *Limitations applicable to profit-sharing or stock bonus trusts.* When contributions are paid by the acquiring corporation after the date of distribution or transfer to two or more profit-sharing or stock bonus trusts, and one or more of such trusts was established by a distributor or transferor corporation, such trusts shall be considered as a single trust in applying the provisions of section 404(a)(3)(A) under this section. Accordingly, in determining its secondary limitation, and its excess contributions carryover, under section 404(a)(3)(A) and § 1.404(a)–9 in any taxable year ending after the date of distribution or transfer, the acquiring corporation shall take into accounts its primary limitations, and the deductions allowed or allowable to it, for all prior years under the limitations provided in those sections, and also the primary limitations of, and deductions allowed or allowable to, the distributor or transferor corporation or corporations for all prior years under the limitations provided in those sections.

(j) *Successive carryovers.* The provisions of section 381(c)(11) and this section shall apply to an acquiring corporation which, in a distribution or transfer to which section 381(a) applies acquires the assets of a distributor or transferor corporation which has previously acquired the assets of another corporation in a transaction to which section 381(a) applies, even though, in computing an unused deductions or excess contributions carryover to the second acquiring corporation, it is necessary to take into account contributions paid by, and limitations applicable to, the first distributor or transferor corporation.

(k) *Information to be furnished by acquiring corporation.* The acquiring corporation shall furnish such information with respect to a plan established by a distributor or transferor corporation as will, consistently with the principles of

section 404, establish that the provisions of such section and this section apply. For purposes of this section, the district director may require any other information that he considers necessary to determine deductions allowable under section 404 and this section or qualification under section 401. Any unused deductions or excess contributions carried over from a distributor or transferor corporation pursuant to this section shall be properly identified with the corporation which would have been permitted to use those deductions or contributions in the absence of the transaction causing section 381 to apply.

(l) *Illustration*. The application of this section may be illustrated by the following example:

Example. In 1955, X Corporation, which makes its return on the basis of the calendar year, paid $400,000 to completely fund past service credits under a qualified pension plan and deducted 10 percent ($40,000) of that cost in each of the taxable years 1955, 1956, and 1957. The pension plan established by X Corporation had an anniversary date of January 1. On December 31, 1957, on which date the undeducted part of the cost amounted to $280,000, X Corporation transferred all its assets to Y Corporation in a statutory merger to which section 361 applies. Y Corporation, which also makes its return on the basis of the calendar year, had a qualified pension plan and trust which also had an anniversary date of January 1. Since Y Corporation had many more employees than X Corporation on the date of transfer, it covered the former employees of X Corporation under its own plan. Y Corporation is entitled to deductions under section 404(a)(1)(D) and this section in 1958 and succeeding taxable years, in order of time, with respect to the undeducted balance of $280,000, to the extent of the difference between the amount paid and deductible by that corporation in each such taxable year and the maximum amount deductible by that corporation for such taxable year in accordance with the applicable limitations of section 404(a)(1). In computing the maximum amount deductible by Y Corporation for 1958 and 1959 under section 404(a)(1)(C), that corporation may include $40,000 for each year, the amount that X Corporation could have included for each of those years in computing the maximum amount that would have been deductible by X Corporation under section 404(a)(1)(C) if the merger had not occurred. Thus, assuming that Y Corporation's appropriate limitation so computed under section 404(a)(1)(C) is $1,000,000 (including the $40,000 carried over from X Corporation under this section) for each of those taxable years, and that Y Corporation contributed $925,000 to its trust in 1958 and $975,000 in 1959, then Y Corporation is entitled under section 404(a)(1)(D) and this section to deduct in 1958 $75,000, and in 1959 $25,000, of the amount ($280,000) carried over from X Corporation. The undeducted balance of such amount ($180,000) available to Y Corporation on December 31, 1959, would be deductible by that corporation in succeeding taxable years in accordance with section 404(a)(1)(D) and this section.

[T.D. 6556, 26 FR 2405, Mar. 22, 1961, as amended by T.D. 7168, 37 FR 5024, Mar. 9, 1972]

§ 1.381(c)(12)–1 Recovery of bad debts, prior taxes, or delinquency amounts.

(a) *Carryover requirement*. (1) If, as a result of a distribution or transfer to which section 381(a) applies, the acquiring corporation is entitled to the recovery of a bad debt, prior tax, or delinquency amount on account of which a deduction or credit was allowed to a distributor or transferor corporation for a prior taxable year, and such debt, tax, or amount is recovered by the acquiring corporation after the date of distribution or transfer, then under the provisions of section 381(c)(12) the acquiring corporation is required to include in its gross income for the taxable year of recovery the same amount of income attributable to the recovery as the distributor or transferor corporation would have been required to include under section 111 and the regulations thereunder had the distribution or transfer not occurred.

(2) The rule prescribed by paragraph (a)(1) of this section and by section 381(c)(12) with respect to bad debts, prior taxes, and delinquency amounts applies equally with respect to the recovery by the acquiring corporation of all other losses, expenditures, and accruals made on the basis of deductions from the gross income of a distributor or transferor corporation for prior taxable years, including war losses referred to in section 127 of the Internal Revenue Code of 1939, but not including deductions with respect to depreciation, depletion, amortization, or amortizable bond premiums. An item which is not a ''section 111 item'' for purposes of the regulations under section 111 is not subject to the provisions of section 381(c)(12). The provisions of section

111(c) shall be applied with respect to a recovery by the acquiring corporation in the same manner as they would have been applied by the distributor or transferor corporation.

(b) *Amount of recovery exclusion allowable for year of recovery*. For the year of any recovery by the acquiring corporation, the amount of the recovery exclusion for the original taxable year shall be determined in accordance with paragraph (b) of § 1.111–1. For the purpose of this paragraph and section 381(c)(12), the recovery exclusion for any year with respect to section 111 items of the acquiring corporation shall be kept separate from the recovery exclusion for any year with respect to section 111 items of each distributor or transferor corporation. The recovery by the acquiring corporation of any section 111 item of such corporation after the date of the distribution or transfer shall be considered separately from recoveries by the acquiring corporation of any such item which was deducted or credited by a distributor or transferor corporation. Any recovery by the acquiring corporation of a section 111 item shall be excluded from the gross income of the acquiring corporation to the extent of the recovery exclusion (1) determined for the original year for which that item was deducted or credited by the specific corporation which claimed the deduction or credit and (2) reduced by the excludable recoveries (whether made by the acquiring corporation, or by the distributor or transferor corporation) in intervening years with respect to the recovery exclusion of such corporation for such original year. There shall be taken into account the effect of net operating loss carryovers and carrybacks or capital loss carryovers.

(c) *Illustration of carryover of recovery exclusion*—(1) *Facts*. (i) The application of section 381(c)(12) may be illustrated by the following example. M and N Corporations are both organized on January 1, 1957, and both corporations compute their taxable income on the basis of the calendar year. On December 31, 1959, M Corporation transfers all its assets to N Corporation in a reorganization to which section 381(a) applies.

(ii) The section 111 items of the two corporations for the following taxable years are as follows, identification of such items being made by an appropriate letter:

Taxable year of deduction or credit	M Corporation (transferor)	N Corporation (acquirer)
1957	$500(g)	$200(h)
1958	300(i)	400(j)
1959	600(k)	100(m)

(iii) The recovery exclusions in respect of such taxable years, computed in accordance with § 1.111–1(b)(2), are assumed to be as follows:

Taxable year	M Corporation (transferor)	N Corporation (acquirer)
1957	$400	$150
1958	200	300
1959	500	75

(iv) The recoveries of the above-mentioned section 111 items by the two corporations are as follows:

Taxable year of recovery	M Corporation (transferor)	N Corporation (acquirer)
1958	$25 (g)	$50 (h)
1959	50 (g)	20 (h)
	30 (i)	15 (j)
1960		350 (g)
		225 (i)
		550 (k)
		100 (h)
		350 (j)
		85 (m)

(2) *M Corporation's 1958 recovery*.

Total recovery of section 111 items for 1957		$25
Less: Recovery exclusion for 1957		400
Amount included in gross income of M Corporation for 1958		0

(3) *M Corporation's 1959 recoveries*.

(i) Total recovery of section 111 items for 1957		$50
Less: Recovery exclusion for 1957	$400	
Minus excludable recovery	25	
		375
Amount included in gross income of M Corporation for 1959		0
(ii) Total recovery of section 111 items for 1958		30
Less: Recovery exclusion for 1958		200
Amount included in gross income of M Corporation for 1959		0

(4) *N Corporation's 1958 recovery*.

Total recovery of section 111 items for 1957	$50
Less: Recovery exclusion for 1957	150
Amount included in gross income of N Corporation for 1958	0

(5) *N Corporation's 1959 recoveries.*

(i) Total recovery of section 111 items for 1957		$20
Less: Recovery exclusion for 1957	$150	
Minus excludable recovery in 1958	50	
		100
Amount included in gross income of N Corporation for 1959		0
(ii) Total recovery of section 111 items for 1958		15
Less: Recovery exclusion for 1958		300
Amount included in gross income of N Corporation for 1959		0

(6) *N Corporation's 1960 recoveries.*

(i) Total recovery of section 111 items of M Corporation for 1957			$350
Less: Recovery exclusion of M Corporation for 1957			$400
Minus:			
Excludable recovery in 1959	$50		
Excludable recovery in 1958	25		
		75	
			325
Amount included in gross income of N Corporation for 1960			25
(ii) Total recovery of section 111 items of M Corporation for 1958			225
Less: Recovery exclusion of M Corporation for 1958		$200	
Minus excludable recovery in 1959		30	
			170
Amount included in gross income of N Corporation for 1960			55
(iii) Total recovery of section 111 items of M Corporation for 1959			550
Less: Recovery exclusion of M Corporation for 1959			500
Amount included in gross income of N Corporation for 1960			50
(iv) Total recovery of section 111 items of N Corporation for 1957			100
Less: Recovery exclusion of N Corporation for 1957		$150	
Minus:			
Excludable recovery in 1959	$20		
Excludable recovery in 1958	50		
		70	
			80
Amount included in gross income of N Corporation for 1960			20
(v) Total recovery of section 111 items of N Corporation for 1958			$350
Less: Recovery exclusion of N Corporation for 1958		$300	
Minus excludable recovery in 1959		15	
			285
Amount included in gross income of N Corporation for 1960			65
(vi) Total recovery of section 111 items of N Corporation for 1959			85
Less: Recovery exclusion of N Corporation for 1959			75
Amount included in gross income of N Corporation for 1960			10

(7) *Summary of recoveries included in gross income of N Corporation for 1960.*

(i) Recovery of M Corporation items for:		
1957	$25	
1958	55	
1959	50	
		$130
(ii) Recovery of N corporation items for:		
1957	20	
1958	65	
1959	10	
		95
Total amount included in gross income		225

[T.D. 6559, 26 FR 2984, Apr. 7, 1961]

§ 1.381(c)(13)–1 Involuntary conversions.

(a) *Carryover requirement*—(1) *General rule.* Section 381(c)(13) requires that after the date of distribution or transfer the acquiring corporation, in a transaction to which section 381(a) applies, shall be treated as the distributor or transferor corporation for purposes of applying section 1033, relating to involuntary conversions. This rule shall apply even though the property similar or related in service or use to the property converted, or the stock of a corporation owning such similar property, is purchased by the acquiring corporation after the date of distribution or transfer and is not received from the distributor or transferor corporation in the transaction to which section 381(a) applies. Accordingly, if any factor essential to the application of section 1033 occurs on or before the date of distribution or transfer and any other such factor also occurs after that date, then, in accordance with section 381(c)(13) and this section, the provisions of section 1033 shall apply to the acquiring corporation in the same manner that they would have applied to the distributor or transferor corporation in the absence of the distribution or transfer. For purposes of this section, the terms *involuntary conversion* and *disposition of the converted property* shall have the meaning ascribed to them by the regulations under section 1033.

(2) *Application to other transactions.* The provisions of this section shall apply to any transaction which, under provisions of the Internal Revenue

Code of 1954, is treated as though it were an involuntary conversion within the meaning of section 1033. See, for example, section 1071, relating to gain from a sale or exchange to effectuate the policies of the Federal Communications Commission; and sections 1332(b)(3) and 1333(3), relating to war loss recoveries.

(b) *Conversion into similar property.* Section 1033(a)(1) provides that no gain shall be recognized if property is involuntarily converted only into property which is similar or related in service or use to the property so converted. If there is a disposition of property of a distributor or transferor corporation and, subsequent to the date of distribution or transfer, property similar or related in service or use to the property disposed of is received by the acquiring corporation as compensation for the property so disposed of, then no gain shall be recognized to the acquiring corporation, provided that no gain would have been recognized under section 1033(a)(1) if the similar property had been received directly by the distributor or transferor corporation.

Example. Property of S Corporation with an adjusted basis of $100 is condemned by the local government. Shortly after the property is so condemned, S Corporation liquidates and distributes its assets to P Corporation in a distribution to which section 381(a) applies. Subsequent to the date of distribution, P Corporation receives from the government (in settlement of the condemnation proceedings) property with a market value of $500 which is similar or related in service or use to the property so condemned. No gain is recognized to either corporation upon P Corporation's receipt of the similar property, and the property so received has a basis of $100 in the hands of P Corporation on the date of its acquisition.

(c) *Conversion into money or dissimilar property when disposition occurs after December 31, 1950*—(1) *General rule.* Section 1033(a)(3) and § 1.1033(a)–2 provide rules for involuntary conversions of property into money or dissimilar property where the disposition of the converted property occurs after December 31, 1950. In such a case, the gain on the conversion, if any, shall be recognized, at the election of the taxpayer, only to the extent that the amount realized on the conversion exceeds the cost of other property purchased by the taxpayer which is similar or related in service or use to the property so converted, or exceeds the cost of stock purchased by the taxpayer in the acquisition of control of a corporation owning such other property, provided (i) the taxpayer purchases such other property or stock for the purpose of replacing the property so converted and (ii) the purchase occurs during the period of time specified in section 1033(a)(3)(B). The provisions of this paragraph shall apply to involuntary conversions where the disposition of the property occurs after December 31, 1950, and where the election to have section 1033(a)(3) apply to the treatment of the gain upon the conversion is contingent upon activities of both the distributor or transferor corporation and the acquiring corporation. For purposes of section 381(c)(13), the period of time specified in section 1033(a)(3)(B) shall be determined by taking into account taxable years of, and extensions of time granted to, both the distributor or transferor corporation and the acquiring corporation.

(2) *Replacement period.* The period during which the purchase of similar property or stock must be made in order to prevent the recognition of gain on the involuntary conversion terminates 2 years (or, in the case of a disposition occurring before Dec. 31, 1969, 1 year) after the close of the first taxable year in which any part of the gain upon the conversion is realized, or at the close of such later date as may be designated pursuant to an application of the taxpayer. See paragraph (c)(3) of § 1.1033(a)–2. Therefore, if, in a case to which this subparagraph applies, the first taxable year in which gain is realized is the taxable year of the distributor or transferor corporation ending with the close of the date of distribution or transfer, the acquiring corporation will have a maximum of only 2 years (or, in the case of a disposition occurring before Dec. 31, 1969, 1 year) after that date in which to purchase the similar property or stock, unless an extension of time has been granted upon application by the distributor, transferor, or acquiring corporation

within the time prescribed. See paragraph (a) of § 1.381(b)–1 as to the termination of the taxable year of the distributor or transferor corporation. See paragraph (c)(3) of § 1.1033(a)–2 as to applications to extend the period within which to replace the converted property. In addition to the information otherwise required under paragraph (c)(3) of § 1.1033(a)–2, the application shall contain sufficient detail in connection with the distribution or transfer to establish that section 381(c)(13) applies to the involuntary conversion involved.

(3) *Examples.* The application of this paragraph may be illustrated by the following examples:

Example (1). A and B Corporations compute their taxable income on the basis of the calendar year, and both corporations use the cash method of accounting. During 1970 property of A Corporation is destroyed by fire, and in January 1971, A Corporation receives $15,000 from an insurance company as compensation for its loss of property. The adjusted basis of the property on the date of destruction is $10,000; as a consequence, A Corporation realizes a gain of $5,000 on the involuntary conversion. On June 30, 1971, B Corporation acquires all of the assets of A Corporation in a reorganization to which section 381(a) applies. In accordance with paragraph (c)(2) of § 1.1033(a)–2, A Corporation reports in its return for the short taxable year ending June 30, 1971, all the details in connection with the involuntary conversion but does not include the realized gain in gross income, thereby electing to have the gain recognized only to the extent provided in section 1033(a)(3). On June 15, 1973, B Corporation purchases for $20,000 property which is similar or related in service or use to the property previously destroyed. In its return for 1973, B Corporation reports all of the details in connection with its replacement of the property, as required by paragraph (c)(2) of § 1.1033(a)–2. As a result of this replacement by B Corporation, none of the gain realized by A Corporation is recognized. The replacement property which is purchased by B Corporation has a basis to that corporation of $15,000 on the date of its purchase, that is, the cost of such property ($20,000) decreased by the amount of gain not recognized to A Corporation on the involuntary conversion ($5,000).

Example (2). Assume the same facts as in *Example (1)*, except that B Corporation does not purchase similar property on or before June 30, 1973, and does not apply on or before that date (in accordance with paragraph (c)(3) of § 1.1033(a)–2) for an extension of time in which to make a replacement. In such event, the gain realized by A Corporation is recognized to that corporation for its taxable year ending June 30, 1971. A Corporation's tax liability for such taxable year must be recomputed in accordance with paragraph (c)(2) of § 1.1033(a)–2 in order to reflect this additional income.

Example (3). Assume the same facts as in *Example (1)*, except that the property of A Corporation is destroyed in 1968, A Corporation receives the $15,000 from an insurance company in January 1969, B Corporation acquires all of the assets of A Corporation on June 30, 1969, and A Corporation's return is filed for the short taxable year ending June 30, 1969. B Corporation would have to purchase property which is similar or related in service or use to the property previously destroyed by June 30, 1970, in order to take advantage of the provisions of section 1033.

Example (4). M and N Corporations compute their taxable income on the basis of the calendar year, and both corporations use the cash method of accounting. During 1970, property of M Corporation is destroyed by fire. The adjusted basis of the property on the date of destruction is $10,000. The property is insured against loss by fire, but the insurance claim is not satisfied on or before June 30, 1971, the date on which N Corporation acquires all of the assets (including the insurance claim) of M Corporation in a reorganization to which section 381(a) applies. On September 1, 1972, N Corporation receives $15,000 from the insurance company as compensation for the fire loss suffered by M Corporation. Upon receipt of the insurance proceeds, N Corporation realizes a gain of $5,000 upon the involuntary conversion; however, in its return for 1972, N Corporation elects under the provisions of paragraph (c)(2) of § 1.1033(a)–2 to have the gain recognized only to the extent provided by section 1033(a)(3). On December 30, 1974, N Corporation purchases for $20,000 property which is similar or related in service or use to the property previously destroyed in the hands of M Corporation. As a result of this replacement by N Corporation, none of the gain realized by N Corporation in 1972 is recognized. The replacement property which is purchased by N Corporation has a basis to that corporation of $15,000 on the date of its purchase, that is, the cost of such property ($20,000) decreased by the amount of gain not recognized to N Corporation on the involuntary conversion ($5,000).

Example (5). R and S Corporations compute their taxable income on the basis of the calendar year, and both corporations use the cash method of accounting. During 1970 property of R Corporation is destroyed by fire. The adjusted basis of the property on the date of destruction is $10,000. In anticipation of taking the benefit of section 1033(a)(3), R Corporation purchases for $20,000 on June 1, 1971, property which is similar or related in

service or use to the destroyed property. In its return for 1971, R Corporation reports all of the details in connection with the replacement of the property, as required by paragraph (c)(2) of § 1.1033(a)–2. The property destroyed in 1970 is insured against loss by fire, but the insurance claim is not satisfied on or before March 1, 1972, the date on which S Corporation acquires all of the assets (including the insurance claim) of R Corporation in a reorganization to which section 381(a) applies. On October 1, 1972, S Corporation receives $12,000 from the insurance company as compensation for the fire loss suffered by R Corporation. Upon receipt of the insurance proceeds, S Corporation realizes a gain of $2,000 upon the involuntary conversion; however, in its return for 1972, S Corporation elects under the provisions of paragraph (c)(2) of § 1.1033(a)–2 to have the gain recognized only to the extent provided by section 1033(a)(3). As a result of the replacement by R Corporation, none of the gain realized by S Corporation in 1972 is recognized. Assuming there are no adjustments for depreciation, the replacement property has a basis on October 1, 1972, of $18,000, that is, the cost of such property ($20,000) decreased by the amount of gain not recognized to S Corporation on the involuntary conversion ($2,000)

(d) *Conversion into money when disposition occurs before January 1, 1951.* Section 1033(a)(2) provides that, if property is disposed of in an involuntary conversion before January 1, 1951, and money is received as compensation for the conversion, no gain shall be recognized if such money is forthwith expended in the acquisition of other property similar or related in service or use to the property so converted, or in the acquisition of control of a corporation owning such other property, or in the establishment of a replacement fund. That section also provides that, if any part of the money is not so expended, the gain, if any, shall be recognized to the extent of the money which is not so expended. For example, if, pursuant to section 381(c)(13) and section 1033(a)(2), property of a distributor or transferor corporation is disposed of before January 1, 1951, in an involuntary conversion, and the proceeds from the conversion are received by the acquiring corporation so that the gain on the conversion is realized by that corporation, the acquiring corporation may avoid recognition of the gain if it complies with the provisions of section 1033(a)(2) for nonrecognition of gain. Thus, the acquiring corporation must forthwith expend the proceeds in the acquisition of similar property or stock, or in the establishment of a replacement fund, in order to avoid recognition of the gain, if the disposition occurred before January 1, 1951. See the provisions of §§ 1.1033(a)–3 and 1.1033(a)–4 relating to involuntary conversions and replacement funds when disposition of the converted property occurred before January 1, 1951.

(e) *Successive acquiring corporations.* An acquiring corporation which, in a transaction to which section 381(a) applies, acquires the assets of a corporation which previously acquired the assets of another corporation in a transaction to which section 381(a) applies, shall be treated as such other corporation for purposes of applying sections 381(c)(13) and 1033 (relating to involuntary conversions). Thus, for example, if any factor essential to the application of section 1033 occurs on or before the date of distribution or transfer in one transaction to which section 381(a) applies, and any other such factor occurs after the date of distribution or transfer in a subsequent transaction to which section 381(a) applies, then the acquiring corporation in such subsequent transaction shall be treated as the first distributor or transferor corporation subject to the rules and limitations of this section for purposes of sections 381(c)(13) and 1033.

[T.D. 6552, 26 FR 1989, Mar. 8, 1961, as amended by T.D. 7075, 35 FR 17995, Nov. 24, 1970]

§ 1.381(c)(14)–1 Dividend carryover to personal holding company.

(a) *Carryover requirement.* Section 381(c)(14) provides that an acquiring corporation shall succeed to and take into account the dividend carryover (described in section 564) of a distributor or transferor corporation in computing its dividends paid deduction under section 561 for taxable years ending after the date of distribution or transfer for which the acquiring corporation is a personal holding company under section 542. To determine the amount of such dividend carryover and to integrate it with the dividend carryover of the acquiring corporation in computing the dividends paid deduction for taxable years ending after the

date of distribution or transfer, it is necessary to apply the provisions of section 564 and § 1.564–1 in accordance with this section.

(b) *Manner of computing dividend carryover*—(1) *Preceding taxable years.* If the acquiring corporation is a personal holding company under section 542 for its first taxable year ending after the date of distribution or transfer, the taxable year of the distributor or transferor corporation ending with such date is a first preceding taxable year for purposes of section 564, and the taxable year of the distributor or transferor corporation immediately preceding such first preceding year is a second preceding taxable year for purposes of section 564. If the acquiring corporation is a personal holding company for its second taxable year ending after the date of distribution or transfer, the taxable year of the distributor or transferor corporation ending with such date is a second preceding taxable year for purposes of section 564.

(2) *Determination of dividends paid deduction and taxable income.* The dividends paid deduction of any distributor or transferor corporation (determined under section 561 but without regard to any dividend carryover) and the taxable income of any such corporation (adjusted as provided in section 545(b)) for any taxable year ending on or before the date of distribution or transfer shall be determined without reference to any dividends paid deduction, or taxable income, of the acquiring corporation or any other distributor or transferor corporation; in like manner, the dividends paid deduction and the taxable income of the acquiring corporation for any such taxable year shall be determined without reference to any dividends paid deduction, or taxable income, of a distributor or transferor corporation.

(3) *Computation of dividend carryover.* (i) For the purpose of determining the dividend carryover to the first taxable year of the acquiring corporation ending after the date of distribution or transfer, the amount of the dividend carryover from the distributor or transferor corporation shall be determined under section 564 without reference to the dividends paid deduction or taxable income of the acquiring corporation or any other corporation. If two or more transactions to which section 381(a) applies have the same date of distribution or transfer, or if a particular taxable year of the acquiring corporation is the first taxable year ending after the dates of distribution or transfer of two or more such transactions occurring on different dates, the amount of the dividend carryover from each distributor or transferor corporation shall be determined separately as provided in the preceding sentence. Except as provided in subdivision (iii) of this subparagraph, the aggregate of the dividend carryovers from each distributor or transferor corporation and the dividend carryover of the acquiring corporation (computed without regard to this section) shall constitute the dividend carryover under section 561(a)(3) of the acquiring corporation for its first taxable year ending after the date (or dates) of distribution or transfer.

(ii) For the purpose of determining the dividend carryover to the second taxable year of the acquiring corporation ending after the date (or dates) of distribution or transfer, the excess, if any, of the dividends paid deduction (determined under section 561 without regard to any dividend carryover) over the taxable income (adjusted as provided in section 545(b)) for the taxable year of each distributor or transferor corporation and the acquiring corporation referred to as a second preceding taxable year shall be determined separately without reference to the dividends paid deduction or taxable income of any other of such corporations. The excesses thus determined shall be aggregated, and such aggregate shall be—

(*a*) Increased by the excess of the dividends paid deduction (determined without regard to any dividend carryover) over the taxable income (adjusted as provided in section 545(b)), or

(*b*) Reduced by the excess of the taxable income (adjusted as provided in section 545(b)) over the dividends paid deduction (determined without regard to any dividend carryover),

for the first preceding taxable year of the acquiring corporation. Except as provided in subdivision (iii) of this subparagraph, the amount thus determined shall constitute the dividend

carryover under section 561(a)(3) of the acquiring corporation for its second taxable year ending after the date (or dates) of distribution or transfer.

(iii) If a particular taxable year of the acquiring corporation is its first taxable year ending after the date (or dates) of distribution or transfer of one or more transactions to which section 381(a) applies, and if the same taxable year of the acquiring corporation is also its second taxable year ending after the date (or dates) of distribution or transfer of one or more other transactions to which section 381(a) applies, then, for the purpose of determining the dividend carryover to such taxable year of the acquiring corporation, the rules contained in both subdivisions (i) and (ii) of this subparagraph shall be applied. Insofar as such taxable year constitutes the first taxable year ending after the date (or dates) of distribution or transfer of any transaction, the amount of the dividend carryover from any distributor or transferor corporation involved in such transaction shall be determined separately as provided in subdivision (i) of this subparagraph. Insofar as such taxable year constitutes the second taxable year ending after the date (or dates) of distribution or transfer of any transaction, the amount of the dividend carryover from any distributor or transferor corporation involved in the transaction and the acquiring corporation shall be determined as provided in subdivision (ii) of this subparagraph. The aggregate of the dividend carryovers thus determined shall constitute the dividend carryover under section 561(a)(3) of the acquiring corporation for such taxable year. See *Example (4)* in paragraph (c) of this section.

(c) *Illustrations.* The rules set forth in paragraphs (a) and (b) of this section may be illustrated by the following examples:

Example (1) —(i) *Facts.* N Corporation acquired on June 30, 1960, all the assets of M Corporation in a reorganization to which section 381(a) applies. Both corporations compute taxable income on the basis of the calendar year. N Corporation is a personal holding company for its taxable years ending December 31, 1960, and December 31, 1961.

(ii) *Dividend carryover to N Corporation's taxable year ending December 31, 1960.* With respect to N Corporation's taxable year ending December 31, 1960, the taxable years referred to as first preceding taxable years and second preceding taxable years are—

(*a*) M Corporation's taxable years ending June 30, 1960, and December 31, 1959, respectively; and

(*b*) N Corporation's taxable years ending December 31, 1959, and December 31, 1958, respectively.

The dividend carryover to N Corporation's taxable year ending December 31, 1960, is $22,000 computed as follows, assuming the dividends paid deduction before dividend carryovers, and the taxable income after section 545(b) adjustments, to be as stated in the computation:

	M Corporation		*N Corporation*
Second preceding taxable year:			
Dividends paid deduction	$25,000		$12,000
Taxable income	15,000		13,000
Excess dividends paid deduction		$10,000	
First preceding taxable year:			
Dividends paid deduction	23,000		20,000
Taxable income	21,000		10,000
Excess dividends paid deduction	2,000		$10,000
Separate dividend carryovers	12,000		10,000

The aggregate dividend carryover of $22,000 is the sum of $12,000 (the separate dividend carryover from M Corporation) and $10,000 (the separate dividend carryover from N Corporation's own preceding taxable years).

(iii) *Dividend carryover to N Corporation's taxable year ending December 31, 1961.* With respect to N Corporation's taxable year ending December 31, 1961, the first preceding taxable year is N Corporation's taxable year ending December 31, 1960; and the taxable years referred to as second preceding taxable years are M Corporation's taxable year ending June 30, 1960, and N Corporation's taxable year ending December 31, 1959. The dividend carryover to N Corporation's taxable year ending December 31, 1961, is $17,000 computed as follows, assuming the dividends paid deduction before dividend carryovers, and the

taxable income after section 545(b) adjustments, to be as stated in the computation:

Second preceding taxable year	M Corporation	N Corporation
Dividends paid deduction	$23,000	$20,000
Taxable income	21,000	10,000
Separate excess of dividends paid deduction over taxable income	2,000	10,000

The aggregate excess of dividends paid deduction over taxable income for the second preceding taxable year is $12,000, the sum of $2,000 (separate excess from N Corporation) and $10,000 (separate excess from N Corporation). Such aggregate excess is increased by the excess dividends paid deduction, or is reduced by the excess of taxable income, for the first preceding taxable year as follows:

Aggregate excess of dividends paid deduction for second preceding taxable year		$12,000
Dividends paid deduction of N Corporation for first preceding taxable year	$50,000	
Taxable income of N Corporation for first preceding taxable year	45,000	
		$5,000
Dividend carryover to N Corporation's taxable year ending December 31, 1961		17,000

Example (2) —(i) *Facts.* X Corporation is organized on May 1, 1956, and computes its taxable income on the basis of the fiscal year ending April 30. Y Corporation and Z Corporation are both organized on January 1, 1955, and both compute their taxable income on the basis of the calendar year. On July 31, 1957, X Corporation and Y Corporation transfer all their assets to Z Corporation in a statutory merger to which section 381(a) applies. For its taxable years ending December 31, 1957, and December 31, 1958, Z Corporation is a personal holding company.

(ii) *Dividend carryover to Z Corporation's taxable year ending December 31, 1957.* With respect to Z Corporation's taxable year ending December 31, 1957, the taxable years referred to as first preceding taxable years and second preceding taxable years are—

(*a*) X Corporation's taxable years ending July 31, 1957, and April 30, 1957, respectively;

(*b*) Y Corporation's taxable years ending July 31, 1957, and December 31, 1956, respectively; and

(*c*) Z Corporation's taxable years ending December 31, 1956, and December 31, 1955, respectively.

The dividend carryover to Z Corporation's taxable year ending December 31, 1957, is $40,000 computed as follows, assuming the dividends paid deduction before dividend carryovers, and the taxable income after section 545(b) adjustments, to be as stated in the computation:

	X Corporation		*Y Corporation*		*Z Corporation*	
Second preceding taxable year:						
Dividends paid deduction	$56,000		$19,000		$6,000	
Taxable income	24,000		17,000		5,000	
Excess		$32,000		$2,000		$1,000
First preceding taxable year:						
Dividends paid deduction	9,000		4,000		10,000	
Taxable income	7,000		8,000		5,000	
Excess		2,000		(4,000)		5,000
Separate dividend carryovers		34,000		0		6,000

The aggregate dividend carryover of $40,000 is the sum of $34,000 (the separate dividend carryover from X Corporation) and $6,000 (the separate dividend carryover from Z Corporation's own preceding taxable years).

(iii) *Dividend carryover to Z Corporation's taxable year ending December 31, 1958.* With respect to Z Corporation's taxable year ending December 31, 1958, the first preceding taxable year is Z Corporation's taxable year ending December 31, 1957; and the taxable years referred to as second preceding taxable years are X Corporation's taxable year ending July 31, 1957, Y Corporation's taxable year ending July 31, 1957, and Z Corporation's taxable year ending December 31, 1956. The dividend carryover to Z Corporation's taxable year ending December 31, 1958, is $1,000 computed as follows, assuming the dividends paid deduction before dividend carryovers, and the taxable income after section 545(b) adjustments, to be as stated in the computation:

	X Corporation	*Y Corporation*	*Z Corporation*
Second preceding taxable year:			
Dividends paid deduction	$9,000	$4,000	$10,000
Taxable income	7,000	8,000	5,000

	X Corporation	Y Corporation	Z Corporation
Separate excess of dividends paid deduction over taxable income	2,000	0	5,000

The aggregate excess of dividends paid deduction over taxable income for the second preceding taxable year is $7,000, the sum of $2,000 (separate excess from X Corporation) and $5,000 (separate excess from Z Corporation). Such aggregate excess is increased by the excess dividends paid deduction, or is reduced by the excess of taxable income, for the first preceding taxable year as follows:

Aggregate excess of dividends paid deduction for second preceding taxable year		$7,000
Dividends paid deduction of Z Corporation for first preceding taxable year	$102,000	
Taxable income of Z Corporation for first preceding taxable year	108,000	(6,000)
Dividend carryover to Z Corporation's taxable year ending December 31, 1958		1,000

Example (3). Assume the facts stated in *Example (2)*, except that Y Corporation transferred all its assets to Z Corporation on May 31, 1957. Assume also that the facts for Y Corporation's taxable year ending May 31, 1957, are otherwise the same as those stated for its taxable year in *Example (2)* ending July 31, 1957. In such case, the dividend carryovers to Z Corporation's taxable years ending on December 31, 1957, and December 31, 1958, are the same as in *Example (2)* notwithstanding the fact that the transfers from X Corporation and Y Corporation occurred on the different dates.

Example (4) —(i) *Facts.* T Corporation acquired on June 30, 1960, all the assets of U Corporation in a statutory merger to which section 381(a) applies, and in a like transaction acquired on June 30, 1961, all the assets of V Corporation. Such corporations all compute taxable income on the basis of the calendar year. T Corporation is a personal holding company for its taxable years 1960 and 1961.

(ii) *Dividend carryover to T Corporation's taxable year 1960.* With respect to T Corporation's taxable year ending December 31, 1960, the taxable years referred to as first preceding taxable years and second preceding taxable years are—

(*a*) U Corporation's taxable years ending June 30, 1960, and December 31, 1959, respectively; and

(*b*) T Corporation's taxable years ending December 31, 1959, and December 31, 1958, respectively.

The dividend carryover to T Corporation's taxable year ending December 31, 1960, is $7,000 computed as follows, assuming the dividends paid deduction before dividend carryovers, and the taxable income after section 545(b) adjustments, to be as stated in the computation:

	U Corporation		T Corporation	
Second preceding taxable year:				
Dividends paid deduction	$16,000		$10,000	
Taxable income	12,000		13,000	
Excess		$4,000		0
First preceding taxable year:				
Dividends paid deduction	7,000		17,000	
Taxable income	5,000		16,000	
Excess		2,000		$1,000
Separate dividend carryovers		6,000		1,000

The aggregate dividend carryover of $7,000 is the sum of $6,000 (the separate dividend carryover from U Corporation) and $1,000 (the separate dividend carryover from T Corporation's own first preceding taxable year).

(iii) *Dividend carryover to T Corporation's taxable year 1961.* Inasmuch as T Corporation's taxable year 1961 is the second taxable year ending after the date of distribution or transfer from U Corporation, paragraph (b)(3)(ii) of this section governs the determination of the dividend carryover from taxable years of T Corporation and U Corporation. On the other hand, inasmuch as T Corporation's taxable year 1961 is the first taxable year ending after the date of distribution or transfer from V Corporation, paragraph (b)(3)(i) governs the determination of the dividend carryover from taxable years of V Corporation.

(*a*) *Application of paragraph (b)(3)(ii) of this section.* With respect to T Corporation's taxable year 1961, the first preceding taxable year is T Corporation's taxable year ending December 31, 1960; and the taxable years referred to as second preceding taxable year are T Corporation's taxable year ending December 31, 1959, and U Corporation's taxable year ending June 30, 1960. The dividend carryover from taxable years of T Corporation and U Corporation is $1,500 computed as follows, assuming the dividends paid deduction before dividend carryovers, and the taxable income after section 545(b) adjustments, to be as stated in the computation:

Second preceding taxable year	U Corporation	T Corporation
Dividends paid deduction	$7,000	$17,000
Taxable income	5,000	16,000
Separate excess of dividends paid deduction over taxable income	2,000	1,000

The aggregate excess of dividends paid deduction over taxable income for the second preceding taxable year is $3,000, the sum of $2,000 (separate excess from U Corporation) and $1,000 (separate excess from T Corporation). Such aggregate is increased by the excess dividends paid deduction, or is reduced by the excess of taxable income, for the first preceding taxable year as follows:

		T Corporation
Aggregate excess of dividends paid deduction for second preceding taxable year		$3,000
First preceding taxable year:		
Dividends paid deduction of T Corporation	$21,000	
Taxable income of T Corporation	22,500	
Excess taxable income		(1,500)
Separate dividend carryover (without regard to V Corporation)		1,500

(*b*) *Application of paragraph (b)(3)(i) of this section.* With respect to T Corporation's taxable year 1961, V Corporation's taxable year ending June 30, 1961, is a first preceding taxable year, and its taxable year ending December 31, 1960, is a second preceding taxable year. The separate dividend carryover from V Corporation is $8,000 computed as follows, assuming the dividends paid deduction before dividend carryovers, and the taxable income after section 545(b) adjustments, to be as stated in the computation:

Second preceding taxable year	V Corporation	
Dividends paid deduction	$11,000	
Taxable income	6,000	
Excess		$5,000
First preceding taxable year:		
Dividends paid deduction	$9,000	
Taxable income	6,000	
Excess	3,000	
Separate dividend carryover from V Corporation		8,000

(*c*) *Dividend carryover.* The dividend carryover to T Corporation's taxable year 1961 is $9,500, the sum of $8,000 (the separate dividend carryover from V Corporation) and $1,500 (the aggregate dividend carryover from T Corporation and U Corporation).

(d) *Successive carryovers.* The provisions of this section shall apply for the purpose of determining a dividend carryover to an acquiring corporation which, in a distribution or transfer to which section 381(a) applies, acquires the assets of a distributor or transferor corporation which has previously acquired the assets of another corporation in a transaction to which section 381(a) applies; even though, in computing the dividend carryover to such second acquiring corporation, it is necessary to take into account the deduction for dividends paid, and the adjusted taxable income, of the first distributor or transferor corporation.

(e) *Acquiring corporation not receiving all the assets.* The dividend carryover acquired from a distributor or transferor corporation by an acquiring corporation in a transaction to which section 381(a) applies is not reduced by reason of the fact that the acquiring corporation does not acquire 100 percent of the assets of the distributor or transferor corporation.

(f) *Dividends paid after the close of taxable year.* A transaction to which section 381(a) applies does not prevent the application of section 563(b) to a dividend paid by a distributor or transferor corporation after the close of its taxable year ending with the date of distribution or transfer but on or before the 15th day of the third month following the close of such taxable year. However, dividends paid by the acquiring corporation may not be taken into account under section 563(b) for the purpose of determining the dividends paid deduction of the distributor or transferor corporation for its taxable

year ending with the date of distribution or transfer.

[T.D. 6532, 26 FR 406, Jan. 19, 1961]

§ 1.381(c)(15)–1 Indebtedness of certain personal holding companies.

(a) *Qualified indebtedness*—(1) *Carryover requirement.* If, in a transaction to which section 381(a) applies, the acquiring corporation assumes liability for any indebtedness which was qualified indebtedness (as defined in section 545(c) and § 1.545–3) in the hands of the distributor or transferor corporation immediately before the assumption of such indebtedness, then, under section 381(c)(15), in computing its undistributed personal holding company income for any taxable year beginning after December 31, 1963, and ending after the date of distribution or transfer, the acquiring corporation shall be considered the distributor or transferor corporation for purposes of computing the deduction under section 545(c) and § 1.545–3. Such deduction shall be allowed to the acquiring corporation in accordance with section 545(c) and § 1.545–3.

(2) *Successive transactions to which section 381(a) applies.* If in a transaction to which section 381(a) applies, an acquiring corporation assumes liability for qualified indebtedness, such acquiring corporation shall be deemed to have incurred such qualified indebtedness for the purpose of applying section 381(c)(15) to any subsequent transaction in which such acquiring corporation is the distributor or transferor corporation.

(b) *Pre-1934 indebtedness*—(1) *Carryover requirement.* If, in a transaction to which section 381(a) applies, the acquiring corporation assumes liability for any indebtedness incurred, or assumed, before January 1, 1934, by a distributor or transferor corporation, then under section 381(c)(15) the acquiring corporation shall be allowed, in computing its undistributed personal holding company income for any taxable year ending after the date of distribution or transfer, a deduction under section 545(b)(7) for amounts used or irrevocably set aside to pay or to retire such indebtedness. Such deduction shall be allowed to the acquiring corporation in accordance with section 545(b)(7) and paragraph (g) of § 1.545–2 as though the indebtedness had been incurred, or assumed, by the acquiring corporation before January 1, 1934.

(2) *Successive transactions to which section 381(a) applies.* If, in a transaction to which section 381(a) applies, an acquiring corporation assumes liability for indebtedness described in subparagraph (1) of this paragraph, such acquiring corporation shall be deemed to have incurred the indebtedness before January 1, 1934, for the purpose of applying section 381(c)(15) to any subsequent transaction in which such acquiring corporation is the distributor or transferor corporation.

(c) *Special rule.* For purposes of this section, if, in a transaction otherwise described in this section, an acquiring corporation acquires real estate—(1) of which the distributor or transferor corporation is the legal or equitable owner immediately before the acquisition, and (2) which is subject to indebtedness that, with respect to the distributor or transferor corporation, is indebtedness described in this section immediately before the acquisition, then the acquiring corporation will be treated as having assumed such indebtedness, provided it shows to the satisfaction of the Commissioner that under all the facts and circumstances it bears the burden of discharging such indebtedness.

[T.D. 6949, 33 FR 5524, Apr. 9, 1968; 33 FR 6091, Apr. 20, 1968]

§ 1.381(c)(16)–1 Obligations of distributor or transferor corporation.

(a) *Deduction allowed to acquiring corporation.* (1) If, in a transaction to which section 381(a) applies, the acquiring corporation assumes an obligation of a distributor or transferor corporation which gives rise to a liability after the date of distribution or transfer and if the distributor or transferor corporation would be entitled to deduct such liability in computing taxable income were it paid or accrued after that date by such corporation, then, under the provisions of section 381(c)(16) and this section, the acquiring corporation shall be entitled to deduct such liability as if it were the distributor or transferor corporation. However, in the case of a transaction to which section 381(a)(2) applies, section 381(c)(16) shall not

apply to an obligation which is reflected in the amount of consideration, that is, the stock, securities, or other property, transferred by the acquiring corporation to a transferor corporation or its shareholders in exchange for the property of that transferor corporation. An obligation which is so reflected in the amount of consideration will be treated as an item or tax attribute not specified in section 381(c)(16). Such an obligation is subject to section 381(c)(4). See subparagraph (2) of this paragraph. Any deduction allowed under section 381(c)(16) to the acquiring corporation shall be taken by that corporation in the taxable year ending after the date of distribution or transfer in which the liability is paid or accrued by that corporation, as the case may be.

(2) In order to determine whether, in the case of obligations of a distributor or transferor corporation assumed by an acquiring corporation, section 381(c)(16) and this section, or section 381(c)(4) and the regulations thereunder, apply, the following rules shall govern:

(i) If the obligation gave rise to a liability before the date of distribution or transfer, see section 381(c)(4) and the regulations thereunder.

(ii) If the obligation gives rise to a liability after the date of distribution or transfer, and the obligation was not reflected in the amount of consideration transferred by the acquiring corporation to the distributor or transferor corporation or its shareholders in exchange for the property of the distributor or transferor corporation, then section 381(c)(16) and this section shall apply.

(iii) In the case of a transaction to which section 381(a)(1) applies, if the obligation gives rise to a liability after the date of a distribution, and the obligation was reflected in the amount of consideration transferred by the acquiring corporation to the distributor corporation or its shareholders in exchange for the property of the distributor corporation, then section 381(c)(16) and this section shall apply.

(iv) In the case of a transaction to which section 381(a)(2) applies, if the obligation gives rise to a liability after the date of a transfer, and the obligation was reflected in the amount of consideration transferred by the acquiring corporation to the transferor corporation or its shareholders in exchange for the property of the transferor corporation, then see section 381(c)(4) and the regulations thereunder.

(3) The rules of this section apply to obligations assumed by agreement of the parties as well as by operation of law.

(4) For purposes of this section, an obligation of a distributor or transferor corporation gives rise to a liability when the liability would be accruable by a taxpayer using the accrual method of accounting notwithstanding the fact that the distributor or transferor corporation is not using the accrual method of accounting. See paragraph (a)(2) of § 1.461–1.

(5) In the case of a transaction to which section 381(a)(2) applies, the determination as to whether or not an obligation was reflected in the amount of consideration transferred by the acquiring corporation to the transferor corporation or its shareholders in exchange for the property of the transferor corporation shall be made on the basis of all the facts of each particular transfer. Where, on the date of distribution or transfer, the parties were aware of the existence of a specific obligation and reduced the amount of consideration to be transferred by the acquiring corporation by a specific amount because of the existence of such obligation, then such obligation shall be considered to have been reflected in the amount of consideration transferred. In the absence of such facts, it shall be presumed that the obligation was not reflected in the amount of consideration transferred.

(b) *Distribution or transfer occurring under the Internal Revenue Code of 1939.* Subject to the provisions of section 381(c)(16) and this section, a corporation which would have been an acquiring corporation (under the provisions of paragraph (b) of § 1.381(a)–1) in a transaction to which section 381(a) applies if the date of distribution or transfer had occurred on or after the effective date of the provisions of subchapter C, chapter 1 of the Internal Revenue Code of 1954, applicable to a

liquidation or reorganization, as the case may be, shall be entitled to take a deduction for amounts paid or accrued in any taxable year beginning after December 31, 1953, in respect of any obligation which it has assumed from a corporation which would have been a distributor or transferor corporation in such transaction. However, this paragraph shall have no application to a situation described in paragraph (a)(2)(iv) of this section.

(c) *Examples.* The application of the foregoing rules may be illustrated by the following examples:

Example (1). X Corporation and Y Corporation compute their taxable income on the basis of the calendar year, and both corporations use an accrual method of accounting. On December 31, 1954, Y Corporation acquires the assets of X Corporation in a transfer to which section 381(a)(2) applies. By reason of State law, Y Corporation assumes responsibility for all of the obligations for which X Corporation is then, or may become, liable. The parties have no knowledge of any specific obligations of X Corporation which are not yet fixed and ascertainable, but it is agreed to reduce the amount of consideration that Y Corporation is to transfer in exchange for the assets of X Corporation by $5,000 to reflect any unforeseen contingent liabilities of X Corporation for which Y Corporation might subsequently become liable. After the date of the transfer, a claim for damages on account of the alleged negligence of an alleged agent of X Corporation is filed. After commencement of legal action by the claimant and in order to eliminate the possibility of injury to its business, Y Corporation settles the claim in 1955 by paying the claimant the amount of $3,000. Assuming that such sum would have been deductible under section 162 if paid by X Corporation, Y Corporation is entitled to deduct such sum in accordance with the provisions of section 381(c)(16) and this section in computing its taxable income for 1955, since the claim gave rise to a liability after the date of transfer, the parties were not aware of a specific obligation, and the specific obligation was not reflected in the consideration transferred by Y Corporation in exchange for the assets of X Corporation.

Example (2). Assume the same facts as in *Example (1),* except that the claim for damages was filed prior to the transfer of X Corporation's assets to Y Corporation, but the parties considered the chances for recovery by the claimant so remote that no specific amount other than the $5,000 reduction in consideration for all contingent liabilities as a whole is reflected in the consideration transferred by Y Corporation in exchange for the assets of X Corporation. Assuming that such sum would have been deductible under section 162 if paid by X Corporation, the $3,000 paid by Y Corporation in 1955 is deductible in accordance with the provisions of section 381(c)(16) and this section in 1955.

Example (3). Assume the same facts as in *Example (1),* except that the parties consider the chances of recovery by the claimant of sufficient probability that Y Corporation reduces the amount of consideration it transfers in exchange for the assets of X Corporation by $1,000 in addition to the $5,000 reduction for all other contingent liabilities. The $3,000 paid by Y Corporation in 1955 is not deductible under section 381(c)(16) and this section, since the specific obligation was reflected in the consideration transferred by Y Corporation in exchange for the assets of X Corporation. The deductibility of the payment is accordingly governed by the provisions of section 381(c)(4) and the regulations thereunder. Similarly, if in this case Y Corporation had transferred $10,000 less in consideration for the assets of X Corporation because of this particular claim, Y Corporation would not be entitled to any deduction for the $3,000 paid in 1955 under section 381(c)(16) and this section, and the deductibility of the payment would be governed by the provisions of section 381(c)(4) and the regulations thereunder. If the date of transfer of X Corporation's assets had occurred prior to the effective date of subchapter C, chapter 1 of the Internal Revenue Code of 1954, applicable to a reorganization, no deduction would be allowed to Y Corporation under that section.

[T.D. 6750, 29 FR 11267, Aug. 5, 1964]

§ 1.381(c)(17)–1 Deficiency dividend of personal holding company.

(a) *Carryover requirement.* If a determination (as defined in section 547(c)) establishes that a distributor or transferor corporation in a transaction to which section 381(a) applies is liable for personal holding company tax imposed by section 541 (or by a corresponding provision of prior income tax law) for any taxable year ending on or before the date of distribution or transfer, then in computing such tax the deduction described in section 547 shall be allowed pursuant to section 381(c)(17) to such corporation for the amount of deficiency dividends paid by the acquiring corporation with respect to the distributor or transferor corporation. Except as otherwise provided in this section, the provisions of section 547 and the regulations thereunder apply with

respect to a deficiency dividend deduction allowable pursuant to section 381(c)(17).

(b) *Deficiency dividends paid by the acquiring corporation with respect to the distributor or transferor corporation.* A deficiency dividend paid by the acquiring corporation with respect to the distributor or transferor corporation is a distribution that would satisfy the definition of a deficiency dividend under section 547(d)(1) if paid by the distributor or transferor corporation to its own shareholders except that it shall be paid by the acquiring corporation to its own shareholders and shall be paid after the date of distribution or transfer and on, or within 90 days after, the date of the determination but before the acquiring corporation files claim under paragraph (c) of this section.

(c) *Claim for deduction.* A claim for a deduction under this section shall be made by the acquiring corporation on Form 976, and shall be filed within 120 days after the date of the determination. The form shall contain, or be accompanied by, the information required under paragraph (b)(2) of § 1.547–2 in sufficient detail to properly identify the facts with the distributor or transferor corporation and the acquiring corporation. The statement required with respect to the shareholders on the date of payment of the deficiency dividend shall relate to the shareholders of the acquiring corporation, and the required certified copy of the resolution authorizing the payment of the dividend shall be that of the board of directors, or other authority, of the acquiring corporation. Necessary changes may be made in Form 976 in order to carry out the provisions of this paragraph. The claim shall be filed with the district director for the internal revenue district in which the return of the distributor or transferor corporation to which such claim relates was filed.

(d) *Effect on dividends paid deduction.* A deficiency dividend paid by the acquiring corporation, which is allowable as a deduction to a distributor or transferor corporation pursuant to section 381(c)(17), shall not become a part of the dividends paid deduction of the acquiring corporation under section 561 for any taxable year.

(e) *Successive transactions to which section 381(a) applies.* The provisions of this section shall apply in the case of successive transactions to which section 381(a) applies. Thus, if X Corporation transfers its assets to Y Corporation in a transaction to which section 381(a) applies and if Y Corporation transfers its assets to Z Corporation in a subsequent transaction to which section 381(a) applies, then, subject to the provisions of this section, X Corporation may take a deficiency dividend deduction for the amount of deficiency dividends paid by Z Corporation with respect to X Corporation.

(f) *Example.* The provisions of this section may be illustrated by the following example:

Example. M Corporation, a personal holding company, computes its taxable income on the basis of the calendar year. On December 31, 1956, N Corporation acquires the assets of M Corporation in a transaction to which section 381(a) applies. On July 31, 1958, a determination (as defined in section 547(c)) establishes that M Corporation is liable for the taxable year 1955 for personal holding company tax in the amount of $35,500 based on undistributed personal holding company income of $42,000 for such taxable year. N Corporation complies with the provisions of this section and on September 30, 1958, distributes $42,000 to its shareholders as deficiency dividends with respect to M Corporation's taxable year 1955. The distribution of $42,000 by N Corporation is a taxable dividend under section 316(b)(2) regardless of whether N Corporation is a personal holding company for the taxable year 1958 or whether it had any current or accumulated earnings and profits. See *Example (3)* in paragraph (e) of § 1.316–1. Because N Corporation has paid deficiency dividends of $42,000 in accordance with this section, M Corporation is entitled to a deficiency dividend deduction of $42,000 for the taxable year 1955 and is thus relieved of its liability for personal holding company tax of $35,500 for such taxable year. To prevent a duplication of deductions, the amount distributed by N Corporation in 1958 does not become a part of N Corporation's dividends paid deduction under section 561 for any taxable year.

[T.D. 6532, 26 FR 409, Jan. 19, 1961, as amended by T.D. 7604, 44 FR 18661, Mar. 29, 1979; T.D. 7767, 45 FR 11264, Feb. 6, 1981]

§ 1.381(c)(18)–1 Depletion on extraction of ores or minerals from the waste or residue of prior mining.

(a) *Carryover requirement.* Section 381(c)(18) provides that the acquiring

corporation in a transaction described in section 381(a) shall be considered as though it were the distributor or transferor corporation after the date of distribution or transfer for the purpose of determining the applicability of section 613(c)(3) (relating to extraction of ores or minerals from the ground). Thus, an acquiring corporation which has acquired the waste or residue of prior mining from a distributor or transferor corporation in a transaction described in section 381(a) shall be entitled, after the date of distribution or transfer, to an allowance for depletion under section 611 in respect of ores or minerals extracted from such waste or residue if the distributor or transferor corporation would have been entitled to such an allowance for depletion in the absence of the distribution or transfer. See paragraph (f) of § 1.613–4 to determine whether a distributor or transferor corporation is entitled to an allowance for depletion with respect to the waste or residue of prior mining.

(b) *Application of section 614 to waste or residue of prior mining.* If, in a transaction described in section 381(a), the acquiring corporation acquires waste or residue of prior mining from a distributor or transferor corporation, then the acquiring corporation shall be considered as though it were the distributor or transferor corporation for the purpose of applying section 614 and the regulations thereunder to the waste or residue so acquired. Thus, if the distributor or transferor corporation was required under paragraph (c) of § 1.614–1 to treat the waste or residue as part of the mineral deposit from which it was extracted and if the acquiring corporation acquires both the waste or residue and the mineral deposit from which it was extracted in a transaction described in section 381(a), then such waste or residue shall be treated as a part of such mineral deposit in the hands of the acquiring corporation. On the other hand, if the waste or residue was required to be treated as a separate mineral deposit in the hands of the distributor or transferor corporation, such waste or residue shall be treated as a separate mineral deposit in the hands of the acquiring corporation.

[T.D. 6552, 26 FR 1991, Mar. 8, 1961, as amended by T.D. 7170, 37 FR 5373, Mar. 15, 1972]

§ 1.381(c)(19)–1 Charitable contribution carryovers in certain acquisitions.

(a) *Carryover requirement.* Section 381(c)(19) provides that, in computing taxable income for its taxable years which begin after the date of distribution or transfer to which section 381(a) applies, the acquiring corporation shall take into account any charitable contributions made by a distributor or transferor corporation during the taxable year ending on the date of distribution or transfer, and in certain immediately preceding taxable years, which are in excess of the maximum amount deductible for those taxable years under section 170(b)(2) in the following manner:

(1) If the taxable year of the distributor or transferor corporation ending on the date of distribution or transfer begins before January 1, 1962, the acquiring corporation shall, in computing taxable income for its first 2 taxable years which begin after the date of such distribution or transfer, take into account the excess contributions made by the distributor or transferor corporation in the taxable year ending on the date of distribution or transfer and in the immediately preceding taxable year;

(2) If the taxable year of the distributor or transferor corporation ending on the date of distribution or transfer begins after December 31, 1961, the acquiring corporation shall, in computing taxable income for certain taxable years which begin after the date of distribution or transfer, take into account the excess contributions made by the distributor or transferor corporation in the taxable year ending on such date of distribution or transfer and in any of the four taxable years immediately preceding such taxable year but excluding any taxable year beginning before January 1, 1962 (see paragraph (c)(3) of this section). Notwithstanding the preceding sentence, if the taxable year of the distributor or transferor corporation ending on the date of distribution or transfer begins after December 31,

1961, and before January 1, 1963, the acquiring corporation shall, in computing taxable income for its first taxable year which begins after the date of distribution or transfer, also take into account the excess contributions made by the distributor or transferor corporation in the taxable year immediately preceding the taxable year of the distributor or transferor corporation ending on the date of distribution or transfer (see paragraph (c)(2) of this section).

To determine the amount of excess contributions made by a distributor or transferor corporation and to integrate them with contributions made by the acquiring corporation for the purpose of determining the charitable contributions deductible by the acquiring corporation for its taxable years beginning immediately after the date of distribution or transfer, it is necessary to apply the provisions of section 170(b)(2) and § 1.170–3 (or, if applicable, section 170(b)(2) and (d)(2) and § 1.170A–11) in accordance with the conditions and limitations of section 381(c)(19) and this section. For taxable years beginning before January 1, 1970, see section 170 for provisions of section 170(b)(2) as referred to in this section. For taxable years beginning after December 31, 1969, see section 170A for provisions of section 170(b)(2) or (d)(2) as referred to in this section. For special rules for applying section 170(d)(2) with respect to contributions paid, or treated as paid, in taxable years beginning before January 1, 1970, see paragraph (d) of § 1.170A–11.

(b) *Manner of computing excess charitable contribution carryovers.* (1) The amount of any charitable contribution made by a distributor or transferor corporation in any taxable year ending on or before the date of distribution or transfer, or made by the acquiring corporation in any taxable year before its taxable year beginning after the date of distribution or transfer, in excess of the amount allowable as a deduction to such corporation for such taxable year under section 170(b)(2) shall be determined by taking into account the taxable income of, and the contributions made by, that corporation only.

(2) An acquiring corporation which, in a distribution or transfer to which section 381(a) applies, acquires the assets of a distributor or transferor corporation which previously acquired the assets of another corporation in a transaction to which section 381(a) applies, shall succeed to and take into account, subject to the conditions and limitations of sections 170 and 381, the charitable contribution carryovers available to the first acquiring corporation under sections 170 and 381, including those derived by such first acquiring corporation from its distributor or transferor corporation.

(3) The excess charitable contributions made by a distributor or transferor corporation in its taxable year ending on the date of distribution or transfer and in certain immediately preceding taxable years (see paragraph (c) of this section) which are not deductible by the distributor or transferor corporation because of the 5-percent limitation of section 170(b)(2) shall be available to the acquiring corporation without diminution by reason of the fact that the acquiring corporation does not acquire 100 percent of the assets of the distributor or transferor corporation. Thus, if a parent corporation owning 80 percent of all classes of stock of its subsidiary corporation were to acquire its share of the assets of the subsidiary corporation upon a complete liquidation described in paragraph (b)(1)(i) of § 1.381(a)–1, then, subject to the conditions and limitations of this section, 100 percent of the excess contributions made by the subsidiary corporation would be available to the acquiring corporation.

(c) *Taxable years to which carryovers apply and amount deductible*—(1) *Taxable years beginning before January 1, 1962.* If the taxable year of the distributor or transferor corporation ending on the date of distribution or transfer begins before January 1, 1962:

(i) The excess charitable contributions made by a distributor or transferor corporation in its taxable year immediately preceding that ending on the date of distribution or transfer, to the extent not deductible by it because of the limitations of section 170(b)(2) in its taxable year ending on that date, shall be deductible by the acquiring corporation to the extent prescribed by section 170(b)(2) in its first taxable year

beginning after the date of distribution or transfer. Any portion of such excess which is not deductible under this section by the acquiring corporation in such first taxable year shall not be deducted by that corporation in any other taxable year.

(ii) The excess charitable contributions made by a distributor or transferor corporation in its taxable year ending on the date of distribution or transfer shall first be deductible by the acquiring corporation to the extent prescribed by section 170(b)(2) and this section in its first taxable year beginning after that date and then, to the extent prescribed by section 170(b)(2) and this section, in its second taxable year beginning after that date. Any portion of such excess which is not deductible under this section by the acquiring corporation in such first and second taxable years shall not be deducted by that corporation in any other taxable year.

(2) *Taxable years beginning in 1962.* If the taxable year of the distributor or transferor corporation ending on the date of distribution or transfer begins after December 31, 1961, and before January 1, 1963:

(i) The excess charitable contributions made by a distributor or transferor corporation in its taxable year immediately preceding that ending on the date of distribution or transfer, to the extent not deductible by it because of the limitations of section 170(b)(2) in its taxable year ending on that date, shall be deductible by the acquiring corporation to the extent prescribed by section 170(b)(2) in its first taxable year beginning after the date of distribution or transfer. Any portion of such excess which is not deductible under this section by the acquiring corporation in such first year shall not be deducted by that corporation in any other taxable year.

(ii) The excess charitable contributions made by a distributor or transferor corporation in its taxable year ending on the date of distribution or transfer and beginning after December 31, 1961, and before January 1, 1963, shall first be deductible by the acquiring corporation to the extent prescribed by section 170(b)(2) and this section in its first taxable year beginning after that date and then, to the extent prescribed by section 170(b)(2) and this section, in its second, third, fourth, and fifth taxable year, in order of time, beginning after that date. Any portion of such excess which is not deductible under this section by the acquiring corporation in such 5 taxable years shall not be deducted by that corporation in any other taxable year.

(3) *Taxable years beginning after December 31, 1962.* (i) If the taxable year of the distributor or transferor corporation ending on the date of distribution or transfer begins after December 31, 1962, the excess charitable contributions made by a distributor or transferor corporation in its taxable year ending on the date of distribution or transfer and in each of its four immediately preceding taxable years (excluding any taxable year beginning before January 1, 1962), to the extent not deductible by it because of the limitations of section 170(b)(2) in its taxable year ending on the date of distribution or transfer or its prior taxable years, shall be deductible by the acquiring corporation to the extent prescribed by section 170(b)(2) (or, if applicable, section 170(d)(2)) and subdivision (ii) of this subparagraph, in its taxable years which begin after the date of distribution or transfer. However, any portion of the excess charitable contributions made by a distributor or transferor corporation in a particular taxable year, to which this subparagraph is applicable, which is not deductible under this section within the 5 taxable years immediately following the taxable year in which the contribution was paid by the distributor or transferor corporation shall not be deductible by the acquiring corporation in any other taxable year.

(ii) For purposes of determining the 5 taxable years in which the excess contributions may be deducted, all taxable years of the distributor or transferor corporation subsequent to the taxable year in which the excess contribution was made, including the taxable year ending on the date of distribution or transfer shall be treated as taxable years of the acquiring corporation.

(iii) The provisions of this subparagraph may be illustrated by the following example:

Example. X Corporation and Y Corporation both compute taxable income on the calendar year basis. X Corporation has excess charitable contributions for 1962 and 1964. On December 31, 1966, X Corporation distributes all its assets to Y Corporation in a complete liquidation to which section 381(a) applies. The excess 1962 charitable contributions of X Corporation (to the extent not deductible by X because of the limitations of section 170(b)(2) in its taxable years 1963 through 1966) may be deducted by Y Corporation only in 1967. Y Corporation's taxable year 1967 is the fifth taxable year succeeding the taxable year 1962 (the year in which the excess contributions were made), and the portion of such excess contributions which is not deductible in the 5 taxable years immediately succeeding 1962 (1963 through 1967) is not deductible by Y Corporation in any other taxable year. Any excess charitable contributions for 1964 to which Y Corporation may be entitled must be deducted by Y Corporation (if deductible at all) in 1967, 1968, and 1969 since such years are the third, fourth, and fifth taxable years succeeding the taxable year 1964 (the year in which the excess contributions were paid).

(4) *General rules.* No excess charitable contributions made by a distributor or transferor corporation shall be deductible by the acquiring corporation in its taxable year which includes the date of distribution or transfer. In addition, an excess charitable contribution made by a distributor or transferor corporation in a taxable year prior to the taxable year of the transfer is only deductible by the distributor or transferor corporation, subject to the limitations of section 170(b)(2) (or, if applicable, section 170(d)(2)), in its subsequent taxable years which begin on or before the date of distribution or transfer, and by the acquiring corporation in its taxable year or years beginning after the date of distribution or transfer.

(d) *Rules governing amounts deductible by acquiring corporations.* (1) In applying the provisions of section 170(b)(2) (or, if applicable, section 170(d)(2)) for the purpose of determining the amount of excess charitable contributions which are deductible by the acquiring corporation in its taxable years beginning after the date of distribution or transfer, all taxable years of the distributor or tranferor and acquiring corporations which, with respect to a particular taxable year beginning after the date of distribution or transfer, constitute the same numbered preceding taxable year shall together be considered as a 1 taxable year even though the taxable years involved may not end on the same date. Thus, for example, all taxable years of the distributor or transferor and acquiring corporations which, with respect to the first taxable year of the acquiring corporation beginning after the date of distribution or transfer, constitutes the second preceding taxable year shall together be considered as 1 taxable year even though the taxable years involved may not end on the same date. Any excess charitable contributions carried over from preceding taxable years which are considered as 1 taxable year shall be taken into account by the acquiring corporation as one amount, without regard to the extent to which the contributions were made by a distributor or transferor corporation or the acquiring corporation.

(2) For purposes of this paragraph, each taxable year of the distributor or transferor corporation beginning on or before the date of distribution or transfer shall be treated as a preceding taxable year with reference to the acquiring corporation's taxable years beginning after such date. For example, the taxable year of a distributor or transferor corporation which ends on the date of distribution or transfer shall be considered a first preceding taxable year with reference to the acquiring corporation's first taxable year beginning after that date, a second preceding taxable year with reference to the acquiring corporation's second taxable year beginning after that date, and so forth with respect to succeeding taxable years of the acquiring corporation. Also, for example, the taxable year of a distributor or transferor corporation which immediately precedes its taxable year ending on the date of distribution or transfer shall be considered a second preceding taxable year with reference to the acquiring corporation's first taxable year beginning after that date.

(e) *Illustration.* The application of this section may be illustrated by the following example:

Example. (i) X Corporation is organized on April 1, 1956, and computes its taxable income on the basis of the fiscal year ending March 31. Y Corporation is organized on July 1, 1955, and computes its taxable income on

the basis of the fiscal year ending June 30. Z Corporation is organized on January 1, 1956, and computes its taxable income on the basis of the calendar year. On June 30, 1957, X Corporation distributes all its assets to Y Corporation in a complete liquidation to which section 381(a) applies. On November 30, 1957, Y Corporation transfers all its assets to Z Corporation in a statutory merger to which section 381(a) applies.

(ii) The 5-percent limitation (computed in the manner prescribed by section 170(b)(2)), the charitable contributions actually paid, and the excess contributions with respect to each such corporation during the taxable years involved are as follows:

Name of corporation	*X*	*X*	
Taxable year ending	*3–31–57*	*6–30–57*	
5-percent limitation	$20,000	$9,000	
Current contributions	32,000	15,000	
(Excess contributions)	(12,000)	(6,000)	
Name of corporation	*Y*	*Y*	*Y*
Taxable year ending	*6–30–56*	*6–30–57*	*11–30–57*
5-percent limitation	$15,000	$10,000	$18,000
Current contributions	29,000	0	17,000
(Excess contributions)	(14,000)	.....	.....
Balance of 5-percent limitation	.....	10,000	1,000
Name of corporation	*Z*	*Z*	*Z*
Taxable year ending	*12–31–56*	*12–31–57*	*12–31–58*
5-percent limitation	$10,000	$30,000	$58,000
Current contributions	40,000	28,000	92,000
(Excess contributions)	(30,000)	.....	.....
Balance of 5-percent limitation	.....	2,000	56,000

(iii) X Corporation was in existence for two taxable years, in each of which it made charitable contributions in excess of the maximum amount deductible for those years under section 170(b)(2). The excess contributions made in the year ending March 31, 1957, of $12,000, are deductible by X Corporation in its short taxable year ending June 30, 1957, and then by Y Corporation in its short taxable year ending November 30, 1957, in each instance in the manner and to the extent prescribed by section 170(b)(2) and this section. The excess contributions made by X Corporation in the year ending June 30, 1957, of $6,000, are deductible by Y Corporation in its short taxable year ending November 30, 1957, and then by Z Corporation in its taxable year 1958, in each instance in the manner and to the extent prescribed by section 170(b)(2) and this section.

(iv) Y Corporation was in existence for three taxable years. In the year ended June 30, 1956, its contributions in excess of the amount deductible for that year under section 170(b)(2) amounted to $14,000. Such excess is deductible by Y Corporation in its taxable year ending June 30, 1957, and, together with X Corporation's excess contributions of $18,000, in its short taxable year ending November 30, 1957, in each instance in the manner and to the extent prescribed by section 170(b)(2) and this section. Accordingly, since Y Corporation made no contributions in its taxable year ending June 30, 1957, its deduction for that year on account of excess contributions carried over is $10,000, an amount equal to the 5-percent limitation of section 170(b)(2). The deduction is attributable to excess contributions made by Y Corporation in the taxable year ended June 30, 1956; thus, the excess of those contributions over $10,000, namely, $4,000, is deductible by Y Corporation in its short taxable year ending November 30, 1957, in the manner and to the extent prescribed by section 170(b)(2) and this section. With respect to the short taxable year ending November 30, 1957, the excess contributions of the second preceding year are X Corporation's excess contributions of $12,000 made in the year ending March 31, 1957, and Y Corporation's excess contributions of $4,000 made in the year ending June 30, 1956, which were not deductible by Y Corporation in the taxable year ending June 30, 1957, because of the 5-percent limitation prescribed by section 170(b)(2), an aggregate of $16,000. Inasmuch as Y Corporation's limitation for the short taxable year ended November 30, 1957, exceeds the contributions made in that year by $1,000, the excess contributions of the second preceding taxable year are deductible in the taxable year ending November 30, 1957, to the extent of $1,000 and the remainder ($15,000) is not deductible by any corporation in any taxable year. The excess contributions of the first preceding taxable year, namely, X Corporation's excess contributions made in the short taxable year ending June 30, 1957, are deductible by Z Corporation in its taxable year 1958, in the manner and to the extent prescribed in section 170(b)(2) and this section.

(v) Z Corporation has been in existence for 3 taxable years. The contributions made in 1956 in excess of the amount deductible for that year under section 170(b)(2) amounted to $30,000. Such excess is deductible by Z Corporation in its taxable year 1957 and, together with X Corporation's excess contributions of $6,000 (derived through Y Corporation) made in the taxable year ending June 30, 1957, in the taxable year 1958, in each instance in the manner and to the extent prescribed by section 170(b)(2) and this section. Thus, $2,000 of the $30,000 excess contributions made in the year 1956 are deducted in 1957 and the remainder ($28,000), together with X Corporation's excess contributions of $6,000 made in the short taxable year ending June 30, 1957, are deducted in 1958 since the

aggregate of such amounts plus the contributions actually made in that year does not exceed the 5-percent limitation prescribed by section 170(b)(2).

[T.D. 6552, 26 FR 1992, Mar. 8, 1961, as amended by T.D. 6900, 31 FR 14642, Nov. 17, 1966; T.D. 7207, 37 FR 20795, Oct. 5, 1972]

§ 1.381(c)(21)–1 Pre-1954 adjustments resulting from change in method of accounting.

(a) *Carryover requirement.* Section 381(c)(21) provides that, in a transaction to which section 381(a) applies, an acquiring corporation shall take into account the net amount of any adjustments described in section 481(b)(4) (relating to adjustments arising from changes in accounting methods initiated by the taxpayer attributable to pre-1954 Code years) of the distributor or transferor corporation to the extent that such net amount of such adjustments has not been taken into account in any taxable year, including a short taxable year, by the distributor or transferor corporation. The acquiring corporation shall take into account in each taxable year beginning with the taxable year ending after the date of distribution or transfer the net amount of such adjustments in the same manner and at the same time as such net amount would have been taken into account by the distributor or transferor corporation. Thus, the amount of any such adjustment which the acquiring corporation shall take into account in each taxable year shall be the same amount that would have been taken into account in each taxable year by the distributor or transferor corporation.

(b) This section may be illustrated by the following example:

Example. On January 1, 1960, X Corporation, a calendar year taxpayer, voluntarily changed its method of accounting giving rise to a $50,000 adjustment under section 481(a), of which $20,000 is attributable to pre-1954 Code years. Under section 481(b)(4) the $20,000 adjustment is to be spread over 1960 and the following 9 years at the rate of $2,000 each year. On November 1, 1963, all the assets of X Corporation are acquired by Y Corporation in a transaction to which section 381(a) applies. Y Corporation reports its income on a fiscal year ending June 30. X and Y Corporations must take into account the $20,000 adjustment at the rate of $2,000 in each taxable year in the following time and manner:

X Corporation		
Calendar years 1960–62 ($2,000×3)	$6,000	
Short taxable year ending Nov. 1, 1963 ($2,000×1)	2,000	$8,000
Y Corporation		
Fiscal years ending:		
June 30, 1964 ($2,000×1)	2,000	
June 30, 1965–69 ($2,000×5)	10,000	12,000
		20,000

(c) *Successive transactions to which section 381(a) applies.* The provisions of this section shall apply in the case of successive transactions to which section 381(a) applies. Thus, if R Corporation, which was taking into account adjustments described in section 481(b)(4), distributes or transfers its assets to S Corporation in a transaction to which section 381(a) applies, and S Corporation was required to take into account any remaining portion of such adjustments under section 381(c)(21) and this section, and if subsequently S Corporation distributes or transfers its assets to T Corporation in a transaction to which section 381(a) applies, then T Corporation, under section 381(c)(21) and this section, shall take into account any remaining portion of such adjustments not previously taken into account by R and S Corporations.

(d) *Acquiring corporation not receiving all the assets.* The adjustments described in this section acquired from a distributor or transferor corporation by an acquiring corporation in a transaction to which section 381(a) applies is not reduced by reason of the fact that the acquiring corporation does not acquire 100 percent of the assets of the distributor or transferor corporation.

[T.D. 6553, 26 FR 2171, Mar. 15, 1961]

§ 1.381(c)(22)–1 Successor life insurance company.

(a) *Carryover requirement.* If in a taxable year beginning after December 31, 1957, a distributor or transferor corporation which is a life insurance company (as defined in section 801(a)) is acquired by a corporation which is a life insurance company (as defined in section 801(a)), in a transaction to which section 381(a) applies, section 381(c)(22) provides that the acquiring corporation shall take into account the appropriate items which the distributor or transferor corporation was required to take

into account for purposes of part I, subchapter L, chapter 1 of the Code. Furthermore, except as otherwise provided by this section, the acquiring corporation shall take into account the items described in paragraphs (2) through (21), other than paragraphs (14), (15), and (17), of section 381(c) and the regulations thereunder. For example, the acquiring corporation shall take into account the reserves described in section 810(c) distributed or transferred to it as of the close of the date of distribution or transfer by the distributor or transferor corporation in accordance with the provisions of section 381(c)(4) and the regulations thereunder. For provisions defining the date of distribution or transfer, see paragraph (b) of § 1.381(b)–1.

(b) *Items required to be taken into account by acquiring corporation.* If a transaction meets the requirements of paragraph (a) of this section, the acquiring corporation shall, except as otherwise provided, take into account as of the close of the date of distribution or transfer the following items of the distributor or transferor corporation:

(1) The operations loss carryovers (as determined under section 812), subject to conditions and limitations consistent with the conditions and limitations prescribed in section 381(c)(1) and the regulations thereunder. For example, a loss from operations for a loss year of a distributor or transferor corporation which ends on or before the last day of a loss year of the acquiring corporation shall be considered to be a loss from operations for a year prior to such loss year of the acquiring corporation. All references in section 381(c)(1) and the regulations thereunder to section 172 shall be construed as referring to the appropriate corresponding provisions of section 812. Thus, a reference to section 172(b) shall be construed as referring to section 812 (b) and (d). In determining the span of years for which a loss from operations may be carried, the number of taxable years for which the distributor or transferor corporation was authorized to do business as an insurance company shall be taken into account. For purposes of this determination, the taxable year of the distributor or transferor corporation which ends on the date of distribution or transfer shall be taken into account even though such taxable year is a period of less than 12 months.

(2)(i) The investment yield and the beginning of the year asset balance for the distributor or transferor corporation's taxable year ending with the close of the date of distribution or transfer. Such items shall be integrated with the investment yield and beginning of the year asset balance of the acquiring corporation for its first taxable year ending after such date of distribution or transfer for purposes of determining the current earnings rate of the acquiring corporation for such taxable year. Furthermore, for purposes of determining the average earnings rate of the acquiring corporation, the investment yield and mean of the assets of the distributor or transferor corporation for its 4 taxable years immediately preceding its taxable year which closes with the date of distribution or transfer shall be integrated with the investment yield and mean of the assets of the acquiring corporation for such corresponding taxable years.

(ii) The provisions of this subparagraph may be illustrated by the following examples:

Example (1). X qualified as a life insurance company in 1949. Y qualified as a life insurance company in 1951. On June 30, 1961, at which time both X and Y were life insurance companies (as defined in section 801(a)), X transferred all its assets to Y in a statutory merger to which section 361 applies. For its taxable year ending on June 30, 1961, X had investment yield of $15 and assets at the beginning of such taxable year of $450. For purposes of determining its current earnings rate for its taxable year ending on December 31, 1961, Y had investment yield of $45 (including the $15 of investment yield of X), assets at the beginning of such taxable year of $1,250 (including the $450 of X's assets at the beginning of its taxable year 1961), and assets at the end of such taxable year of $1,750 (after the application of section 806(a)). Under the provisions of subdivision (i) of this subparagraph, the current earnings rate of Y for the taxable year 1961 would be 3 percent, determined by dividing the investment yield of Y, $45, by the mean of the assets of Y, $1,500 ($1,250+$1,750÷2). In order to determine its average earnings rate and adjusted reserves rate for the taxable year 1961, Y would make up the following schedule:

Investment yield				Mean of assets			Current earnings rate of Y
Taxable year	Column 1—X	Column 2—Y	Column 3 (Col. 1 + Col. 2) integrated investment yield	Column 4—X	Column 5—Y	Column 6 (Col. 4 + Col. 5) integrated means of assets	Column 7 (Col. 3 ÷ Col. 6)
1960	$16	$26	$42	$400	$800	$1,200	3.5
1959	16	24	40	500	750	1,250	3.2
1958	17	22	39	650	650	1,300	3.0
1957	19	21	40	700	500	1,200	3.3

For the taxable year 1961, Y would have an average earnings rate of 3.2 percent, computed by taking into account the current earnings rates for the taxable year 1961 and each of the 4 taxable years immediately preceding such taxable year. The adjusted reserves rate for such taxable year would be 3 percent since the current earnings rate of 3 percent for 1961 is lower than the average earnings rate of 3.2 percent.

Example (2). The facts are the same as in *Example (1),* except that the taxable year in issue is 1962, and the current earnings rate of Y for such taxable year was 3.8 percent. For the taxable year 1962, Y would have an average earnings rate of 3.3 percent, computed by taking into account only the current earnings rates for the taxable year 1962 and each of the 4 taxable years immediately preceding such taxable year. The adjusted reserves rate for such taxable year would be 3.3 percent since the average earnings rate of 3.3 percent is lower than the 1962 current earnings rate of 3.8 percent.

(3) To the extent there are any amounts accrued for discounts in the nature of interest which have not been included as interest paid under section 805(e)(3), the acquiring corporation shall be treated as the distributor or transferor corporation for purposes of including such amounts as interest paid.

(4) Any adjustment required by section 806(b) with respect to an item described in section 810(c) shall be made by the acquiring corporation in its first taxable year which begins after the date of distribution or transfer.

(5) The amount of the deduction provided by section 809(d)(6), as limited by section 809(f), for all taxable years of the distributor or transferor corporation which end on and before the date of distribution or transfer (irrespective of whether or not the distributor or transferor corporation claimed this deduction for such taxable years) for the purpose of determining the limitation under section 809(d)(6).

(6)(i) To the extent there are any remaining net increases or net decreases in reserves required to be taken into account by the distributor or transferor corporation under section 810(d)(1), the acquiring corporation shall be treated as the distributor or transferor corporation as of its first taxable year which begins after the date of distribution or transfer.

(ii) The provisions of this subparagraph may be illustrated by the following example:

Example. Assume that the amount of an item described in section 810(c) of X, a life insurance company, at the beginning of the taxable year 1959 is $100. Assume that at the end of the taxable year 1959, as a result of a change in the basis used in computing such item during the taxable year, the amount of the item (computed on the new basis) is $200 but computed on the old basis would have been $150. Since the amount of the item at the end of the taxable year computed on the new basis, $200, exceeds the amount of the item at the end of the taxable year computed on the old basis, $150, by $50, section 810(d)(1) provides that one-tenth of the amount of such excess, or $5, shall be taken into account by X as a net increase referred to in section 809(d)(2) and paragraph (a)(2) of § 1.809–5 in determining gain or loss from operations for each of the 10 taxable years immediately following the taxable year 1959. Assume further that on June 30, 1961, X transferred all its assets to Y, a life insurance company, in a statutory merger to which section 361 applies. Under the provisions of section 810(d)(1), X would include $5 as a net increase under section 809(d)(2) and paragraph (a)(2) of § 1.809–5 in determining gain or loss from operations for its taxable years 1960 and 1961. Thus, the remaining net increase to be taken into account by X under section 810(d)(1) is $40 (eight-tenths of $50). Accordingly, Y shall take into account $5 as a net increase referred to in section 809(d)(2) and paragraph (a)(2) of § 1.809–5 in determining gain or loss from operations for each of

its 8 taxable years beginning in 1962 ($5×8=$40).

(7)(i) The dollar balances in the shareholders surplus account, policyholders surplus account, and other accounts provided, however, that the acquiring corporation is a stock life insurance company. The dollar balance in the policyholders surplus account shall reflect the amount (if any) treated as a subtraction from such account by reason of the application of the limitation provided under section 815(d)(4) immediately prior to the close of the date of distribution or transfer. To the extent that any amount must be added to the shareholders surplus account as a result of the application of the limitation provided under section 815(d)(4), the acquiring corporation shall be treated as the distributor or transferor corporation as of its first taxable year which begins after the date of distribution or transfer.

(ii) If the acquiring corporation is a mutual life insurance company, the dollar balances in the shareholders surplus account, policyholders surplus account, and other accounts shall not be taken into account by such acquiring corporation and the distributor or transferor corporation shall be subject to the provisions of section 815(d)(2)(A) as of the close of the date of distribution or transfer.

(8) To the extent that any amount must be added to the shareholders surplus account as a result of an election made under section 815(d)(1) by the distributor or transferor corporation, the acquiring corporation shall be treated as the distributor or transferor corporation as of its first taxable year which begins after the date of distribution or transfer.

(9) The amount of the life insurance reserves at the end of 1958, but only for the purpose of applying the limitation provided under section 815(d)(4)(B).

(10) To the extent there are amounts subject to the provisions of section 817(d), the acquiring corporation shall be treated as the distributor or transferor corporation.

(11) To the extent there are any installments of tax imposed by section 818(e)(3)(A) remaining to be paid, the acquiring corporation shall be treated as the distributor or transferor corporation for the purpose of paying such installments.

(12) The capital loss carryovers, subject to conditions and limitations consistent with the conditions and limitations prescribed in section 381(c)(3) and the regulations thereunder, except that any net capital loss of the distributor or transferor corporation for a taxable year beginning before January 1, 1959, shall not be taken into account. See section 817(c).

[T.D. 6625, 27 FR 12541, Dec. 19, 1962]

§ 1.381(c)(23)–1 Investment credit carryovers in certain corporate acquisitions.

(a) *Carryover requirement.* (1) Section 381(c)(23) requires the acquiring corporation in a transaction to which section 381 applies to succeed to and take into account under such regulations as may be prescribed by the Secretary or his delegate, the investment credit carryovers of the distributor or transferor corporation. To determine the amount of these carryovers as of the close of the date of distribution or transfer, and to integrate them with any carryovers and carrybacks of the acquiring corporation for purposes of determining the amount of credit allowed by section 38 to the acquiring corporation for taxable years ending after the date of distribution or transfer, it is necessary to apply the provisions of sections 46, 47, and 48 in accordance with the conditions and limitations of this section.

(2) The investment credit carryovers and carrybacks of the acquiring corporation determined as of the close of the date of distribution or transfer shall be computed without reference to any unused credit of a distributor or transferor corporation. The investment credit carryovers of a distributor or transferor corporation as of the close of the date of distribution or transfer shall be determined without reference to any unused credit of the acquiring corporation.

(b) *Carryback of unused credits.* An unused credit of the acquiring corporation for any taxable year ending after the date of distribution or transfer shall not be carried back in computing the credit allowed by section 38 to a distributor or transferor corporation.

However, an unused credit of the acquiring corporation for any such taxable year shall be carried back in accordance with section 46(b)(1) in computing the credit allowed to the acquiring corporation for a taxable year ending on or before the date of distribution or transfer. If a distributor or transferor corporation remains in existence after the date of distribution or transfer, an unused credit sustained by it for any taxable year beginning after such date shall be carried back in accordance with section 46(b)(1) in computing the credit allowed by section 38 to such corporation for a taxable year ending on or before that date, but may not be carried back or over in computing the credit allowed by section 38 to the acquiring corporation.

(c) *Computation of carryovers and carrybacks.* (1) Subject to the modifications set forth in this paragraph, the provisions of § 1.46–2 shall apply in computing carryovers and carrybacks of unused credits to taxable years of the acquiring corporation.

(2)(i) The investment credit carryovers available to the distributor or transferor corporation as of the close of the date of distribution or transfer shall first be carried to the first taxable year of the acquiring corporation ending after that date. This rule applies whether the date of distribution or transfer is on the last day, or any other day, of the acquiring corporation's taxable year.

(ii) The investment credit carryovers available to the distributor or transferor corporation as of the close of the date of distribution or transfer shall be carried to the acquiring corporation without diminution by reason of the fact that the acquiring corporation does not acquire 100 percent of the assets of the distributor or transferor corporation.

(3) An unused credit of a distributor or transferor corporation for a taxable year which ends on or before the last day of a taxable year of the acquiring corporation shall be considered to be an unused credit for a year prior to such taxable year of the acquiring corporation. If the acquiring corporation has acquired the assets of two or more distributor or transferor corporations on the same date of distribution or transfer, the unused credit years of the distributor or transferor corporations shall be taken into account in the order in which such years terminate. If any one of the unused credit years of a distributor or transferor corporation ends on the same day as the unused credit year of another distributor or transferor corporation, either unused credit year may be taken into account before the other.

(4) The extent to which an investment credit carryover of a distributor or transferor corporation or of an acquiring corporation from an unused credit year ending before January 1, 1971, may be taken into account by the acquiring corporation for a taxable year beginning after December 31, 1970, shall be determined without regard to the credit earned by the acquiring corporation for such year. Thus, in such a case, the amount of unused credit from such unused credit years which may be taken into account in a taxable year of the acquiring corporation beginning after December 31, 1970, shall be determined solely with reference to the limitation based on amount of tax for such taxable year (without reduction for the credit earned for such year).

(d) *Computation of carryovers when date of distribution or transfer occurs on last day of acquiring corporation's taxable year.* The computation of the investment credit carryovers from the distributor or transferor corporation and from the acquiring corporation in a case where the date of distribution or transfer occurs on the last day of a taxable year of the acquiring corporation may be illustrated by the following example:

Example. X Corporation and Y Corporation were organized on January 1, 1971, and each corporation files its return on the calendar year basis. On December 31, 1972, X transfers all its assets to Y in a statutory merger to which section 361 applies. X's credit earned and its limitation based on amount of tax for its taxable years 1971 and 1972 are as follows:

X Corporation's taxable year	Credit earned	Limitation based on amount of tax
1971	$10,000	$5,000
1972	5,000	3,000

Y's credit earned and its limitation based on amount of tax for its taxable years 1971 through 1973 are as follows:

Y Corporation's	Credit earned	Limitation based on amount of tax
1971	$6,000	$5,000
1972	5,000	3,000
1973	3,000	10,000

The sequence for the allowance of unused credits of X Corporation and Y Corporation, and the computation of the carryovers to Y Corporation's calendar year 1974, may be illustrated as follows:

(1) *X Corporation's 1971 unused credit.*— The carryover to Y 1974 is $0, computed as follows:

Unused credit	$5,000
Excess of X's 1972 limitation based on tax over credit earned	0
Carryover to Y's year 1973	5,000
Excess of Y's 1973 limitation based on tax over credit earned	7,000
Carryover to Y's year 1974	0

(2) *Y Corporation's 1971 unused credit.*— The carryover to Y 1974 is $0, computed as follows:

Unused credit	$1,000
Excess of Y's 1972 limitation based on tax over credit earned	0
Carryover to Y's year 1973	1,000
Excess of Y's 1973 limitation based on tax over credit earned	7,000
Less: X's $5,000 carryover from 1971	5,000
	2,000
Carryover to Y's year 1974	0

(3) *X Corporation's 1972 unused credit.*— The carryover to Y 1974 is $1,000, computed as follows:

Unused credit	$2,000
Excess of Y's 1973 limitation based on tax over credit earned	7,000
Less: X's $5,000 carryover from 1971 and Y's $1,000 carryover from 1971	6,000
	1,000
Carryover to Y's year 1974	1,000

(4) *Y Corporation's 1972 unused credit.*— The carryover to Y 1974 is $2,000, computed as follows:

Unused credit	$2,000
Excess of Y's 1973 limitation based on tax over credit earned	7,000
Less: X's $5,000 carryover from 1971 Y's $1,000 carryover from 1971 and X's $1,000 carryover from 1972	7,000
	0
Carryover to Y's year 1974	2,000

(5) The aggregate of the investment credit carryovers to Y's year 1974 is $3,000, computed as follows:

X's 1972 unused credit	$1,000
Y's 1972 unused credit	2,000
Total	3,000

(e) *Computation of carryovers when date of distribution or transfer is not on last day of acquiring corporation's taxable year.* (1) If the date of distribution or transfer occurs on any day other than the last day of a taxable year of the acquiring corporation, the amount which may be added to the amount allowable as a credit by section 38 for the first taxable year of the acquiring corporation ending after the date of distribution or transfer (hereinafter called the ''year of acquisition'') shall be determined in the following manner. The year of acquisition shall be considered as though it were 2 taxable years. The first of such 2 taxable years shall be referred to in this paragraph as the preacquisition part year and shall begin with the beginning of the year of acquisition and end with the close of the date of distribution or transfer. The second of such 2 taxable years shall be referred to in this paragraph as the postacquisition part year and shall begin with the day following the date of distribution or transfer and shall end with the close of the year of acquisition.

(2) The excess limitation for the year of acquisition (i.e., the excess of the limitation based on the amount of tax for such year over the amount of credit earned for such year) shall be divided between the preacquisition part year and the postacquisition part year in proportion to the number of days in each. Thus, if in a statutory merger to which section 361 applies Y Corporation, a calendar year taxpayer, acquires the assets of X Corporation on June 30, 1975, and Y Corporation has an excess limitation of $36,500 for its calendar year 1975, then the excess limitation for the preacquisition part year would be $18,100 ($36,500×181/365) and the excess limitation for the postacquisition part year would be $18,400 ($36,500×184/365).

(3) An unused credit of the acquiring corporation shall be carried to and applied against the excess limitation for

the preacquisition part year and then carried to and applied against the excess limitation for the postacquisition part year, whereas an unused credit of the distributor or transferor corporation shall not be carried to the preacquisition part year but shall only be carried to and applied against the excess limitation for the postacquisition part year. For special rule relating to carryovers from taxable years ending before January 1, 1971, to taxable years beginning after December 31, 1970, see subparagraph (6) of this paragraph.

(4) Though considered as two separate taxable years for purposes of this paragraph, the preacquisition part year and the postacquisition part year are treated as one taxable year in determining the years to which an unused credit is carried under section 46(b)(1).

(5) The preceding subparagraphs may be illustrated by the following example:

Example. X Corporation and Y Corporation were organized on January 1, 1971, and each corporation files its return on the calendar year basis. On May 1, 1972, X transfers all its assets to Y in a statutory merger to which section 361 applies. X's credit earned and its limitation based on amount of tax for its taxable years 1971 and ending May 1, 1972, are as follows:

X Corporation's taxable year	Credit earned	Limitation based on amount of tax
1971	$11,000	$5,000
Ending 5–1–72	3,000	6,000

Y's credit earned and its limitation based on amount of tax for its taxable years 1971 and 1972 are as follows:

Y Corporation's taxable year	Credit earned	Limitation based on amount of tax
1971	$7,000	$3,000
1972	3,000	9,000

The sequence for the allowance of unused credits of X Corporation and Y Corporation, and the computation of carryovers to Y Corporation's calendar year 1973, may be illustrated as follows:

(i) *X Corporation's 1971 unused credit.* The carryover to Y 1973 is $0, computed as follows:

Unused credit	$6,000
Excess of X's 5–1–72 limitation based on tax over credit earned	3,000
Carryover to Y's postacquisition part year 1972	3,000
Excess limitation for Y's postacquisition part year ($6,000× 244/366)	4,000
Carryover to Y's year 1973	0

(ii) *Y Corporation's 1971 unused credit.* The carryover to Y 1973 is $1,000, computed as follows:

Unused credit	$4,000
Excess limitation for Y's preacquisition part year ($6,000×122/ 366)	2,000
Carryover to Y's postacquisition part year	2,000
Excess limitation for Y's postacquisition part year ($6,000× 244/366)	4,000
Less: X's $3,000 carryover from 1971	3,000
	1,000
Carryover to Y's year 1973	1,000

(iii) The aggregate of the investment credit carryovers to Y's year 1973 is $1,000, computed as follows:

X's 1971 unused credit	0
Y's 1971 unused credit	$1,000
Total	1,000

(6) If the year of acquisition is a taxable year beginning after December 31, 1970, and if there is an unused credit of the distributor or transferor corporation or of the acquiring corporation arising in an unused credit year ending before January 1, 1971, which may be carried to such year of acquisition (see paragraph (c)(4) of this section), then in applying subparagraphs (1), (2), and (3) of this paragraph, in lieu of dividing the excess limitation for the year of acquisition between the preacquisition and postacquisition part years, only the limitation based on the amount of tax for such year (i.e., without reduction for the credit earned) shall be divided between the preacquisition and postacquisition part years. If there is also an unused credit arising in an unused credit year ending after December 31, 1970, which may be carried to the year of acquisition, then for the purpose of determining the amount of such unused credit which may be taken into account for such year of acquisition, the credit earned for the year of acquisition shall first be applied against the limitation based on amount of tax for the preacquisition part year (reduced by any investment credit carryovers to such part year from unused credit years ending before January 1, 1971) and the excess, if any, shall then be applied against the limitation based on

amount of tax for the postacquisition part year (also reduced by any investment credit carryovers to such part year from unused credit years ending before January 1, 1971).

(7) Subparagraph (6) of this paragraph may be illustrated by the following example:

Example. X Corporation and Y Corporation were organized on January 1, 1970, and each corporation files its return on the calendar year basis. On May 1, 1972, X transfers all its assets to Y in a statutory merger to which section 361 applies. X's credit earned and its limitation based on amount of tax for its taxable years 1970, 1971, and ending May 1, 1972, are as follows:

X Corporation's taxable year	Credit earned	Limitation based on amount of tax
1970	$300	
1971	100	
Ending 5–1–72	200	

Y's credit earned and its limitation based on amount of tax for its taxable years 1970 through 1972 are as follows:

Y Corporation's taxable year	Credit earned	Limitation based on amount of tax
1970	$100	
1971	200	
1972	300	$900

The sequence for the allowance of unused credits of X Corporation and Y Corporation, and the computation of carryovers to Y Corporation's calendar year 1973, may be illustrated as follows:

(i) *X Corporation's 1970 unused credit.*— The carryover to Y 1973 is $0, computed as follows:

Unused credit	$300
X Corporation's 1971 limitation based on tax	0
X Corporation's 5–1–72 limitation based on tax	0
Carryover to Y's postacquisition part year 1972	300
Limitation based on tax for Y's postacquisition part year 1972 ($900×244/366)	600
Carryover to Y's year 1973	0

(ii) *Y Corporation's 1970 unused credit.*— The carryover to Y 1973 is $0, computed as follows:

Unused credit	$100
Y Corporation's 1971 limitation based on tax	0
Carryover to Y's preacquisition part year 1972	100
Limitation based on tax for Y's preacquisition part year 1972 ($900×122/366)	300
Carryover to Y's postacquisition part year 1972	0

(iii) *Y Corporation's credit earned for 1972.*— The carryover to Y 1973 is $0, computed as follows:

Credit earned	$300
Limitation based on tax for preacquisition part year 1972 ($900×122/366)	300
Less: Y's $100 carryover from 1970	100
	$200
Carryover to Y's postacquisition part year 1972	100
Limitation based on tax for postacquisition part year 1972 ($900×244/366)	600
Less: X's $300 carryover from 1970	$300
	300
Carryover to Y's year 1973	0

(iv) *X Corporation's 1971 unused credit.*— The carryover to Y 1973 is $0, computed as follows:

Unused credit	$100
Excess of X's 1972 limitation based on tax over credit earned	0
Carryover to Y's postacquisition part year 1972	100
Limitation based on tax for postacquisition part year 1972 ($900×244/366)	600
Less:	
X's $300 carryover from 1970	300
Y's 1972 credit earned for postacquisition part year	100
	400
	200
Carryover to Y's year 1973	0

(v) *Y Corporation's 1971 unused credit.*— The carryover to Y 1973 is $100, computed as follows:

Unused credit	$200
Limitation based on tax for preacquisition part year 1972 ($900×122/366)	300
Less:	
Y's $100 carryover from 1970	100
Y's 1972 credit earned for preacquisition part year 1972	200
	300
	0
Carryover to Y's postacquisition part year	200
Limitation based on tax for postacquisition part year 1972 ($900×244/366)	600
Less:	
X's $300 carryover from 1970	300

Y's 1972 credit earned for postacquisition part year 1972	100
X's $100 carryover from 1971	100
	500
	100
Carryover to Y's year 1973	100

(vi) *X Corporation's 5–1–72 unused credit.*—The carryover to Y 1973 is $200, computed as follows:

Unused credit	$200
Limitation based on tax for postacquisition part year 1972 ($900×244/366)	600
Less:	
X's $300 carryover from 1970	300
Y's 1972 credit earned for postacquisition part year 1972	100
X's $100 carryover from 1971, and Y's $100 carryover from 1971	200
	600
	0
Carryover to Y's year 1973	200

(vii) The aggregate of the investment credit carryovers to Y 1973 is $300, computed as follows:

Y's 1971 unused credit	$100
X's 1972 unused credit	200
Total	300

(8) If the year of acquisition is a taxable year to which the limitation provided in § 1.46–2(b)(2) (relating to 20-percent limitation on carryovers and carrybacks to certain taxable years) applies, then for purposes of applying such limitation the preacquisition part year and the postacquisition part year shall each be considered a fractional part of a year, but, if the date of distribution or transfer is not on the last day of a month, the entire month in which the date of distribution or transfer occurs shall be considered as included in the preacquisition part year and no portion thereof shall be considered as included in the postacquisition part year.

(9) If the acquiring corporation succeeds to the investment credit carryovers of two or more distributor or transferor corporations on two or more dates of distribution or transfer during the same taxable year of the acquiring corporation, the manner in which the unused credits of the distributor or transferor corporations shall be applied shall be determined consistently with the rules prescribed in paragraph (c) of § 1.381(c)(1)–2.

(f) *Successive acquiring corporations.* An acquiring corporation which, in a distribution or transfer to which section 381(a) applies, acquires the assets of a distributor or transferor corporation which previously acquired the assets of another corporation in a transaction to which section 381(a) applies, shall succeed to and take into account, subject to the conditions and limitations of § 1.46–2 and this section, the investment credit carryovers available to the first acquiring corporation under § 1.46–2 and this section.

(g) *Recomputation of credit allowed by section 38 on certain property of acquiring corporation.* If section 38 property acquired by an acquiring corporation in a transaction to which section 381(a) applies is disposed of, or otherwise ceases to be section 38 property (or becomes public utility property) with respect to the acquiring corporation, before the close of the estimated useful life which was taken into account in computing the distributor or transferor corporation's qualified investment, see paragraph (e) of § 1.47–3.

(h) *Electing small business corporation.* An unused credit of a distributor or transferor corporation arising in an unused credit year for which such corporation is not an electing small business corporation (as defined in section 1371(b)) may not be carried over in a transaction to which section 381 applies to a taxable year of the acquiring corporation for which such corporation is an electing small business corporation and may not be added to the amount allowable as a credit under section 38 to the shareholders of the acquiring corporation for such taxable year. However, in such a case, a taxable year for which the acquiring corporation is an electing small business corporation shall be counted as a taxable year for purposes of determining the taxable years to which such unused credit may be carried.

(i) [Reserved]

(j) *Carryover of operating capacity for qualified intercity bus.* For rules for determining an acquiring corporation's qualified investment for the energy

credit for a qualified intercity bus, see § 1.48–9(q)(11).

(Sec. 38(b) (76 Stat. 963, 26 U.S.C. 38(b)), 48(l)(16) (94 Stat. 264, 26 U.S.C. 48(l)(16)), and 7805 (68A Stat. 917, 26 U.S.C. 7805))

[T.D. 7289, 38 FR 30554, Nov. 6, 1973, as amended by T.D. 7982, 49 FR 39544, Oct. 9, 1984; 49 FR 41246, Oct. 22, 1984]

§ 1.381(c)(24)–1 Work incentive program credit carryovers in certain corporate acquisitions.

The computation of carryovers and carrybacks of unused WIN credits in a transaction to which section 381 applies shall be made under the principles of § 1.381(c)(23)–1 (relating to the computation of carryovers and carrybacks of unused investment credits), except that the provisions of paragraph (c)(4) and paragraph (e)(6), (7), and (8) of such section shall not apply.

(Secs. 381(c)(23), 76 Stat. 971 (26 U.S.C. 381(c)(23), 381(c)(24)) 85 Stat. 557 (26 U.S.C. 381(c)(24)), 7805, 68A Stat. 917 (26 U.S.C. 7805))

[T.D. 7289, 38 FR 30557, Nov. 6, 1973]

§ 1.381(c)(25)–1 Deficiency dividend of a qualified investment entity.

(a) *Carryover requirement.* If a distributor or transferor corporation in a transaction to which section 381(a) applies—

(1) Was a qualified investment entity (within the meaning of section 860(b)) for any taxable year ending on or before the date of distribution or transfer, and

(2) A determination (as defined in section 860(e)) establishes that the transferor or distributor corporation is liable for the tax imposed by section 11(a), 56(a), 852(b), 857(b)(1), 857(b)(3)(A), or 1201(a) for such taxable year,then in determining the liability for such tax the deduction described in section 860 shall be allowed pursuant to section 381(c)(25) to such corporation for the amount of deficiency dividends paid by the acquiring corporation with respect to the distributor or transferor corporation. Except as otherwise provided in this section, the provisions of section 860 and the regulations thereunder apply with respect to a deficiency dividend deduction allowable pursuant to section 381(c)(25).

(b) *Deficiency dividends paid by the acquiring corporation with respect to the distributor or transferor corporation.* A deficiency dividend paid by the acquiring corporation with respect to the distributor or transferor corporation must be a distribution that would satisfy the definition of a deficiency dividend under section 860(f) if paid by the distributor or transferor corporation to its own shareholders. The distribution, however, shall be paid by the acquiring corporation to its own shareholders. The distribution also shall be paid after the date of distribution or transfer and on, or within 90 days after, the date of the determination but before the acquiring corporation files a claim under paragraph (c) of this section.

(c) *Claim for deduction.* A claim for deduction under this section shall be made by the acquiring corporation on Form 976 and shall be filed within 120 days after the date of the determination. The form shall contain, or be accompanied by, the information required under § 1.860–2(b)(2) in sufficient detail to properly identify the facts with respect to the distributor or transferor corporation and the acquiring corporation. The required certified copy of the resolution authorizing the payment of the dividend shall be that of the trustees, board of directors, or other authority, of the acquiring corporation. Necessary changes may be made in Form 976 in order to carry out the provisions of this paragraph. The claim shall be filed with the district director, or director of the internal revenue service center, with whom the return of the distributor or transferor corporation to which the claim relates was filed.

(d) *Effect on dividends paid deduction.* A deficiency dividend paid by the acquiring corporation that is allowable as a deduction to a distributor or transferor corporation pursuant to section 381(c)(25) shall not become a part of the dividends paid deduction of the acquiring corporation under section 561 for any taxable year.

(e) *Successive transactions to which section 381(a) applies.* The provisions of this section shall apply in the case of

successive transactions to which section 381(a) applies. Thus, if X corporation transfers its assets to Y corporation in a transaction to which section 381(a) applies and if Y corporation transfers its assets to Z corporation in a subsequent transaction to which section 381(a) applies, then, subject to the provisions of this section, X corporation may take a deficiency dividend deduction for the amount of deficiency dividends paid by Z corporation with respect to X corporation.

(Sec. 860(l) (92 Stat. 2849, 26 U.S.C. 860(l)); sec. 860(g) (92 Stat. 2850, 26 U.S.C. 860(g)); and sec. 7805 (68A Stat. 917, 26 U.S.C. 7805))

[T.D. 7767, 46 FR 11264, Feb. 6, 1981, as amended by T.D. 7936, 49 FR 2106, Jan. 18, 1984]

§ 1.381(c)(26)–1 Credit for employment of certain new employees.

(a) *Carryovers and carrybacks.* For taxable years beginning before January 1, 1984, the computation of carryovers and carrybacks of unused targeted jobs credit (new jobs credit in the case of wages paid before 1979) under section 44B (as in effect prior to enactment of the Tax Reform Act of 1984) in a transaction to which section 381(a) applies shall be made under the principles of § 1.381(c)(23)–1 (relating to the computation of carryovers and carrybacks of unused investment credit), except that the provisions of paragraph (c)(4) and paragraph (e)(6), (7) and (8) of such section shall not apply.

(b) *Other items.* See § 1.51–1(h) for a rule that applies to certain transfers of a trade or business in which a member of a targeted group is employed.

[T.D. 8062, 50 FR 46003, Nov. 6, 1985]

§ 1.381(d)–1 Operations loss carryovers of life insurance companies.

For the application of part V, subchapter C, chapter 1 of the Code to operations loss carryovers of life insurance companies, see section 812(f) and § 1.812–7 and section 381(c)(22) and § 1.381(c)(22)–1.

[T.D. 6625, 27 FR 12543, Dec. 19, 1962]

§ 1.382–1 Table of contents.

This section lists the captions that appear in the regulations for §§ 1.382–1T, 1.382–2, 1.382–2T, and 1.382–3 through 1.382–11.

§ 1.382–1T [Reserved]

§ 1.382–2 General rules for ownership change.

(a) Certain definitions for purposes of sections 382 and 383 and the regulations thereunder.
(1) Loss corporation.
(i) In general.
(ii) Distributor of transferor loss corporation in a transaction under section 381.
(iii) Separate accounting required for losses and credits of an acquiring corporation and a distributor or transferor loss corporation.
(iv) End of separate accounting for losses and credits of distributor or transferor loss corporation.
(2) Pre-change loss.
(3) Stock.
(i) In general.
(ii) Convertible stock.
(4) Testing date.
(i) In general.
(ii) Exceptions.
(b) Effective dates.
(1) In general. [Reserved]
(2) Rules provided in paragraph (a)(3)(ii) of this section.
(i) In general.
(ii) Certain convertible preferred stock.
(3) Rules provided in paragraph (a)(4) of this section.

§ 1.382–2T Definition of ownership change under section 382, as amended by the Tax Reform Act of 1986 (temporary).

(a) *Ownership change.* (1) In general.
(2) Events requiring a determination of whether an ownership change has occurred.
(i) Testing dates prior to November 5, 1992.
(ii) Information statement required.
(iii) Records to be maintained by loss corporation.
(A) Exception.
(B) Statement with respect to prior periods.
(b) *Nomenclature and assumptions.*
(c) *Computing the amount of increases in percentage ownership.* (1) In general.
(2) Example.
(3) Related and unrelated increases in percentage stock ownership.
(4) Example.
(d) *Testing period.* (1) In general.
(2) Effect of a prior ownership change.
(3) Commencement of the testing period.
(i) In general.
(ii) Exception for corporations with net unrealized built-in loss.
(4) Disregarding testing dates.
(5) Example.
(e) *Owner shift and equity structure shift.*
(1) Owner shift.

(i) Defined.
(ii) Transactions between persons who are not 5-percent shareholders disregarded.
(iii) Examples.
(2) Equity structure shift.
(i) Tax-free reorganizations.
(ii) Transactions designated under section 382(g)(3)(B) treated as equity structure shifts.
(iii) Overlap of owner shift and equity structure shift.
(iv) Examples.
(f) *Definitions.* (1) Loss corporation.
(i) In general.
(ii) End of separate accounting for losses and credit of distributor or transferor loss corporation.
(iii) Application to other successor corporations.
(2) Old loss corporation.
(3) New loss corporation.
(4) Successor corporation.
(5) Predecessor corporation.
(6) Shift.
(7) Entity.
(8) Director ownership interest.
(9) First tier entity.
(10) 5-percent owner.
(11) Public shareholder.
(12) Public owner.
(13) Public group.
(14) Higher tier entity.
(15) Indirect ownership interest.
(16) Highest tier entity.
(17) Next lower tier entity.
(18) Stock.
(i) In general.
(ii) Treating stock as not stock.
(iii) Treating interests not constituting stock as stock.
(iv) Stock of the loss corporation.
(19) Change date.
(20) Year.
(21) Old section 382.
(22) Pre-change loss.
(23) Unrelated.
(24) Percentage ownership interest.
(g) *5-percent shareholder.* (1) In general.
(2) Determination of whether a person is a 5-percent shareholder.
(3) Determination of the percentage stock ownership interest of a 5-percent shareholder.
(4) Examples.
(5) Stock ownership presumptions in connection with certain acquisitions and dispositions of loss corporation stock.
(i) In general.
(ii) Example.
(h) *Constructive ownership of stock.* (1) In general.
(2) Attribution from corporations, partnerships, estates and trusts.
(i) In general.
(ii) Limitation on attribution from entities with respect to certain interests.
(iii) Limitation on attribution from certain entities.
(iv) Examples.
(3) Attribution to corporations, partnerships, estates and trusts.
(4) Option attribution.
(i) In general.
(ii) Examples.
(iii) Contingencies.
(iv) Series of options.
(v) Interests that are similar to options.
(vi) Actual exercise of options.
(A) In general.
(B) Actual exercise within 120 days of deemed exercise.
(vii) Effect of deemed exercise of options on the outstanding stock of the loss corporation.
(A) Right of obligation to issue stock.
(B) Right or obligation to acquire outstanding stock by the loss corporation.
(C) Effect on value of old loss corporation.
(viii) Options that lapse or are forfeited.
(ix) Option rule inapplicable if pre-change losses are de minimis.
(x) Options not subject to attribution
(A) Long-held options with respect to actively traded stock.
(B) Right to receive or obligation to issue a fixed dollar amount of value of stock upon maturity of certain debt.
(C) Right or obligation to redeem stock of the loss corporation.
(D) Options exercisable only upon death, disability or mental incompetency.
(E) Right to receive or obligation to issue stock as interest or dividends.
(F) Options outstanding following an ownership change.
(*1*) In general.
(*2*) Example.
(G) Right to acquire loss corporation stock pursuant to a default under loan agreement.
(H) Agreement to acquire or sell stock owned by certain shareholders upon retirement.
(I) [Reserved]
(J) Title 11 of similar case.
(K) through (Y) [Reserved]
(xi) Certain transfers of options disregarded.
(xii) Exercise of an option that has not been treated as stock.
(xiii) Effective date.
(5) Stock transferred under certain agreements.
(6) Family attribution.
(i) [Reserved]
(j) *Aggregation and segregation rules.* (1) Aggregation of public shareholders and public owners into public groups.
(i) Public group.
(ii) Treatment of public group that is a 5-percent shareholder.
(iii) Presumption of no cross-ownership.
(iv) Identification of the public groups treated as 5-percent shareholders.

(A) Analysis of highest tier entities.
(B) Analysis of other higher tier entities and first tier entities.
(C) Aggregation of the public shareholders.
(v) Appropriate adjustments.
(vi) Examples.
(2) Segregation rules applicable to transactions involving the loss corporation.
(i) In general.
(ii) Direct public group.
(iii) Transactions to which segregation rules apply.
(A) In general.
(B) Certain equity structure shifts and transactions to which section 1032 applies.
(*1*) In general.
(*2*) Examples.
(C) Redemption-type transactions.
(*1*) In general.
(*2*) Examples.
(D) Acquisition of loss corporation stock as the result of the ownership of a right to acquire stock.
(*1*) In general.
(*2*) Example.
(E) Transactions identified in the Internal Revenue Bulletin.
(F) Issuance of rights to acquire loss corporation stock.
(*1*) In general.
(*2*) Example.
(iv) Combination of de minimis public groups.
(A) In general.
(B) Example.
(v) Multiple transactions.
(A) In general.
(B) Example.
(vi) Acquistions made by either a 5-percent shareholder or the loss corporation following application of the segregation rules.
(3) Segregation rules applicable to transactions involving first tier entities or higher tier entities.
(i) Dispositions.
(ii) Example.
(iii) Other transactions affecting direct public groups of a first tier entity or higher tier entity.
(iv) Examples.
(v) Acquistions made by a 5-percent shareholder, a higher tier entity, or a first tier entity following application of the segregation rules.
(k) *Operating rules.* (1) Presumptions regarding stock ownership.
(i) Stock subject to regulation by the Securities and Exchange Commission.
(ii) Statements under penalties of perjury.
(2) Actual knowledge regarding stock ownership.
(3) Duty to inquire as to actual stock ownership in the loss corporation.
(4) Ownership interests structured to avoid the section 382 limitation.
(5) Example.
(6) First tier entity or higher tier entity that is a foreign corporation or entity. [Reserved.]
(l) *Changes in percentage ownership which are attributable to fluctuations in value.* [Reserved]
(m) *Effective date.* (1) In general.
(2) Plan of reorganization.
(3) Earliest commencement of the testing period.
(4) Transitional rules.
(i) Rules provided in paragraph (j) of this section for testing dates before September 4, 1987.
(ii) Example.
(iii) Rules provided in paragraph (j) of this section for testing dates on or after September 4, 1987.
(iv) Rules provided in paragraphs (f)(18)(ii) and (iii) of this section.
(v) Rules provided in paragraph (a)(2)(ii) of this section.
(vi) Rules provided in paragraph (h)(4) of this section.
(vii) Rules provided in paragraph (a)(2)(i) of this section.
(5) Bankruptcy proceedings.
(i) In general.
(ii) Example.
(6) Transactions of domestic building and loan associations.
(7) Transactions not subject to section 382.
(i) Application of old section 382.
(ii) Effect on testing period.
(iii) Termination of old section 382. [Reserved]
(8) Options issued or transferred before January 1, 1987.
(i) Options issued before May 6, 1986.
(ii) Options issued on or after May 6, 1986 and before September 18, 1986.
(iii) Options issued on or after September 18, 1986 and before January 1, 1987.
(9) Examples.

§ 1.382–3 Definitions and rules relating to a 5-percent shareholder.

(a) Definitions.
(1) Entity.
(i) In general.
(ii) Examples.
(iii) Effective date.
(A) In general
(B) Special rule.
(C) Example.
(2) [Reserved]
(b) through (i) [Reserved]
(j) Modification of the segregation rules of § 1.382–2T(j)(2)(iii) in the case of certain issuances of stock.
(1) Introduction.
(2) Small issuance exception.
(i) In general.
(ii) Small issuance defined.
(iii) Small issuance limitation.
(A) In general.
(B) Class of stock defined.

(C) Adjustments for stock splits and similar transactions.
(D) Exception.
(iv) Short taxable years.
(3) Other issuances of stock for cash.
(i) In general.
(ii) Solely for cash.
(A) In general.
(B) Related issuances.
(iii) Coordination with paragraph (j)(2) of this section.
(4) Limitation on exempted stock.
(5) Proportionate acquisition of exempted stock.
(i) In general.
(ii) Actual knowledge of greater overlapping ownership.
(6) Exception for equity structure shifts.
(7) Transitory ownership by underwriter disregarded.
(8) Certain related issuances.
(9) Application to options.
(10) Issuance of stock pursuant to the exercise of certain options.
(11) Application to first tier and higher tier entities.
(12) Certain non-stock ownership interests.
(13) Examples.
(14) Effective date.
(i) In general.
(ii) Effective date for paragraph (j)(10) of this section.
(iii) Election to apply this paragraph (j) retroactively.
(A) Election.
(B) Amended returns.
(C) Revised information statements.
(k) Special rules for certain regulated investment companies.
(1) In general.
(2) Effective date.
(i) General rule.
(ii) Election to apply prospectively.

§ 1.382–4 Constructive ownership of stock.

(a) In general. [Reserved]
(b) Attribution from corporations, partnerships, estates and trusts. [Reserved]
(c) Attribution to corporations, partnerships, estates and trusts. [Reserved]
(d) Treatment of options as exercised.
(1) General rule.
(2) Options treated as exercised.
(i) Issuance or transfer.
(ii) Subsequent testing dates.
(3) The ownership test.
(4) The control test.
(i) In general.
(ii) Operating rules.
(A) Person and related persons.
(B) Indirect ownership interest.
(5) The income test.
(6) Application of the ownership, control, and income tests.
(i) In general.
(ii) Application of ownership test.
(iii) Application of control test.
(iv) Application of income test.
(7) Safe harbors.
(i) Contracts to acquire stock.
(ii) Escrow, pledge, or other security agreements.
(iii) Compensatory options.
(iv) Options exercisable only upon death, disability, mental incompetency or retirement.
(v) Rights of first refusal.
(vi) Options designated in the Internal Revenue Bulletin.
(8) Additional rules.
(i) Contracts to acquire stock.
(ii) Indirect transfer of an option.
(iii) Options related to interests in noncorporate entities.
(iv) Puts.
(9) Definition of option.
(i) In general.
(ii) Convertible stock.
(iii) Series of options.
(iv) General principles of tax law.
(10) Subsequent treatment of options treated as exercised on a change date.
(i) In general.
(ii) Alternative look-back rule for options exercised within 3 years after change date.
(11) Transfers not subject to deemed exercise.
(12) Certain rules regarding non-stock interests as stock.
(e) Stock transferred under certain agreements. [Reserved]
(f) Family attribution. [Reserved]
(g) Definitions.
(h) Effective date.
(1) In general. [Reserved]
(2) Option attribution rules.
(i) General rule.
(ii) Special rule for control test.
(iii) Convertible stock issued prior to July 20, 1988.
(A) In general.
(B) Exceptions.
(*1*) Nonvoting convertible preferred stock.
(*2*) Other convertible stock.
(iv) Convertible stock issued on or after July 20, 1988, and before November 5, 1992.
(v) Certain options in existence immediately before and after an ownership change.
(vi) Election to apply § 1.382–2T(h)(4).
(A) In general.
(B) Additional consequences of election.
(C) Time and manner of making the election.
(D) Amended returns.
(3) Special rule for options subject to attribution under § 1.382–2T(h)(4).

§ 1.382–5 Section 382 limitation. [Reserved]

§ 1.382–5T Section 382 limitation (temporary).

(a) Scope.
(b) Computation of value.
(c) Short taxable year.

(d) Successive ownership changes and absorption of a section 382 limitation.
(1) In general.
(2) Recognized built-in gains and losses.
(3) Effective date.
(e) Controlled groups.
(f) Effective date.

§ 1.382–6 Allocation of income and loss to periods before and after the change date for purposes of section 382.

(a) General rule.
(b) Closing-of-the-books election.
(1) In general.
(2) Making the closing-of-the-books election.
(i) Time and manner.
(ii) Election irrevocable.
(3) Special rules relating to consolidated and controlled groups.
(i) Consolidated groups.
(ii) Controlled groups.
(c) Operating rules for determining net operating loss, taxable income, net capital loss, modified capital gain net income, and special allocations.
(1) In general.
(2) Adjustment to net operating loss.
(i) Determination of remaining capital gain.
(ii) Reduction of net operating loss by remaining capital gain.
(d) Coordination with rules relating to the allocation of income under § 1.1502–76(b).
(e) Allocation of certain credits.
(f) Examples.
(g) Definitions and nomenclature.
(1) Change year.
(2) Pre-change period.
(3) Post-change period.
(4) Modified capital gain net income.
(h) Effective date.

§ 1.382–7 Built-in gains and losses. [Reserved]

§ 1.382–8 Controlled groups. [Reserved]

§ 1.382–8T Controlled groups (temporary).

(a) Introduction.
(b) Controlled group loss and controlled group with respect to a controlled group loss.
(c) Computation of value.
(1) Reduction in value by the amount restored.
(2) Restoration of value.
(3) Reduction in value by the amount restored.
(4) Appropriate adjustments.
(5) Certain reductions in the value of members of a controlled group.
(d) No double reduction.
(e) Definitions and nomenclature.
(1) Definitions in Section 382 and the regulations thereunder.
(2) Controlled group.
(3) Component member.
(4) Predecessor and successor corporation.
(f) Coordination between consolidated groups and controlled groups.
(g) Examples.
(h) Time and manner of filing election to restore.
(1) Statement required.
(2) Revocation of election.
(3) Filing by component member.
(i) [Reserved]
(j) Effective date.
(1) In general.
(2) Transition rule.
(i) In general.
(ii) Special transition rules for controlled groups that had ownership changes before January 29, 1991.
(3) Amended returns.

§ 1.382–9 Special rules under section 382 for corporations under the jurisdiction of a court in a title 11 or similar case.

(a) Introduction.
(b) Application of section 382(1)(5).
(c) [Reserved]
(d) Rules for determining whether stock of the loss corporation is owned as a result of being a qualified creditor.
(1) Qualified creditor.
(2) General rules for determining whether indebtedness is qualified indebtedness.
(i) Definition.
(ii) Determination of beneficial ownership.
(iii) Duty of inquiry.
(iv) Ordinary course indebtedness.
(3) Treatment of certain indebtedness as continuously owned by the same owner.
(i) In general.
(ii) Operating rules.
(iii) Indebtedness owned by beneficial owner who becomes a 5-percent shareholder or 5-percent entity.
(iv) Example.
(4) Special rule if indebtedness is a large portion of creditor's assets.
(i) In general.
(ii) Applicable period.
(iii) Determination of ownership change.
(iv) Reliance on statement.
(5) Tacking of ownership periods.
(i) Transferee treated as owning indebtedness for period owned by transferor.
(ii) Qualified transfer.
(iii) Exception.
(iv) Debt-for-debt exchanges.
(6) Effective date.
(i) In general.
(ii) Elections and amended returns.
(A) Election to apply this paragraph (d) retroactively.
(B) Election to revoke section 382(l)(5)(H) election.
(C) Amended returns.
(e) Option attribution for purposes of determining stock ownership under section 382(1)(5)(A)(ii).
(1) In general.

(2) Special rules.
(i) Lapse or forfeiture of options deemed exercised.
(ii) Actual exercise of options not deemed exercised.
(iii) Amended returns.
(3) Examples.
(4) Effective dates.
(i) In general.
(ii) Special rule for interest or dividends.
(f) through (h) [Reserved].
(i) Election not to apply section 382(l)(5).
(j) Value of the loss corporation in an ownership change to which section 382(l)(6) applies.
(k) Rules for determining the value of the stock of the loss corporation.
(1) Certain ownership interests treated as stock.
(2) Coordination with section 382(e)(2).
(3) Coordination with section 382(e)(3).
(4) Coordination with section 382(l)(1).
(5) Coordination with section 382(l)(4).
(6) Special rule for stock not subject to the risk of corporate business operations.
(i) In general.
(ii) Coordination of special rule and other rules affecting value.
(7) Limitation on value of stock.
(l) Rules for determining the value of the loss corporation's pre-change assets.
(1) In general.
(2) Coordination with section 382(e)(2).
(3) Coordination with section 382(e)(3).
(4) Coordination with section 382(l)(1).
(5) Coordination with section 382(l)(4).
(m) Continuity of business requirement.
(1) Under section 382(1)(5).
(2) Under section 382(l)(6).
(n) Ownership change in a title 11 or similar case succeeded by another ownership change within two years.
(1) Section 382(l)(5) applies to the first ownership change.
(2) Section 382(l)(6) applies to the first ownership change.
(o) Options not subject to attribution.
(p) Effective date for rules relating to section 382(l)(6).
(1) In general.
(2) Ownership change to which section 382(l)(6) applies occurring before March 17, 1994.

§ 1.382–10 [Reserved]

§ 1.382–11 Effective dates. [Reserved]

[T.D. 8149, 52 FR 29674, Aug. 11, 1987, as amended by T.D. 8264, 54 FR 38666, Sept. 20, 1989; T.D. 8352, 56 FR 29434, June 27, 1991. Redesignated by T.D. 8440, 57 FR 45711, Oct. 5, 1992; T.D. 8490, 58 FR 51573, Oct. 4, 1993; T.D. 8531, 59 FR 12835, Mar. 18, 1994; T.D. 8530, 59 FR 12842, Mar. 18, 1994; T.D. 8529, 59 FR 12846, Mar. 18, 1994; T.D. 8546, 59 FR 32080, June 22, 1994; T.D. 8679, 61 FR 33314, June 27, 1996]

§ 1.382–1T [Reserved]

§ 1.382–2 General rules for ownership change.

(a) *Certain definitions for purposes of sections 382 and 383 and the regulations thereunder.* The following definitions apply for purposes of sections 382 and 383 and the regulations thereunder.

(1) *Loss corporation*—(i) *In general.* The term *loss corporation* means a corporation which—

(A) Is entitled to use a net operating loss carryforward, a capital loss carryover, a carryover of excess foreign taxes under section 904(c), a carryforward of a general business credit under section 39, or a carryover of a minimum tax credit under section 53,

(B) For the taxable year that includes a testing date, as defined in paragraph (a)(4) of this section or § 1.382–2T(a)(2)(i), whichever is applicable (determined for purposes of this paragraph (a)(1) without regard to whether the corporation is a loss corporation), has a net operating loss, a net capital loss, excess foreign taxes under section 904(c), unused general business credits under section 38, or an unused minimum tax credit under section 53, or

(C) Has a net unrealized built-in loss (determined for purposes of this paragraph (a)(1) by treating the date on which such determination is made as the change date). See section 382(h)(3) for the definition of net unrealized built-in loss.

See section 383 and § 1.383–1 for rules relating to a loss corporation that has an ownership change and has capital losses, excess foreign taxes, general business credits or minimum tax credits. Any predecessor or successor to a loss corporation described in this paragraph (a)(1) is also a loss corporation.

(ii) *Distributor or transferor loss corporation in a transaction under section 381.* Notwithstanding that a loss corporation ceases to exist under state law, if its net operating loss carryforwards, excess foreign taxes, or other items described in section 381(c) are succeeded to and taken into account by an acquiring corporation in a transaction described in section 381(a), such loss corporation shall be treated as continuing in existence until—

(A) Any pre-change losses (excluding pre-change credits described in § 1.383–1(c)(3)), determined as if the date of such transaction were the change date, are fully utilized or expire under either section 172 or section 1212,

(B) Any net unrealized built-in losses, determined as if the date of such transaction were the change date, may no longer be treated as pre-change losses, and

(C) Any pre-change credits (described in § 1.383–1(c)(3)), determined as if the date of such transaction were the change date, are fully utilized or expire under sections 39, 53, or 904(c).

Following a transaction described in the preceding sentence, the stock of the acquiring corporation shall be treated as the stock of the loss corporation for purposes of determining whether an ownership change occurs with respect to the pre-change losses and net unrealized built-in losses that may be treated as pre-change losses of the distributor or transferor corporation.

(iii) *Separate accounting required for losses and credits of an acquiring corporation and a distributor or transferor loss corporation.* Except as provided in § 1.382–2T(f)(1)(ii), pre-change losses (determined as if the testing date were the change date and treating the amount of any net unrealized built-in loss as a pre-change loss), that are succeeded to and taken into account by an acquiring corporation in a transaction to which section 381(a) applies must be accounted for separately from losses and credits of the acquiring corporation for purposes of applying this section. See *Example (2)* of § 1.382–2T(e)(2)(iv) of this section.

(iv) *End of separate accounting for losses and credits of distributor or transferor loss corporation.* For further guidance, see § 1.382–2T(f)(1)(ii).

(2) *Pre-change loss.* The term *pre-change loss* means—

(i) Any net operating loss carryforward of the old loss corporation to the taxable year ending on the change date or in which the change date occurs,

(ii) Any net operating loss of the old loss corporation for the taxable year in which the ownership change occurs to the extent such loss is allocable to the period in such year on or before the change date.

(iii) Any recognized built-in loss for any recognition period taxable year (within the meaning of 382(h)),

(iv) Any pre-change capital losses described in §1.383-1T(c)(2)(i) and (ii), and

(v) Any pre-change credits described in 1.383-1T(c)(3).

(3) *Stock*—(i) *In general.* Except as provided in this paragraph (f)(18), the term *stock* means stock other than stock described in section 1504(a)(4). Notwithstanding the preceding sentence, stock that is not described in section 1504(a)(4) solely because it is entitled to vote as a result of dividend arrearages shall be treated as so described and thus shall not be considered stock. Stock described in section 1504(a)(4), however, is not excluded for purposes of determining the value of the loss corporation under section 382(e). The determination of the percentage of stock of any corporation owned by any person shall be made on the basis of the relative fair market value of the stock owned by such person to the total fair market value of the outstanding stock of the corporation. Solely for purposes of determining the percentage of stock owned by a person, each share of all the outstanding shares of stock that have the same material terms is treated as having the same value. Thus, for example, a control premium or blockage discount is disregarded in determining the percentage of stock owned by any person. The previous two sentences of this paragraph (a)(3)(i) apply to any testing date occurring on or after January 29, 1991.

(ii) *Convertible stock.* The term *stock* includes any convertible stock. For rules regarding the treatment of certain convertible stock as an option, see § 1.382–4(d)(9)(ii).

(4) *Testing date*—(i) *In general.* Except as provided in paragraph (a)(4)(ii) of this section, a loss corporation is required to determine whether an ownership change has occurred immediately after any owner shift, or issuance or transfer (including an issuance or transfer described in § 1.382–4(d)(8)(i) or (ii)) of an option with respect to stock of the loss corporation that is treated as exercised under § 1.382–4(d)(2). Each

date on which a loss corporation is required to make a determination of whether an ownership change has occurred is referred to as a testing date. All computations of increases in percentage ownership are to be made as of the close of the testing date and any transactions described in this paragraph (a)(4) that occur on that date are treated as occurring simultaneously at the close of the testing date. See § 1.382–2T(e)(1) for the definition of owner shift. The term *option,* as used in this paragraph (a)(4), includes interests that are treated as options under § 1.382–4(d)(9). For rules regarding the determination of whether dates prior to November 5, 1992, are testing dates, see § 1.382–2T(a)(2)(i).

(ii) *Exceptions.* A loss corporation is not required to determine whether an ownership change has occurred immediately after—

(A) Any transfer of stock, or an option with respect to stock, of the loss corporation in any of the circumstances described in section 382(l)(3)(B) (death, gift, divorce, *etc.*); or

(B) The transfer of an option described in § 1.382–4(d)(11)(i) or (ii) (relating to transfers between persons who are not 5-percent shareholders or between members of certain public groups).

(b) *Effective dates*—(1) *In general.* [Reserved]

(2) *Rules provided in paragraph (a)(3)(ii) of this section*—(i) *In general.* Except as provided in paragraph (b)(2)(ii) of this section, the rules provided in paragraph (a)(3)(ii) of this section apply with respect to any convertible stock.

(ii) *Certain convertible preferred stock.* Convertible stock that, when issued, would be described in section 1504(a)(4) by disregarding subparagraph (D) thereof and by ignoring the potential participation in corporate growth that the conversion feature may offer is treated as stock described in that section (and thus is not treated as stock for the purpose of determining whether an ownership change occurs, but is taken into account for the purpose of determining the value of the loss corporation immediately before an ownership change; see sections 382(e)(1) and 382(k)(6)(A)) if—

(A) The stock was issued on or after July 20, 1988, and prior to November 5, 1992; or

(B) The stock was issued prior to July 20, 1988, and the loss corporation makes the election described in Notice 88–67, 1988–1 C.B. 555, (see § 601.601(d)(2)(ii)(*b*) of this chapter for availability of Cumulative Bulletins (C.B.)) on or before the earlier of the date prescribed in the Notice or December 7, 1992.

(3) *Rules provided in paragraph (a)(4) of this section.* The rules provided in paragraph (a)(4) of this section apply to determine whether dates on or after November 5, 1992, are testing dates.

[T.D. 8352, 56 FR 29434, June 27, 1991, as amended by T.D. 8405, 57 FR 10740, Mar. 30, 1992; 57 FR 24188, June 8, 1992; T.D. 8531, 59 FR 12836, Mar. 18, 1994; T.D. 8679, 61 FR 33315, June 27, 1996]

§ 1.382–2T Definition of ownership change under section 382, as amended by the Tax Reform Act of 1986 (temporary).

(a) *Ownership change*—(1) *In general.* A corporation is a new loss corporation and thus subject to limitation under section 382 only if an ownership change has occurred with respect to such corporation. An ownership change occurs with respect to a corporation if it is a loss corporation on a testing date and, immediately after the close of the testing date, the percentage of stock of the corporation owned by one or more 5-percent shareholders has increased by more than 50 percentage points over the lowest percentage of stock of such corporation owned by such shareholders at any time during the testing period. See paragraph (a)(2)(i) of this section for the definition of testing date. See paragraph (d) of this section for the definition of testing period. See § 1.382–2(a)(1) and paragraph (f)(3) of this section for the respective definition of loss corporation and new loss corporation. See paragraph (g) of this section for the definition of 5-percent shareholder. See section 383 and § 1.383–1 for rules relating to loss corporations that have an ownership change and have capital loss carryovers, excess foreign taxes carried over under section 904(c), carryovers of general business

credits under section 39, or unused minimum tax credits under section 53.

(2) *Events requiring a determination of whether an ownership change has occurred*—(i) *Testing dates prior to November 5, 1992.* Except as otherwise provided in this paragraph (a)(2)(i), a loss corporation is required to determine whether an ownership change has occurred immediately after any owner shift, any equity structure shift, or any transaction in which an option with respect to stock of the loss corporation is—

(A) Transferred to (or by) a 5-percent shareholder (or a person who would be 5-percent shareholder if the option were treated as exercised), or

(B) Issued by the loss corporation, a first tier entity, or a higher tier entity that owns five percent or more of the loss corporation (determined without regard to the application of paragraph (h)(2)(i)(A) of this section). Notwithstanding the preceding sentence, any transfer of stock of the loss corporation (or an option with respect to such stock) in any of the circumstances described in section 382(l)(3)(B), or any equity structure shift that is not also an owner shift, is not an event that requires the loss corporation to make a determination of whether an ownership change has occurred. For purposes of this section, each date on which a loss corporation is required to make a determination of whether an ownership change has occurred is referred to as a testing date, all computations of increases in percentage ownership are to be made as of the close of the testing date, and any transactions described in this paragraph (a)(2)(i) that occur on that date are treated as occurring simultaneously at the close of the testing date. See paragraphs (e)(1) and (2) of this section for the respective definitions of owner shift and equity structure shift. See paragraphs (f)(9) and (14) of this section for the respective definitions of first tier entity and higher tier entity. See paragraph (m)(4)(vii) of this section for special rules regarding the effective date of the provisions of this paragraph (a)(2)(i).

(ii) *Information statement required.* A loss corporation must file a statement with its income tax return for each taxable year that it is a loss corporation in which an owner shift, equity structure shift or other transaction described in paragraph (a)(2)(i) of this section occurs. The statement must—

(A) Indicate whether any testing dates occurred during the taxable year;

(B) Identify each testing date, if any, on which an ownership change occurred;

(C) Identify the testing date, if any, that occurred during and closest to the end of each of the three month periods ending on March 31, June 30, September 30 and December 31 during the taxable year, regardless of whether an ownership change occurred on the testing date,

(D) Identify each 5-percent shareholder on each such testing date;

(E) State the percentage ownership of the stock of the loss corporation for each 5-percent shareholder as of each such testing date and the increase, if any, in such ownership during the testing period; and

(F) Disclose the extent to which the loss corporation relied upon the presumptions regarding stock ownership under paragraph (k)(i) of this section to determine whether an ownership change occurred on any identified testing date.

See § 1.383–1(k) and paragraph (m)(4)(v) of this section for transitional rules regarding the filing of information statements.

(iii) *Records to be maintained by loss corporation.* A loss corporation shall keep such records as are necessary to determine: (A) The identity of its 5-percent shareholders, (B) the percentage of its stock owned by each such 5-percent shareholder, and (C) whether the section 382 limitation is applicable. Such records shall be retained so long as they may be material in the administration of any internal revenue law.

(b) *Nomenclature and assumptions.* For purposes of the example in this section—

(1) L is a loss corporation, and, if there is more than one loss corporation, they are designated as L_1, L_2, L_3, etc.

(2) P is a corporation that is not a loss corporation, and, if there is more than one such corporation, they are designated as P_1, P_2, P_3, etc.

(3) HC is a corporation whose assets consist solely of the stock of other corporations.

(4) E is an entity other than a corporation (e.g., a partnership), and, if there is more than one such entity, they are designated as E_1, E_2, E_3, etc.

(5) Unless otherwise stated—

(i) A, B, C, D, AA, BB, CC, and DD are unrelated individuals who own interests in corporations or other entities only to the extent expressly stated,

(ii) All corporations have one class of stock outstanding and each share of stock has the same fair market value as each other share,

(iii) The capital structure of the loss corporation and its business do not change over time, and

(iv) The rules of paragraphs (k)(2) and (4) of this section are not applicable.

(6) Public L represents a group of unrelated individuals and entities that own direct (and not indirect) stock ownership interests in loss corporation L, each of whom owns less than five percent of the stock of the loss corporation, and, if there is more than one loss corporation, such groups are designated as Public L_1, Public L_2, Public L_3, etc.

(7) Public P represents a group of unrelated individuals and entities that own direct (and not indirect) stock ownership interests in corporation P, each of whom owns less than five percent of the stock of the corporation, and, if there is more than one corporation, such groups are designated as Public P_1, P_2, P_3, etc.

(8) Public E represents a group of unrelated individuals and entities that own direct (and not indirect) ownership interests in entity E, each of whom owns less than five percent of the entity, and, if there is more than one entity, such groups are designated as Public E_1, Public E_2, Public E_3, etc.

(c) *Computing the amount of increases in percentage ownership*—(1) *In general.* In order to determine whether an ownership change has occurred on a testing date, the loss corporation must identify each 5-percent shareholder whose percentage of stock ownership in the loss corporation immediately after the close of the testing date has increased, compared to such shareholder's lowest percentage of stock ownership in such corporation at any time during the testing period. The amount of the increase in the percentage of stock ownership in the loss corporation of each 5-percent shareholder must be computed separately by comparing the percentage ownership of each such 5-percent shareholder immediately after the close of the testing date to such shareholder's lowest percentage ownership at any time during the testing period. Each such increase in the percentage ownership of a 5-percent shareholder is then added together with any other such increases of other 5-percent shareholders to determine whether an ownership change has occurred. Because only those 5-percent shareholders whose percentages of stock ownership have increased are taken into account, a 5-percent shareholder is disregarded if his percentage of stock ownership, immediately after the close of the testing date, has decreased (or has remained the same), compared to his lowest percentage ownership interest on any previous date during the testing period.

(2) *Example.*

(i) A and B each own 40 percent of the outstanding L stock. The remaining 20 percent of the L stock is owned by 100 unrelated individuals, none of whom own as much as five percent of L stock (''Public L''). C negotiates with A and B to purchase all their stock in L.

(ii) The acquisitions from both A and B are completed on September 13, 1990. C's acquisition of 80 percent of L stock results in an ownership change because C's percentage ownership has increased by 80 percentage points as of the testing date, compared to his lowest percentage ownership in L at any time during the testing period (0 percent).

(3) *Related and unrelated increases in percentage stock ownership.* The determination whether an ownership change has occurred is made without regard to whether the changes in stock ownership of the loss corporation (by one or more 5-percent shareholders) result from related or unrelated events.

(4) *Example.*

(i) L has outstanding 200 shares of common stock. A, B and C respectively own 100, 50 and 50 shares of the L stock. On January 2, 1988, A sells 60 shares of L stock to B. Thus, B's percentage ownership interest in L increases by 30 percentage points, from 50 shares to 110 shares. On January 1, 1989, A

purchases C's entire interest in L. Thus, A's percentage ownership interest in L increases by 25 percentage points, compared to his lowest percentage ownership interest in L, from 40 shares immediately following the January 2, 1988 sale to B to 90 shares. Even though A's ownership interest in L as of January 1, 1989 has decreased, compared to his 50 percent ownership interest at the beginning of the testing period, A is a 5-percent shareholder who must be taken into account for purposes of the computation required under paragraph (c)(1) of this section because his interest in L on that testing date (45 percent) has increased, compared to his lowest percentage ownership interest in L at any time during the testing period (20 percent following the sale to B).

(ii) Accordingly, although A and B jointly have increased their aggregate total ownership interest in L between January 2, 1988 and January 1, 1989 by only 25 percentage points (*i.e.*, the total ownership interest in L held by A and B at all times is not less than a 75 percent interest), the total of their separate increases in the percentage stock ownership of L, compared to their respective lowest percentage ownership interests at any time during the testing period, is 55 percentage points. Thus, an ownership change occurs as a result of A's acquisition of L stock on January 1, 1989.

(d) *Testing period*—(1) *In general.* Except as otherwise provided in paragraphs (d) and (m) of this section, the testing period for any testing date is the three-year period ending on the testing date. See paragraph (a)(2)(i) of this section for the definition of testing date.

(2) *Effect of a prior ownership change.* Following an ownership change, the testing period for determining whether a subsequent ownership change has occurred shall begin no earlier than the first day following the change date of the most recent ownership change. See paragraph (f)(19) of this section for the definition of change date.

(3) *Commencement of the testing period*—(i) *In general.* Except as otherwise provided in paragraph (d)(3)(ii) of this section, the testing period for any loss corporation shall not begin before the earlier of the first day of either—

(A) The first taxable year from which there is a loss or excess credit carryforward to the first taxable year ending after the testing date, or

(B) The taxable year in which the testing date occurs.

(ii) *Exception for corporations with net unrealized built-in loss.* Paragraph (d)(3)(i) of this section shall not apply if the corporation has a net unrealized built-in loss (determined after application of section 382(h)(3)(B)) on the testing date, unless the loss corporation establishes the taxable year in which the net unrealized built-in loss first accrued.

In that event, the testing period shall not begin before the earlier of—

(A) The first day of the taxable year in which the net unrealized built-in loss first accrued, or

(B) The day described in paragraph (d)(3)(i) of this section. See section 382(h) for the definition of net unrealized built-in loss.

(4) *Disregarding testing dates.* Any testing date that occurs before the beginning of the testing period shall be disregarded for purposes of this section.

(5) *Example.*

(i) A owns all 100 outstanding shares of L stock. A sells 40 shares to B on January 1, 1988. C purchases 20 shares of L stock from A on July 1, 1991. In determining if an ownership change occurs on the July 1, 1991 testing date, B's acquisition of L stock is disregarded because it occurred before the testing period that ends on such testing date. Thus, B's ownership interest in L does not increase during the testing period, and no ownership change results from C's acquisition.

(ii) The facts are the same as in (i), except that throughout the period during which B negotiated his stock purchase transaction with A, B knew that C intended to attempt to acquire a significant stock interest in L. Also, B and C have been partners in a number of significant business ventures. The result is the same as in (i).

(e) *Owner shift and equity structure shift*—(1) *Owner shift*—(i) *Defined.* For purposes of this section, an owner shift is any change in the ownership of the stock of a loss corporation that affects the percentage of such stock owned by any 5-percent shareholder. See paragraph (g) of this section for the definition of a 5-percent shareholder. An owner shift includes, but is not limited to, the following transactions:

(A) A purchase of disposition of loss corporation stock by a 5-percent shareholder,

(B) A section 351 exchange that affects the percentage of stock owned by a 5-percent shareholder,

(C) A redemption or a recapitalization that affects the percentage of stock owned by a 5-percent shareholder,

(D) An issuance of loss corporation stock that affects the percentage of stock owned by a 5-percent shareholder, and

(E) An equity structure shift that affects the percentage of stock owned by a 5-percent shareholder.

(ii) *Transactions between persons who are not 5-percent shareholders disregarded.* Transfers of loss corporation stock between persons who are not 5-percent shareholders of such corporation (and between members of separate public groups resulting from the application of the segregation rules of paragraphs (j)(2) and (3)(iii) of this section) are not owner shifts and thus are not taken into account. See paragraph (h)(4)(xi) of this section for a similar rule applicable to transfers of options.

(iii) *Examples.*

Example (1) . A has owned all 1000 shares of outstanding L stock for more than three years. On June 15, 1988, A sells 300 of his L shares to B. This transaction is an owner shift. No other 5-percent shareholder has increased his percentage ownership of L stock during the testing period. Thus, the owner shift resulting from B's acquisition does not result in an ownership change, because B has increased his stock ownership in L by only 30 percentage points.

Example (2). The facts are the same as in *Example (1).* In addition, on June 15, 1989, L issues 100 shares to each of C, D and AA. The stock issuance is an owner shift. The transaction, however, does not result in an ownership change, because B, C, D and AA (the 5-percent shareholders whose stock ownership has increased as of the testing date, compared to any other time during the testing period) have increased their percentage of stock ownership in L by a total of only 46.2 percentage points during the testing period (by 23.1 percentage points [300 shares/1300 shares] for B, and 7.7 percentage points [100 shares/1300 shares] for each of C, D and AA).

Example (3). All 1000 shares of L stock are owned by a group of 100 unrelated individuals, none of whom own as much as five percent of L stock (''Public L''). Several of the members of Public L sell their L stock, amounting to a 30 percent ownership interest in L, to B on June 15, 1988. The sale of stock to B is an owner shift. Between June 16, 1988 and June 15, 1989, each of the remaining individuals in Public L sells his stock to another person who is not a 5-percent shareholder. Under paragraph (e)(1)(ii) of this section, trading activity among the members of Public L is disregarded and does not result in an owner shift. On June 15, 1989, L issues 100 shares to each of C, D and AA. The only sale transactions by members of Public L that are taken into account in determining whether an ownership change occurs on June 15, 1989 are the sales to B on June 15, 1988. Because B, C, D and AA together have increased their percentage ownership of L stock as a result of B's purchase and the stock issuance by an amount not in excess of 50 percentage points during the testing period ending on June 15, 1988, an ownership change does not occur on that date.

Example (4). The facts are the same as in *Example (2).* In addition, on December 15, 1989, L redeems 200 of the L shares from A. The redemption is an owner shift that results in an ownership change, because B, C, D and AA are 5-percent shareholders whose percentage ownership of L increase by a total of 54.6 percentage points during the testing period (by 27.3 percentage points [300 shares/1100 shares] for B and 9.1 percentage points [100 shares/1100 shares] for each of C, D and AA).

Example (5). L is owned entirely by 10,000 unrelated shareholders, none of whom owns as much as five percent of the stock of L (''Public L''). Accordingly, Public L is L's only 5-percent shareholder. See paragraph (j)(1) of this section. There are one million shares of common stock outstanding. On December 1, 1988, L issues two million new shares of its common stock to members of the public, none of whom owned any L stock prior to the issuance. Following the public offering, no shareholder of L owns, directly or indirectly, five percent or more of L stock. Under paragraph (j)(2) of this section, however, all of the newly issued stock is treated as acquired by a 5-percent shareholder (''Public NL'') that is unrelated to Public L. Therefore, the public offering constitutes an owner shift that results in an ownership change because Public NL's percentage of stock ownership in L increased by 66⅔ percentage points (two million shares acquired in the public offering/three million shares outstanding following the offering) over its lowest percentage ownership during the testing period (0 percent prior to the offering).

Example (6). The facts are the same as in *Example (5),* except that L issues only 500,000 new shares of L stock on December 1, 1988, and Public NL's percentage ownership interest in L increases by only 33⅓ percentage points (500,000 shares acquired in the public offering/1.5 million shares outstanding following the offering). During the two years following December 2, 1988, 14 percent of the stock outstanding on that date is sold over a

public stock exchange. On December 3, 1990, A purchases five percent of L stock (75,000 shares) over a public stock exchange. The purchase of five percent of L stock by A is an owner shift and is presumed to have been made proportionately from Public L and Public NL under paragraph (j)(1)(vi) of this section. Under paragraph (e)(1)(ii) of this section, transfers of L stock in transactions not involving A (*i.e.,* in transactions among or between members of separate public groups resulting from the application of paragraphs (j)(2) and (3) of this section) are not taken into account, and do not constitute owner shifts. (Transfers between members of Public NL and Public L, which are treated as separate 5-percent shareholders solely by virtue of paragraph (j)(2) of this section, are disregarded even if L has actual knowledge of any such transfers.) A and Public NL, the only 5-percent shareholders whose interests in L have increased during the testing period, have increased their respective stock ownership by only 36⅔ percentage points—five percentage points for A [75,000 shares/1.5 million shares outstanding] and 31⅔ percentage points for Public NL [((500,000 shares issued in the public offering)—(5 percent × 500,000 shares presumed to have been acquired by A)) /1.5 million shares outstanding]. Accordingly, there is no ownership change with respect to L notwithstanding that, taking into account the public trading, a change of more than 50 percentage points in the ultimate beneficial ownership of L stock occurred during the three-year period ending on the December 3, 1990 testing date.

Example 7. The facts are the same as in *Example 6,* except that five percent of the L stock has always been owned by P which, in turn, has always been owned by Public P. On December 6, 1990, P sells all of its L stock over a public stock exchange. Although the trading of P stock among persons that are not 5-percent share-holders (without regard to the segregation rules of paragraph (j) of this section) are disregarded under paragraph (e)(1)(ii) of this section, the disposition of the L stock by P is not disregarded because the L stock is transferred in a transaction that is subject to paragraph (j)(3)(i) of this section.

(2) *Equity structure shift*—(i) *Tax-free reorganizations.* An equity structure shift is any reorganization within the meaning of section 368 with respect to which the loss corporation is a party to the reorganization, except that such term does not include a reorganization described in—

(A) Section 368(a)(1)(D) or (G) unless the requirements of section 354(b)(1) are met, or

(B) Section 368(a)(1)(F).

(ii) *Transactions designated under section 382(g)(3)(B) treated as equity structure shifts.* [Reserved]

(iii) *Overlap of owner shift and equity structure shift.* Any equity structure shift that affects the percentage of loss corporation stock owned by a 5-percent shareholder also constitutes an owner shift. See paragraph (e)(i)(E) of this section

(iv) *Examples.*

Example (1). A owns all of the stock of L and B owns all of the stock of P. On October 13, 1988, L merges into P in a reorganization described in section 368a(1)(A). As a result of the merger, A and B own 25 and 75 percent, respectively, of the stock of P. The merger is an equity structure shift (and, because it affects the percentage of L stock owned by 5-percent shareholders, it also constitutes an owner shift). On the October 13, 1988 testing date, B is a 5-percent shareholder whose stock ownership in the loss corporation following the merger has increased by 75 percentage points over his lowest percentage of stock ownership in L at any time during the testing period (0 percent prior to the merger). Accordingly, an ownership change occurs as a result of the merger. P is thus a new loss corporation and L's pre-change losses are subject to limitation under section 382.

Example (2). (i) A owns 100 percent of L_1 stock and B owns 100 percent of L_2 stock. On January 1, 1988, L_1 merges into L_2 in a reorganization described in section 368(a)(1)(A). Immediately after the merger, A and B own 40 percent and 60 percent, respectively, of the L_2 stock. There is an equity structure shift (as well as an owner shift) with respect to both L_1 and L_2 on January 1, 1988.

(*ii*) Because the percentage of L_2 stock owned by B immediately after the merger (60 percent) increases by more than 50 percentage points over the lowest percentage of the stock of L_1 owned by B during the testing period (0 percent prior to the merger), there is an ownership change with respect to L_1. L_2 is a new loss corporation and thus, under §1.382–2(a)(1)(iii) of this section, the pre-change losses of L_1 must be accounted for separately by L_2 from the losses of L_2 (immediately before the ownership change) and are subject to limitation under section 382. See paragraph (f)(1)(ii) of this section for rules that end separate accounting for L_1's pre-change losses on any testing date occurring on or after January 29, 1991.

(*iii*) L_2 is a new loss corporation because it is a successor corporation to L_1. There is no ownership change with respect to L_2, however, because A's stock ownership in L_2 increased by only 40 percentage points (to 40 percent) over the amount owned by A prior to the merger (0 percent). Therefore, the pre-

change losses of L_2 are not limited under section 382 as a result of the merger.

Example (3). The result in *Example (2)* would be the same if L_1 had survived the merger (*i.e.*, L_2 merged into L_1) with A and B owning 40 and 60 percent, respectively, of L_1 stock. L_1's pre-change losses would be accounted for separately and limited under section 382 and the pre-change losses of ^{2} would be accounted for separately under §1.382–2(a)(1)(iii) of this section, but would not be limited under section 382. See §1.382–2(a)(1)(ii) for the treatment of ^{2} following the transaction.

Example (4). The facts are the same as *Example (2)*, except, instead of acquiring ^{1} in a merger, ^{2} acquires all of the ^{1} stock from A on January 1, 1988, solely in exchange for stock representing a 40 percent interest in ^{2}, in a reorganization described in section 368(a)(1)(B). The acquisition of stock by ^{2} is an equity structure shift (as well as an owner shift) with respect to ^{1} that results in an ownership change with respect to ^{1} because the percentage of ^{1} stock owned by B immediately after the reorganization (60 percent, by virtue of B's ownership of ^{2}, through the operation of the constructive ownership rules of paragraph (h) of this section) increases by more than 50 percentage points over the lowest percentage of ^{1} stock owned by B at any time during the testing period (0 percent prior to the reorganization). The acquisition also results in an equity structure shift and an owner shift with respect to ^{2}, but ^{2} incurs no ownership change, because A's stock ownership in ^{2} increased by only 40 percentage points over the percentage of ^{2} stock owned by A prior to the reorganization (0 percent).

(f) *Definitions.* For purposes of this section—

(1) *Loss corporation*—(i) *In General.* See section 382 and §1.382–2(a)(1) for the definition of a loss corporation.

(ii) *End of separate accounting for losses and credits of distributor or transferor loss corporation.* The separate tracking of owner shifts of the stock of an acquiring corporation required by §1.382–2(a)(1)(iii) with respect to the net operating loss carryovers and other attributes described in §1.382–2(a)(1)(ii) ends when a fold-in event occurs. A fold-in event is either an ownership change of the distributor or transferor corporation in connection with, or after, the transaction to which section 381(a) applies, or a period of 5 consecutive years following the section 381(a) transaction during which the distributor or transferor corporation has not had an ownership change. Starting on the day after the earlier of the change date (but not earlier than the day of the section 381(a) transaction) or the last day of the 5 consecutive year period, the losses and other attributes of the distributor or transferor corporation are treated as losses and attributes of the acquiring corporation for purposes of determining whether an ownership change occurs with respect to such losses. Also, for purposes of determining the beginning of the acquiring corporation's testing period, such losses are considered to arise either in a taxable year that begins not earlier than the later of the day following the change date or the day of the section 381(a) transaction, or in a taxable year that begins 3 years before the end of the 5 consecutive year period. Pre-change losses of a distributor or transferor corporation that are subject to a limitation under section 382 continue to be subject to the limitation notwithstanding the occurrence of a fold-in event. Any ownership change that occurs in connection with, or subsequent to, the section 381 transaction may result in an additional, lesser limitation with respect to such pre-change losses. This paragraph (f)(1)(ii) applies to any testing date occurring on or after January 29, 1991.

(iii) *Application to other successor corporations.* Section 1.382–2(a)(1) (relating to the definition of loss corporation) and this paragraph (f)(1) also apply, as the context may require, to successor corporations other than successors in section 381(a) transactions. For example, if a corporation receives assets from the loss corporation that have basis in excess of value, the recipient corporation's basis for the assets is determined, directly or indirectly, in whole or in part, by reference to the loss corporation's basis, and the amount by which basis exceeds value is material, the recipient corporation is a successor corporation subject to §1.382–2(a)(1) and this paragraph (f)(1). This paragraph (f)(1)(iii) applies to any testing date occurring on or after January 1, 1997.

(2) *Old loss corporation.* The term *old loss corporation* means any corporation with respect to which there is an ownership change and that was a loss corporation immediately before the ownership change.

(3) *New loss corporation*. The term *new loss corporation* means a corporation with respect to which there is an ownership change if, immediately after such change, it is a loss corporation. A successor corporation to the corporation described in the preceding sentence also is a new loss corporation.

(4) *Successor corporation*. A successor corporation is a distributee or transferee corporation that succeeds to and takes into account items described in section 381(c) from a corporation as the result of an acquisition of assets described in section 381(a). A successor corporation also includes, as the context may require, a corporation which receives an asset or assets from another corporation if the corporation's basis for the asset(s) is determined, directly or indirectly, in whole or in part, by reference to the other corporation's basis and the amount by which basis differs from value is, in the aggregate, material. The previous sentence of this paragraph (f)(4) applies to any testing date occurring on or after January 1, 1997.

(5) *Predecessor corporation*. A predecessor corporation is a distributor or transferor corporation that distributes or transfers its assets to an acquiring corporation in a transaction described in section 381(a). A predecessor corporation also includes, as the context may require, a corporation which transfers an asset or assets to another corporation if the transferee's basis for the asset(s) is determined, directly or indirectly, in whole or in part, by reference to the corporation's basis and the amount by which basis differs from value is, in the aggregate, material. The previous sentence of this paragraph (f)(5) applies to any testing date occurring on or after January 1, 1997.

(6) *Shift*. As the context may require, a shift means an equity structure shift, an owner shift or both.

(7) *Entity*. See § 1.382–3(a)(1) for the definition of an entity.

(8) *Direct ownership interest*. A *direct ownership interest* means the interest a person owns in an entity, including a loss corporation, without regard to the constructive ownership rules of paragraph (h) of this section.

(9) *First tier entity*. A first tier entity is an entity that, at any time during the testing period, owns a five percent or more direct ownership interest in the loss corporation.

(10) *5-percent owner*. A 5-percent owner is any individual that, at any time during the testing period, owns a five percent or more direct ownership interest in a first tier entity or a higher tier entity. See paragraph (g) of this section for rules to determine whether, as a result of the constructive ownership rules of paragraph (h) of this section, a 5-percent owner is a 5-percent shareholder.

(11) *Public shareholder*. A public shareholder is any individual, entity, or other person with a direct ownership interest in a loss corporation of less than five percent at all times during the testing period.

(12) *Public owner*. A public owner is any individual, entity, or other person that, at all times during the testing period, owns less than a five percent direct ownership interest in a first tier entity or any higher tier entity.

(13) *Public group*. A public group is a group of individuals, entities, or other persons each of whom owns, directly or constructively, less than five percent of the loss corporation. See paragraphs (g) and (j) of this section for the rules applicable to identify public groups and to determine whether a public group is a 5-percent shareholder.

(14) *Higher tier entity*. A higher tier entity is any entity that, at any time during the testing period, owns a five percent or more direct ownership interest in a first tier entity or in any higher tier entity.

(15) *Indirect ownership interest*. An indirect ownership is an interest a person owns in an entity determined solely as a result of the application of the constructive ownership rules of paragraph (h) of this section and without regard to any direct ownership interest (or other beneficial ownership interest) in the entity.

(16) *Highest tier entity*. A highest tier entity is a first tier entity or a higher tier entity that is not owned, in whole or in part, at any time during the testing period by a higher tier entity.

(17) *Next lower tier entity*. The next lower tier entity with respect to a first tier entity is the loss corporation. The next lower tier entity with respect to a

higher tier entity is any first tier entity or other higher tier entity in which the higher tier entity owns, at any time during the testing period, a five percent or more direct ownership interest.

(18) *Stock*—(i) *In general.* For further guidance, see § 1.382–2(a)(3)(i).

(ii) *Treating stock as not stock.* Any ownership interest that otherwise would be treated as stock under paragraph (f)(18)(i) of this section shall not be treated as stock if—

(A) As of the time of its issuance or transfer to (or by) a 5-percent shareholder, the likely participation of such interest in future corporate growth is disproportionately small when compared to the value of such stock as a proportion of the total value of the outstanding stock of the corporation,

(B) Treating the interest as not constituting stock would result in an ownership change, and

(C) The amount of the pre-change loss (determined as if the testing date were the change and treating the amount of any net unrealized built-in loss as a pre-change loss) is more than twice the amount determined by multiplying

(*1*) the value of the loss corporation (as determined under section 382(e)) on the testing date, by

(*2*) the long-term tax exempt rate (as defined in section 382(f)) for the calendar month in which the testing date occurs.

Stock that is not treated as stock under this paragraph (f)(18)(ii), however, is taken into account for purposes of determining the value of the loss corporation under section 382(e).

(iii) *Treating interests not constituting stock as stock.* Any ownership interest that would not be treated as stock under paragraph (f)(18)(i) of this section (other than an option that is subject to paragraph (h)(4) of this section) shall be treated as constituting stock if—

(A) As of the time of its issuance or transfer to (or by) a 5-percent shareholder (or a person who would be a 5-percent shareholder if the interest not constituting stock were treated as stock), such interest offers a potential significant participation in the growth of the corporation,

(B) Treating the interest as constituting stock would result in an ownership change, and

(C) The amount of the pre-change losses (determined as if the testing date were the change date and treating the amount of any net unrealized built-in loss as a pre-change loss) is more than twice the amount determined by multiplying

(*1*) The value of the loss corporation (as determined under section 382(e)) on the testing date, by

(*2*) The long-term tax exempt rate (as defined in section 382(f)) for the calendar month in which the testing date occurs.

An ownership interest is that treated as stock under this paragraph (f)(18)(iii) is taken into account for purposes of determining the value of the loss corporation under section 382(e). See § 1.382–4(d)(12) for rules that apply with respect to options and this paragraph (f)(18)(iii).

(iv) *Stock of the loss corporation.* The *stock of the loss corporation* means stock of such corporation within the meaning of this paragraph (f)(18) and, as the context may require, includes any indirect ownership interest in the loss corporation.

(19) *Change date.* The *change date* means the date on which a shift (or any other transaction described in paragraph (a)(2)(i) of this section) that is the last component of an ownership change occurs.

(20) *Year.* A *year*, or any multiple thereof, means a 365-day period (or a 366-day period in the case of a leap year), or any multiple thereof, unless the year is specifically identified as a taxable year.

(21) *Old section 382.* ''Old section 382'' means section 382, as in effect prior to the effective date of section 382 in the Tax Reform Act of 1986 (the ''Act''), but taking into account section 621(f)(2) of the Act.

(22) *Pre-change loss.* See section 382 and § 1.382–2(a)(2) for the definition of pre-change loss.

(23) *Unrelated.* Any two persons are unrelated if the constructive ownership rules of paragraph (h) of this section do not apply to treat either person as owning stock that is owned, directly or constructively, by the other person.

(24) *Percentage ownership interest.* A person's percentage ownership interest in—

(i) A corporation shall be determined under the rules of this section that are applicable to the determination of a shareholder's percentage stock ownership interest in a loss corporation (see paragraphs (f)(18)(i) through (iii) of this section),

(ii) A partnership shall be equal to the relative fair market value of such person's partnership interest to the total fair market value of all outstanding partnership interests, determined without regard to any limited and preferred partnership interest that is described in paragraph (h)(2)(ii)(C) of this section,

(iii) A trust shall be determined in accordance with the principles of section 318(a)(2)(B) for determining the constructive ownership of stock,

(iv) An estate shall be determined in accordance with the principles of section 318(a)(2)(A) for determining the constructive ownership of stock, and

(v) All other entities shall be determined by reference to the person's relative economic interest in the entity, taking into account all of the relevant facts and circumstances.

(g) *5-percent shareholder*—(1) *In general.* Subject to the rules of paragraphs (k)(2) and (4) of this section, the term *5-percent shareholder* means—

(i) An individual that owns, at any time during the testing period,

(A) A direct ownership interest in the stock of the loss corporation of five percent or more or

(B) An indirect ownership interest in the stock of the loss corporation of five percent or more by virtue of an ownership interest in any one first tier entity or higher tier entity,

(ii) A public group, of either a first tier entity or a higher tier entity, identified as a 5-percent shareholder under paragraph (j)(1)(iv)(A) or (B) of this section,

(iii) A public group of the loss corporation identified as a 5-percent shareholder under paragraph (j)(1)(iv)(C) of this section, and

(iv) A public group, of the loss corporation, a first tier entity or a higher tier entity, identified as a 5-percent shareholder under paragraph (j)(2) or (3) of this section. An individual owning five percent or more of the stock of the loss corporation at any time during the testing period is a 5-percent shareholder notwithstanding that the individual may own less than five percent of the stock of the loss corporation on the testing date. See paragraph (g)(5)(i)(B) of this section for rules permitting a loss corporation to make an adjustment in cases described in the preceding sentence.

(2) *Determination of whether a person is a 5-percent shareholder.* Except as provided in paragraphs (k)(2) and (4) of this section, a person shall be treated as constructively owning stock of the loss corporation pursuant to paragraph (h)(2) of this section only if the loss corporation stock is attributed to such person in the person's capacity as a higher tier entity or a 5-percent owner of the first tier entity or higher tier entity from which such stock is attributed. See paragraph (k)(3) of this section for rules explaining the extent of the obligation of the loss corporation to determine the identity of its 5-percent shareholders. Nothing in this paragraph (g)(2), however, shall limit the attribution of loss corporation stock under section 318(a)(2) and paragraph (h) of this section to a public owner.

(3) *Determination of the percentage stock ownership interest of a 5-percent shareholder.* Subject to the rules of paragraphs (k)(2) and (4) of this section, in determining a 5-percent shareholder's percentage ownership interest in the loss corporation, the shareholder's direct ownership interest, if any, and each indirect ownership interest that he may have in the loss corporation in his capacity as a 5-percent owner of any one first tier entity or higher tier entity, if any, are required to be added together and taken into account with respect to such shareholder only to the extent that each such direct or indirect ownership interest constitutes five percent or more of the stock of the loss corporation.

(4) *Examples.*

Example (1) (i) Twenty percent of L stock is owned by A, 10 percent is owned by P_1, 20 percent is owned by E, a joint venture, and the remaining 50 percent of L stock is owned by Public L. P_1 is owned 15 percent by B and

85 percent by Public P_1. E is owned 30 percent by P_2 and 70 percent by P_3, which, in turn, are owned by Public P_2 and Public P_3, respectively.

(ii) The ownership structure of L is illustrated by the following chart:

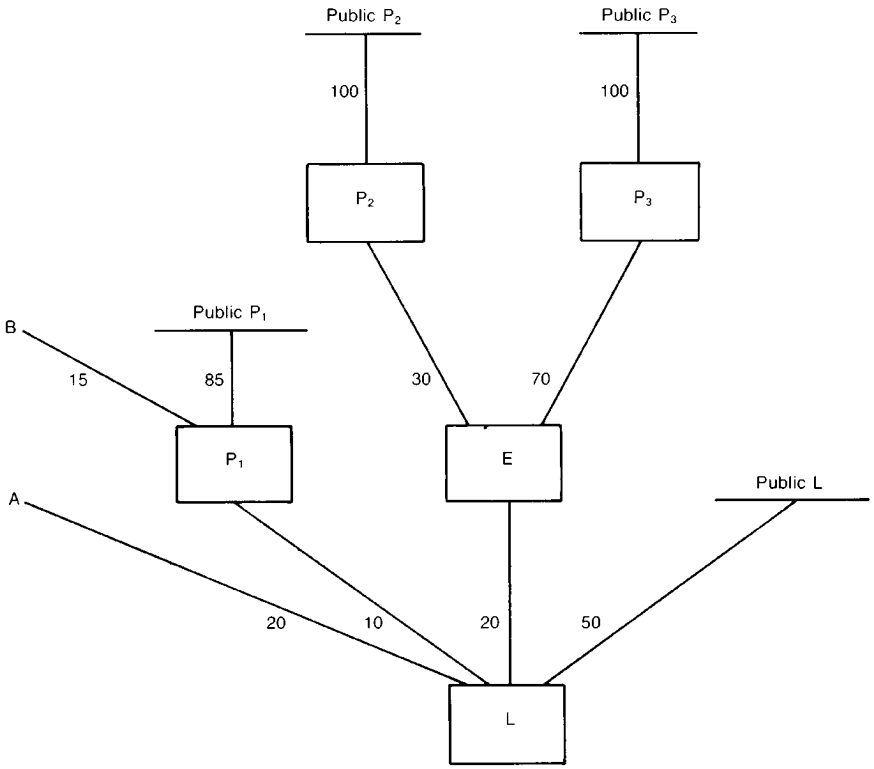

(iii) P_1 and E, each of which has a direct ownership interest in L of five percent or more, are first tier entities. The shareholders with direct ownership interests in L who individually own less than five percent of L are public shareholders (Public L). B, who has a direct ownership interest of five percent or more in P_1, is a 5-percent owner of P . P_2 and P_3, and P_3, each of which has a direct ownership interest in a first tier entity (E) of five percent or more, are higher tier entities with respect to L and, because neither entity is owned at any time during the testing period by a higher tier entity, they also are highest tier entities. The shareholders of P_2 and P_3 (Public P_2 and Public P_3, respectively) are public owners of such entities, because none of those shareholders own five percent or more of either entity at any time during the testing period.

(iv) A, who has a 20 percent direct ownership interest in L, is a 5-percent shareholder of L. Because, by application of the constructive ownership rules of paragraph (h) of this section, B owns only 1.5 percent of L stock in his capacity as a 5-percent owner of P_1 (15 percent ownership of $P_1 \times 10$ percent ownership of L), B is not a 5-percent shareholder of L, even though he is a 5-percent owner of P_1. Under the rules of paragraph (j) of this section, therefore, B is treated as a member of Public P_1. See *Example (3)* of paragraph (j)(1)(vi) of this section for a determination of which public owners and public shareholders constitute public groups that are treated as 5-percent shareholders of L.

Example (2) (i) The facts are the same as in *Example (1)*, except that P_3 is owned 60 percent by C, 30 percent by P_4, and 10 percent by Public P_3. The stock of P_4 is owned by a

group of persons (Public P_4), none of whom own five percent or more of the stock of P_4.

(ii) The ownership structure of L is illustrated by the following chart:

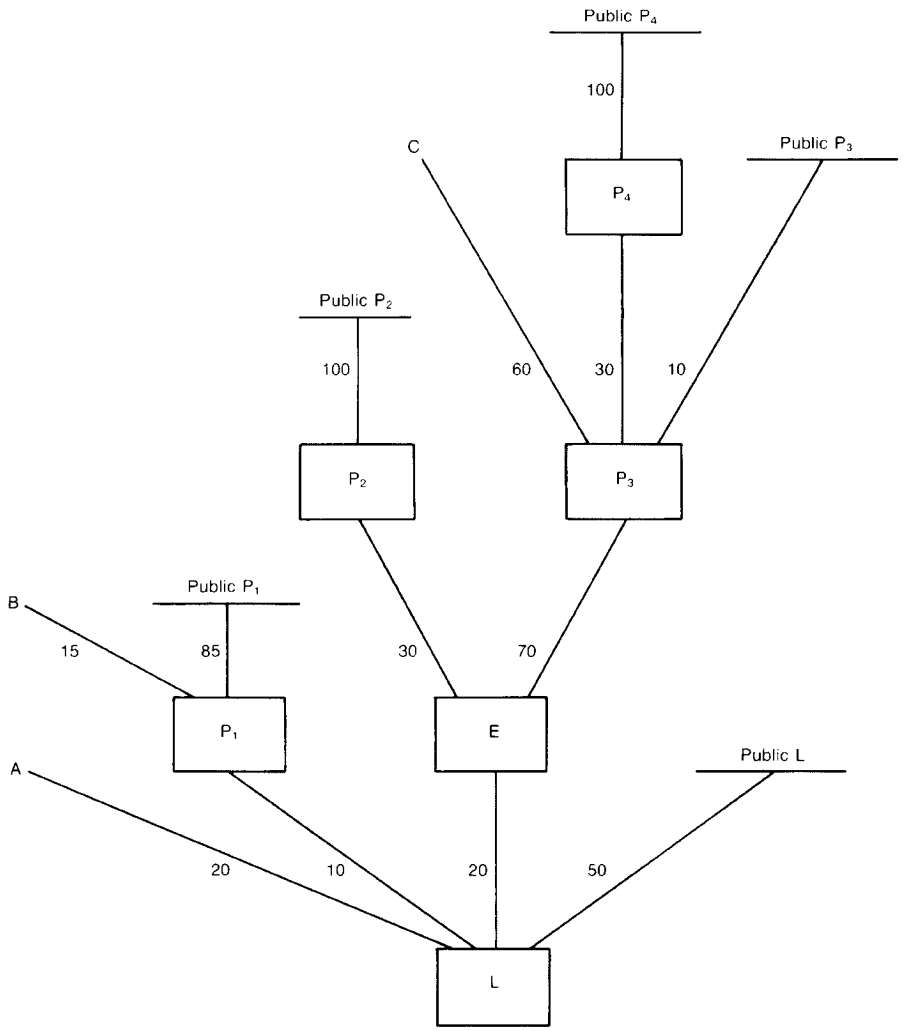

(iii) The defined terms are the same as in *Example (1)*, except that P_3 is a higher tier entity, not a highest tier entity, because five percent or more of P_3 is, in turn, owned by another entity (P_4). P_4, which owns five percent or more of a higher tier entity (P_3), also is a higher tier entity and, because it is not owned at any time during any testing period by any entity that is also a higher tier entity, P_4 is a highest tier entity. All of the shareholders of P_4, none of which own a direct ownership interest of five percent or more in P_4, are public owners of P_4.

(iv) C is a 5-percent owner of P_3 and, under the constructive ownership rules of paragraph (h) of this section, C indirectly owns 8.4 percent of L ([60 percent ownership of P_3] × [70 percent ownership of E] × [20 percent ownership of L]), in his capacity as a 5-percent owner of P_3. B is a 5-percent owner of P_1 and, under the constructive ownership rules of paragraph (h) of his section, B owns 1.5

percent of L ([15 percent ownership of P_1] × [10 percent ownership of L]) in his capacity as a 5-percent owner of P_1. Therefore, C is a 5-percent shareholder of L, but B is not a 5-percent shareholder of L, even though he is a 5-percent owner of P_1. See *Example (4)* of paragraph (j)(1)(vi) of this section for a determination of which public owners and public shareholders constitute public groups that are treated as separate 5-percent shareholders of L.

Example (3) (i) L is owned 30 percent by A and 70 percent by P. A owns six percent of P stock and the balance (94 percent) is owned equally by 500 unrelated shareholders (''Public P'').

(ii) A is a 5-percent shareholder because he directly owns 30 percent of L. Even though A is a 5-percent owner of P, A's 4.2 percent indirect ownership interest in L (six percent ownership interest in P × P's 70 percent ownership of L) is generally not taken into account in determining A's ownership interest, because such indirect ownership interest is less than five percent. Instead, A's 4.2 percent indirect interest is treated under paragraph (j)(1)(iv) of this section as owned by Public P. If, however, L has actual knowledge of A's less-than-five-percent indirect ownership interest in L and is thus subject to paragraph (k)(2) of this section, or paragraph (k)(4) of this section otherwise applies, L must take A's total 34.2 percent ownership interest into account in determining A's percentage ownership in L.

Example (4). The facts are the same as in *Example (3),* except that A owns ten percent of P's stock. Because A's indirect ownership interest in L in his capacity as a 5-percent owner of P is five percent or more, both A's 30 percent direct ownership interest in L and his seven percent indirect ownership interest in L (10 percent ownership interest in P × P's 70 percent ownership of L) are taken into account in determining his ownership interest in L, without regard to L's actual knowledge or whether paragraph (k)(4) of this section applies.

Example 5— See § 1.382–3(a)(1)(ii) for additional examples with respect to the definition of an entity.

(5) *Stock ownership presumptions in connection with certain acquisitions, and dispositions of loss corporation stock*—(i) *In general.* For purposes of this section—

(A) If an individual owns less than five percent of the stock of a loss corporation during the testing period (excluding the testing date) and acquires an amount of such stock so that the individual becomes a 5-percent shareholder on the testing date, the loss corporation may treat any interest in the loss corporation owned by such individual prior to that acquisition as owned by a public group during the period of such individual's ownership of that interest and as not owned by the 5-percent shareholder during the same period, and

(B) If a 5-percent shareholder's percentage ownership interest in the loss corporation is reduced to less than five percent, the loss corporation may presume that the remaining stock owned by such 5-percent shareholder immediately after such reduction is the stock owned by such shareholder for each subsequent testing date having a testing period that includes the date on which the reduction occurred as long as such shareholder continues to own less than five percent of the stock of the loss corporation. In that event, such ownership interest shall be treated as owned by a separate public group for purposes of the rules of paragraph (j)(2)(vi) of this section.

(ii) *Example.*

L has 100,000 shares of stock outstanding. All of the L stock is owned equally by 40 unrelated, individual shareholders, including A (who owns 2.5 percent of L stock). Because no person owns as much as five percent of L stock, Public L is the only 5-percent shareholder of L. See paragraph (j)(1) of this section. A purchases 5,000 shares of L stock over a public stock exchange on June 8, 1989. The purchase is an owner shift. When added to his ownership interest before that date (the testing date), A owns 7,500 shares of L stock (7.5 percent). Under paragraph (g)(5)(i)(A) of this section, L may treat A and Public L as having owned 0 percent and 100 percent, respectively, at all times prior to June 8, 1989 (rather than having owned 2.5 percent by A and 97.5 percent by Public L, even if L has actual knowledge of A's less than five percent ownership interest). The increase in A's stock ownership of L as of June 8, 1989 thus would be 7.5 percentage points, rather than 5.0 percentage points, for purposes of determining whether an ownership change occurs on that testing date and any subsequent testing date.

(h) *Constructive ownership of stock*—(1) *In general.* Subject to certain modifications set forth in this section and section 382(l)(3), the constructive ownership rules of section 318(a) generally apply for purposes of determining ownership of loss corporation stock.

(2) *Attribution from corporations, partnerships, estates and trusts*—(i) *In general.* Stock owned (directly or indirectly) by an entity shall be attributed to its owners—

(A) Except as otherwise provided in this section, and solely for the purposes of determining whether a loss corporation has an ownership change by treating the stock attributed pursuant to section 318(a)(2) as no longer being owned by the entity from which it is attributed, and

(B) If attribution is from a corporation, without regard to the 50 percent stock ownership limitation contained in section 318(a)(2)(C).

(ii) *Limitation on attribution from entities with respect to certain interests.* Section 318(a)(2) shall not apply to treat the stock of the loss corporation that is owned directly by a first tier entity (or indirectly by any higher tier entity) as being indirectly owned by any person that has an ownership interest in the first tier entity (or any higher tier entity) to the extent that such interest is (or is attributable to)—

(A) Stock of any such entity that is described in section 1504(a)(4),

(B) Any ownership interest in any such entity that does not constitute stock under paragraph (f)(18)(ii) of this section, or

(C) If the entity is not a corporation, any ownership interest in any such entity that has characteristics similar to the interests described in paragraph (h)(2)(ii)(A) or (B) of this section.

The ownership interests described in this paragraph (h)(2)(ii) shall not be taken into account in determining a person's percentage ownership interest in an entity under paragraph (f)(24) of this section.

(iii) *Limitation on attribution from certain entities.* For purposes of this section, except as provided in paragraphs (k)(2) and (4) of this section, each of the following shall be treated as an individual who is unrelated to any other owner (direct or indirect) of the loss corporation—

(A) Any entity other than a higher tier entity that owns five percent or more of the loss corporation stock (determined without regard to paragraph (h)(2)(i)(A) of this section) on a testing date, a first tier entity or the loss corporation,

(B) A qualified trust described in section 401(a),

(C) Any State, any possession of the United States, the District of Columbia, the United States (or any agency or instrumentality thereof), any foreign government, or any political subdivision of any of the foregoing, and

(D) Any other person designated by the Internal Revenue Service in the Internal Revenue Bulletin.

Stock of a loss corporation that is owned by any such person shall thus not be attributed to any other person for purposes of this section. See paragraph (g)(2) of this section limiting attribution from a first tier entity or a higher tier entity to any person that is not a 5-percent owner or a higher tier entity.

(iv) *Examples.*

Example (1). All the stock of L is owned by A. B and C respectively own 70 and 30 percent of the outstanding P stock. P acquires 60 percent of the outstanding L stock from A on July 1, 1988 (a testing date). After the acquisition, P is a first tier entity and a higher tier entity of L. B and C are each 5-percent owners of P and also are 5-percent shareholders of L having a 42 percent and 18 percent stock ownership interest in L, respectively, through the operation of the constructive ownership rules of paragraph (h) of this section. Because B and C together have increased their ownership in L by more than 50 percentage points during the testing period ending on the testing date (60 percent on the testing date and 0 percent prior thereto), an ownership change occurs with respect to L on July 1, 1988.

Example (2). The facts are the same as in *Example (1)*, except that B and C are not shareholders in a corporation, but instead are partners in a general partnership, E. B and C respectively own 70 percent and 30 percent of E. E acquires 60 percent of the L stock on July 1, 1988. The results are the same as in *Example (1)*.

Example (3). The facts are the same as in *Example (1)*, except that the acquisition is accomplished in a transaction that qualifies under section 351(a). In that transaction, HC is formed through (i) a contribution of money by P in exchange for 60 shares of HC common stock and (ii) a contribution of all the outstanding shares of L stock plus cash by A in exchange for 40 shares of HC common stock and 30 shares of HC preferred stock that is described in section 1504(a)(4). The respective values of each share of HC stock, common and preferred, are equal. The stock

of L is attributed to A through his interest in HC common stock, but not through his interest in HC preferred stock (see paragraph (h)(2)(ii)(A) of this section). Thus, A is treated as owning indirectly only 40 percent of L. B and C are 5-percent shareholders of L having indirect ownership interests in L of 42 percent and 18 percent, respectively, through their ownership of HC common stock. The results are therefore the same as in *Example (1)*.

(3) *Attribution to corporations, partnerships, estates and trusts.* Except as otherwise provided by regulation under section 382 or by the Internal Revenue Service in the Internal Revenue Bulletin, the rules of section 318(a)(3) shall not apply in determining the ownership of stock under this section.

(4) *Option attribution*—(i) *In general.* Solely for the purpose of determining whether there is an ownership change on any testing date, stock of the loss corporation that is subject to an option shall be treated as acquired on any such date, pursuant to an exercise of the option by its owner on that date, if such deemed exercise would result in an ownership change. The preceding sentence shall be applied separately with respect to—

(A) Each class of options (*i.e.*, options with terms that are identical, issued by the same issuer, and issued on the same date) owned by each 5-percent shareholder (or person who would be a 5-percent shareholder if the option were treated as exercised), and

(B) Each 5-percent shareholder, each owner of an option who would be a 5-percent shareholder if the option were treated as exercised, and each combination of such persons.

(ii) *Examples.*

Example (*1*)(*i*) A owns all of the 100 shares of outstanding L stock. A grants options for the purchase of his L stock, exercisable for 10 years from the date of issuance, in the following transactions: An option to B for four shares (issued January 1, 1988), an option to C for six shares (issued June 1, 1989), and an option to D for 15 shares (issued July 30, 1989). On July 30, 1990, A sells 41 shares of his L stock to BB.

(*ii*) Pursuant to paragraph (a)(2)(i) of this section, the date on which each option is acquired is a testing date. The issuance of options to acquire L stock to each of B, C, and D is not treated as an acquisition of the underlying stock on any such testing date since such treatment with respect to any one of the option owners (or any combination thereof) would not have resulted in an ownership change on any of those testing dates.

(*iii*) The date on which BB acquires 41 shares also is a testing date. BB's acquisition of 41 percent of the L stock, taken together with the shift in ownership that would result if the options held by B, C and D were exercised, would result in an ownership change, because the stock owned or treated as owned by Public L (a group including only B, the sole shareholder who owns less than five percent of L stock), C, D and BB would have increased by 66 percentage points (four, six, 15, and 41 percentage points, respectively) during the testing period. Subject to paragraph (h)(4)(ix) of this section, the options are treated as exercised and an ownership change occurs on July 30, 1990, pursuant to paragraph (h)(4)(i) of this section. Accordingly, no new testing period can begin before July 31, 1990. Under paragraph (h)(4)(x)(F) of this section, the option attribution rules of paragraph (h)(4)(i) of this section shall not be applicable with respect to any of the options owned by B, C, and D immediately before the ownership change until such time, if any, that such options are transferred to (or by) 5-percent shareholder (or a person who would be a 5-percent shareholder if such option were exercised). In addition, the subsequent exercise of any of those options by A, B, or C (the persons owning such options immediately before the ownership change) is disregarded. See paragraph (h)(4)(vi) of this section. Also see paragraph (h)(4)(viii) of this section for the treatment of options that lapse or are forfeited.

(*iv*) The facts are the same as in (*i*), except that the sale of A's 41 shares of L stock to BB occurs on July 30, 1995. Because the options are treated as exercised and the related stock is treated as acquired on the July 30, 1995 testing date, the results are the same as described in (*iii*).

Example (2) (*i*) A owns all of the outstanding 100 shares of the stock of L. On July 22, 1988, the value of A's stock in L is $500 and the following agreements are entered into: (i) A sells 40 shares of his L stock to B for $200, (ii) in exchange for $10, A grants B an option to acquire the balance of his L stock for $305 at any time before July 22, 1992, and (iii) L grants A an option to acquire 100 shares of L stock at a price of $600 exercisable until such time as B's option is no longer outstanding.

(*ii*) If the stock subject to the options owned by both A and B were treated as acquired on the July 22, 1988 testing date, B would have increased his ownership interest in L by only 50 percentage points to 50 percent ([40 shares purchased + 60 shares acquired pursuant to the option]/200 outstanding shares of L stock, including 100 shares deemed outstanding pursuant to the option issued to A by L) as compared with 0 percent

prior to July 22, 1988. In determining whether the options with respect to the stock of L would, if exercised, result in an ownership change, paragraph (h)(4)(i)(B) of this section requires that such options be treated as exercised separately with respect to each 5-percent shareholder, each person who would be a 5-percent shareholder if the option were treated as exercised or each combination of such persons. Therefore, by treating the option owned by A as not having been exercised and the option owned by B as having been exercised, B's interest in L increases by 100 percentage points during the testing period. An ownership change with respect to L therefore results from the transactions occurring on July 22, 1988.

(iii) *Contingencies.* Except as provided in paragraph (h)(4)(x)(D) of this section, the extent to which an option is contingent or otherwise not currently exercisable shall be disregarded for purposes of this section.

(iv) *Series of options.* For purposes of this section, an option to acquire an option with respect to the stock of the loss corporation, and each one of a series of such options, shall be considered as an option to acquire such stock.

(v) *Interests that are similar to options.* For purposes of this section,

(A) An interest that is similar to an option includes, but is not limited to, a warrant, a convertible debt instrument, an instrument other than debt that is convertible into stock, a put, a stock interest subject to risk of forfeiture, and a contract to acquire or sell stock, and

(B) Any such interest shall be treated as an option.

(vi) *Actual exercise of options*—(A) *In general.* The actual exercise of any option in existence immediately before and after an ownership change, whether or not the option was treated as exercised in connection with the ownership change under paragraph (h)(4)(i) of this section, shall be disregarded for purposes of this section, but only if the option is exercised by the 5-percent shareholder (or person who would have been a 5-percent shareholder if the options owned by such person had been exercised immediately before the ownership change) who owned the option immediately before and after such ownership change.

(B) *Actual exercise within 120 days of deemed exercise.* If the actual exercise of an option occurs on or before the end of the period which is 120 days after the date on which the option is treated as exercised under paragraph (h)(4)(i) of this section, the loss corporation may elect to treat paragraphs (h)(4)(i) and (vi)(A) of this section as not applying to such option and take into account only the acquisition of loss corporation stock resulting from the actual exercise of the option. An election under this paragraph (h)(4)(vi)(B) shall have no effect on the determination of whether an ownership change occurs, but shall apply only for the purpose of determining the date on which the change date occurs. An election under this paragraph (h)(4)(vi)(B) shall be made in the statement described in paragraph (a)(2)(ii) of this section.

(vii) *Effect of deemed exercise of options on the outstanding stock of the loss corporation*—(A) *Right or obligation to issue stock.* Solely for purposes of determining whether an ownership change has occurred under paragraph (h)(4)(i) of this section, the deemed exercise of an option with respect to unissued stock (or treasury stock) of a corporation shall result in a corresponding increase in the amount of its total outstanding stock.

(B) *Right or obligation to acquire outstanding stock by the loss corporation.* Solely for purposes of determining whether an ownership change has occurred under paragraph (h)(4)(i) of this section, the deemed exercise of a right to transfer outstanding stock to the issuing corporation (or a right of the issuing corporation to acquire its stock) shall result in a corresponding decrease in the amount of its total outstanding stock.

(C) *Effect on value of old loss corporation.* The deemed exercise of an option with respect to unissued stock (or treasury stock) under paragraph (h)(4)(i) of this section shall have no effect on the determination of the value of the old loss corporation and the computation of the section 382 limitation. See section 382(l)(1)(B) disregarding capital contributions made during the two-year period preceding the change date for purposes of computing the section 382 limitation.

(viii) *Options that lapse or are forfeited.* If an option that is treated as exercised under paragraph (h)(4)(i) of this

section lapses unexercised or the owner of such option irrevocably forfeits his right to acquire stock pursuant to the option, the option shall be treated for purposes of this section as if it never had been issued. In that case, the loss corporation may file an amended return for prior years (subject to any applicable statute of limitations) if the section 382 limitation was thus inapplicable. If paragraph (h)(4)(i) of this section applied to an option (or options) with respect to a taxable year for which an income tax return has not been filed by the date that the option (or options) lapses or is irrevocably forfeited, the loss corporation may treat paragraph (h)(4)(i) of this section as inapplicable to such option (or options).

(ix) *Option rule inapplicable if pre-change losses are de minimis.* Paragraph (h)(4)(i) of this section shall not apply to treat the stock of the loss corporation as acquired by the owner of an option if, on a testing date, the amount of pre-change losses (determined as if the testing date were a change date and treating the amount of any net unrealized built-in loss as a pre-change loss) is less than twice the amount determined by multiplying.

(A) The value of the loss corporation (as determined under section 382(e)) on the testing date, by

(B) The long-term tax exempt rate (as defined in section 382(f)) for the calendar month in which the testing date occurs.

(x) *Options not subject to attribution.* Paragraph (h)(4)(i) of this section shall not apply to—

(A) *Long-held options with respect to actively traded stock.* Any option with respect to stock of the loss corporation which stock is actively traded on an established securities market (within the meaning of section 1273(b)) for which market quotations are readily available, if such option has been continuously owned by the same 5-percent shareholder (or a person who would be a 5-percent shareholder if such option were exercised) for at least three years, but only until the earlier of such time as—

(*1*) The option is transferred by or to a 5-percent shareholder (or a person who would be a 5-percent shareholder if such option were exercised), or

(*2*) The fair market value of the stock that is subject to the option exceeds the exercise price for such stock on the testing date. For purposes of this paragraph (h)(4)(x)(A), options with respect to the stock of a loss corporation that are assumed (or substituted) in a reorganization and converted into options with respect to the stock of another party to the reorganization shall not be treated as transferred, provided that there are no changes in the terms of the options, other than that the stock that may be acquired pursuant to the option is that of another party to the reorganization and that the amount of stock subject to the option is adjusted only to reflect the exchange ratio for the exchange of stock of the loss corporation in the reorganization.

(B) *Right to receive or obligation to issue a fixed dollar amount of value of stock upon maturity of certain debt.* Any right to receive or obligation to issue stock pursuant to the terms of a debt instrument that, in economic terms, is equivalent to nonconvertible debt because the right to receive stock of the issuer of a fixed dollar amount is based upon the fair market value for such stock determined at or about the date the stock is transferred pursuant to such right or obligation (*i.e.,* the amount of the stock transferred pursuant to the option is equal to a fixed dollar amount, divided by the value of each share of such stock at or about the date of the stock transfer). This paragraph (h)(4)(x)(B) shall not apply if the method for determining the fair market value of the stock of the issuer is intended to or, in fact, provides the owner of the debt instrument with a participation in any appreciation of any stock of the issuer.

(C) *Right or obligation to redeem stock of the loss corporation.* Any right or obligation of the loss corporation to redeem any of its stock at the time such stock is issued, but only to the extent such stock is issued to persons who are not 5-percent shareholders immediately before the issuance.

(D) *Options exercisable only upon death, disability or mental incompetency.* Any option entered into between owners of the same entity (or an owner and the entity in which the owner has a direct ownership interest) with respect

to such owner's ownership interest in the entity that is exercisable only upon the death, complete disability or mental incompetency of such owner.

(E) *Right to receive or obligation to issue stock as interest or dividends.* Any right to receive or obligation to issue stock of a corporation in payment of interest or dividends by the issuing corporation. (For an example illustrating this exception, see paragraph (j)(2)(iv)(B) of this section.)

(F) *Options outstanding following an ownership change—(1) In general.* Any option in existence immediately before and after an ownership change, whether or not the option was treated as exercised in connection with the ownership change under paragraph (h)(4)(i) of this section, but only so long as the option continues to be owned by the 5-percent shareholder (or person who was treated as a 5-percent shareholder) who owned the option immediately before and after such ownership change.

(*2*) *Example* (*i*) A, B, C and D own all of the outstanding stock of L. A owns 70 shares of L stock and each of B, C and D own 10 shares of L stock. On July 12, 1988, L issues warrants to each of its shareholders entitling them to acquire an additional 8.5 shares of L stock for each share of stock owned.

(*ii*) If B, C and D, but not A, each exercise their respective rights to acquire an additional 85 shares of L stock (10 shares × 8.5 shares that may be acquired for each share owned) on July 12, 1988, their combined ownership interest in L on that date would exceed 80 percent (255 shares deemed to be acquired + 30 shares actually owned)/355 shares outstanding (actual and deemed)). B, C and D thus would increase their ownership interest in L by 50.3 percentage points during the testing period, causing an ownership change, because, under paragraph (h)(4)(i)(B) of this section, the options are treated as exercised if the exercise would cause an ownership change.

(*iii*) Following the ownership change, paragraph (h)(4)(i) of this section applies to prevent A's right to acquire 595 shares of L stock (70 shares x 8.5 shares that may be acquired for each share owned) or the rights held by B, C, or D, to be treated as exercised on any subsequent testing date, except to the extent that those rights are transferred. To the extent any of those options are transferred following the ownership change, paragraph (h)(4)(i) of this section will apply to any such options on the date of the transfer and on any subsequent testing date.

(G) *Right to acquire loss corporation stock pursuant to a default under a loan agreement.* Any right to acquire stock of a corporation by a bank (as that term is defined in section 581), an insurance company (as that term is defined in § 1.801–3(a)), or a trust qualified under section 401(a) solely as the result of a default under a loan agreement entered into in the ordinary course of the trade or business of such bank, life insurance company or qualified trust.

(H) *Agreement to acquire or sell stock owned by certain shareholders upon retirement.* Any option entered into between noncorporate owners of the same entity (or a noncorporate owner and the entity in which the owner has a direct ownership interest) with respect to such owner's ownership interest in the entity, but only if each of such owners actively participate in the management of the entity's trade or business, the option is issued at a time that the loss corporation is not a loss corporation and the option is exercisable solely upon the retirement of such owner. An option with terms described in both this paragraph (h)(4)(x)(H) and in paragraph (h)(4)(x)(D) of this section shall also not be subject to paragraph (h)(4)(i) of this section.

(I) [Reserved]

(J) *Title 11 or similar case.* See § 1.382–9(o) which excepts certain options created by or under a plan of reorganization in a title 11 or similar case from the operation of paragraph (h)(4)(i) of this section.

(K)—(Y) [Reserved]

(xi) *Certain transfers of options disregarded.* Transfers of options between persons who are not 5-percent shareholders (and between members of separate public groups resulting from the application of the segregation rules of paragraphs (j)(2) and (3)(iii) of this section) are not taken into account. Transfers of options in any of the circumstances described in section 382(l)(3)(B) are also disregarded and the transferee shall be treated as having owned the option for the period that it was owned by the transferor.

(xii) *Exercise of an option that has not been treated as stock.* The acquisition of stock pursuant to the actual exercise

of an option (other than an option described in paragraph (h)(4)(vi)(A) of this section) shall not be disregarded.

(xiii) *Effective date.* See paragraph (m)(4)(vi) of this section for special rules regarding the effective date of the provisions of this paragraph (h)(4).

(5) *Stock transferred under certain agreements.* Notwithstanding paragraph (h)(4) of this section, no shift results solely because under section 1058(a)—

(i) A shareholder transfers stock of a corporation pursuant to an agreement that meets the requirements of section 1058(b), or

(ii) A person having rights under such an agreement exchanges those rights for stock identical to the stock transferred pursuant to the agreement.

(6) *Family attribution.* For purposes of this section—

(i) Paragraphs (1) and (5)(B) of section 318(a) shall not apply,

(ii) An individual and all members of his family described in section 318(a)(1) shall be treated as one individual,

(iii) Subject to paragraph (k)(2) of this section, paragraph (h)(6)(ii) of this section shall not apply to members of a family who, without regard to that paragraph (h)(6)(ii), would not be 5-percent shareholders, and

(iv) If under paragraph (h)(6)(ii) of this section, an individual may be treated as a member of more than one family, and each family that is treated as one individual is a 5-percent shareholder (or would be treated as a 5-percent shareholder if such individual were treated as a member of such family), then such individual shall be treated only as a member of the family that results in the smallest increase in the total percentage stock ownership of the 5-percent shareholders on the testing date and shall not be treated as the member of any other family.

(i) [Reserved]

(j) *Aggregation and segregation rules.* For purposes of this section, except as provided in paragraphs (k)(2) and (4) of this section—

(1) *Aggregation of public shareholders and public owners into public groups*—(i) *Public group.* Under this paragraph (j), a loss corporation or other entity can be treated as owned, in whole or in part, by one or more public groups. A public group can include public shareholders, public owners, and 5-percent owners who are not 5-percent shareholders of the loss corporation.

(ii) *Treatment of a public group that is a 5-percent shareholder.* Each public group that is treated as a 5-percent shareholder under paragraph (g)(1)(ii), (iii) or (iv) of this section shall be treated as one individual. See paragraph (j)(2)(iv) for a rule combining certain de minimis public groups.

(iii) *Presumption of no cross-ownership.* The public owners, 5-percent owners who are not 5-percent shareholders and public shareholders in any public group, subject to paragraphs (j)(2)(iii), (k)(2) and (k)(4) of this section, are presumed not to be members of any other public group. It also is presumed that each such person is unrelated to all other shareholders (direct and indirect) of the loss corporation. See paragraph (h)(6)(iii) of this section. The members of a public group that exists by virtue of its direct ownership interest in an entity are presumed not to be members (and not to be related to a member) of any other public group that exists at any time by virtue of its direct ownership interest in any other entity. To the extent that the presumptions adopted in this paragraph (j)(1)(iii) are not applicable because the loss corporation has actual knowledge of facts to the contrary and is thus subject to paragraph (k)(2) of this section, public shareholders, public owners and 5-percent owners who are not 5-percent shareholders may be aggregated into additional public groups.

(iv) *Identification of the public groups treated as 5-percent shareholders*—(A) *Analysis of highest tier entities.* The loss corporation must identify first tier entities and higher tier entities in order to identify any highest tier entities that must be identified under paragraph (k)(3) of this section. The loss corporation must then identify any 5-percent owners of each such highest tier entity who indirectly own, at any time during the testing period, five percent or more of the loss corporation through the ownership interest in such highest tier entity. Under paragraph (g)(1)(i)(B) of this section, any such 5-percent owner is a 5-percent shareholder. See paragraph (k)(3) of this section for rules explaining the extent of

the obligation of the loss corporation to determine the identity of its shareholders. Each person who has an ownership interest in any highest tier entity and who is not treated as a 5-percent shareholder (*i.e.,* persons who are public owners or 5-percent owners who are not 5-percent shareholders) is a member of the public group of that highest tier entity. A public group, so identified, that indirectly owns five percent or more of the loss corporation on the testing date is treated under paragraph (g)(1)(ii) of this section as a 5-percent shareholder. If the public group so identified owns less than five percent of the loss corporation on the testing date, such public group is treated as part of the public group of the next lower tier entity.

(B) *Analysis of other higher tier entities and first tier entities.* The analysis and aggregation of public groups described in paragraph (j)(1)(iv)(A) of this section is repeated for any next lower tier entity and successively for any next lower tier entity of any entity described in this paragraph (j)(1)(iv)(B) until applied to each first tier entity.

(C) *Aggregation of the public shareholders.* The public shareholders are aggregated and, under paragraph (g)(1)(iii) of this section, are treated as a public group that is a 5-percent shareholder without regard to whether such group, at any time during the testing period, owns five percent or more of the loss corporation. For this purpose, if the public group of any first tier entity indirectly owns less than five percent of the loss corporation on the testing date, and is thus not treated as a 5-percent shareholder, but is treated as part of the public group of the loss corporation under paragraph (j)(1)(iv)(A) or (B) of this section, the ownership interest of that group is included in the public group of the loss corporation referred to in the preceding sentence.

(v) *Appropriate adjustments.* A loss corporation may apply the principles of paragraph (g)(5) of this section with respect to—

(A) Any public group that is treated as a 5-percent shareholder on the testing date if such public group, at any time during the testing period, was treated as part of the public group of the next lower tier entity, or

(B) Any public group that is treated as part of the public group of a next lower tier entity if such public group, at any time during the testing period, was part of the public group of a higher tier entity that was treated as a 5-percent shareholder and had a direct or indirect ownership interest in such lower tier entity.

(vi) *Examples.*

Example (1) (*i*) All of the stock of L is owned by 1,000 shareholders, none of whom own as much as five percent of L stock (''Public L''). All of the stock of P is owned by 150,000 shareholders, none of whom own as much as five percent of P stock (''Public P''). Between July 12, 1988 and August 13, 1988, P purchases all of the L stock through a series of transactions on the public stock exchange. P's percentage of direct stock ownership in L increases from 4.9 percent to five percent on July 15, 1988, and from 50 percent to 51 percent on July 30, 1988.

(*ii*) Before July 15, 1988, P is a public shareholder of L. On and after July 15, 1988, P is a first tier entity (and a highest tier entity) of L. Accordingly, under the rules of paragraph (j)(1) of this section, Public P, on and after July 15, 1988, is treated as a public group that is a 5-percent shareholder. Each acquisition by P on and after such date affects the percentage of L stock that is owned by Public P and thus constitutes an owner shift.

(*iii*) Immediately after the transaction on July 30, 1988, P owns 51 percent of L stock. Under paragraph (j)(1)(iv)(A) of this section, Public P thus owns 51 percent of L. Under paragraph (j)(1)(iv)(C) of this section, Public L, the public group that includes the public shareholders of L, is treated as a 5-percent shareholder that owns 49 percent of L. Under paragraph (j)(1)(iii) of this section, Public L and Public P are presumed not to have any common members and it is also presumed that no member of either public group is related to any other member of either of the two public groups.

(*iv*) Assuming that the presumption provided in paragraph (j)(1)(iii) of this section (*i.e.,* that no person owns stock in both P and L) is not rebutted to any extent, Public P is treated as a 5-percent shareholder whose stock ownership in L, as of the July 30, 1988 testing date, has increased by 51 percentage points over its lowest percentage of stock ownership in L at any time during the testing period (0 percent prior to July 12, 1988). Accordingly, an ownership change with respect to L occurs as a result of P's acquisition on July 30, 1988. L is thus a new loss corporation and its pre-change losses are subject to limitation under section 382.

Example (2) (*i*) All of the stock of P is owned by 1,000 unrelated shareholders, none

of whom owns as much as five percent of P stock. L_1 is a wholly owned subsidiary of P. On January 2, 1988, P distributes all of the L_1 stock pro rata to its shareholders.

(*ii*) Prior to the stock distribution, the public owners of P are members of a public group (''Public P'') that is treated as a 5-percent shareholder owning 100 percent of the stock of L_1.

See paragraph (j)(1)(iv)(A) of this section. Following the stock distribution to the P shareholders, L_1 is owned by 1,000 public shareholders that are members of a public group (''Public L_1'') that is treated as a 5-percent shareholder owning 100 percent of the stock of L_1. See paragraph (j)(1)(iv)(C) of this section.

(*iii*) Public P and Public L_1 are treated as unrelated, individual 5-percent shareholders under paragraph (j)(1)(iii) of this section. Although the members of one public group are presumed not to be members of any other public group under paragraph (j)(1)(iii) of this section, L_1 has actual knowledge that all of its public shareholders immediately following the distribution (Public L_1) received L_1 stock pro rata in respect to the outstanding P stock and thus were also members of Public P. Applying paragraph (k)(2) of this section, the loss corporation may take into account the identity of ownership interests between Public L_1 and Public P to establish that Public L_1 did not increase its percentage ownership in L_1. Accordingly, the transaction would not constitute an owner shift.

Example (3) (*i*) The facts are the same as in *Example (1)* of paragraph (g)(4) of this section. Thus, 20 percent of L stock is owned by A, 10 percent is owned by P_1, 20 percent is owned by E, a joint venture, and the remaining 50 percent of L stock is owned by Public L. P_1 is owned 15 percent by B and 85 percent by Public P_1. E is owned 30 percent by P_2 and 70 percent by P_3, which are owned by Public P_2 and Public P_3, respectively. See *Example (1)(ii)* of paragraph (g)(4) of this section for a chart illustrating this ownership structure.

(*ii*) The public owners of P_2 and P_3 (Public P_2 and Public P_3, respectively), are public groups that are treated as 5-percent shareholders of L, because each such public group indirectly owns five percent or more of L stock (six percent by Public P_2 [(30 percent ownership of E)×(20 percent ownership of L)] and 14 percent by Public P_3 [(70 percent ownership of E)×(20 percent ownership of L)]). The public owners of P_1 (''Public P_1''), who indirectly own 8.5 percent of L stock [(85 percent ownership of P_1)×(10 percent ownership of L)] and B, who indirectly owns 1.5 percent of L and is thus included in Public P_1 under paragraph (j)(1)(iv)(A) of this section, are members of a public group that is treated as a 5-percent shareholder of L that owns ten percent of L stock. Finally, the public group of L (''Public L'') is a 5-percent shareholder that owns 50 percent of L. Accordingly, A, Public L, Public P_1 (including B), Public P_2, and Public P_3 are the only 5-percent shareholders of L.

Example (4) (*i*) The facts are the same as *Example (3)* above, except that P_3 is owned 60 percent by C, 30 percent by P_4, and 10 percent by P_3. The stock of P_4 is publicly traded and is owned by Public P_4. The facts are thus the same as in *Example (2)* in paragraph (g)(4) of this section. See *Example (2)(ii)* of paragraph (g)(4) of this section for a chart illustrating this ownership structure.

(*ii*) The public owners of P_4 (a highest tier entity) are members of a public group that indirectly owns 4.2 percent of L ([30 percent ownership of P_3]×[70 percent ownership of E]×[20 percent ownership of L]). For purposes of identifying public groups that are 5-.percent shareholders, L is not required to identify P_4 as a highest tier entity under paragraph (k)(3) of this section because P_4 does not own five percent or more of L stock. Moreover, under paragraph (h)(2)(iii) of this section, P_4 generally is treated as an individual from which there is no attribution of loss corporation stock. The public group of P_3 (including P_4) indirectly owns 5.6 percent of L ([40 percent of P_3]×[70 percent ownership of E]×[20 percent of L]), and is thus a 5-percent shareholder of L. The public groups of P_2 and P_1 (both Public P_1 and B), respectively, also own five percent or more of L stock and are thus 5-percent shareholders of L. In addition, the public group of L is a 5-percent shareholder regardless of whether it owns five percent of L stock. Accordingly, A, Public L, Public P_3 (including P_4), Public P_2, and Public P_1 (including B), are the only 5-percent shareholders of L.

Example (5)(i) On September 4, 1987, L is owned 14 percent by each of A and B, 30 percent by each of P_1 and P_2, four percent by each of C and P_3, and two percent by each of D and AA. P_1 is owned 30 percent by each of A, B, and P_4 and 10 percent by D. P_2 is owned 70 percent by A, 10 percent by each of B and D, six percent by DD and four percent by C. AA owns 100 percent of the stock of P_3. P_4 is owned 60 percent by C and 20 percent by each of BB and CC.

(*ii*) The ownership structure of L is illustrated by the following chart:

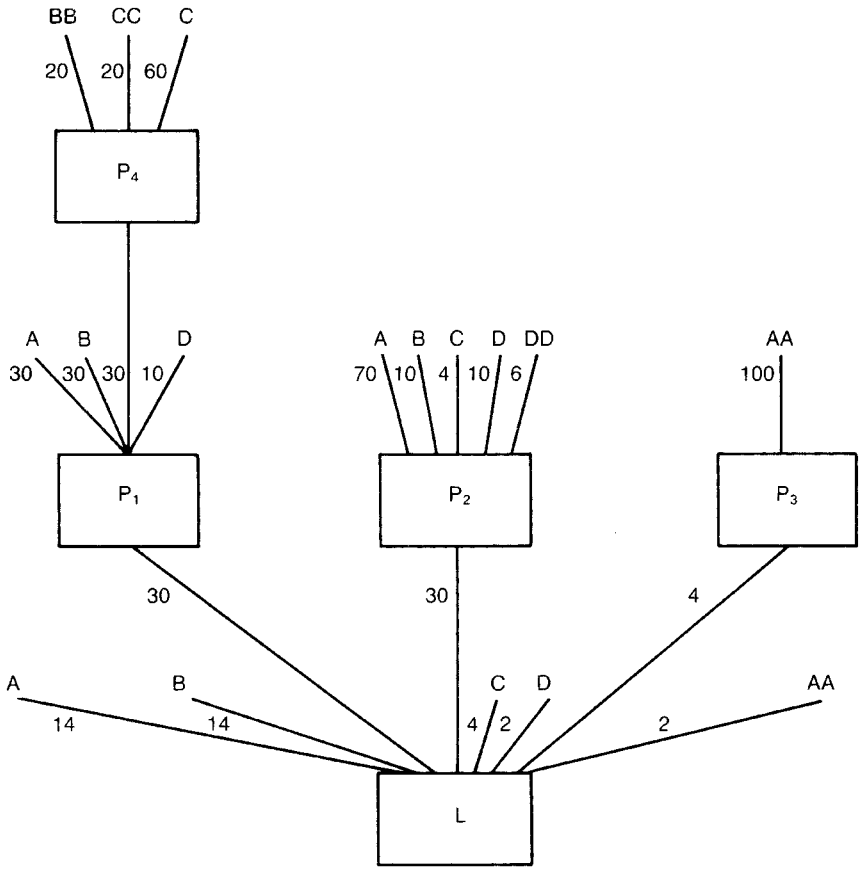

(*iii*) In order to identify L's 5-percent shareholders and their respective ownership interests in L on September 4, 1987, the rules of paragraph (j)(1) of this section apply to identify the public groups that are treated as separate 5-percent shareholders. Analysis begins with any highest tier entity, such as P_4. Each of P_4's shareholders is a 5-percent owner of P_4. C^4 owns 5.4 percent of L in his capacity as a 5-percent owner of P_4 and therefore is a 5-percent shareholder. Notwithstanding that C actually owns, directly and by attribution, 10.6 percent of L (four percent directly, 5.4 percent indirectly through P_4, and 1.2 percent through P_2), C's ownership interest in L as a 5-percent shareholder is presumed to include only the 5.4 percent indirect ownership through P_4. (Under paragraphs (g) and (k)(2) of this section, however, L must account for C's direct and indirect ownership interests in determining whether an ownership change occurs on any testing date if it has actual knowledge of such ownership on or berfore the date that its income tax return is filed for the taxable year that includes the testing date). Although BB and CC are each 5-percent owners of P_4, they are not 5-percent shareholders and therefore are members of the public group of P_4. Because the public group of P_4 indirectly owns only 3.6 percent of L, it is treated under paragraph (j)(1)(iv)(A) of this section as part of the public group of the next lower tier entity, P_1.

(*iv*) With respect to P_1, a first tier entity, each of its shareholders are 5-percent owners. Because A and B each indirectly own nine percent of L as 5-percent owners of P_1 and A indirectly owns 21 percent of L as a 5-percent owner of P_2, they are each 5-percent shareholders without regard to their direct

ownership interests in L. A's ownership interest in L as a 5-percent shareholder is 44 percent (14 percent directly, nine percent in his capacity as a 5-percent owner of P_1, and 21 percent in his capacity as a 5-percent owner of P_2). B's ownership interest in L as a 5-percent shareholder is 23 percent (14 percent directly and nine percent in his capacity as a 5-percent and nine percent in his capacity as a 5-percent owner of P_1). B's ownership interest as a 5-percent shareholder does not include the three percent interest he owns indirectly through P_2. (Under paragraphs (g) and (k)(2) of this section, however, L must account for B's direct and indirect ownership interests, including his three percent interest through P_2, in determining whether an ownership change occurs on any testing date if L has actual knowledge of such ownership on or before the date that its income tax return is filed for the taxable year that includes the testing date.) D is a 5-percent owner of P_1. Although D owns eight percent of L (two percent directly, three percent indirectly through P_1, and three percent indirectly through P_2), he is not a 5-percent shareholder because he does not own five percent or more of L stock either directly or in his capacity as a 5-percent owner of either P_1 or P_2. (Under paragraphs (g) and (k)(2) of this section, however, L must account for D's direct and indirect ownership interests in determining whether an ownership change occurs on any testing date to the extent L has actual knowledge of such ownership amounting to five percent or more of L stock before the date that its income tax return is filed for the taxable year that includes the testing date.) The public group of P_1 (comprised of the public group of P_4 and D's direct ownership interest in P_1) has a 6.6 percent interest in L and is therefore treated as a separate 5-percent shareholder.

(*v*) With respect to highest tier entity P_2, D is a 5-percent owner who is not a 5-percent shareholder for the reason described in the preceding subdivision. DD is a 5-percent owner of P_2, who is not a 5-percent shareholder, because DD indirectly owns only 1.8 percent of L. Assuming that L does not have actual knowledge of B's and C's direct ownership interest in P_2, those interests are accounted for in computing the ownership interest are accounted for in computing the ownership interest of the public group of P_2. Therefore, each of P_2's shareholders, except A who is a 5-percent shareholder in his capacity as a 5-percent owner of P_2, are treated as members of the public group of P_2 that owns nine percent of L and is thus treated as a separate 5-percent shareholder.

(*vi*) Because the direct ownership interest of P_3 is less than five percent, it is a public shareholder. Therefore, assuming that L does not have actual knowledge of C's, D's, or AA's direct and/or indirect ownership interests in L, the public group of L is a separate 5-percent shareholder owning 12 percent of L (comprised of the direct ownership interests of C, D, AA and P_3).

(2) *Segregation rules applicable to transactions involving the loss corporation*—(i) *In general.* For purposes of this section, if—

(A) A transaction is described in paragraph (j)(2)(iii) of this section, and

(B) The loss corporation has one or more direct public groups immediately before and after the transaction,

the stock owned by such direct public group or groups is subject to the segregation rules described in paragraph (j)(2)(iii) of this section for purposes of determining whether an ownership change has occurred on the date of the transaction (and on any subsequent testing date with a testing period that includes the date of such transaction). See paragraph (j)(3) of this section for the application of the rules of this paragraph (j)(2) to transactions involving first tier entities or higher tier entities.

(ii) *Direct public group.* For purposes of this section, a direct public group is any public group of the loss corporation described in paragraph (j)(1)(iv)(C) of this section or any public group of the loss corporation resulting from the application of paragraph (j)(2)(iii) or (j)(3)(i) of this section.

(iii) *Transactions to which segregation rules apply*—(A) *In general.* The segregation rules of this paragraph (j)(2)(iii) apply to any transaction described in paragraph (j)(2)(iii)(B), (C), (D), (E), or (F) of this section in the manner specified. The presumptions adopted by this paragraph (j)(2)(iii) shall not apply only if, and to the extent that, the loss corporation either has actual knowledge of facts to the contrary regarding its stock ownership and is thus subject to paragraph (k)(2) of this section, or is subject to paragraph (k)(4) of this section. Any direct public group that is required to be identified as a result of a transaction described in paragraph (j)(2)(iii) of this section shall be treated as a 5-percent shareholder under paragraph (g)(1)(iv) of this section without regard to whether such group, at any time during the testing period, owns five percent or more of the loss corporation stock. To the extent that the presumptions are rebutted, the public

shareholders, public owners and 5-percent owners who are not 5-percent shareholders may be aggregated into additional public groups. For an exception applicable to certain regulated investment companies, see § 1.382–3(k)(1).

(B) *Certain equity structure shifts and transactions to which section 1032 applies*—(*1*) *In general.* In the case of—

(*i*) A transaction that is an equity structure shift that also is described in section 381(a)(2) and in which the loss corporation is a party to the reorganization, or

(*ii*) A transfer of the stock of the loss corporation (including treasury stock) by the loss corporation in any other transaction to which section 1032 applies,

each direct public group that exists immediately after such transaction shall be segregated so that each direct public group that existed immediately before the transaction is treated separately from the direct public group that acquires stock of the loss corporation in the transaction. The direct public group that acquires stock of the loss corporation in the transaction is presumed not to include any members of any direct public group that existed immediately before the transaction. For purposes of this paragraph (j)(2)(iii)(B), a person is treated as acquiring stock of the loss corporation in a reorganization as the result of the person's ownership interest in another corporation that succeeds to the loss corporation's pre-change losses (determined as if the testing date were the change date and treating the amount of any net unrealized built-in loss as a pre-change loss) in a transaction to which section 381(a)(2) applies. In determining whether a transaction is described in section 1032 for purposes of this paragraph (j)(2)(iii)(B), the transfer by the loss corporation of any interest not constituting stock that is treated as stock under paragraph (f)(18)(iii) of this section shall be treated as the transfer of stock. See § 1.382–3(j) for exceptions to the segregation rules of this paragraph (j)(2)(iii)(B)(*1*).

(*2*) *Examples.*

Example (1) (*i*) P_1 owns 60 percent of the stock of L. The remaining L stock (40 percent) is owned by Public L. A owns 40 percent of the P_1 stock. The remaining P_1 stock (60 percent) is owned by Public P_1. P_2 is a publicly traded corporation owned by shareholders who each own less than five percent of P_2 stock (Public P_2).

(*ii*) On May 22, 1988, L merges into P_2 in a transaction described in section 368(a)(1)(A), with the shareholders of L receiving an amount of P_2 stock equal to 70 percent of the value of P_2 immediately after the reorganization.

(*iii*) Immediately before the merger, L's 5-percent shareholders were Public L (40 percent), Public P_1 (36 percent), and A (24 percent). Although the shareholders of P_2 (immediately before the merger) do not acquire any stock in the merger, they are treated as acquiring a direct ownership interest in the loss corporation in the reorganization because P_2 succeeds to the pre-change losses of L in a transaction to which section 381(a)(2) applies. As a result of the merger, which constitutes a transaction described in (j)(2)(iii)(B)(*1*) of this section, L's direct public group, Public L, must be segregated from the direct public group that would otherwise exist after the transaction (Public L and Public P_2). Public L, the direct public group that exists before the merger, has a continuing 28 percent interest in the loss corporation [70 percent of P_2 shares received in the merger x 40 percent shares of L owned prior to the merger] that must be segregated from the interests acquired by Public P_2.

(*iv*) In addition, Public P_1, which owns five percent or more of the stock of P_2 through P_1's ownership interest in P_2, also is segregated from any other public group (*i.e.*, both Public L and Public P_2) under paragraph (j)(1) of this section. Therefore, under paragraphs (j)(1) and (2) of this section, Public P_2 (excluding the members of Public L and Public P_1 immediately before the merger) is treated as a separate public group and 5-percent shareholder.

(*v*) The only 5-percent shareholder whose interest in the loss corporation, P_2, has increased during the testing period is Public P_2. Its interest has increased by 30 percentage points. Accordingly, no ownership change results from the merger. For purposes of measuring the shift in ownership of P_2 on any subsequent testing date with a testing period that includes May 22, 1988 (the date on which L merged into P_2), Public P_2 will continue to be treated as a direct public group, separate from Public L (the members of which own P_2 stock as a result of the merger) and Public P_1.

Example (2) (*i*) P and L are each owned by 21 equal shareholders. Each of 14 of the shareholders of P and L are owners of both corporations (''common owners''). L has actual knowledge of this cross ownership. therefore, as a group, these persons own 66⅔ percent of each of P and L. P stock has a value of $600 and L stock has a value of $400.

(*ii*) P merges into L under section 368(a)(1)(A) on June 10, 1988. Ordinarily, the direct public group of L that exists immediately before the transaction would be segregated from the direct public group that acquires stock in the merger (the public group of P immediately before the merger). In view of the common ownership of P and L, however, a third group may be created under paragraph (j)(2)(iii)(A) of this section so that L's owners following the merger would be: The common owners (66⅔ percent), Public L, less the common owners, 13 1/3 percent), and Public P, less the common owners (20 percent). Accordingly, the only 5-percent shareholder increasing its ownership interest by 20 percentage points and no ownership change occurs as a result of the merger.

Example (3) (*i*) L is entirely owned by Public L. L commences and completes a public offering of common stock on January 22, 1988, with the result that its outstanding stock increases from 100,000 shares to 300,000 shares. No person owns as much as five percent of L stock following the public offering.

(*ii*) The public offering of L stock is a transaction to which section 1032 applies. Immediately before the public offering, L's only 5-percent shareholder was Public L, a direct public group. Therefore, Public L (as in existence immediately before the transaction) must be segregated from the direct public group that would otherwise exist immediately after the transaction. Under paragraph (j)(2)(iii)(B)(*1*) of this section, the acquisition of 200,000 shares of L stock in the public offering must be treated as acquired by a direct public group (''New Public L'') that is separate from Public L. Each such public group is treated as an individual that is a separate 5-percent shareholder. See paragraphs (g)(1)(iv) and (j)(1)(ii) of this section.

(*iii*) As a result of the public offering, L has two 5-percent shareholders, Public L and New Public L, which own 33⅓ percent and 66⅔ percent of the stock of L, respectively. Because the members of New Public L are presumed not to be members of Public L (and not to be related to any such members), the ownership interest of New Public L immediately prior to the offering of stock was 0 percent.

(*iv*) New Public L is a 5-percent shareholder that has increased its ownership interest in L by more than 50 percentage points during the testing period (by 66⅔ percentage points). Thus, there is an ownership change with respect to L. For purposes of subsequent transactions, Public L and New Public L will not be segregated into two public groups because a new testing period commences on the day following the change date, January 23, 1988 (*i.e.*, any subsequent testing date will not have a testing period that includes the date of the public offering).

Example (4). The facts are the same as in *Example (3)*, but L establishes that 60,000 shares of the newly issued L stock were acquired by its shareholders of record on the date of the stock issuance (*i.e.*, members of Public L, referred to as Acquiring Public L) by persons owning 27 percent of the L stock immediately before the stock issuance. Accordingly, L has actual knowledge that New Public L acquired no more than 140,000 shares of L stock in the public offering. Under paragraphs (j)(2)(iii) and (k)(2) of this section, New Public L may be treated as having increased its ownership interest in L by 46⅔ percentage points (140,000 shares acquired in the offering/300,000 shares outstanding). L also has actual knowledge that the members of Public L owning 27 percent of L stock immediately before the stock issuance (27,000 shares/100,000 shares outstanding) own 29 percent of L stock immediately after such issuance ([27,000 shares + 60,000 shares acquired in the offering]/300,000 shares outstanding). Assuming that L chooses to take its actual knowledge into account for purposes of determining whether an ownership change occurred on January 22, 1988, Public L is segregated into two direct public groups immediately before the stock issuance so that the two percentage point increase in the ownership interest in L by Acquiring Public L is taken into account. The total increased ownership interest in L by New Public L and Acquiring Public L on the testing date over their lowest ownership interest during the testing period is 48 2/3 percent. Thus, no ownership change occurs with respect to L.

Example (5) (*i*) L is owned entirely by 10,000 unrelated individuals, none of whom own as much as five percent of L stock (''Public L''). P is owned entirely by 1,500 unrelated individuals, none of whom own as much as five percent of P stock (''Public P''). On December 22, 1988, L acquires all of the P stock from Public P in exchange for L stock representing 25 percent of the value of L, in a transaction described in section 368(a)(1)(B).

(*ii*) Under paragraph (j)(2)(iii)(B)(*1*) of this section, Public L, the direct public group that owns L stock immediately before and after the transaction to which section 1032 applies, is treated separately from Public P, the direct public group that acquires L stock in the transaction. Because Public P's percentage ownership interest in L increases to only 25 percent (as compared with 0 percent before the acquisition), no ownership change occurs. For purposes of determining whether an ownership change occurs on any testing date with a testing period that includes December 22, 1988, Public L and Public P will continue to be treated as separate 5-percent shareholders.

(*iii*) See *Example (4)* in paragraph (j)(3)(iv) of this section for the application of paragraph (j)(2)(iii)(B) of this section to a reorganization under section 368(a)(1)(B) in which the loss corporation is acquired.

(C) *Redemption-type transactions—(1) In general.* In the case of a transaction in which the loss corporation acquires its stock in exchange for property, each direct public group that exists immediately before the transaction shall be segregated at that time (and thereafter) so that the stock that is acquired in the transaction is treated as owned by a separate public group from each public group that owns the stock that is not acquired. For purposes of the preceding sentence, the term property shall include stock described in section 1504(a)(4) and stock described in paragraph (f)(18)(ii) of this section. Each direct public group that owned the stock that is acquired in the transaction is presumed not to own any such stock immediately after the transaction.

(*2*) *Examples.*

Example (1). L is entirely owned by Public L. There are 500,000 shares of L stock outstanding. On July 12, 1988, L acquires 150,000 shares of its stock for cash. Because L's acquisition is a redemption, Public L is segregated into two different public groups immediately before the transaction (and thereafter) so that the redeemed interests (''Public RL'') are treated as part of a public group that is separate from the ownership interests that are not redeemed (''Public CL''). Therefore, as a result of the redemption, Public CL's interest in L increases by 30 percentage points (from 70 percent (350,000/500,000) to 100 percent) on the July 12, 1988 testing date. Because the resulting increase is not more than 50 percentage points, no ownership change occurs. For purposes of determining whether an ownership change occurs on any subsequent testing date having a testing period that includes such redemption, Public CL is treated as a 5-percent shareholder whose percentage ownership interests in L increased by 30 percentage points as a result of the redemption.

Example (2). L is entirely owned by Public L. There are 250,000 shares of L common stock outstanding. On April 22, 1988, L acquires 100,000 shares of its outstanding common stock in exchange for 100,000 shares of preferred stock described in section 1504(a)(4). (The transaction thus constitutes a recapitalization within the meaning of section 368(a)(1)(E).) As a result of the recapitalization, which is a transaction described in paragraph (j)(2)(iii)(C) of this section, Public L is segregated into two different public groups immediately before the transaction (and thereafter) so that the stock acquired by L is treated as owned by a public group (''Public RL'') that is separate from the public group that owns the stock that is not so acquired (''Public CL''). Therefore, as a result of the transaction, Public CL's interest in L increases by 40 percentage points (from 60 percent to 100 percent). Because the resulting increase is not more than 50 percentage points, no ownership change occurs. For purposes of determining whether an ownership change occurs on any subsequent testing date with a testing period that includes the date of the recapitalization, Public CL is treated as a separate 5-percent shareholder whose percentage ownership interest increased by 40 percentage points as a result of the redemption type transaction.

(D) *Acquisition of loss corporation stock as the result of the ownership of a right to acquire stock—(1) In general.* In the case of a deemed acquisition of stock of the loss corporation as the result of the ownership of a right issued by the loss corporation to acquire such stock (see paragraph (h)(4) of this section), each direct public group that exists immediately after such acquisition shall be segregated so that each direct public group that existed immediately before the transaction is treated separately from the direct public group that is deemed to acquire stock of the loss corporation as a result of the ownership of the right to acquire such stock. The direct public group that is treated as acquiring stock of the loss corporation in the transaction is presumed not to include any members of any direct public group that existed immediately before the transaction. In applying the rules of paragraph (h)(4) of this section, the segregation rules of this paragraph (j)(2)(iii)(D) shall apply before making the determination required under that paragraph (h)(4) of this section. See § 1.382–3(j)(9) for rules relating to this paragraph (j)(2)(iii)(D).

(*2*) *Example.*

(*i*) L has 700,000 shares of common stock outstanding. Public L owns all of the outstanding L common stock. On May 20, 1988, L issues a class of debentures to the public that, in the aggregate, may be converted into 300,000 shares of L common stock. On September 7, 1988, P_1 acquires 210,000 shares of L common stock over a public stock exchange. None of the L debentures have been converted as of that date.

(*ii*) By virtue of L's issuance of convertible debentures, May 20, 1988 is a testing date. See paragraph (a)(2)(i) of this section. Immediately before the issuance of the convertible debentures, L's only 5-percent shareholder

was Public L, a direct public group. Therefore, under paragraph (j)(2)(iii)(D) of this section, Public L must be segregated from the direct public group that would otherwise exist immediately after the transaction for the purpose of applying paragraph (h)(4) of this section, so that any acquisition of L stock through the conversion of L's debentures is treated as made by a public group other than Public L (''New Public L''). Assuming the largest increase in the total percentage stock ownership of New Public L on the testing date (see paragraph (h)(4) of this section), New Public L would have increased its ownership interest in L by 30 percentage points. Therefore, the stock of L would not be treated as acquired pursuant to a deemed conversion of the L debentures on May 20, 1988, under paragraph (h)(4) of this section, because the conversion would not cause an ownership change.

(*iii*) P_1's acquisition of L common stock results in second testing date. For the purpose of applying paragraph (h)(4) of this section, Public L must again be segregated from the direct public group that would otherwise result from conversion of the debentures, so that a deemed acquisition of L stock through the conversion of L's debentures on September 7, 1988 is treated as made by a public group other than Public L (''New Public L''). As on the previous testing date, New Public L would have increased its ownership interest in L by 30 percentage points if it were treated as having acquired L common stock pursuant to the conversion of the L debentures. The increase in New Public L's ownership, taken together with P_1's 21 percentage point ownership increase in L during the testing period [210,000 shares deemed converted/(700,000 (actual) + 300,000 (deemed) shares outstanding)], results in an ownership change.

(E) *Transactions identified in the Internal Revenue Bulletin.* Any transaction that is designated by the International Revenue Service in the Internal Revenue Bulletin shall be subject to the rules, as provided in such bulletin, similar to the rules described in this paragraph (j)(2)(iii).

(F) *Issuance of rights to acquire loss corporation stock—*(*1*) *In general.* In the case of any transaction that is described in paragraph (j)(2)(iii)(B), (D) or (E) of this section in which the loss corporation issues rights to acquire its stock to the members of more than one public group, those rights shall be presumed to be exercised pro rata by each such public group as those rights are actually exercised. See §1.382–3(j)(10) for an exception to the application of the rule of this paragraph (j)(2)(iii)(F)(*1*) to stock issued on the exercise of a transferable option.

(*2*) *Example.*

(*i*) L, which has six million shares outstanding, is owned entirely by Public L and P is owned entirely by Public P. On November 30, 1988, P merges into L in a transaction qualifying under section 368(a)(1)(A) with Public P receiving four million shares of L stock as a result of the reorganization. Under paragraph (j)(2)(iii)(B) of this section, Public L and Public P continue to be treated as separate public groups following the merger. Pursuant to the plan of reorganization, L also issues an amount of warrants in L stock pro rata to Public L and Public P that, if exercised, would result in the issuance of an additional two million shares of L stock. On November 30, 1989, when only one-half of the outstanding warrants have been exercised, A acquires all of the unexercised warrants.

(*ii*) Without regard to the warrants distributed in reorganization, Public P's ownership interest in L increases by 40 percentage points on November 30, 1988, relative to its lowest ownership interest in L at any time during the testing period (0 percent prior to the merger). For purposes of determining whether an ownership change occurs on November 30, 1988, the segregation rules of paragraphs (j)(2)(iii)(B) and (D) of this section does not require that a third direct public group be separately identified and treated as acquiring the warrants, because L has actual knowledge that Public L and Public P acquired the distributed warrants in proportion to their respective ownership interests in L stock. Because the largest increase in the ownership of L on the testing date results from treating only Public P as exercising the distributing warrants, in which event, its ownership interest would increase by 44.4 percentage points ([four million shares acquired in the merger + 800,000 shares deemed acquired]/10.8 million (actual and deemed) shares outstanding), the issuance of the warrants by L does not cause an ownership change on November 30, 1988.

(*iii*) Under paragraph (j)(2)(iii)(F)(*1*) of this section, each actual exercise of warrants to acquire one million shares of L stock between November 30, 1988 and November 30, 1989 is treated as made pro rata by Public L and Public P (600,000 shares to Public L and 400,000 shares to Public P). Accordingly, as a result of the actual exercises of warrants during that period the ownership interests of the only 5-percent shareholders, Public L and Public P, are proportionately increased.

(*iv*) A's acquisition of the all of the outstanding warrants on November 30, 1989 requires the determination whether there has been an ownership change with respect to L, because A would be 5-percent shareholder

under paragraph (g)(1)(i) of this section owning 8⅓ percent of the L stock if the acquired warrants were exercised (one million shares deemed acquired/12 million (actual and deemed) shares outstanding). See paragraph (a)(2)(i) of this section. Under paragraph (h)(4)(i) of this section, A is not treated as having exercised those warrants, because an ownership change would not results. (Public P's 36⅔ percentage point increase [(four million shares acquired in the merger + 400,000 shares deemed acquired)/12 million (actual and deemed) shares outstanding] and A's 8⅓ percentage point increase is not greater than 50 percentage points).

(iv) *Combination of de minimis public groups*—(A) *In general.* Notwithstanding paragraph (j)(2)(iii)(A) of this section, any public group first identified during a taxable year, as a result of any transaction described in paragraph (j)(2)(iii)(B), (D), (E), or (F) of this section, that owns less than five percent of loss corporation stock may be combined, at the option of the loss corporation, with any other such groups also first identified as a result of any such transaction that occurs during such taxable year.

(B) *Example.*

(*i*) L is widely held with no person owning as much as five percent of the L stock at any time (''Public L''). L's taxable year ends on December 31. On January 1, 1989, L issues a class of debt maturing on December 31, 2019 (''Class A Debentures'') with respect to which it will semi-annually issue L stock in discharge of its interest obligation. In addition, L issues an amount of L stock to the public in two separate transactions during 1989. As a percentage of the L stock outstanding at the close of L's taxable year on December 31, 1989, L issued .45 percent of its stock on each of two dates in payment of interest with respect to the Class A Debentures, 4.5 percent of its stock in the first stock offering and six percent of its stock in the second stock offering. During 1990, L did not issue stock other than in payment of interest with respect to the Class A Debentures. As a percentage of L stock outstanding on December 31, 1990, L issued .41 percent of its stock on each of two dates during 1990 with respect to its outstanding debt.

(*ii*) Under paragraph (h)(4)(x)(E) of this section, L's obligation to issue stock in satisfaction of the interest with respect to the Class A Debentures until December 31, 2019, is not subject to paragraph (h)(4)(i) of this section and thus is taken into account only as such stock is issued.

(*iii*) The application of the segregation rules of paragraphs (j)(2)(iii)(B) and (iv) of this section require the identification of at least two additional, separate direct public groups during 1989. First, the persons who acquire six percent of L stock in a public offering to which section 1032 applies must be treated as a separate 5-percent shareholder (''Public 1L''). See paragraph (j)(2)(iii)(B) of this section. Even though this group was first identified in 1989, it may not be combined with other public groups also first identified in 1989 because it owns five percent or more of L stock. Second, although each of the three other issuances of L stock during the year ordinarily result in the identification of an additional, separate direct public group, each such direct public group may be combined with the two other such groups into a single public group (''Public 2L''). As of the end of 1989, Public 2L would own a total of 5.4 percent of the stock of L.

(*iv*) The application of the segregation rules of paragraphs (j)(2)(iii)(B) and (iv) of this section require the identification of at least one additional, direct public group during 1990. Because each additional, direct public group first identified in 1990 acquires less than five percent of L stock, they may be combined into a single public group (''Public 3L'') owning .82 percent of the stock of L. Public 3L is treated as a five percent shareholder even though it owns less than five percent of the stock of L. See paragraph (j)(2)(iv)(A) of this section.

(v) *Multiple transactions*—(A) *In general.* If a transaction (or any part thereof) is described by more than one subdivision of paragraph (j)(2)(iii) of this section, each such subdivision shall apply to the transaction (or each part of the transaction) in the manner that results in the largest increase in the percentage stock ownership by the 5-percent shareholders.

(B) *Example.*

(*i*) All of the common stock of L is owned by 1,000 unrelated persons, none of whom owns as much as five percent of the L stock (''Public CL''). L has outstanding a class of preferred stock described in section 1504(a)(4) that is owned in equal amounts by 500 unrelated persons (''Public PL'').

(*ii*) On September 4, 1988, L rearranges its capital structure by redeeming 70 percent of the common stock owned by 700 of the shareholders in exchange for cash. In addition, all of the preferred stock is exchanged for a new class of common stock (nonvoting) representing 40 percent of the value of L.

(*iii*) With respect to the part of the transaction that is treated as a redemption under paragraph (j)(2)(iii)(C) of this section (the exchange of common stock for cash), Public CL is segregated into two different public groups immediately before the transaction (and

thereafter) so that the owners of the redeemed stock (''Public RCL'') are treated as part of a public group that is separate from the public group comprised of the owners of the stock that is not redeemed (''Public CCL''). As a result of the redemption, Public CCL's percentage ownership interest in L thus increases by 30 percentage points from 30 percent to 60 percent (taking into account all transactions occurring on the testing date, because the change in ownership is measured under paragraph (a)(1)(i) of this section by reference to each 5-percent shareholder's ownership interest immediately after the testing date). In addition, the exchange of preferred stock for nonvoting common stock is a transaction to which section 1032 applies. Under paragraph (j)(2)(v) of this section, the part of the transaction to which section 1032 applies is also subject to the segregation rules in the manner specified in paragraph (j)(2)(iii)(B) of this section. Accordingly, Public PL, the direct public group that acquires L nonvoting common stock in exchange for L preferred stock, must be treated as a separate public group from the other direct public groups, Public CCL and Public RCL. As a separate public group, Public PL's percentage stock ownership in L increases by 40 points (as compared to 0 percent prior to the transaction).

(*iv*) In summary, Public CCL increases its percentage ownership in L by 30 percentage points and Public PL increases its percentage ownership by 40 percentage points. Consequently, an ownership change occurs with respect to L on September 4, 1988.

(vi) *Acquisitions made by either a 5-percent shareholder or the loss corporation following application of the segregation rules.* Unless a different proportion is established by either the loss corporation or the Internal Revenue Service, the acquisition of loss corporation stock by either a 5-percent shareholder or the loss corporation on any date on which more than one public group of the loss corporation exists by virtue of the application of the rules of this paragraph (j)(2) shall be treated as being made proportionately from each public group existing immediately before such acquisition. See paragraph (g)(5)(i)(B) of this section for the application of this paragraph to the ownership interest of a 5-percent shareholder that owns less than five percent of the stock of the loss corporation on the testing date.

(3) *Segregation rules applicable to transactions involving first tier entities or higher tier entities*—(i) *Dispositions.* If a loss corporation is owned, in whole or in part, by a public group (or groups), the rules of paragraphs (j)(2)(iii)(B) and (iv) of this section shall apply to any transaction in which a first tier entity or an individual that owns a direct ownership interest in the loss corporation of five percent or more transfers a direct ownership interest in the loss corporation to public shareholders. Therefore, each direct public group that exists immediately after such a disposition shall be segregated so that the ownership interests of each public group that existed immediately before the transaction are treated separately from the public group that acquires stock of the loss corporation as a result of the disposition by the individual or first tier entity. The principles of this paragraph (j)(3)(i) shall also apply to transactions in which an ownership interest in a higher tier entity that owns five percent or more of the loss corporation (determined without regard to the application of paragraph (h)(2)(i)(A) of this section) or a first tier entity is transferred to a public owner or 5-percent owner who is not a 5-percent shareholder.

(ii) *Example.*

(A) L is owned equally by Public L, P and E. Public L consists of 150 equal, unrelated shareholders. P is owned by Public P, a group consisting of 1,500 equal, unrelated shareholders. E is a partnership and none of its partners are 5-percent owners. On October 22, 1988, E sells its entire interest in L over a public stock exchange. No individual or entity acquires as much as five percent of L's stock as the result of E's disposition of the L stock.

(B) The disposition of the L stock by E is a transaction that causes the segregation of L's direct public group that exists immediately before the transaction (Public L) from the direct public group that acquires L stock in the transaction (Public EL). As a result, L has three 5-percent shareholders, Public L, Public P (through the application of paragraph (j)(1) of this section) and Public EL, each of which owns 33⅓ percent of L stock. Therefore, Public EL is a 5-percent shareholder that has increased its ownership interest in L by 33⅓ percentage points during the testing period. For purposes of subsequent transactions, Public L and Public EL will continue to be treated as separate direct public groups until any subsequent testing date that does not have a testing period that includes E's disposition of L stock.

(iii) *Other transactions affecting direct public groups of a first tier entity or higher tier entity*. The rules of paragraphs (j)(2)(i), (iii), (iv) and (v) of this section shall apply to transactions described in such paragraphs that involve either a higher tier entity that owns five percent or more of the loss corporation (determined without regard to the application of paragraph (h)(2)(i)(A) of this section) or a first tier entity. In applying those rules for purposes of this paragraph (j)(3)(iii), each direct public group of a first tier entity or a higher tier entity is any public group of any such entity identified in paragraph (j)(1)(iv)(A) or (B) of this section or resulting from the application of this paragraph (j)(3)(iii). The principles of paragraph (j)(2)(iii)(C) of this section also shall apply to any transaction that has the effect of a redemption-type transaction (e.g., an acquisition by the loss corporation of stock in a first tier entity).

(iv) *Examples.*

Example (1). The facts are the same as in *Example (1)* of paragraph (j)(2)(iii)(B)(*2*) of this section, except that Public L and P_1 own 40 percent and 60 percent, respectively, of the stock of HC which, in turn, owns 100 percent of L and HC merges into P_2. Under paragraph (j)(3)(iii) of this section, the rules of paragraph (j)(2)(iii)(B) of this section apply to segregate HC's direct public group (Public L) immediately before the merger from the direct public group (Public P_2) that acquires loss corporation stock in the merger. The consequences of the merger of HC into P_2 are thus the same as in *Example (1)* of paragraph (j)(2)(iii)(B)(*2*) of this section.

Example (2) (*i*) Twenty-five individual shareholders each own four percent of L (''Public L''). Public L is therefore the only 5-percent shareholder of L. Each of the shareholders of L contribute their L stock to a newly formed corporation, HC. In exchange for their contribution of L stock, HC issues 100 percent of each of its two classes of common stock (voting and nonvoting).

(*ii*) The formation of HC, a first tier entity of L, is a transaction to which section 1032 applies. Under paragraph (j)(3)(iii) of this section, the rules of paragraphs (j)(1)(iii) and (j)(2)(iii)(B) of this section are applied to this transaction with the result that the shareholders of HC, immediately after the issuance of HC stock, are presumed not to include any persons that previously had a direct or indirect ownership interest in L. The presumption underlying those rules, however, is rebutted by establishing that all of the HC stock outstanding immediately after the transaction was issued solely in exchange for L stock. Thus, Public HC (immediately after the transaction) and Public L (immediately before the transaction) would be treated owned by the same direct public group.

Example (3) (*i*) All of the stock of L is owned by unrelated shareholders, none of whom owns as much as five percent of L stock. P also is owned by unrelated shareholders, none of whom owns as much as five percent of P stock. On November 22, 1988, P incorporates P_1 with a contribution of P stock. Immediately thereafter, P_1 acquires all of the properties of L in exchange for its P stock in a forward triangular merger qualifying under sections 368 (a)(1)(A) and (a)(2)(D). The P stock transferred by P_1 equals 45 percent of the total outstanding P stock.

(*ii*) Immediately before the merger of L into P_1, P's only 5-percent shareholder was Public P, a direct public group of P. The rules of paragraph (j)(2)(iii)(B) of this section thus apply to the transaction under paragraph (j)(3)(i) of this section since P, a first tier entity, is a party to the reorganization described in such paragraph. Although Public P does not acquire any stock in the merger, it is treated as acquiring stock in the loss corporation, P_1, because such corporation succeeds to the pre-change losses of L in a transaction to which 381(a) applies. As a result of the merger, Public P, the direct public group of P that exists immediately before the merger, must be segregated from the direct public groups acquiring P stock in the reorganization. Public P is, therefore, treated as acquiring 55 percent of the outstanding stock of the loss corporation, P_1, in the transaction. The transaction, therefore, results in an ownership change for P_1.

Example (4) (*i*) L is owned 20 percent by A and 80 percent by 1,000 unrelated individuals and entities, none of whom owns as much as five percent of L stock (''Public L''). P is owned 10 percent by B, 40 percent by E, and 50 percent by 5,000 unrelated individuals, none of whom owns as much as five percent of P stock (''Public P''). E is owned 30 percent by C and 70 percent by 30 unrelated individuals, none of whom owns as much as five percent of E (''Public E'').

(*ii*) On October 31, 1987, P acquires all of the L stock from A and Public L in exchange for P stock representing 20 percent of the value of P (determined immediately after the acquisition) in a transaction described in section 368(a)(1)(B). After the acquisition, P is owned eight percent by B, 32 percent by E, four percent by A, and 56 percent by 6,000 unrelated individuals, none of whom owns as much as five percent of P. Because L is wholly owned by P immediately after the acquisition, L, under paragraph (j)(1) of this section, is treated as owned as follows: Eight percent by B, 9.6 percent by C (through C's ownership

interest in E, a highest tier entity, and E's ownership interest in P, a first tier entity), 22.4 percent by Public E (through its ownership interest in E and E's ownership interest in P), four percent by A, and 56 percent by the shareholders who each own less than five percent of L through their ownership interest in P.

(*iii*) Under paragraph (j)(3)(iii) of this section, the rules of paragraph (j)(2)(iii)(B) of this section apply to the reorganization since the transaction involved a first tier entity of L. Thus, the direct public group of P that exists immediately after the transaction must be segregated into two public groups—the direct public group of P that existed immediately before the acquisition (Public P) is treated separately from the direct public group consisting of the persons who acquire P stock in the transaction (Public L). Accordingly, immediately after the reorganization, Public P and Public L own 40 percent and 16 percent of L, respectively. See paragraph (h) of this section. (Under paragraph (g)(5)(ii)(B) of this section, L may treat the four percent of L stock owned by A immediately after the reorganization as the amount of L stock owned by A for each subsequent testing date having a testing period that includes the reorganization.)

(*iv*) In summary, after applying the rules of paragraphs (j)(1) and (3) of this section, L is treated as owned as follows:

5-percent shareholder	Percentage ownership interest
A	4.0
B	8.0
C	9.6
Public E	22.4
Public P	40.0
Public L	16.0

(*v*) The reorganization results in an ownership change, because B, C, Public E and Public P, all of whom are 5-percent shareholders, together have increased their percentage ownership in L by 80 percentage points as compared to their lowest percentage ownership in L at any time during the testing period (0 percent prior to the acquisition).

(v) *Acquisitions made by a 5-percent shareholder, a higher tier entity, or a first tier entity following application of the segregation rules.* The rules of paragraph (j)(2)(vi) of this section shall apply to the acquisition of an ownership interest in a first tier entity (or higher tier entity) if more than one direct public group of any such entity are segregated under the rules of this paragraph (j)(3). Accordingly, an acquisition by such an entity or a 5-percent shareholder of any ownership interest in such an entity shall be treated as made proportionately from the direct public groups resulting from the application of this paragraph (j)(3).

(k) *Operating rules*—(1) *Presumptions regarding stock ownership.* Subject to paragraphs (k)(2) and (4) of this section, for purposes of applying paragraphs (f), (g), (h), and (j)(1) of this section—

(i) *Stock subject to regulation by the Securities and Exchange Commission.* With respect to loss corporation stock that is described in Rule 13d–1(d) of Regulation 13D–G (or any rule or regulation to generally the same effect), promulgated by the Securities and Exchange Commission under the Securities and Exchange Act of 1934 (''registered stock''), a loss corporation may rely on the existence and absence of filings of Schedules 13D and 13G (or any similar schedules) as of any date to identify all of the corporation's shareholders who have a direct ownership interest of five percent or more (both individuals and first tier entities) on such date. A loss corporation may similarly rely on the existence and absence of such filings as of any date with respect to registered stock of any first tier entity or any higher tier entity to identify the 5-percent owners of any such entities on such date who indirectly own five percent or more of the loss corporation stock, and are thus 5-percent shareholders, and to identify any higher tier entities of such entities.

(ii) *Statements under penalties of perjury.* A loss corporation may rely on a statement, signed under penalties of perjury, by an officer, director, partner, trustee, executor or similar responsible person, on behalf of a first tier entity or a higher tier entity to establish the extent, if any, to which the ownership interests of any 5-percent owners or higher tier entities with respect to such entities have changed during a testing period. A loss corporation may not rely on such a statement (A) that it knows to be false or (B) that is made by either a first tier entity or higher tier entity that owns 50 percent or more of the stock of the loss corporation. For purposes of the preceding sentence, any first tier entities and higher tier entities that are known by the loss corporation to be members of

the same controlled group (within the meaning of section 267(f)) shall be treated as one corporation.

(2) *Actual knowledge regarding stock ownership.* For purposes of this section (other than paragraphs (g)(5) and (j)(1)(v) of this section), to the extent that the loss corporation has actual knowledge of stock ownership on any testing date (or acquires such knowledge before the date that the income tax return is filed for the taxable year in which the testing date occurs) by—

(i) An individual who would be a 5-percent shareholder, but for the application of paragraphs (h)(2)(iii), (h)(6)(iii) or (g)(2) of this section, or

(ii) A 5-percent shareholder that would be taken into account, but for paragraphs (h)(2)(iii), (h)(6)(iii) or (g)(3) of this section,

the loss corporation must take such stock ownership into account for purposes of determining whether an ownership change has occurred on that testing date. If a loss corporation acquires such knowledge after such income tax return is filed, the loss corporation may take such ownership into account for purposes of determining whether an ownership change occurred on that testing date and, if appropriate, file an amended income tax return (subject to any applicable statute of limitations). To the extent the loss corporation has actual knowledge on or after any testing date regarding the ownership interest in the loss corporation by members of one public group (described in paragraphs (g)(1)(ii), (iii) or (iv) of this section) and the ownership interest of those members in the loss corporation as members in another such public group, the loss corporation may take such ownership into account for purposes of determining whether an ownership change occurred on that testing date.

(3) *Duty to inquire as to actual stock ownership in the loss corporation.* For purposes of this section, the loss corporation is required to determine the stock ownership on each testing date (and, except as otherwise provided in this section, the changes in the stock ownership during the testing period) of—

(i) Any individual shareholder who has a direct ownership interest of five percent or more in the loss corporation,

(ii) Any first tier entity,

(iii) Any higher tier entity that has an indirect ownership interest of five percent or more in the loss corporation (determined without regard to paragraph (h)(2)(i)(A) of this section), and

(iv) Any 5-percent owner who indirectly owns five percent or more of the stock of the loss corporation in his capacity as a 5-percent owner in any one first tier entity or higher tier entity.

The loss corporation does not have any obligation to inquire or to determine facts relating to the stock ownership of any shareholders other than those described in the preceding sentence. In addition, the loss corporation does not have any obligation to inquire or to determine if the actual facts relating to the stock ownership of any shareholder are consistent with the ownership interests of the loss corporation as determined by applying the presumptions and other rules of paragraphs (g), (h), (j) or (k)(1) of this section.

(4) *Ownership interest structured to avoid the section 382 limitation.* For purposes of this section, if the ownership interests in a loss corporation are structured by a person with a direct or indirect ownership interest in the loss corporation to avoid treating a person as a 5-percent shareholder (or to permit the loss corporation to rely on the presumption provided in paragraph (g)(5)(i)(B) of this section) for a principal purpose of circumventing the section 382 limitation, then—

(i) Paragraph (h)(2)(iii) of this section shall not apply with respect to the ownership interests so structured and the constructive ownership rules of paragraph (h)(2)(i) of this section shall thus apply to attribute stock from any entity without regard to the amount of stock it owns in the loss corporation or any other corporation,

(ii) Paragraphs (g)(2) and (3) of this section shall be modified with respect to the ownership interests so structured so that the ownership interest of a person includes all of an individual's direct and indirect ownership in the loss corporation, without regard to whether each such interest represents five percent or more of the stock of the loss corporation, and

(iii) Paragraph (g)(5)(i)(B) of this section shall not apply with respect to the ownership interests so structured so that the ownership interest of a person takes into account his actual ownership interest in the loss corporation.

This paragraph (k)(4) shall apply, however, only if application would result in an ownership change.

(5) *Example.*

L is owned by 25 individuals who each own four percent of the outstanding L stock. A purchases 40 percent of L stock from such shareholders on August 13, 1988. Thereafter, B plans to acquire 15 percent of the L stock. B is advised concerning the potential application of section 382 to L. On February 1, 1989, B acquires a 15 percent interest in L pursuant to a program in which each of four corporations, P_1 through P_4, each of which is wholly-owned by B, acquire a 3.75 percent interest in L. A principal purpose of acquiring the L stock through four corporations is to avoid treating B as owning any ownership interest in L amounting to as much as five percent, and thus to circumvent the section 382 limitation by avoiding an ownership change. Under paragraph (k)(4) of this section, the limitation on the constructive ownership rules of paragraph (h)(2)(iii) of this section are disregarded and B is treated as a 5-percent shareholder owning 15 percent of the stock of L by virtue of his ownership interests in P_1 through P_4, notwithstanding paragraph (g)(2) of this section. Accordingly, an ownership change occurs with respect to L.

(6) *First tier entity or higher tier entity that is a foreign corporation or entity.* [Reserved]

(l) *Changes in percentage ownership which are attributable to fluctuations in value.* [Reserved]

(m) *Effective date*—(1) *In general.* Except as provided in this paragraph (m), section 382 shall apply to any ownership change that occurs immediately after an owner shift or an equity structure shift that occurs after December 31, 1986, or any other event occurring after such date that requires the determination of whether an ownership change has occurred under paragraph (a)(2)(i) of this section. In the case of an equity structure shift (including an equity structure shift that also constitutes an owner shift), any equity structure shift completed pursuant to a plan of reorganization adopted before January 1, 1987, shall be treated as occurring on the date such plan was adopted. Therefore, section 382 shall apply to any ownership change occurring immediately after—

(i) An owner shift (excluding an owner shift that also constitutes an equity structure shift) that occurs on or after January 1, 1987,

(ii) An equity structure shift that occurs after December 31, 1986, if it is completed pursuant to a plan of reorganization adopted on or after January 1, 1987, or

(iii) Any transfer or issuance of an option, or other interest that is similar to an option, that occurs on or after January l, 1987 and that is taken into account under paragraph (a)(2)(i) of this section.

With respect to equity structure shifts completed pursuant to plans adopted before January 1, 1987, section 382 shall be inapplicable only if the equity structure shift that is treated as occurring on the date the plan of reorganization for such shift was adopted (or other event occurring after the adoption of such plan) results in an ownership change before January 1, 1987. In that event, a new testing period for the loss corporation shall begin on the day after such ownership change.

(2) *Plan of reorganization.* For purposes of paragraph (m)(1) of this section, a plan of reorganization shall be treated as adopted on the earlier of—

(i) The first date that the boards of directors of all the parties to the reorganization have adopted the plan or have recommended adoption to their shareholders, or

(ii) The date the shareholders approve such reorganization.

If there is an ownership change with respect to a subsidiary as the result of a reorganization of the parent, the treatment of the subsidiary under this paragraph (m)(2) shall be governed by the classification of the parent-level transaction. For purposes of the preceding sentence, a corporation shall be treated as a subsidiary of another corporation only if the other corporation owns stock in that corporation meeting the requirements of section 1504(a)(2).

(3) *Earliest commencement of the testing period.* For purposes of determining if an ownership change has occurred at any time after May 5, 1986, the testing period shall begin no earlier than May

6, 1986. Under paragraph (d)(4) of this section, therefore, shifts in the ownership of stock of the loss corporation prior to May 6, 1986 are disregarded.

(4) *Transitional rules*—(i) *Rules provided in paragraph (j) of this section for testing dates before September 4, 1987.* For purposes of determining whether an ownership change occurs for any testing date before September 4, 1987.

(A) The rules of paragraph (j)(1) of this section shall apply only to stock of the loss corporation acquired after May 5, 1986, by any first tier entity or higher tier entity and shall not apply to any stock acquired by such an entity on or before that date,

(B) The rules of paragraph (j)(2) of this section shall apply only to equity structure shifts in which more than one corporation is a party to the reorganization and shall not apply to any other transactions, and

(C) The rules of paragraph (j)(3) of this section shall apply only to—

(*1*) Dispositions of stock acquired by an individual, a first tier entity or higher tier entity after May 5, 1986 (and shall not apply to dispositions of stock acquired on or before such date), and

(*2*) Equity structure shifts in which more than one corporation is a party to the reorganization (and shall not apply to any other transactions).

For any testing date before September 4, 1987, however, the loss corporation is permitted to apply all of the rules of paragraph (j) of this section. A loss corporation that applies the rules of paragraph (j) of this section under the preceding sentence must apply all of the rules of such paragraph in determining whether any ownership change occurs on any testing dates after May 5, 1986.

(ii) *Example.*

(*i*) L is owned entirely by 10,000 unrelated individuals, none of whom owns as much as five percent of the stock of L (''Public L''). P is owned entirely by 1,000 unrelated individuals, none of whom owns as much as five percent of the stock of P (''Public P'').

(*ii*) Between March 1, 1987 and June 1, 1987, P acquires 45 percent of L stock in a series of transactions. On June 15, 1987, L redeems 20 percent of the L stock from Public L.

(*iii*) Under paragraph (m)(4)(i)(A) of this section, the rules of paragraph (j)(1) of this section apply to the acquisitions made by P, because they occurred after May 5, 1986. Accordingly, following those acquisitions, the stock of L is owned 45 percent by Public P and 55 percent by Public L. Because the increase in the percentage ownership by Public P as a result of P's stock purchases is not more than 50 percent, no ownership change occurs as the result of P's purchases.

(*iv*) On or after September 4, 1987, the rules of paragraph (j)(2)(iii)(C) of this section apply to treat any L stock that is redeemed as owned by a public group that is separate from the public group owning the stock that is not redeemed. (Under paragraph (j)(2)(iii)(C) of this section, the continuing shareholders of Public L, who owned 35 percent of the stock of L before the redemption ([55 percent—20 percent]/100 percent) increase their ownership interest in L by 8.8 percentage points as a result of such redemption (43.8 percent—35 percent)). Those rules, however, do not apply to the June 15, 1987 redemption because it occurs before the date that paragraph (j)(2)(iii) of this section generally is effective. (Until September 4, 1987, paragraph (j)(2)(iii) of this section generally is effective only for equity structure shifts in which more than one corporation is a party to the reorganization.) Solely because of the application of paragraph (j)(1) of this section to P's acquisitions of L stock, Public P's ownership interest in L as a result of the redemption has increased from 45 percentage points to 56.2 percentage points which, compared to its lowest percentage ownership interest at any time during the testing period (0 percent prior to March 1, 1987), is a more than 50 percentage point increase thus causing an ownership change with respect to L on June 15, 1987.

(iii) *Rules provided in paragraph (j) of this section for testing dates on or after September 4, 1987.* For purposes of determining whether an ownership change occurs for any testing date on or after September 4, 1987, the rules of paragraphs (j)(2) and (3) of this section shall not apply to identify any public group resulting from—

(A) Any transaction described in such paragraphs (j)(2) and (3), unless that transaction is also described in paragraph (m)(4)(i)(B) or (C) of this section, or

(B) Any disposition of stock acquired on or before May 5, 1986, but only if such disposition or other transaction occurs before September 4, 1987. Thus, for example, the rules of paragraph (j)(2)(iii)(D) of this section shall apply only to rights to acquire stock of the loss corporation issued on or after such date.

(iv) *Rules provided in paragraphs (f)(18)(ii) and (iii) of this section.* For

purposes of determining whether an ownership change occurs for any testing date, the rules of paragraphs (f)(18)(ii) and (iii) of this section apply only to stock (or any other ownership interest) that is—

(A) Issued on or after September 4, 1987, or

(B) Transferred to (or by) a person who is a 5-percent shareholder (or would be a 5-percent shareholder if paragraph (f)(18)(iii) of this section were applicable) on or after September 4, 1987.

(v) *Rules provided in paragraph (a)(2)(ii) of this section.* The information statement required under paragraph (a)(2)(ii) of this section is not required to be filed with respect to any taxable year for which the due date (including extensions) of the income tax return of the loss corporation is on or before October 5, 1987.

(vi) *Rules provided in paragraph (h)(4) of this section.* The rules provided in paragraph (h)(4) of this section do not apply on any testing date on or after November 5, 1992. The rule provided in paragraph (h)(4)(viii) of this section applies to the lapse or forfeiture of any option treated as exercised under paragraph (h)(4)(i) of this section. If an option is treated as exercised under paragraph (h)(4)(i) of this section, and the option is actually exercised on a day that is within 120 days after the date on which the option is treated as exercised, the rule provided in paragraph (h)(4)(vi)(B) of this section applies (even if the actual exercise of the option occurs on a date on which the rules of paragraph (h)(4) of this section would not otherwise apply). Thus, in such a case, the loss corporation may elect to treat paragraphs (h)(4)(i) and (vi)(A) of this section as not applying to the option and take into account only the acquisition of loss corporation stock resulting from the actual exercise of the option.

(vii) *Rules provided in paragraph (a)(2)(i) of this section.* The rules provided in paragraph (a)(2)(i) of this section apply to determine whether dates prior to November 5, 1992, are testing dates. For rules regarding the determination of whether dates on or after November 5, 1992, are testing dates, see § 1.382–2(a)(4).

(5) *Bankruptcy proceedings*—(i) *In general.* In the case of a reorganization described in section 368(a)(1)(G) or an exchange of debt for stock in a title 11 or similar case (within the meaning of section 368(a)(3)), section 382 shall not apply to any ownership change resulting from such a reorganization or proceeding if a petition in such case was filed with the court before August 14, 1986. Accordingly, any shift in ownership in the loss corporation arising out of such reorganization or proceeding shall not be taken into account for purposes of determining whether an ownership change occurs on any testing date that occurs after December 31, 1986.

(ii) *Example.*

(*i*) L filed a petition in bankruptcy on September 29, 1985. As a result of a title 11 bankruptcy reorganization of L that is confirmed by a court on February 2, 1988, there is a shift in the ownership of L so that JK increased her interest in L by 24 percentage points relative to her lowest ownership interest in L during the testing period. JK is the only 5-percent shareholder of L following the reorganization whose interest in L increased as a result of the transaction. On December 25, 1988, GK purchases 42 percent of the outstanding stock of L from shareholders other than JK.

(*ii*) There is no ownership change on December 25, 1988 because the 24 percentage point increase in JK's ownership interest in L is not taken into account under paragraph (m)(6)(i) of this section.

(*iii*) The facts are the same as in (*i*), except that the acquisitions by JK and GK occurred on August 5, 1986 and September 26, 1986, respectively. Because paragraph (m)(6)(i) of this section is only applicable with respect to the determination of whether an ownership change has occurred on any testing date that occurs after December 31, 1986, there is an ownership change as a result of GK's acquisition on September 26, 1986. Accordingly, section 382 is inapplicable to such ownership change under paragraph (m)(1) of this section because it occurred prior to January 1, 1987. Under paragraph (d)(2) of this section, the testing period for determining whether an ownership change occurs on any subsequent testing date shall commence no earlier than September 27, 1986.

(6) *Transactions of domestic building and loan associations.* The rules of paragraph (j)(2)(iii)(B) of this section (and the application of those rules by virtue of paragraph (j)(3) of this section) shall not apply to a public offering of stock

by a domestic building and loan association described in section 591 (or any corporation that owns stock in the association meeting the requirements of section 1504(a)(2)) prior to January 1, 1989. In the case of any transaction described in the preceding sentence, any transitory ownership of stock by any entity that is an underwriter shall be disregarded so that the rules of paragraph (j)(1) of this section shall not apply to treat such stock as owned by the owners of the underwriter and thus the rules of paragraph (j)(3)(i) of this section shall not apply to the disposition of such stock by the underwriter. For purposes of this paragraph (m)(7)—

(i) Ownership shall be considered transitory only with respect to an underwriter acquiring stock in a firm commitment underwriting to the extent the stock is disposed of pursuant to the offer (but in no event later than sixty (60) days after the initial offering) and,

(ii) To the extent a transaction may be described both by paragraph (j)(2)(iii)(B) of this section and any other provision of paragraph (j)(2)(iii) or (3) of this section, paragraph (j)(2)(v)(A) of this section shall not apply and the transaction shall be treated as described solely by paragraph (j)(2)(iii)(B) of this section.

(7) *Transactions not subject to section 382*—(i) *Application of old section 382.* Old section 382 shall not apply to a loss corporation on or after the date on which an ownership change occurs, but only if such ownership change results in the application of the section 382 limitation (as defined in section 382(b)) with respect to the loss corporation.

(ii) *Effect on testing period.* The application of old section 382 to a transaction is disregarded for purposes of paragraph (d)(2) of this section unless the transaction that results in such application is the last component of an ownership change after May 5, 1986 that is not subject to section 382 under the effective date rules of this paragraph (m) (*e.g.*, an ownership change occurring as the result of an individual's purchase of more than 50 percent of L stock on any date on or before December 31, 1986).

(iii) *Termination of old section 382.* [Reserved]

(8) *Options issued or transferred before January 1, 1987*—(i) *Options issued before May 6, 1986.* An option issued before May 6, 1986, is subject to the rules of paragraph (h)(4) of this section only if it is transferred by (or to) a 5-percent shareholder (or a person who would be a 5-percent shareholder if the option were treated as exercised) on or after such date. In all other cases, such an option shall not be subject to paragraph (h)(4)(i) of this section, but shall be subject to paragraph (h)(4)(xii) of this section. Thus, for example, a warrant to acquire stock of the loss corporation issued before May 6, 1986 shall not be subject to paragraph (h)(4) of this section unless the warrant is transferred by (or to) a 5-percent shareholder. The exercise of such a warrant, however, would be taken into account as required by this paragraph (m)(8)(i) and paragraph (h)(4)(xii) of this section.

(ii) *Options issued on or after May 6, 1986 and before September 18, 1986.* An option issued or transferred on or after May 6, 1986, and before September 18, 1986, is subject to the rules of paragraph (h)(4) of this section.

(iii) *Options issued on or after September 18, 1986 and before January 1, 1987.* An option issued or transferred on or after September 18, 1986, and before January 1, 1987, is subject to the rules of paragraph (h)(4) of this section, except that the option shall be treated for purposes of this section as if it never had been issued in the event that either—

(A) The option lapses unexercised or is irrevocably forfeited by the holder thereof, or

(B) On the date the option was issued, there was no significant likelihood that such option would be exercised within the five-year period from the date of such issuance and a purpose for the issuance of the option was to cause an ownership change prior to January 1, 1987.

(9) *Examples.* The rules of this paragraph (m) may be illustrated by the following examples.

Example (1) (i) A owns all 100 outstanding shares of L stock. A sells 11 shares to B on January 1, 1986. The January 1, 1986 testing date is disregarded under paragraph (m)(3) of this section. A sells another 40 shares to B on

January 1, 1988. B's second stock purchase is an owner shift that does not result in an ownership change. B's percentage ownership interest on the testing date (51 percent) is only 40 percentage points greater than the lowest percentage of L stock owned by B at any time during the testing period (11 percent on and after May 6, 1986).

(ii) The facts are the same as in (i). In addition A sells 20 shares of his L stock to C on July 1, 1990. C's stock purchase is an owner shift. Because B and C together have increased their respective ownership interests in L by 40 and 20 percentage points relative to their lowest percentage stock ownership interests in L at any time during the testing period, C's purchase causes an ownership change. The testing period for any subsequent ownership change begins on the first day following C's acquisition, July 2, 1990.

Example (2) (i) C has owned 100 percent of L since March 22, 1980. On October 13, 1986, P merges into L. As a result of the merger, 40 percent of L stock is acquired by A, the sole shareholder of P. The merger of P into L is both an equity structure shift and an owner shift. The transaction, however, is not an ownership change with respect to L, because A's percentage ownership interest has increased by only 40 percentage points. On August 22, 1987, B purchases 15 percent of the L stock from C. B's purchase constitutes an owner shift resulting in an ownership change that is subject to section 382 because the aggregate increases in percentage ownership by B and C (respectively 40 percent and 15 percent) is more than 50 percentage points.

(ii) The facts are the same as in (i), except that the plan of reorganization is adopted on October 13, 1986, and the merger is completed on July 22, 1987. The result is the same as in (i).

(iii) The facts are the same as in (ii), except that the reorganization is completed on August 22, 1987, and B's purchase of the L stock occurs one month earlier, on July 22, 1987. Assume that after the reorganization on August 22, 1987, A and B own 40 percent and 15 percent, respectively, of L stock. Although the merger occurred pursuant to a plan of reorganization adopted before 1987, L is subject to section 382 following the equity structure shift, because the merger would not have caused an ownership change if it had been completed in 1986 after the commencement of the L's testing period.

(iv) The facts are the same as in (ii), except that B's purchase occurs on June 7, 1986. Assume that immediately after the reorganization on August 22, 1987, A and B own 40 percent and 15 percent, respectively, of L stock. Since the reorganization pursuant to a plan adopted before 1987, taken together with the other shifts in the ownership of L's stock between May 5, 1986, and December 31, 1986, would have caused an ownership change, section 382 does not apply as a result of the merger. Since an ownership change occurs as a result of the merger, L's testing period for purposes of any subsequent ownership change begins on October 14, 1986.

(v) The facts are the same as in (iv), except that B makes an additional purchase from C of one percent of L's stock on February 14, 1987. The result is the same as in (iv). B's additional purchase, however, is taken into account for the purpose of determining whether there is a second ownership change with respect to L.

[T.D. 8149, 52 FR 29675, Aug. 11, 1987, as amended by T.D. 8264, 54 FR 38666, Sept. 20, 1989; T.D. 8277, 54 FR 52936, Dec. 26, 1989; T.D. 8352, 56 FR 29434, June 27, 1991; T.D. 8405, 57 FR 10741, Mar. 30, 1992; T.D. 8407, 57 FR 12210, Apr. 9, 1992; T.D. 8428, 57 FR 38282, Aug. 24, 1992; T.D. 8440, 57 FR 45712, Oct. 5, 1992; 57 FR 52827, Nov. 5, 1992; T.D. 8490, 59 FR 51573, Oct. 4, 1993; T.D. 8531, 59 FR 12837, Mar. 18, 1994; T.D. 8679, 61 FR 33315, June 27, 1996]

§ 1.382–3 Definitions and rules relating to a 5-percent shareholder.

(a) *Definitions*—(1) *Entity*—(i) *In general.* An entity is any corporation, estate, trust, association, company, partnership or similar organization. An entity includes a group of persons who have a formal or informal understanding among themselves to make a coordinated acquisition of stock. A principal element in determining if such an understanding exists is whether the investment decision of each member of a group is based upon the investment decision of one or more other members. However, the participation by creditors in formulating a plan for an insolvency workout or a reorganization in a title 11 or similar case (whether as members of a creditors' committee or otherwise) and the receipt of stock by creditors in satisfaction of indebtedness pursuant to the workout or reorganization do not cause the creditors to be considered an entity.

(ii) *Examples.* The following examples illustrate the provisions of paragraph (a)(1)(i) of this section.

Example 1. (i) L corporation has 1,000 shares of common stock outstanding. For the three-year period ending on October 1, 1992, L's stock was owned by unrelated individuals, none of whom owned five percent or more of L. A group of 20 individuals who previously owned no stock (the ''Group'') agree among themselves to acquire more than 5 percent of L's stock. The Group is not a corporation, trust, association, partnership or company.

On October 1, 1992, pursuant to their understanding, the members of the Group purchase 600 shares of L common stock from the old shareholders of L (a total of 60 percent of L stock), with each member purchasing 30 shares.

(ii) Before the members of the Group acquired L's stock on October 1, 1992, no individual or entity owned, directly or indirectly, five percent or more of the stock of L. As a result, all shareholders were aggregated into a public group and L was considered to be owned by a single 5-percent shareholder (''Public L'') in accordance with § 1.382–2T (g)(1) and (j)(1).

(iii) Under paragraph (a)(1)(i) of this section, the members of the Group have a formal or informal understanding among themselves to make a coordinated acquisition of stock and, therefore, the Group is an entity. Thus, the acquisition of more than five percent of the stock of L on October 1, 1992, by members of the Group is not disregarded under § 1.382–2T(e)(1)(ii). Because no member of the Group owns, directly or indirectly, five percent or more of the stock of L, §§ 1.382–2T (g)(1) and (j)(1) require that the members of the Group be aggregated into a separate public group, which will be presumed to consist of persons unrelated to the members of Public L. Because there is a shift of more than fifty percentage points in the ownership of L stock during the three-year testing period ending on October 1, 1992, an ownership change occurs on October 1, 1992, as a result of the Group's purchase of the 600 shares.

Example 2. (i) Prior to October 1, 1992, L's 1,000 shares of outstanding stock were owned by unrelated individuals, none of whom owned five percent or more of the stock of L. L's management is concerned that L may become subject to a takeover bid. In separate meetings, L's management meets with potential investors who own no stock and are friendly to management to convince them to acquire L's stock based on an understanding that L will assemble a group that in the aggregate will acquire more than 50 percent of L's stock. On October 1, 1992, 15 of these investors each purchase 4 percent of L's stock.

(ii) Under paragraph (a)(1)(i) of this section, the 15 investors (the ''Group'') are treated as an entity because the members of the Group purchase L stock pursuant to a formal or informal understanding among themselves to make a coordinated acquisition of stock. Sections 1.382–2T (g)(1) and (j)(1) require that on October 1, 1992, the Group be aggregated into a separate public group, which has increased its ownership of L stock by 60 percentage points over its lowest level of ownership in the three-year period ending on October 1, 1992. Accordingly, an ownership change occurs on that date.

Example 3. (i) Prior to October 1, 1992, L's 1,000 shares of outstanding stock were owned by unrelated individuals, none of whom owned five percent or more of the stock of L. On October 1, 1992, an investment advisor advises its clients that it believes L's stock is undervalued and recommends that they acquire L stock. Acting on the investment advisor's recommendation, 20 unrelated individuals purchase 6 percent of L's stock in aggregate, with each individual purchasing less than 5 percent. Each client's decision was not based upon the investment decisions made by one or more other clients.

(ii) Because there is no formal or informal understanding among the clients to make a coordinated acquisition of L stock, their purchase of stock is not made by an entity under paragraph (a)(1)(i) of this section. As a result, they remain part of the public group which owns L stock, and no owner shift results upon their purchase of L stock under § 1.382–2T(e)(1)(ii).

(iii) The result in this example would be the same under paragraph (a)(3)(i) of this section if the only additional fact was that the investment advisor is also the underwriter (without regard to whether it is a firm commitment or best efforts underwriting) for a primary or secondary offering of L stock.

(iv) Assume that the facts are the same except that, instead of an investment advisor recommending that clients purchase L stock, the trustee of several trusts qualified under section 401(a) sponsored by unrelated corporations causes each trust to purchase the L stock. In this case, the result is the same, so long as the investment decision made on behalf of each trust was not based on the investment decision made on behalf of one or more of the other trusts.

(iii) *Effective date.* (A) *In general.* The second, third and fourth sentences of paragraph (a)(1)(i) of this section and *Examples 1, 2* and *3* of paragraph (a)(1)(ii) of this section apply to testing dates (determined by applying such sentence and examples) on or after November 20, 1990, but with respect to any group of persons that pursuant to a formal or informal understanding among themselves makes a coordinated acquisition of stock before November 20, 1990, only if the group increases or decreases its ownership of stock of the loss corporation relative to its percentage ownership interest at the close of November 19, 1990, by five percentage points or more on or after November 20, 1990.

(B) *Special rule.* If pursuant to a formal or informal understanding among themselves a group consisting only of regulated investment companies under

section 851, qualified trusts under section 401, common trust funds under section 584, or trusts or estates that are clients of a trust department of a bank under section 581, make a coordinated acquisition of stock before November 20, 1990, the second, third and fourth sentences of paragraph (a)(1)(i) of this section and *Examples 1, 2,* and *3* of paragraph (a)(1)(ii) of this section apply for testing dates (determined by applying such sentences and examples) on or after November 20, 1990, only if the group increases its ownership of stock of the loss corporation relative to its percentage ownership interest at the close of November 19, 1990, by five percentage points or more on or after November 20, 1990.

(C) *Example.* The following example illustrates the provisions of paragraph (a)(1)(iii) of this section.

Example. Prior to November 1, 1990, L, a loss, corporation, is owned entirely by 1,000 unrelated individuals, none of whom owns as much as 5 percent of the stock of L (''Public L''). On November 1, 1990, 15 individuals (the ''Group'') each acquired 3 percent, or 45 percent, in total, of L stock pursuant to an understanding among themselves to make a coordinated acquisition of stock. The Group is not a corporation, trust, association, partnership or company. On March 1, 1992, six members of the Group each purchased an additional one percent of L stock, or 6 percent, in total, pursuant to the understanding. Accordingly, the Group increased its ownership in L stock by 51 percentage points during the three-year testing period ending on March 1, 1992. As a result, an ownership change of L occurs on March 1, 1992.

(2) [Reserved]

(b)—(i) [Reserved]

(j) *Modification of the segregation rules of § 1.382–2T(j)(2)(iii) in the case of certain issuances of stock*—(1) *Introduction.* This paragraph (j) exempts, in whole or in part, certain issuances of stock by a loss corporation from the segregation rules of § 1.382–2T(j)(2)(iii)(B). Terms and nomenclature used in this paragraph (j), and not otherwise defined herein, have the same meanings as in section 382 and the regulations thereunder.

(2) *Small issuance exception*—(i) *In general.* Section 1.382–2T(j)(2)(iii)(B) does not apply to a small issuance (as defined in paragraph (j)(2)(ii) of this section), except to the extent that the total amount of stock issued in that issuance and all other small issuances previously made in the same taxable year (determined in each case on issuance) exceeds the small issuance limitation. This paragraph (j)(2) does not apply to an issuance of stock that, by itself, exceeds the small issuance limitation.

(ii) *Small issuance defined.* ''Small issuance'' means an issuance (other than an issuance described in paragraph (j)(6) of this section) by the loss corporation of an amount of stock not exceeding the small issuance limitation. For purposes of this paragraph (j)(2)(ii), all stock issued in the issuance is taken into account, including stock owned immediately after the issuance by a 5-percent shareholder that is not a direct public group.

(iii) *Small issuance limitation*—(A) *In general.* For each taxable year, the loss corporation may, at its option, apply this paragraph (j)(2)—

(*1*) On a corporation-wide basis, in which case the small issuance limitation is 10 percent of the total value of the loss corporation's stock outstanding at the beginning of the taxable year (excluding the value of stock described in section 1504(a)(4)); or

(*2*) On a class-by-class basis, in which case the small issuance limitation is 10 percent of the number of shares of the class outstanding at the beginning of the taxable year.

(B) *Class of stock defined.* For purposes of this paragraph (j)(2)(iii), a class of stock includes all stock with the same material terms.

(C) *Adjustments for stock splits and similar transactions.* Appropriate adjustments to the number of shares of a class outstanding at the beginning of a taxable year must be made to take into account any stock split, reverse stock split, stock dividend to which section 305(a) applies, recapitalization, or similar transaction occurring during the taxable year.

(D) *Exception.* The loss corporation may not apply this paragraph (j)(2)(iii) on a class-by-class basis if, during the taxable year, more than one class of stock is issued in a single issuance (or in two or more issuances that are treated as a single issuance under paragraph (j)(8)(ii) of this section).

(iv) *Short taxable years.* In the case of a taxable year that is less than 365 days, the small issuance limitation is reduced by multiplying it by a fraction, the numerator of which is the number of days in the taxable year, and the denominator of which is 365.

(3) *Other issuances of stock for cash*—(i) *In general.* If the loss corporation issues stock solely for cash, §1.382–2T(j)(2)(iii)(B) does not apply to such stock in an amount equal (as a percentage of the total stock issued) to one-half of the aggregate percentage ownership interest of direct public groups immediately before the issuance.

(ii) *Solely for cash*—(A) *In general.* A share of stock is not issued solely for cash if—

(*1*) The acquiror, as a condition of acquiring that share for cash, is required to purchase other stock for consideration other than cash; or

(*2*) The share is acquired upon the exercise of an option that was not issued solely for cash or was not distributed with respect to stock.

(B) *Related issuances.* Paragraph (j)(8)(i) of this section (relating to the treatment of one or more issuances as a single issuance) does not apply in determining whether stock is issued solely for cash.

(iii) *Coordination with paragraph (j)(2) of this section.* This paragraph (j)(3) does not apply to a small issuance exempted in whole from §1.382–2T(j)(2)(iii)(B) under paragraph (j)(2) of this section. In the case of a small issuance exempted in part from §1.382–2T(j)(2)(iii)(B) under paragraph (j)(2) of this section, this paragraph (j)(3) applies only to the portion of the issuance not so exempted, and that portion is treated as a separate issuance for purposes of this paragraph (j)(3).

(4) *Limitation on exempted stock.* The total amount of stock that is exempted from the application of §1.382–2T(j)(2)(iii)(B) under paragraphs (j)(2) and (j)(3) of this section cannot exceed the total amount of stock issued in the issuance less the amount of that stock owned by a 5-percent shareholder (other than a direct public group) immediately after the issuance. Except to the extent that the loss corporation has actual knowledge to the contrary, any increase in the amount of the loss corporation's stock owned by a 5-percent shareholder on the day of the issuance is considered to be attributable to an acquisition of stock in the issuance.

(5) *Proportionate acquisition of exempted stock*—(i) *In general.* Each direct public group that exists immediately before an issuance to which paragraph (j)(2) or (j)(3) of this section applies is treated as acquiring its proportionate share of the amount of stock exempted from the application of §1.382–2T(j)(2)(iii)(B) under paragraph (j)(2) or (j)(3) of this section.

(ii) *Actual knowledge of greater overlapping ownership.* Under the last sentence of §1.382–2T(k)(2), the loss corporation may treat direct public groups existing immediately before an issuance to which paragraph (j)(2) or (j)(3) of this section applies as acquiring in the aggregate more stock than the amount determined under paragraph (j)(5)(i) of this section, but only if the loss corporation actually knows that the aggregate amount acquired by those groups in the issuance exceeds the amount so determined.

(6) *Exception for equity structure shifts.* This paragraph (j) does not apply to any issuance of stock in an equity structure shift, except that paragraph (j)(2) of this section applies (if its requirements are met) to the issuance of stock in a recapitalization under section 368(a)(1)(E).

(7) *Transitory ownership by underwriter disregarded.* For purposes of §1.382–2T(g)(1) and (j), and this paragraph (j), the transitory ownership of stock by an underwriter of the issuance is disregarded.

(8) *Certain related issuances.* For purposes of this paragraph (j), two or more issuances (including issuances of stock by first tier or higher tier entities) are treated as a single issuance if—

(i) The issuances occur at approximately the same time pursuant to the same plan or arrangement; or

(ii) A principal purpose of issuing the stock in separate issuances rather than in a single issuance is to minimize or avoid an owner shift under the rules of this paragraph (j).

(9) *Application to options.* The principles of this paragraph (j) apply for purposes of applying §1.382–2T(j)(2)(iii)(D) (relating to the deemed

acquisition of stock as a result of the ownership of an option).

(10) *Issuance of stock pursuant to the exercise of certain options.* If stock is issued on the exercise of a transferable option issued by the loss corporation, § 1.382–2T(j)(2)(iii)(F) does not apply and, in applying the last sentence of § 1.382–2T(k)(2), the loss corporation must take into account any transfers of the option (including transfers described in § 1.382–2T(h)(4)(xi)). Therefore, even if transferable options are distributed pro rata to members of existing public groups, the actual knowledge exception of § 1.382–2T(k)(2) applies only to the extent that the loss corporation actually knows that the persons acquiring stock on exercise of the options are members of a pre-existing public group. Moreover, if transferable options are issued to more than one public group, § 1.382–2T(j)(2)(iii)(F) does not apply to treat the options as exercised pro rata by each such public group as the options are actually exercised.

(11) *Application to first tier and higher tier entities.* The principles of this paragraph (j) apply to issuances of stock by a first tier entity or a higher tier entity that owns 5 percent or more of the loss corporation's stock (determined without regard to § 1.382–2T(h)(2)(i)(A)).

(12) *Certain non-stock ownership interests.* As the context may require, a non-stock ownership interest in an entity other than a corporation is treated as stock for purposes of this paragraph (j).

(13) *Examples.* The provisions of this paragraph (j) are illustrated by the following examples:

Example 1. (i) L corporation is a calendar year taxpayer. On January 1, 1994, L has 1,000 shares of a single class of common stock outstanding, all of which are owned by a single direct public group (Public L). On February 1, 1994, L issues to employees as compensation 60 new common shares of the same class. On May 1, 1994, L issues 50 new common shares of the same class solely for cash. Following each issuance, L's stock is owned entirely by public shareholders. No other changes in the ownership of L's stock occur prior to May 1, 1994. L chooses to determine its small issuance limitation for 1994 on a class-by-class basis under paragraph (j)(2)(iii)(A)(*2*) of this section.

(ii) The February issuance is a small issuance because the number of shares issued (60) does not exceed 100, the small issuance limitation (10 percent of the number of common shares outstanding on January 1, 1994). Under paragraph (j)(2) of this section, the segregation rules of § 1.382–2T(j)(2)(iii)(B) do not apply to the February issuance. Under paragraph (j)(5) of this section, Public L is treated as acquiring all 60 shares issued.

(iii) The May issuance is a small issuance because the number of shares issued (50) does not exceed 100, the small issuance limitation (10 percent of the number of common shares outstanding on January 1, 1994). However, under paragraph (j)(2) of this section, only 40 of the 50 shares issued are exempted from the segregation rules of § 1.382–2T(j)(2)(iii)(B) because the total number of shares of common stock issued in the February and May issuances exceeds 100, the small issuance limitation, by 10. Because the May issuance is solely for cash, paragraph (j)(3) of this section exempts 5 of the 10 remaining shares from the segregation rules of § 1.382–2T(j)(2)(iii)(B) (10 shares multiplied by 50 percent, one-half of Public L's 100 percent ownership interest immediately before the May issuance—1,060 shares/1,060 shares). Accordingly, under paragraph (j)(5) of this section, Public L is treated as acquiring 45 shares in the May issuance. Section 1.382–2T(j)(2)(iii)(B) applies to the remaining 5 shares issued, which are treated as acquired by a direct public group separate from Public L. Each such public group is treated as an individual who is a separate 5-percent shareholder. See § 1.382–2T (g)(1)(iv) and (j)(1)(ii).

(iv) Assume that L actually knows that at least 10 shares of the May issuance are acquired by members of Public L. The result is the same. See paragraph (j)(5)(ii) of this section.

(v) Assume instead that L actually knows that all 50 shares of the May issuance are acquired by members of Public L. Under paragraph (j)(5)(ii) of this section, L may treat Public L as acquiring 50 shares in the May issuance.

Example 2. (i) L corporation is a calendar year taxpayer. On January 1, 1995, L has 1,000 shares of Class A common stock outstanding, the aggregate value of which is $1,000. Five hundred shares are owned by one direct public group (Public 1), and 500 shares are owned by another direct public group (Public 2). On August 1, 1995, L issues 200 shares of Class B common stock for $200 cash. A, an individual, acquires 120 Class B shares in the transaction. The remaining 80 Class B shares are acquired by public shareholders. No other changes in ownership of L's stock occur prior to August 1, 1995.

(ii) The August issuance is not a small issuance. The total value of the Class B stock issued ($200) exceeds $100, the small issuance limitation as calculated under paragraph (j)(2)(iii)(A)(*1*) of this section (10 percent of the value of L's stock on January 1, 1995). The total number of Class B shares issued

(200) exceeds 0, the small issuance limitation as calculated under paragraph (j)(2)(iii)(A)(*2*) of this section (10 percent of the number of Class B shares outstanding on January 1, 1995). Accordingly, paragraph (j)(2) of this section does not apply to the August issuance.

(iii) Paragraph (j)(3) of this section, as limited by paragraph (j)(4) of this section, exempts 80 Class B shares from the segregation rule of §1.382–2T(j)(2)(iii)(B). Paragraph (j)(3) of this section, without regard to paragraph (j)(4) of this section, would exempt 100 Class B shares: the product of the 200 Class B shares issued and 50 percent (one-half of the combined 100 percent pre-issuance ownership interest of Public 1 and Public 2). Paragraph (j)(4), however, limits the total number of Class B shares that may be excluded to 80 Class B shares: the difference between the 200 shares issued and the 120 shares acquired by A. Under paragraph (j)(5) of this section, Public 1 and Public 2 are treated as acquiring the 80 exempted Class B shares. Because Public 1 and Public 2 each owned 500 Class A shares prior to the issuance, Public 1 and Public 2 are considered to acquire 40 Class B shares each.

Example 3. (i) L has 1,000 shares of a single class of common stock outstanding, all of which are owned by a direct public group (Public L). At the same time pursuant to the same plan, L issues 500 shares of its stock to its creditors in exchange for its outstanding debt and 500 shares of its stock to the public for cash. Assume that the separate issuances of stock for debt and stock for cash do not have a principal purpose of minimizing or avoiding an owner shift. L has no individual 5-percent shareholders immediately after the issuances.

(ii) The 500 shares of stock issued by L to its former creditors were not issued solely for cash. Therefore, paragraph (j)(3) of this section does not apply to those 500 shares, which are treated as owned by a public group separate from Public L. See §1.382–2T(j)(2)(iii)(B)(*1*)(*ii*).

(iii) Paragraph (j)(3) of this section applies to the 500 shares of stock issued by L to the public because that stock was issued solely for cash. Because the two issuances occur at the same time pursuant to the same plan, they are generally treated as a single issuance for purposes of this paragraph (j). See paragraph (j)(8)(i) of this section. The treatment of the two issuances as a single issuance does not apply, however, for the purpose of determining whether the stock issued to the public was issued solely for cash. See paragraph (j)(3)(ii)(B) of this section.

(iv) Paragraph (j)(3) of this section applies to exempt 250 of the 500 shares issued solely for cash from the segregation rules of §1.382–2T(j)(2)(iii)(B) (the product of the 500 shares issued for cash and 50 percent (one-half of the 100 percent pre-issuance ownership interest of Public L)). The creditors that receive stock in exchange for their debt would not be treated as acquiring any of the 250 exempted shares even if their exchange of debt for stock occurs prior to the cash issuance. Paragraph (j)(5)(i) of this section allocates exempted shares among the direct public groups that exist immediately before an issuance. Because the issuance for cash and the issuance for debt are generally treated as a single issuance, the public group comprised of the former creditors of L was not a public group that existed immediately before the issuance.

(v) Three public groups owning L stock exist immediately after the two issuances. Public L owns 1,250 shares—the 1,000 shares it owned prior to the issuances plus the 250 shares it is treated as acquiring in the cash issuance. A separate group comprised of the former creditors of L owns the 500 shares issued for debt. A third public group owns the 250 shares that are not treated as acquired by Public L in the cash issuance.

Example 4. (i) L has 1,000 shares of a single class of common stock outstanding, all of which are owned by a direct public group (Public L). L issues 1,000 shares pursuant to an offer under which 500 shares must be acquired in exchange for debt and the remainder may be acquired for cash. Under the terms of the offer, only persons that acquire stock for debt are eligible to acquire stock for cash. L has no 5-percent shareholders other than direct public groups immediately after the issuance.

(ii) As a condition of acquiring shares for cash, the creditors are required to purchase stock for debt. Therefore, paragraph (j)(3) of this section does not apply to any part of the issuance because it is not an issuance of stock solely for cash. The segregation rules of §1.382–2T(j)(2)(iii)(B) apply to treat all 1,000 shares as acquired by a new public group separate from Public L.

(14) *Effective date*—(i) *In general.* Except as otherwise provided in this paragraph (j)(14), this paragraph (j) applies to issuances or deemed issuances of stock in taxable years beginning on or after November 4, 1992.

(ii) *Effective date for paragraph (j)(10) of this section.* Paragraph (j)(10) of this section applies to stock issued on the exercise of an option issued on or after November 4, 1992, unless the option was issued before May 4, 1993, and the issuer, on or before November 4, 1992, filed a registration statement with the Securities and Exchange Commission (or a comparable document with a State agency regulating securities) for the specific purpose of such issuance.

(iii) *Election to apply this paragraph (j) retroactively*—(A) *Election.* A loss corporation may elect to apply paragraphs (j)(1) through (j)(13) of this section to all issuances or deemed issuances of stock to which § 1.382–2T(j)(2)(iii)(B) or (D) applied (or would have applied taking paragraph (j)(7) of this section into account) occurring in taxable years beginning prior to November 4, 1992. This election is made by filing with the loss corporation's first income tax return filed more than 60 days after October 4, 1993, the statement, ''This is an Election to Apply § 1.382–3(j) Retroactively,'' accompanied by the amended returns and revised information statements described in paragraphs (j)(14)(iii)(B) and (C) of this section. An election under this paragraph (j)(14)(iii) is irrevocable.

(B) *Amended returns.* If the retroactive application of the rules of this paragraph (j) affects the amount of taxable income or loss for a prior taxable year, then, except as precluded by the applicable statute of limitations, the loss corporation (or the common parent of any consolidated group of which the loss corporation was a member for the year) must file an amended return for the year that reflects the effects of the retroactive application of the rules of this paragraph (j). If the statute of limitations precludes the filing of an amended return for one or more such prior taxable years, the loss corporation (or the common parent) must make appropriate adjustments under the principles of section 382(l)(2)(A) in subsequent taxable years to reflect the difference between the losses and credits actually used in such prior taxable years and the amount that would have been used in those years applying the rules of this paragraph (j).

(C) *Revised information statements.* If the retroactive application of the rules of this paragraph (j) affects the information reported on an information statement filed for any prior taxable year pursuant to § 1.382–2T(a)(2)(ii), then the loss corporation (or the common parent of any consolidated group of which the loss corporation was a member for the year) must file a revised information statement for the year that reflects the retroactive application of the rules of this paragraph (j).

(k) *Special rules for certain regulated investment companies*—(1) *In general.* The segregation rules of § 1.382–2T(j)(2) do not apply to the issuance (as described in § 1.382–2T(j)(2)(iii)(B)(1)(*ii*)) or the redemption (as described in § 1.382–2T(j)(2)(iii)(C)) of any redeemable security, as defined in 15 U.S.C. 80a–2(a)(32), by a regulated investment company in the ordinary course of business.

(2) *Effective date*—(i) *General rule.* Paragraph (k)(1) of this section applies to testing dates after December 31, 1986. A corporation may file an amended return for taxable years ending before August 21, 1992 (subject to any applicable statute of limitations) to take into account paragraph (k)(1) of this section only if corresponding adjustments are made in amended returns for all affected taxable years ending after December 31, 1986 (subject to any applicable statute of limitations).

(ii) *Election to apply prospectively.* A corporation may elect to apply paragraph (k)(1) of this section only to testing dates on or after October 29, 1991. The election must be made on the first return which is filed after October 20, 1992 by stating on such return, ''This is an Election To Apply § 1.382–3(k)(1) Only to Testing Dates on or After October 29, 1991.''

[T.D. 8428, 57 FR 38282, Aug. 24, 1992. Redesignated by T.D. 8440, 57 FR 45712, Oct. 5, 1992; 57 FR 52827, Nov. 5, 1992; T.D. 8490, 59 FR 51573, Oct. 4, 1993]

§ 1.382–4 Constructive ownership of stock.

(a) *In general.* [Reserved]

(b) *Attribution from corporations, partnerships, estates and trusts.* [Reserved]

(c) *Attribution to corporations, partnerships, estates and trusts.* [Reserved]

(d) *Treatment of options as exercised*—(1) *General rule.* Except as provided in paragraph (d)(2) of this section, an option is not treated as exercised under section 382(l)(3)(A).

(2) *Options treated as exercised*—(i) *Issuance or transfer.* For purposes of determining whether an ownership change occurs, an option is treated as exercised on the date of its issuance or transfer if, on that date, the option satisfies—

(A) The ownership test of paragraph (d)(3) of this section,

(B) The control test of paragraph (d)(4) of this section, or

(C) The income test of paragraph (d)(5) of this section.

(ii) *Subsequent testing dates.* Except as provided in paragraph (d)(10) of this section, an option that is treated as exercised on the date of its issuance or transfer is treated as exercised on any subsequent testing date (as defined in § 1.382–2(a)(4)) for purposes of determining whether an ownership change occurs.

(3) *The ownership test.* An option satisfies the ownership test if a principal purpose of the issuance, transfer, or structuring of the option (alone or in combination with other arrangements) is to avoid or ameliorate the impact of an ownership change of the loss corporation by providing the holder of the option, prior to its exercise or transfer, with a substantial portion of the attributes of ownership of the underlying stock.

(4) *The control test*—(i) *In general.* An option satisfies the control test if—

(A) A principal purpose of the issuance, transfer, or structuring of the option (alone or in combination with other arrangements) is to avoid or ameliorate the impact of an ownership change of the loss corporation, and

(B) The holder of the option and any persons related to the option holder have, in the aggregate, a direct and indirect ownership interest in the loss corporation of more than 50 percent (determined as if the increase in such persons' percentage ownership interest that would result from the exercise of the option in question and any other options to acquire stock held by such persons, and any other intended increases in such persons' percentage ownership interest, actually occurred on the date the option is issued or transferred).

(ii) *Operating rules*—(A) *Person and related persons.* For purposes of this paragraph (d)(4)—

(*1*) The term *person* includes an individual or entity, but not a public group, as defined in § 1.382–2T(f)(13), and

(*2*) Persons are related if they bear a relationship specified in section 267(b) or 707(b) or if they have a formal or informal understanding among themselves to make a coordinated acquisition of stock, within the meaning of § 1.382–3(a)(1)(i).

(B) *Indirect ownership interest.* The indirect ownership interest that the holder of the option and any persons related to the holder have in the loss corporation is determined by applying the constructive ownership rules of § 1.382–2T(h), other than § 1.382–2T(h)(2)(i)(A) (which treats stock attributed pursuant to section 318(a)(2) as no longer being owned by the entity from which it is attributed) and § 1.382–2T(h)(4) (which treats options as exercised in certain circumstances). If, however, the application of such constructive ownership rules without regard to § 1.382–2T(h)(2)(i)(A) would result in the same stock of the loss corporation being owned by two or more such persons, appropriate adjustments must be made so that such stock is not counted more than once in computing the aggregate ownership interests of such persons.

(5) *The income test.* An option satisfies the income test if a principal purpose of the issuance, transfer, or structuring of the option (alone or in combination with other arrangements) is to avoid or ameliorate the impact of an ownership change of the loss corporation by facilitating the creation of income (including accelerating income or deferring deductions) or value (including unrealized built-in gains) prior to the exercise or transfer of the option.

(6) *Application of the ownership, control, and income tests*—(i) *In general.* Whether an option satisfies the ownership, control, or income test depends on all the relevant facts and circumstances. Among the factors that are relevant in applying all three tests are any business purposes for the issuance, transfer, or structure of the option, the likelihood of exercise of the option (taking into account, for example, any contingencies to its exercise), transactions related to the issuance or transfer of the option, and the consequences of treating the option as exercised.

An option is not treated as exercised under any of the three tests, however, if a principal purpose of its issuance, transfer, or structuring is to avoid an ownership change by having it treated as exercised. Paragraphs (d)(6)(ii), (iii)

and (iv) of this section describe additional examples of factors that are relevant in applying each test. The weight given to any factor depends on all the facts and circumstances. The presence or absence of any factor described in this paragraph (d)(6) does not create a presumption.

(ii) *Application of ownership test.* Among the additional factors that are taken into account in applying the ownership test are the relationship, at the time of issuance or transfer of the option, between the exercise price of the option and the value of the underlying stock, whether the option provides its holder or a related person with the right to participate in the management of the loss corporation or with other rights that ordinarily would be afforded to owners of the underlying stock, and the existence of reciprocal options (e.g., a call option held by the prospective purchaser and a corresponding put option held by the prospective seller). The ability of the holder of an option with a fixed exercise price to share in future appreciation of the underlying stock is also a relevant factor, but is not sufficient, by itself, for the option to satisfy the ownership test. Conversely, the fact that the holder of such an option does not bear the risk of loss due to declines in value of the underlying stock does not preclude the option from satisfying the ownership test.

(iii) *Application of control test.* Among the additional factors that are taken into account in applying the control test are the economic interests in the loss corporation of the option holder or related persons and the influence of those persons over the management of the loss corporation (in either case, through the option or a related arrangement, or through rights in stock).

(iv) *Application of income test.* Among the additional factors that are taken into account in applying the income test are whether, in connection with the issuance or transfer of the option, the loss corporation engages in income acceleration transactions or the holder of the option or a related person purchases stock (including section 1504(a)(4) stock) from, or makes a capital contribution or loan to, the loss corporation that can reasonably be expected to avoid or ameliorate the impact of an ownership change. Examples of income acceleration transactions are those outside the ordinary course of the loss corporation's business that accelerate income or gain into the period prior to the exercise of the option (or defer deductions to the period after the exercise of the option). A stock purchase, capital contribution, or loan is more probative toward an option satisfying the income test the larger the amount received by the loss corporation in the transaction or related transactions. A stock purchase, capital contribution, or loan is generally not taken into account in applying the income test if it is made to enable the loss corporation to continue basic operations of its business (*e.g.*, to meet the monthly payroll or fund other operating expenses of the loss corporation).

(7) *Safe harbors.* Except as provided in paragraph (d)(7)(i) of this section, an option described in this paragraph (d)(7) is not treated as exercised pursuant to the ownership, control, or income test. The failure of an option to be described in this paragraph (d)(7) does not affect the determination of whether the option satisfies the ownership, income, or control test. The following options are described in this paragraph (d)(7):

(i) *Contracts to acquire stock.* A stock purchase agreement or a similar arrangement, the terms of which are commercially reasonable, in which the parties' obligations to complete the transaction are subject only to reasonable closing conditions, and which is closed on a change date within one year after it is entered into. An option is not exempt from the income test of paragraph (d)(5) of this section solely by reason of its description in this paragraph (d)(7)(i).

(ii) *Escrow, pledge, or other security agreements.* An option that is part of a security arrangement in a typical lending transaction (including a purchase money loan), if the arrangement is subject to customary commercial conditions. For this purpose, a security arrangement includes, for example, an agreement for holding stock in escrow or under a pledge or other security agreement, or an option to acquire

stock contingent upon a default under a loan.

(iii) *Compensatory options.* An option to acquire stock in a corporation with customary terms and conditions provided to an employee, director, or independent contractor in connection with the performance of services for the corporation or a related person (and that is not excessive by reference to the services performed) and which—

(A) Is nontransferable within the meaning of § 1.83–3(d); and

(B) Does not have a readily ascertainable fair market value as defined in § 1.83–7(b) on the date the option is issued.

(iv) *Options exercisable only upon death, disability, mental incompetency, or retirement.* An option entered into between stockholders of a corporation (or a stockholder and the corporation) with respect to stock of either stockholder, that is exercisable only upon the death, disability, mental incompetency of the stockholder, or, in the case of stock acquired in connection with the performance of services for the corporation or a related person (and that is not excessive by reference to the services performed), the stockholder's retirement.

(v) *Rights of first refusal.* A bona fide right of first refusal with customary terms, entered into between stockholders of a corporation (or between the corporation and a stockholder), and regarding the corporation's stock.

(vi) *Options designated in the Internal Revenue Bulletin.* An option designated by the Internal Revenue Service in the Internal Revenue Bulletin as being exempt from one or more of the ownership, control, or income tests. See § 601.601(d)(2)(ii) of this chapter (relating to the Internal Revenue Bulletin).

(8) *Additional rules*—(i) *Contracts to acquire stock.* For purposes of this paragraph (d), a contract is considered to be issued or transferred on the date it is entered into or assigned, respectively.

(ii) *Indirect transfer of an option.* If an entity is formed or availed of for a principal purpose of facilitating an indirect transfer of an option by issuing or transferring interests in the entity, an issuance or transfer of an interest in the entity will be treated as a transfer of the option for purposes of applying the ownership, control, and income tests of paragraphs (d)(3) through (5) of this section.

(iii) *Options related to interests in non-corporate entities.* The rules of this paragraph (d) apply, with appropriate adjustments, to options to acquire or transfer interests in non-corporate entities.

(iv) *Puts.* In applying the rules of this section to puts, appropriate adjustments must be made to take into account that the put provides its holder with a right to transfer, instead of acquire, stock.

(9) *Definition of option*—(i) *In general.* Any contingent purchase, warrant, convertible debt, put, stock subject to a risk of forfeiture, contract to acquire stock, or similar interest is treated as an option for purposes of this paragraph (d), regardless of whether it is contingent or otherwise not currently exercisable.

(ii) *Convertible stock.* Convertible stock is treated as an option for purposes of this paragraph (d) (in addition to being treated as stock under § 1.382–2(a)(3)(ii)) only if the terms of the conversion feature permit or require consideration other than the stock being converted.

(iii) *Series of options.* For purposes of this paragraph (d), an option to acquire an option with respect to the stock of the loss corporation, and each one of a series of such options, is treated as an option to acquire such stock.

(iv) *General principles of tax law.* This paragraph (d) does not affect the determination under general principles of tax law (such as substance over form) of whether an instrument is an option or stock.

(10) *Subsequent treatment of options treated as exercised on a change date*—(i) *In general.* The following rules apply to options that are treated as exercised under paragraph (d)(2) of this section on a change date:

(A) The option is not treated as exercised under paragraph (d)(2) of this section on any testing date after the change date and prior to a transfer of the option that would itself (*i.e.,* without regard to the purposes for the issuance or any prior transfers of the option) cause the option to satisfy the ownership test of paragraph (d)(3) of

this section, the control test of paragraph (d)(4) of this section, or the income test of paragraph (d)(5) of this section; and

(B) The exercise of the option, if by the person who owned the option immediately after the ownership change (or by a transferee of the option who acquired the option, directly or indirectly, from that person in one or more transfers described in paragraph (d)(11) of this section), does not contribute to another ownership change on any testing date on or after the date of exercise.

(ii) *Alternative look-back rule for options exercised within 3 years after change date.* If a loss corporation, on its return, as originally filed, for a taxable year that includes a change date, properly treats an option as exercised under paragraph (d)(2) of this section on the change date, and the option is actually exercised within three years after the change date, the loss corporation may treat the rules of paragraph (d)(10)(i) of this section as inapplicable to the option and instead treat the option as having been exercised on the change date for the purpose of determining whether an ownership change occurs on any and all testing dates after the change date (filing such amended returns as may be necessary for taxable years ending after the change date and before the date of exercise of the option). A transfer after the change date of an option to which this paragraph (d)(10)(ii) applies is treated as a transfer of the stock subject to the option. The exercise of an option to which this paragraph (d)(10)(ii) applies is not taken into account for the purpose of determining whether an ownership change occurs on or after the date of exercise.

(11) *Transfers not subject to deemed exercise.* Paragraph (d)(2) of this section does not apply to the transfer of an option (including a transfer described in paragraph (d)(8)(i) or (ii) of this section), if—

(i) Neither the transferor nor the transferee is a 5-percent shareholder and neither person would be a 5-percent shareholder if all options held by that person to acquire stock were treated as exercised;

(ii) The transfer is between members of separate public groups resulting from the application of the segregation rules of § 1.382–2T(j)(2) and (3)(iii); or

(iii) The transfer occurs in any of the circumstances described in section 382(l)(3)(B) (relating to stock acquired by reason of death, gift, divorce, separation, etc.).

(12) *Certain rules regarding non-stock interests as stock.* Section 1.382–2T(f)(18)(iii) does not apply to treat an option (whether or not treated as exercised under this paragraph (d)) as stock.

(e) *Stock transferred under certain agreements.* [Reserved]

(f) *Family attribution.* [Reserved]

(g) *Definitions.* The terms and nomenclature used in this section, and not otherwise defined herein, have the same meaning as in section 382 and the regulations thereunder.

(h) *Effective date*—(1) *In general.* [Reserved]

(2) *Option attribution rules*—(i) *General rule.* The rules of paragraph (d) of this section apply, instead of the rules of § 1.382–2T(h)(4), on any testing date on or after November 5, 1992. See paragraph (h)(2)(vi) of this section for an election relating to the effective date.

(ii) *Special rule for control test.* An option issued on or before March 17, 1994, or an option issued within 60 days after that date pursuant to a plan existing before that date, is not treated as exercised under the control test provided in paragraph (d)(4) of this section on any testing date prior to a transfer of the option after March 17, 1994 that would itself cause the option to satisfy the control test.

(iii) *Convertible stock issued prior to July 20, 1988*—(A) *In general.* Except as provided in paragraph (h)(2)(iii)(B) of this section, convertible stock issued prior to July 20, 1988, is not treated as an option subject to the rules of § 1.382–2T(h)(4) or paragraph (d)(2) of this section.

(B) *Exceptions*—(1) *Nonvoting convertible preferred stock.* Convertible stock issued prior to July 20, 1988, is treated as an option subject to the rules of § 1.382–2T(h)(4) or paragraph (d)(2) of this section if—

(*i*) The stock, when issued, would be described in section 1504(a)(4) by disregarding subparagraph (D) thereof and by ignoring the potential participation in corporate growth that the conversion feature may offer; and

(*ii*) The loss corporation makes the election described in Notice 88–67, 1988–1 C.B. 555 (see § 601.601(d)(2)(ii)(*b*) of this chapter for availability of Cumulative Bulletins (C.B.)), on or before the earlier of the date prescribed in Notice 88–67 or December 7, 1992.

(*2*) *Other convertible stock.* Convertible stock issued prior to July 20, 1988, is treated as an option subject to the rules of § 1.382–2T(h)(4) or paragraph (d)(2) of this section if—

(*i*) The terms of the conversion feature permit or require the tender of consideration other than the stock being converted; and

(*ii*) The loss corporation makes the election described in Notice 88–67 on or before the date prescribed in the Notice.

(iv) *Convertible stock issued on or after July 20, 1988, and before November 5, 1992.* Convertible stock issued on or after July 20, 1988, and before November 5, 1992, is treated as an option subject to the rules of § 1.382–2T(h)(4) or paragraph (d) of this section only if—

(A) The stock, when issued, would be described in section 1504(a)(4) by disregarding subparagraph (D) thereof and by ignoring the potential participation in corporate growth that the conversion feature may offer; or

(B) The terms of the conversion feature permit or require the tender of consideration other than the stock being converted.

(v) *Certain options in existence immediately before and after an ownership change.* If an option existed immediately before and after an ownership change occurring on a testing date to which § 1.382–2T(h)(4) applies—

(A) The option is not treated as exercised under paragraph (d)(2) of this section on any testing date after the change date and prior to a transfer of the option that would itself cause the option to satisfy the ownership test of paragraph (d)(3) of this section, the control test of paragraph (d)(4) of this section, or the income test of paragraph (d)(5) of this section; and

(B) Except as provided in § 1.382–2T(m)(4)(vi) (which relates to the effective date of the rules provided in § 1.382–2T(h)(4) and includes a special rule related to options that are actually exercised within 120 days after they are treated as exercised under that section), the actual exercise of the option, if by the person who owned the option immediately after the ownership change (or by a transferee of the option who acquired the option, directly or indirectly, from that person in one or more transfers described in paragraph (d)(11) of this section), will not contribute to an ownership change on any testing date on or after the date of exercise.

(vi) *Election to apply § 1.382–2T(h)(4)*—(A) *In general.* If a loss corporation makes an election under this paragraph (h)(2)(vi), §§ 1.382–2T(a)(2)(i) and (h)(4) (relating to testing dates and option attribution) apply (instead of the definition of testing date in § 1.382–2(a)(4) and paragraph (d) of this section) for the purpose of determining whether an ownership change occurs—

(*1*) On any testing date on or before May 17, 1994, or

(*2*) In the case of a loss corporation that is under the jurisdiction of a court in a title 11 or similar case filed on or before May 17, 1994, subject to § 1.382–9(o)(1), on any testing date at or before the time the plan of reorganization becomes effective.

(B) *Additional consequences of election.* If a loss corporation makes an election under this paragraph (h)(2)(vi)—

(*1*) In determining whether any convertible preferred stock issued by the loss corporation during the period that the election is in effect is treated as stock or as an option, the convertible preferred stock is treated as if it were issued on November 4, 1992, and

(*2*) The special effective date for the control test provided in paragraph (h)(2)(ii) of this section does not apply to any option with respect to stock of the loss corporation.

(C) *Time and manner of making the election.* The election described in paragraph (h)(2)(vi)(A) of this section is made by attaching a statement to the loss corporation's income tax return for the first taxable year ending after November 4, 1992, in which a testing

date (within the meaning of § 1.382–2T(a)(2)(i)) occurs, or if such return is filed on or before May 17, 1994, with its first return filed after May 17, 1994. However, a loss corporation that is under the jurisdiction of a court in a title 11 or similar case filed on or before May 17, 1994, may make the election described in paragraph (h)(2)(vi)(A) by attaching a statement to its tax return for its first taxable year ending after that date. The statement must say ''THIS IS AN ELECTION UNDER § 1.382–4(h)(2)(vi) TO APPLY § 1.382–2T(h)(4) ON OR AFTER NOVEMBER 5, 1992.'' Any amended returns required by paragraph (h)(2)(vi)(D) of this section must accompany the return with which the election is made. An election under paragraph (h)(2)(vi)(A) of this section is irrevocable.

(D) *Amended returns.* If an election under this paragraph (h)(2)(vi) affects the amount of taxable income or loss for a prior taxable year, the loss corporation (or the common parent of any consolidated group of which the loss corporation was a member for the year) must file an amended return for the year that reflects the effect of the election.

(3) *Special rule for options subject to attribution under § 1.382–2T(h)(4).* Section § 1.382–2T(h)(4)(i) does not apply to any option designated by the Internal Revenue Service in the Internal Revenue Bulletin as being excepted from the operation of § 1.382–2T(h)(4)(i).

[T.D. 8531, 59 FR 12837, Mar. 18, 1994]

§ 1.382–5 Section 382 limitation. [Reserved]

§ 1.382–5T Section 382 limitation (temporary).

(a) *Scope.* Following an ownership change, the section 382 limitation for any post-change year is an amount equal to the value of the loss corporation multiplied by the long-term tax-exempt rate that applies with respect to the ownership change, and adjusted as required by section 382 and the regulations thereunder. See, for example, section 382(b)(2) (relating to the carryforward of unused section 382 limitation), section 382(b)(3)(B) (relating to the section 382 limitation for the post-change year that includes the change date), section 382(m)(2) (relating to short taxable years), and section 382(h) (relating to recognized built-in gains and section 338 gains).

(b) *Computation of value.* [Reserved]

(c) *Short taxable year.* The section 382 limitation for any post-change year that is less than 365 days is the amount that bears the same ratio to the section 382 limitation determined under section 382(b)(1) as the number of days in the post-change year bears to 365. The section 382 limitation, as so determined, is adjusted as required by section 382 and the regulations thereunder. This paragraph (c) does not apply to a 52–53 week taxable year that is less than 365 days unless a return is required under section 443 (relating to short periods) for such year.

(d) *Successive ownership changes and absorption of a section 382 limitation*—(1) *In general.* If a loss corporation has two (or more) ownership changes, any losses attributable to the period preceding the earlier ownership change are treated as pre-change losses with respect to both ownership changes. Thus, the later ownership change may result in a lesser (but never in a greater) section 382 limitation with respect to such losses. In any case, the amount of taxable income for any post-change year that can be offset by pre-change losses may not exceed the section 382 limitation for such ownership change, reduced by the amount of taxable income offset by pre-change losses subject to any earlier ownership change(s).

(2) *Recognized built-in gains and losses.* [Reserved]

(3) *Effective date.* This paragraph (d) applies to taxable years of a loss corporation beginning on or after January 1, 1997.

(e) *Controlled groups.* See § 1.382–8T for rules for determining the value of a loss corporation that is a member of a controlled group.

(f) *Effective date.* Except as otherwise provided, this section applies to a loss corporation that has an ownership change to which section 382(a), as amended by the Tax Reform Act of 1986, applies.

[T.D. 8679, 61 FR 33316, June 27, 1996]

§ 1.382–6 Allocation of income and loss to periods before and after the change date for purposes of section 382.

(a) *General rule.* Except as provided in paragraphs (b) and (d) of this section, a loss corporation must allocate its net operating loss or taxable income (see section 382(k)(4)), and its net capital loss (see section 1222(10)) or modified capital gain net income (as defined in paragraph (g)(4) of this section), for the change year between the pre-change period and the post-change period by ratably allocating an equal portion to each day in the year.

(b) *Closing-of-the-books election*—(1) *In general.* Subject to paragraphs (b)(3)(ii) and (d) of this section, a loss corporation may elect to allocate its net operating loss or taxable income and its net capital loss or modified capital gain net income for the change year between the pre-change period and the post-change period as if the loss corporation's books were closed on the change date. An election under this paragraph (b)(1) does not terminate the loss corporation's taxable year as of the change date (e.g., the change year is a single tax year for purposes of section 172).

(2) *Making the closing-of-the-books election*—(i) *Time and manner.* A loss corporation makes the closing-of-the-books election by including the following statement on the information statement required by § 1.382–2T(a)(2)(ii) for the change year: ''THE CLOSING-OF-THE-BOOKS ELECTION UNDER § 1.382–6(b) IS HEREBY MADE WITH RESPECT TO THE OWNERSHIP CHANGE OCCURRING ON [INSERT DATE].'' The election must be made on or before the due date (including extensions) of the loss corporation's income tax return for the change year.

(ii) *Election irrevocable.* An election under this paragraph (b) is irrevocable.

(3) *Special rules relating to consolidated and controlled groups*—(i) *Consolidated groups.* If an election under this paragraph (b) is made with respect to an ownership change occurring in a consolidated return year, all allocations under this section with respect to that ownership change must be consistent with the election.

(ii) *Controlled groups.* If paragraph (b)(3)(i) of this section does not apply, and if, as part of the same plan or arrangement, two or more members of a controlled group (as defined in section 1563(a), determined by substituting ''50 percent'' for ''80 percent'' each place that it appears, and without regard to section 1563(a)(4)), have ownership changes and continue to be members of the controlled group (or become members of the same other controlled group), a closing-of-the-books election applies only if the election is made by all members having the ownership changes.

(c) *Operating rules for determining net operating loss, taxable income, net capital loss, modified capital gain net income, and special allocations.* For purposes of this section, for the change year—

(1) *In general*—(i) Net operating loss or taxable income is determined without regard to gains or losses on the sale or exchange of capital assets; and

(ii) Net operating loss or taxable income and net capital loss or modified capital gain net income are determined without regard to the section 382 limitation and do not include the following items, which are allocated entirely to the post-change period—

(A) Any income, gain, loss, or deduction to which section 382(h)(5)(A) applies; and

(B) Any income or gain recognized on the disposition of assets transferred to the loss corporation during the post-change period for a principal purpose of ameliorating the section 382 limitation.

(2) *Adjustment to net operating loss*—(i) *Determination of remaining capital gain.* The amount of modified capital gain net income (defined in paragraph (g)(4) of this section) allocated to each period is offset by capital losses to which section 382(h)(5)(A) applies and capital loss carryovers, subject to the section 382 limitation (in the case of modified capital gain net income allocated to the post-change period).

(ii) *Reduction of net operating loss by remaining capital gain.* The amount of net operating loss allocated to each period is reduced (but not below zero) without regard to the section 382 limitation, first by the modified capital gain net income remaining in the same

period, and then by the modified capital gain net income remaining in the other period.

(d) *Coordination with rules relating to the allocation of income under § 1.1502–76(b).* If § 1.1502–76 applies (relating to the taxable year of members of a consolidated group), an allocation of items under paragraph (a) or (b) of this section is determined after applying § 1.1502–76. Thus, if a short taxable year under § 1.1502–76 is a change year for which an allocation under this section is to be made, the allocation under this section applies only to the items allocated to that short taxable year under § 1.1502–76.

(e) *Allocation of certain credits.* The principles of this section apply for purposes of allocating, under section 383, excess foreign taxes under section 904(c), current year business credits under section 38, and the minimum tax credit under section 53. The loss corporation must use the same method of allocation (ratable allocation or closing-of-the-books) for purposes of sections 382 and 383.

(f) *Examples.* The rules of this section are illustrated by the following examples:

Example 1. (i) Assume that the loss corporation, L, a calendar year taxpayer with a May 26, 1995, change date, determines a section 382 limitation under section 382(b)(1) of $100,000. Thus, for the change year, its section 382 limitation is $100,000 × (219/365)=$60,000. L makes the closing-of-the-books election under paragraph (b) of this section.

(ii) Assume that L has a $150,000 capital loss carryover (from its 1994 taxable year) and a $300,000 net operating loss carryover (from its 1994 taxable year) to the change year. L recognizes, in the pre-change period, $200,000 of ordinary loss, and, in the post-change period, $150,000 of capital gain and $100,000 of ordinary income. Assume that section 382(h) does not apply to the capital gain or the ordinary income.

(iii) L has a $100,000 net operating loss for the change year ($200,000 pre-change loss less $100,000 post-change income), as determined under paragraph (c)(1)(i) of this section. Because L has no current year capital losses, L's $150,000 capital gain recognized in the post-change period is its modified capital gain net income for the change year (as defined at paragraph (g)(4) of this section). L allocates $100,000 of net operating loss to the pre-change period and $150,000 of modified capital gain net income to the post-change period.

(iv) Under paragraph (c)(2)(i) of this section, L uses its capital loss carryover to offset its modified capital gain net income allocated to the post-change period, subject to its section 382 limitation. L's section 382 limitation is $60,000, so L uses $60,000 of its capital loss carryover to offset $60,000 of its $150,000 modified capital gain net income. L has absorbed its entire section 382 limitation for the change year and has $90,000 of modified capital gain net income remaining in the post-change period.

(v) Under paragraph (c)(2)(ii) of this section, L offsets its $100,000 net operating loss allocated to the pre-change period by the $90,000 of modified capital gain net income remaining in the post-change period, without regard to the section 382 limitation, thereby reducing its pre-change net operating loss to $10,000.

(vi) From its 1994 taxable year, L will carry over $90,000 of capital loss and $300,000 of net operating loss to its 1996 taxable year. From its 1995 taxable year, L will carry over $10,000 of net operating loss subject to the section 382 limitation to its 1996 taxable year.

Example 2. (i) Assume the facts of *Example 1,* except that L does not make the closing-of-the-books election under paragraph (b) of this section.

(ii) L ratably allocates its $100,000 net operating loss and its $150,000 of modified capital gain net income for the change year. $40,000 of net operating loss ($100,000 × (146/365)) and $60,000 of modified capital gain net income ($150,000 × (146/365)) are allocated to the pre-change period. $60,000 of net operating loss ($100,000 × (219/365)) and $90,000 of modified capital gain net income ($150,000 × (219/365)) are allocated to the post-change period.

(iii) Under paragraph (c)(2)(i) of this section, L uses its capital loss carryovers to offset modified capital gain net income. The capital loss carryovers offset the $60,000 modified capital gain net income allocated to the pre-change period without limitation. Subject to the section 382 limitation, the remaining $90,000 of capital loss carryovers offset the modified capital gain net income allocated to the post-change period. Accordingly, L uses $60,000 of its capital loss carryovers to offset $60,000 of its $90,000 modified capital gain net income allocated to the post-change period. L has absorbed its entire section 382 limitation for the change year.

(iv) Under paragraph (c)(2)(ii) of this section, L's $60,000 net operating loss allocated to the post-change period is offset by its remaining $30,000 of post-change modified capital gain net income, reducing its post-change net operating loss to $30,000.

(v) From its 1994 taxable year, L will carry over $30,000 of capital loss and $300,000 of net operating loss to its 1996 taxable year. From

its 1995 taxable year, L will carry over $70,000 of net operating loss ($40,000 pre-change +$30,000 post-change) to its 1996 taxable year. The $40,000 pre-change portion of that carryover is subject to the section 382 limitation.

(g) *Definitions and nomenclature.* The terms and nomenclature used in this section and not otherwise defined herein have the same meanings as in sections 382 and 383 and the regulations thereunder. For purposes of this section:

(1) *Change year.* A loss corporation's taxable year that includes the change date is its *change year.*

(2) *Pre-change period.* The *pre-change period* is the portion of the change year ending on the close of the change date.

(3) *Post-change period.* The *post-change period* is the portion of the change year beginning with the day after the change date.

(4) *Modified capital gain net income.* A loss corporation's *modified capital gain net income* is the excess of the gains from sales or exchanges of capital assets over the losses from such sales or exchanges for the change year, determined by excluding any short-term capital losses under section 1212.

(h) *Effective date.* This section applies to ownership changes occurring on or after June 22, 1994.

[T.D. 8546, 59 FR 32080, June 22, 1994]

§ 1.382–7 Built-in gains and losses. [Reserved]

§ 1.382–8 Controlled groups. [Reserved]

§ 1.382–8T Controlled groups (temporary).

(a) *Introduction.* This section provides rules to adjust the value of a loss corporation that is a member of a controlled group of corporations on a change date so that the same value is not included more than once in computing the limitations under section 382 for the loss corporations that are members of the controlled group. In general, the adjustment is made under paragraph (c) of this section by reducing the value of the loss corporation by the value of the stock of each component member of the controlled group that the loss corporation owns immediately after the ownership change. The loss corporation's value may, however, be increased under paragraph (c) of this section by any amount of value that the other member elects to restore to the loss corporation.

(b) *Controlled group loss and controlled group with respect to a controlled group loss.* A controlled group loss is a pre-change loss (or a net unrealized built-in loss) of a loss corporation that is attributable to a taxable year of the corporation with respect to which the corporation is a component member of a controlled group (as defined by paragraphs (e)(2) and (3) of this section). The controlled group with respect to each controlled group loss is composed of the loss corporation and each other corporation that is a component member of a controlled group that includes the loss corporation both—

(1) With respect to the taxable year to which the controlled group loss is attributable; and

(2) On the date the loss corporation has an ownership change.

(c) *Computation of value.* For purposes of computing the limitation under section 382 with respect to each controlled group loss, the value of the stock of each component member of the controlled group with respect to that loss is determined immediately before the ownership change, and is adjusted by applying the following rules:

(1) *Reduction in value.* The value of the stock of each component member is reduced by the value (immediately before the ownership change and without regard to any restoration of value or other adjustment under this section) of the stock of any other component member directly owned by the component member immediately after the ownership change.

(2) *Restoration of value.* After the value of the stock of each component member is reduced pursuant to paragraph (c)(1) of this section, the value of the stock of each component member is increased by the amount of value, if any, restored to the component member by another component member (the electing member) pursuant to this paragraph (c)(2). The electing member may elect to restore value to another component member in an amount that does not exceed the lesser of—

(i) The sum of—

(A) The value, determined immediately before the ownership change, of the electing member's stock (after adjustment under paragraph (c)(1) of this section and before any restoration of value under this paragraph (c)(2)); plus

(B) Any amount of value restored to the electing member by another component member under this paragraph (c)(2); or

(ii) The value, determined immediately before the ownership change, of the electing member's stock (without regard to any adjustment under this section) that is directly owned by the other component member immediately after the ownership change.

(3) *Reduction in value by the amount restored.* The value of the stock of the electing member is reduced by any amount of value that the electing member elects to restore under paragraph (c)(2) of this section to another component member.

(4) *Appropriate adjustments.* Appropriate additional adjustments consistent with paragraphs (c)(1), (2), and (3) of this section must be made to prevent any duplication of value. Thus, for example, adjustments must be made to reflect—

(i) Any indirect ownership interest in another component member;

(ii) Any cross ownership of stock by component members of the controlled group with respect to the controlled group loss; and

(iii) Any value used to determine a limitation under section 382 with respect to controlled group losses from the same period.

(5) *Certain reductions in the value of members of a controlled group.* A loss corporation that has an ownership change is required to make adjustments consistent with this paragraph (c) with respect to its stock if the stock of another corporation in which it had a direct or indirect ownership interest was disposed of before the ownership change, and;

(i) Both corporations were component members of a controlled group—

(A) With respect to a taxable year to which a controlled group loss of the loss corporation is attributable; and

(B) At any time during the 2 year period before the ownership change; and

(ii) Both corporations are component members of a controlled group at any time during the 2 year period following the ownership change.

(d) *No double reduction.* To the extent consistent with the purposes of this section, section 382 and this section shall not be applied to duplicate a reduction in the value of a loss corporation. Thus, for example, if the value of a loss corporation is reduced under section 382(l)(1) to reflect a capital contribution of stock of a component member, it is not again reduced by such amount under paragraph (c)(1) of this section. If this paragraph (d) applies to prevent a reduction in value from being duplicated, the application of the other rules of this section, such as those relating to the restoration of value, is correspondingly limited in a manner consistent with the principles of this section.

(e) *Definitions and nomenclature*—(1) *Definitions in section 382 and the regulations thereunder.* Except as otherwise provided, the definitions and nomenclature contained in section 382 and the regulations thereunder apply to this section.

(2) *Controlled group.* Controlled group has the same meaning as in section 1563(a), determined by substituting ''50 percent'' for ''80 percent'' each place that it appears, and without regard to section 1563(a)(4).

(3) *Component member.* Component member has the same meaning as in section 1563(b), determined by substituting ''December 31 (or the change date, if earlier)'' for ''December 31'' each place it appears, and without regard to section 1563 (b)(2), (b)(3)(C), and (b)(4).

(4) *Predecessor and successor corporation.* As the context may require, a reference to a corporation, or component member includes a reference to a predecessor or successor corporation.

(f) *Coordination between consolidated groups and controlled groups.* Some or all of the component members of a controlled group may also be members of a consolidated group, and a controlled group loss may be subject to a consolidated section 382 limitation or subgroup section 382 limitation determined under § 1.1502–93T. Except as otherwise provided in this paragraph (f)

and §§ 1.1502–91T through 1.1502–99T, § 1.1502–93T applies instead of this section when both sections, by their terms, are otherwise applicable. This section is applicable and may require an adjustment to value if a member of a consolidated group, a loss group, or a loss subgroup (as those terms are defined in §§ 1.1502–1(h) and 1.1502–91T) is also a component member of a controlled group with respect to a controlled group loss. Solely for purposes of applying this section, a consolidated group, loss group, or loss subgroup is treated as a single corporation. Thus to determine the limitation with respect to any portion of the pre-change consolidated attributes or pre-change subgroup attributes of the loss group or loss subgroup that is a controlled group loss, the consolidated section 382 limitation or subgroup section 382 limitation is computed by treating the loss group or the loss subgroup as a single corporation, and adjusting value in accordance with paragraph (c) of this section. See paragraph (g) *Example 4* of this section.

(g) *Examples.* For purposes of the examples in this section, unless otherwise stated, the nomenclature and assumptions of the examples in § 1.382–2T(b) apply, all corporations file separate income tax returns on a calendar year basis, the only 5-percent shareholder of a corporation is a public group, and the facts set forth the only owner shifts with respect to the corporations during the testing period.

Example 1. Controlled group with respect to a controlled group loss. (a) Public L owns all of the L stock, L and Public L1 own 30 percent and 70 percent, respectively, of the L1 stock, and L1 owns all of the corporation T stock. L1 has a net operating loss arising in Year 1 that is carried over to Year 4. L has a net operating loss arising in Year 2 that is carried over to Year 4. On August 1, Year 3, L acquires 30 percent of the stock of L1, thereby increasing its percentage ownership interest in L1 to 60 percent. On December 1, Year 3, L1 purchases all of the stock of corporation S from Public S. On November 1, Year 4, P acquires all of the L stock. The acquisition by P of all of the L stock on November 1, Year 4, causes ownership changes of both L and L1 under the rules of § 1.382–2T. The following is a graphic illustration of these facts.

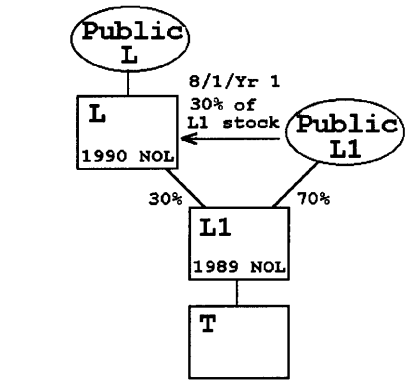

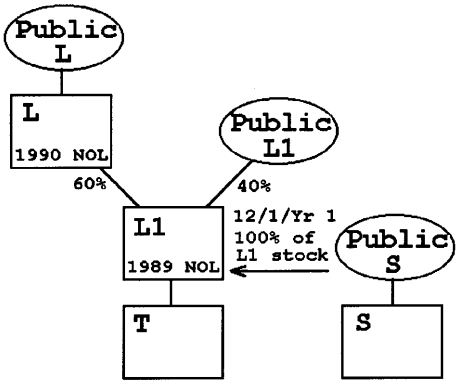

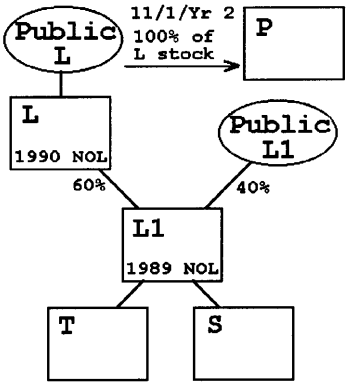

(b)(1) Under paragraph (b) of this section, the Year 1 net operating loss carryover of L1 is a controlled group loss because L1 is a component member of a controlled group with respect to Year 1, the year to which the

loss is attributable. L1 and T compose a controlled group with respect to the net operating loss carryover because L1 and T are component members of a controlled group both—

(A) With respect to the taxable year to which L1's net operating loss carryover is attributable (i.e., Year 1); and

(B) On November 1, Year 4, L1's change date. Although L and S are component members of L1's controlled group on L1's change date, they are not component members of the controlled group with respect to the Year 1 net operating loss carryover because they were not component members with respect to the year to which the net operating loss carryover is attributable.

(2) The value of L1's stock must therefore be adjusted in accordance with paragraph (c) of this section to take into account an adjustment with respect to the T stock (but not the S stock) in computing L1's limitation under section 382 with respect to its net operating loss carryover.

(c) Although L is a member of a controlled group composed of L, L1, S, and T on November 1, Year 4, L's change date, it is not a component member of a controlled group with respect to Year 2, the taxable year to which its net operating loss carryover is attributable. Therefore, L's Year 2 net operating loss carryover is not a controlled group loss under paragraph (b) of this section and the value of L's stock is not adjusted in accordance with paragraph (c) of this section to compute L's limitation under section 382 with respect to the Year 2 net operating loss carryover.

Example 2. Adjustments to value of the controlled group members. (a) Since Year 1, A has owned all of the stock of L, L and B have owned 80 percent and 20 percent, respectively, of the stock of corporation P, and P and C have owned 75 percent and 25 percent, respectively, of the stock of L1. L and L1 each has a net operating loss for the Year 6 taxable year that is carried over to its respective Year 7 taxable year. On December 1, Year 7, A sells all of the L stock to D. The sale results in ownership changes of both L and L1. Immediately before the ownership changes, the total value of the L1 stock is $40, the total value of the P stock (including the value of its L1 stock) is $100, and the total value of the L stock (including the value of the P stock) is $200. The following is a graphic illustration of these facts.

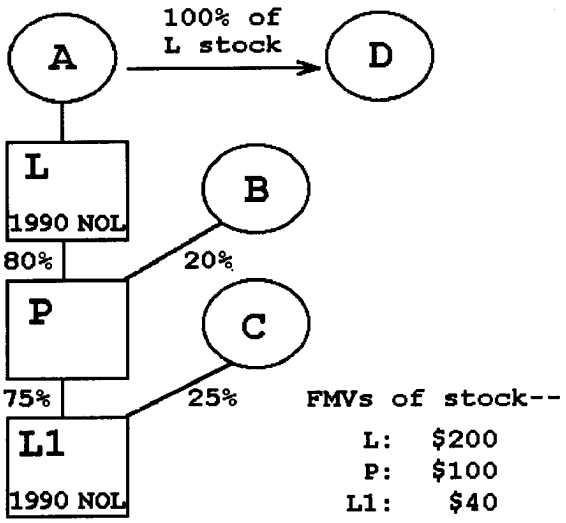

(b) Under paragraph (b) of this section, the Year 6 net operating loss carryovers of each of L and L1 are controlled group losses because each of L and L1 is a component member of a controlled group with respect to Year 6, the year to which the losses are attributable. L, P, and L1 compose controlled groups with respect to both Year 6 net operating loss carryovers because L, P, and L1 are component members of a controlled group both—

(1) With respect to the taxable years to which the net operating loss carryovers are attributable (i.e., Year 6); and

(2) On December 1, Year 7, the change date.

(c) The value of the stock of L1 for purposes of determining its limitation under section 382 with respect to its net operating

loss carryover from Year 6 is $40. L1 does not elect to restore any value to P under paragraph (c)(2) of this section.

(d) The value of the stock of P ($100) is reduced under paragraph (c)(1) of this section by the value of the stock of L1 that it directly owns, $30 (75%×$40). Following the adjustment, the value of the stock of P is $70. P elects to restore this entire $70 of value to L.

(e) The value of the stock of L, $200, is reduced under paragraph (c)(1) of this section by the value of the stock of P it directly owns, i.e., $80 (80%×$100), and increased under paragraph (c)(2) of this section by the amount P elects to restore to L, i.e., $70. Thus, the value of the L stock for purposes of determining L's limitation under section 382 with respect to its net operating loss carryover from Year 6 is $190 ($200 − $80+$70).

Example 3. Limitation on restoration of value. (a) The facts are the same as in *Example 2,* except that L1 elects to restore $20 to P. For purposes of determining L1's limitation under section 382 with respect to the Year 6 net operating loss carryover, the value of the stock of L1 is $20 ($40 − $20) because the value of its stock is reduced under paragraph (c)(3) of this section by the $20 of value it elects to restore to P.

(b) The value of the stock of P ($100) is reduced under paragraph (c)(1) of this section by the value of the L1 stock it directly owns ($30), and is increased under paragraph (c)(2) of this section by the value that L1 elects to restore to P ($20). Thus, the value of the P stock is $90 ($100 − $30+$20).

(c)(1) P elects to restore to L the maximum value permitted under this section. The value of the stock of L, $200, is reduced under paragraph (c)(1) of this section by the value of the P stock it directly owns ($80), and is increased by the value that P elects to restore to L. P may elect to restore to L the lesser of—

(A) The sum of the value of its stock immediately after adjustment under paragraph (c)(1) of this section (i.e., $70) plus the value restored to it by L1 (i.e., $20) (a total of $90); or

(B) The value of the P stock (without regard to the adjustment required by paragraphs (c)(1) and (2) of this section) that is directly owned by L immediately before the ownership change (i.e., $80).

(2) Thus, $80 is the maximum amount that P may elect to restore to L. Following the restoration of value by P, the value of the L stock for purposes of determining L's limitation under section 382 is $200 ($200 − $80 + $80).

Example 4. Coordination with consolidated return regulations. (a) P and its wholly owned subsidiary L file a consolidated return. L owns 79 percent of the outstanding stock of L1. P acquired the stock of L in Year 1 and L acquired the stock of L1 in Year 2. The P consolidated group has a consolidated net operating loss arising in the Year 6 consolidated return year that is carried over to Year 8. L1 has a net operating loss arising in its Year 6 taxable year that is also carried over to Year 8. On January 1, Year 8, the P consolidated group has an ownership change under § 1.1502–92T(b)(1)(i) and L1 has an ownership change under § 1.382–2T.

(b)(1) Under paragraph (b) of this section, the Year 6 net operating loss carryover of the P group is a controlled group loss because P, L, and L1 are component members of a controlled group with respect to Year 6, the year to which the loss is attributable. P, L, and L1 compose a controlled group with respect to the Year 6 net operating loss carryover of the P loss group because they are component members of a controlled group both—

(A) With respect to the taxable years to which the net operating loss carryover is attributable (i.e., Year 6); and –

(B) On January 1, Year 8, the P group's change date.

(2) Because P and L compose a loss group (within the meaning of § 1.1502–91T(c)) with respect to its Year 6 net operating loss carryover, the P loss group must compute a consolidated section 382 limitation with respect to its Year 6 net operating loss carryover as a result of the ownership change.

(c) In computing the consolidated section 382 limitation under § 1.1502–93T with respect to the Year 6 net operating loss carryover, the value of the P stock immediately before the ownership change is reduced under paragraphs (c)(1) and (f) of this section by the value immediately before the ownership change of the L1 stock directly owned by L immediately after the ownership change. L1 may, however, elect to restore such value to the P consolidated group to the extent permitted under paragraph (c)(2) of this section.

Example 5. Appropriate adjustments for indirect ownership interest. (a) Individual A owns all of the stock of L, L owns an 80 percent interest in the capital and profits of partnership PS, and PS owns 75 percent of the stock of L1. Both L and L1 have net operating losses for the Year 1 taxable year that are carried over to their respective Year 2 taxable years. On December 19, Year 2, A sells all of the L stock to an unrelated individual. The sale results in an ownership change of L and L1.

(b) Under paragraph (b) of this section, the Year 1 net operating loss carryovers of each of L and L1 are controlled group losses because each of L and L1 is a component member of a controlled group with respect to Year 1, the year to which the losses are attributable. L and L1 compose controlled groups with respect to each corporation's net operating loss carryovers because L and L1 are component members of a controlled group both—

(1) With respect to the taxable years to which the net operating loss carryovers are attributable (i.e., Year 1); and

(2) On December 19, Year 2, the change date.

(c) L has an indirect ownership interest in L1 which, under paragraph (c)(4) of this section, must be taken into account in applying this section. As a result, the value of the L stock for purposes of determining its limitation under section 382 with respect to the Year 1 net operating loss carryover must be reduced by the value of L's indirect ownership interest in the L1 stock (60 percent) that it owns through PS immediately before the ownership change, and is increased by the amount (if any) that L1 elects to restore to L under paragraph (c)(2) of this section. The value of L1 is reduced under paragraph (c)(3) of this section to the extent that L1 elects to restore value to L.

(h) *Time and manner of filing election to restore*—(1) *Statement required.* The election to restore value described in paragraph (c)(2) of this section must be in the form set forth below. It must be signed on behalf of both the electing member and the corporation to which such value is restored by persons authorized to sign their respective income tax returns. (The common parent of a consolidated group must make the election on behalf of the group.) It must be filed by the loss corporation with its income tax return for the taxable year in which the ownership change occurs (or with an amended return for such year filed on or before the due date (including extensions) of the income tax return of any component member with respect to the taxable year in which the ownership change occurs). The statement must provide that: ''THIS IS AN ELECTION UNDER § 1.382–8T OF THE INCOME TAX REGULATIONS TO RESTORE ALL OR PART OF THE VALUE OF [insert name and E.I.N. of the electing member] TO [insert name and E.I.N. of the corporation to which value is restored]. The statement must also—

(i) Identify the change date for the loss corporation in connection with which the election is made;

(ii) State the value of the electing member's stock (without regard to any adjustment under paragraph (c) of this section) immediately before the ownership change;

(iii) State the amount of any reduction required under paragraph (c)(1) of this section with respect to stock of the electing member that is owned directly or indirectly by the corporation to which value is restored;

(iv) State the amount of value that the electing member elects to restore to the corporation; and

(v) State whether the value of either component member's stock was adjusted pursuant to paragraph (c)(4) of this section.

(2) *Revocation of election.* An election made under this section is revocable only with the consent of the Commissioner.

(3) *Filing by component member.* An electing member must attach a copy of the statement described in paragraph (h)(1) of this section to its income tax return (or amended return) for the taxable year which includes the change date in connection with which the election is made.

(i) [Reserved]

(j) *Effective date*—(1) *In general.* This section applies to a loss corporation that has an ownership change with respect to a controlled group loss on or after January 1, 1997.

(2) *Transition rule*—(i) *In general.* The members of a controlled group on January 1, 1997, that have had an ownership change with respect to a controlled group loss before January 1, 1997, must determine the limitations under section 382 for any post-change year with respect to controlled group losses by using a reasonable method to preclude the value of stock of a component member that was owned directly or indirectly by another member immediately after an ownership change from being taken into account more than once in determining the limitations under section 382 with respect to controlled group losses. If such a reasonable method was not used for a post-change year, subject to the exception in paragraph (j)(3) of this section, the members of the controlled group described in the preceding sentence must reduce their limitations under section 382 for post-change years for which the income tax return is filed after January 1, 1997, to recapture, as quickly as possible, any limitation that members took into account in excess of the amount that would be allowable under this section.

(ii) *Special transition rule for controlled groups that had ownership changes before January 29, 1991.* For purposes of this section, in the case of an ownership change occurring before January 29, 1991, the controlled group with respect to a controlled group loss does not include a corporation that is not a component member of the controlled group on January 29, 1991. Thus, in the case of an ownership change occurring before January 29, 1991, paragraph (c) of this section does not require that a loss corporation that is a component member of a controlled group to disregard the value of stock of another corporation directly owned immediately after the ownership change in determining the value of its own stock unless the other corporation is a component member of the controlled group on January 29, 1991.

(3) *Amended returns.* A taxpayer that has had an ownership change before January 1, 1997, may file an amended return for any taxable year to modify the amount of a limitation under section 382 with respect to a controlled group loss only if—

(i) The modification complies with the rules contained in this section for computing a limitation under section 382;

(ii) Any other component member of the controlled group with respect to the controlled group loss who elects to restore value and whose taxable income is affected by the election to restore value also files amended returns that comply with such rules; and

(iii) Corresponding adjustments are made in amended returns for all taxable years ending after December 31, 1986.

[T.D. 8679, 61 FR 33316, June 27, 1996]

§ 1.382–9 Special rules under section 382 for corporations under the jurisdiction of a court in a title 11 or similar case.

(a) *Introduction.* Either section 382(l)(5) or section 382(l)(6) may apply to an ownership change which occurs in a title 11 or similar case (as defined in section 368(a)(3)(A)) if the transaction resulting in the ownership change is ordered by the court or is pursuant to a plan approved by the court. Terms and nomenclature used in this section, and not otherwise defined herein (including the nomenclature and assumptions in § 1.382–2T(b) relating to the examples) have the same respective meanings as in section 382 and the regulations thereunder.

(b) *Application of section 382(l)(5).* section 382(a) does not apply to any ownership change if—

(1) The old loss corporation is (immediately before the ownership change) under the jurisdiction of the court in a title 11 or similar case; and

(2) The pre-change shareholders and qualified creditors of the old loss corporation (determined immediately before the ownership change) own (after the ownership change and as a result of being pre-change shareholders or qualified creditors immediately before the ownership change) stock of the new loss corporation (or stock of a controlling corporation if also in bankruptcy) that meets the requirements of section 1504(a)(2) (determined by substituting ''50 percent'' for ''80 percent'' each place it appears).

(c) [Reserved]

(d) *Rules for determining whether stock of the loss corporation is owned as a result of being a qualified creditor*—(1) *Qualified creditor.* A qualified creditor is the beneficial owner, immediately before the ownership change, of qualified indebtedness of the loss corporation. A qualified creditor owns stock of the new loss corporation (or a controlling corporation) as a result of being a qualified creditor only to the extent that the qualified creditor receives stock in full or partial satisfaction of qualified indebtedness (including interest accrued on such indebtedness) in a transaction that is ordered by the court or is pursuant to a plan approved by the court in a title 11 or similar case. For purposes of this paragraph (d)(1), ownership of stock after the ownership change is determined without applying the attribution rules generally applicable under section 382(l)(3)(A) or § 1.382–2T(h).

(2) *General rules for determining whether indebtedness is qualified indebtedness*—(i) *Definition.* Indebtedness of the loss corporation is qualified indebtedness if it—

(A) Has been owned by the same beneficial owner since the date that is 18

months before the date of the filing of the title 11 or similar case; or

(B) Arose in the ordinary course of the trade or business of the loss corporation and has been owned at all times by the same beneficial owner.

(ii) *Determination of beneficial ownership.* For purposes of paragraph (d)(2)(i) of this section, beneficial ownership of indebtedness is determined without applying attribution rules.

(iii) *Duty of inquiry.* The loss corporation must determine that indebtedness that the loss corporation treats as qualified indebtedness, other than indebtedness to which paragraph (d)(3)(i) of this section applies, has been owned for the requisite period by the beneficial owner who owns the indebtedness immediately before the ownership change. The loss corporation may rely on a statement, signed under penalties of perjury, by a beneficial owner regarding the amount of indebtedness the beneficial owner owns and the length of time that the beneficial owner has owned the indebtedness.

(iv) *Ordinary course indebtedness.* For purposes of this paragraph (d)(2), indebtedness arises in the ordinary course of the loss corporation's trade or business only if the indebtedness is incurred by the loss corporation in connection with the normal, usual, or customary conduct of business, determined without regard to whether the indebtedness funds ordinary or capital expenditures of the loss corporation. For example, indebtedness (other than indebtedness acquired for a principal purpose of being exchanged for stock) arises in the ordinary course of the loss corporation's trade or business if it is trade debt; a tax liability; a liability arising from a past or present employment relationship, a past or present business relationship with a supplier, customer, or competitor of the loss corporation, a tort, a breach of warranty, or a breach of statutory duty; or indebtedness incurred to pay an expense deductible under section 162 or included in the cost of goods sold. A claim that arises upon the rejection of a burdensome contract or lease pursuant to the title 11 or similar case is treated as arising in the ordinary course of the loss corporation's trade or business if the contract or lease so arose.

(3) *Treatment of certain indebtedness as continuously owned by the same owner*—(i) *In general.* For purposes of paragraph (d)(2) of this section, a loss corporation may treat indebtedness as always having been owned by the beneficial owner of the indebtedness immediately before the ownership change if the beneficial owner is not, immediately after the ownership change, either a 5-percent shareholder or an entity through which a 5-percent shareholder owns an indirect ownership interest in the loss corporation (a *5-percent entity*). This paragraph (d)(3)(i) does not apply to indebtedness beneficially owned by a person whose participation in formulating a plan of reorganization makes evident to the loss corporation (whether or not the loss corporation had previous knowledge) that the person has not owned the indebtedness for the requisite period.

(ii) *Operating rules.* For purposes of paragraph (d)(3)(i) of this section: (A) If a loss corporation has actual knowledge of a coordinated acquisition of its indebtedness by a group of persons, through a formal or informal understanding among themselves, for a principal purpose of exchanging the indebtedness for stock, the indebtedness (and any stock received in exchange therefor) is treated as owned by an entity. A principal element in determining if an understanding exists among members of a group is whether the investment decision of each member is based upon the investment decision of one or more other members.

(B) If the loss corporation has actual knowledge regarding stock ownership described in §1.382–2T(k)(2), the loss corporation must take that ownership into account in determining which beneficial owners of indebtedness are, immediately after the ownership change, 5-percent shareholders or 5-percent entities. The loss corporation is not required to take into account an ownership interest described in §1.382–2T(k)(4) unless the loss corporation has actual knowledge of the ownership interest.

(C) The term *5-percent shareholder* includes any person who is a 5-percent shareholder of the loss corporation

within the meaning of § 1.382–2T(g), without regard to the option attribution rules of section 382(l)(3)(A) or § 1.382–4(d) (or, if applicable, § 1.382–2T(h)(4)).

(D) Paragraph (d)(3)(i) of this section does not apply to indebtedness if the loss corporation has actual knowledge immediately after the ownership change that the exercise of an option to acquire or dispose of stock of the loss corporation would cause the beneficial owner of the indebtedness immediately before the ownership change to be, after the ownership change, either a 5-percent shareholder or a 5-percent entity. An interest that is treated as an option under § 1.382–4(d)(9) (or § 1.382–2T(h)(4)(v) if applicable) is treated as an option for purposes of this paragraph (d)(3)(ii)(D).

(iii) *Indebtedness owned by beneficial owner who becomes a 5-percent shareholder or 5-percent entity.* If the beneficial owner of indebtedness immediately before the ownership change is a 5-percent shareholder or 5-percent entity immediately after the ownership change, the general rules of paragraph (d)(2) of this section apply to determine whether the indebtedness has been owned for the requisite period by the beneficial owner.

(iv) *Example.* The following example illustrates paragraph (d)(3) of this section.

(A)(1) L is a loss corporation in a title 11 case. The plan of reorganization of L approved by the bankruptcy court provides for the satisfaction of claims by the issuance of new L common stock to its creditors as follows:

A—2 percent
B—7.5 percent
C—2.5 percent
P1—3 percent
P2—10 percent
P3—4.9 percent
P4—4.9 percent
P5—4.9 percent

(2) P2 is owned by Public P2. B owns 10 percent of the stock of P1 and L has no actual knowledge of this ownership. L has actual knowledge that D owns P3, P4 and P5. In addition, L has actual knowledge, immediately after the ownership change, that C owns an option to acquire newly-issued stock of L that, if exercised, would increase C's percentage ownership of L stock from 2.5 percent to 8 percent. An ownership change of L occurs on the date the plan becomes effective.

(B) Under paragraph (d)(3)(i) of this section, L may treat the indebtedness owned by A and P1 immediately before the ownership change as always having been owned by A and P1. Neither A nor P1 is a 5-percent shareholder immediately after the ownership change. Further, because P1 owns less than 5 percent of the L stock (and L has no actual knowledge of B's ownership interest in P1), P1 is treated as an individual, and the L stock owned by P1 is not attributed to any other person, including B. See § 1.382–2T(h)(2)(iii). Therefore, P1 is not a 5-percent entity.

(C) Paragraph (d)(3)(i) of this section does not apply to the indebtedness owned by B, C, P2, P3, P4, or P5. B is a 5-percent shareholder immediately after the ownership change. L has actual knowledge immediately after the ownership change that the exercise of C's option would cause C to be a 5-percent shareholder immediately after the ownership change. (L does not take into account the effect of the exercise of the option, however, in determining the percentage stock ownership of any person other than C because the deemed exercise would not cause any other person to be a 5-percent shareholder or a 5-percent entity after the ownership change.) P2 is a 5-percent entity, because Public P2, a 5-percent shareholder, owns an indirect ownership interest in L through P2. P3, P4, and P5 are 5-percent entities because D, a 5-percent shareholder, owns an indirect ownership interest in L through P3, P4, and P5. Because L has actual knowledge that D would be a 5-percent shareholder but for the application of § 1.382–2T(h)(2)(iii), that section does not apply to P3, P4, or P5. See § 1.382–2T(k)(2). Thus, under § 1.382–2T(h)(2)(i), the L stock owned by P3, P4, and P5 is attributed to D, and D is a 5-percent shareholder. Because paragraph (d)(3)(i) of this section does not apply to the indebtedness owned by B, C, P2, P3, P4, and P5, L may treat as qualified indebtedness only indebtedness that it determines had been owned by such persons for the requisite period. See paragraph (d)(2)(iii) of this section.

(4) *Special rule if indebtedness is a large portion of creditor's assets*—(i) *In general.* Indebtedness is not qualified indebtedness if—

(A) The beneficial owner of the indebtedness is a corporation or other entity that had an ownership change on any day during the applicable period;

(B) The indebtedness represents more than 25 percent of the fair market value of the total gross assets (excluding cash or cash equivalents) of the

beneficial owner on its change date; and

(C) The beneficial owner is a 5-percent entity immediately after the ownership change of the loss corporation (determined by applying the rules of paragraph (d)(3) of this section).

(ii) *Applicable period.* For purposes of paragraph (d)(4)(i) of this section, the term *applicable period* means the period beginning on the day 18 months before the filing of the title 11 or similar case (or the day on which the beneficial owner acquired the indebtedness, if later) and ending with the change date of the loss corporation.

(iii) *Determination of ownership change.* For purposes of paragraph (d)(4)(i) of this section, the determination whether a beneficial owner of indebtedness has an ownership change is made under the principles of section 382 and the regulations thereunder, without regard to whether the beneficial owner is a loss corporation and by beginning the testing period no earlier than the latest of the day three years before the change date, the day 18 months before the filing of the title 11 or similar case, or the day on which the beneficial owner acquired the indebtedness.

(iv) *Reliance on statement.* Paragraph (d)(4)(i) of this section does not apply to indebtedness if the loss corporation obtains a statement, signed under penalties of perjury, by the beneficial owner of the indebtedness that states that paragraph (d)(4)(i) of this section does not apply to the indebtedness.

(5) *Tacking of ownership periods*—(i) *Transferee treated as owning indebtedness for period owned by transferor.* To determine whether indebtedness transferred in a qualified transfer is qualified indebtedness, the transferee is treated as having owned the indebtedness for the period that it was owned by the transferor.

(ii) *Qualified transfer.* For purposes of paragraph (d)(5)(i) of this section, a transfer of indebtedness is a qualified transfer if—

(A) The transfer is between parties who bear a relationship to each other described in section 267(b) or 707(b) (substituting at least 80 percent for more than 50 percent each place it appears in section 267(b) (and section 267(f)(1)) or 707(b));

(B) The transfer is a transfer of a loan within 90 days after its origination, pursuant to a customary syndication transaction;

(C) The transfer is a transfer of newly incurred indebtedness by an underwriter that owned the indebtedness for a transitory period pursuant to an underwriting;

(D) The transferee's basis in the indebtedness is determined under section 1014 or 1015 or with reference to the transferor's basis in the indebtedness;

(E) The transfer is in satisfaction of a right to receive a pecuniary bequest;

(F) The transfer is pursuant to any divorce or separation instrument (within the meaning of section 71(b)(2));

(G) The transfer is pursuant to a subrogation in which the transferee acquires a claim against the loss corporation by reason of a payment to the claimant pursuant to an insurance policy or a guarantee, letter of credit or similar security arrangement; or

(H) The transfer is a transfer of an account receivable in a customary commercial factoring transaction made within 30 days after the account arose to a transferee that regularly engages in such transactions.

(iii) *Exception.* A transfer of indebtedness is not a qualified transfer for purposes of paragraph (d)(5)(i) of this section if the transferee acquired the indebtedness for a principal purpose of benefiting from the losses of the loss corporation by—

(A) Exchanging the indebtedness for stock of the loss corporation pursuant to the title 11 or similar case; or

(B) Selling the indebtedness at a profit that reflects the expectation that, by reason of section 382(l)(5), section 382(a) will not apply to any ownership change resulting from the title 11 or similar case.

(iv) *Debt-for-debt exchanges.* If the loss corporation satisfies its indebtedness with new indebtedness, either through an exchange of new indebtedness for old indebtedness or a change in the terms of indebtedness that results in an exchange under section 1001—

(A) The owner of the new indebtedness is treated as having owned that

indebtedness for the period that it owned the old indebtedness; and

(B) The new indebtedness is treated as having arisen in the ordinary course of the trade or business of the loss corporation if the old indebtedness so arose.

(6) *Effective date*—(i) *In general.* This paragraph (d) applies to ownership changes occurring on or after March 17, 1994.

(ii) *Elections and amended returns*—(A) *Election to apply this paragraph (d) retroactively.* A loss corporation may elect to apply this paragraph (d) to an ownership change occurring prior to March 17, 1994. This election must be made by the later of the due date (including any extensions of time) of the loss corporation's tax return for the taxable year which includes the change date or the date that the loss corporation files its first tax return after May 16, 1994. The election is made by attaching the following statement to the return: ''This is an Election to Apply § 1.382–9(d) Retroactively with Respect to the Ownership Change on [Insert Date of Ownership Change] That Occurred in Connection with the Title 11 or Similar Case filed on [Insert Date of Filing].'' This statement must be accompanied by the amended returns described in paragraph (d)(6)(ii)(C) of this section. An election under this paragraph (d)(6) is irrevocable.

(B) *Election to revoke section 382(l)(5)(H) election.* A loss corporation may elect to revoke a prior election made under section 382(l)(5)(H) with respect to an ownership change occurring before March 17, 1994 by including the following statement with its election to apply § 1.382–9(d) retroactively: ''This is an Election to Revoke a Prior Election Made Under Section 382(l)(5)(H) With Respect to the Ownership Change on [Insert Date of Ownership Change] That Occurred in Connection With the Title 11 or Similar Case Filed on [Insert Date of Filing].''

(C) *Amended returns.* If the retroactive application of this paragraph (d) affects the amount of taxable income or loss for a prior taxable year, then, except as precluded by the applicable statute of limitations, the loss corporation (or the common parent of any consolidated group of which the loss corporation was a member for the year) must file an amended return for the year that reflects the effects of the retroactive application of the rules of this paragraph (d). If the statute of limitations precludes the filing of an amended return for one or more such prior taxable years, the loss corporation (or the common parent) must make appropriate adjustments under the principles of section 382(l)(2)(A) in subsequent taxable years to reflect the difference between the losses and credits actually used in such prior taxable years and the amount that would have been used in those years applying the rules of this paragraph (d).

(e) *Option attribution for purposes of determining stock ownership under section 382(l)(5)(A)(ii)*—(1) *In general.* Solely for purposes of determining whether the stock ownership requirements of section 382(l)(5)(A)(ii) are satisfied at the time of an ownership change, stock of the loss corporation (or of a controlling corporation if also in bankruptcy) that is subject to an option is treated as acquired at that time, pursuant to an exercise of the option by its owner, if such deemed exercise would cause the pre-change shareholders and qualified creditors of the loss corporation to own (after such ownership change and as a result of being pre-change shareholders or qualified creditors immediately before such change) less than an amount of such stock sufficient to satisfy the ownership requirements of section 382(l)(5)(A)(ii). An option that is owned as a result of being a pre-change shareholder or qualified creditor and that, if exercised, would result in the ownership of stock by a pre-change shareholder or qualified creditor is not treated as exercised under this paragraph (e). For purposes of this paragraph (e)(1), rules similar to those option attribution rules under § 1.382–2T(h)(4)(iii), (iv), (v), (vii), and (x)(A), (B) (except with respect to a debt instrument that was issued after the filing of the petition in the title 11 or similar case), (D), (E) (except with respect to a right to receive or obligation to issue stock as interest or dividends on a debt instrument or stock that was issued after the filing of the petition in the title 11 or similar case), (G), (H), and (Z), apply.

(2) *Special rules*—(i) *Lapse or forfeiture of options deemed exercised.* A loss corporation may apply rules similar to the rules of § 1.382–2T(h)(4)(viii) with respect to an option except to the extent any person owning the option at any time on or after the change date acquires additional stock or an option to acquire additional stock during the period of time on or after the ownership change and on or before the lapse or forfeiture of the option.

(ii) *Actual exercise of options not deemed exercised.* In determining whether the ownership change pursuant to the plan of reorganization qualifies under section 382(l)(5), a loss corporation may take into account stock acquired pursuant to the actual exercise of an option issued pursuant to the plan of reorganization if that option was not deemed exercised under paragraph (e)(1) of this section. However, this paragraph (e)(2)(ii) applies only if the option is actually exercised within the 3 years of the ownership change by the 5-percent shareholder who, as a result of being a pre-change shareholder or qualified creditor, acquired the option under the plan.

(iii) *Amended returns.* A loss corporation may file an amended return for a prior taxable year (subject to any applicable statute of limitations) if it determines that section 382(l)(5) applies to an ownership change as a result of the operation of paragraph (e)(2)(i) or (ii) of this section, but only if the loss corporation makes corresponding adjustments on amended returns for all affected taxable years (subject to any applicable statute of limitations).

(3) *Examples.* In each of the examples in this paragraph (e)(3), assume that there is an ownership change of loss corporation L on the date the plan of reorganization is effective.

Example 1. L is a loss corporation in a title 11 case. The plan of reorganization of L approved by the bankruptcy court provides for the cancellation of all existing L stock, the issuance of 100 shares of new L common stock to qualified creditors, and the issuance of an option to a new investor to acquire, at any time during the next 3 years, 90 shares of new L common stock from L at its fair market value on the date the plan becomes effective. Under paragraph (e)(1) of this section, on the date the plan becomes effective, the option held by the new investor is deemed exercised if the exercise would cause the qualified creditors of L to own less than 50 percent of the total voting power or value of the L stock after the ownership change. Because the qualified creditors would receive at least 50 percent of the voting power and value of the new L common stock even if the option were deemed exercised, the stock ownership requirements of section 382(l)(5)(A)(ii) are satisfied.

Example 2. The facts are the same as in *Example 1*, except that L issues an option to the new investor to acquire 110 shares of new L common stock. This option is deemed exercised under paragraph (e)(1) of this section on the date the plan becomes effective, because, as a result of the deemed exercise, the qualified creditors would own only 100 of 210 shares of the new L common stock (approximately 48 percent) after the ownership change. Accordingly, the stock ownership requirements of section 382(l)(5)(A)(ii) are not satisfied and section 382(a) applies to the ownership change.

Example 3. (a) L is a loss corporation in a title 11 case. The plan of reorganization of L approved by the bankruptcy court provides for the cancellation of all existing L stock, the issuance of new L common stock and 5-year options to acquire L common stock as follows:

(i) To qualified creditors—100 shares of stock and options to acquire 50 shares;

(ii) To a new investor—options to acquire 110 shares.

(b) Under paragraph (e)(1) of this section, the option held by the new investor is deemed exercised on the date the plan becomes effective because the exercise would cause the qualified creditors of L to own less than 50 percent of the total voting power and value of the L stock after the ownership change (100 of 210 shares or approximately 48 percent). Accordingly, the stock ownership requirements of section 382(l)(5)(A)(ii) are not satisfied initially and section 382(a) applies to the ownership change.

(c) Assume, however, that the qualified creditors actually exercise enough options that were acquired pursuant to the plan of reorganization to purchase 30 additional shares during the 3 year period after the plan becomes effective. Under paragraph (e)(2)(ii) of this section, L may take into account the 30 shares purchased by the qualified creditors by the exercise of the options in determining whether the stock ownership requirements of section 382(l)(5)(A)(ii) were satisfied on the date the plan of reorganization became effective. If L takes such purchases into account, the qualified creditors of L are deemed to own as of the date of the ownership change more than 50 percent of the total voting power or value of the L stock after the ownership change (130 of 240 shares or approximately 54 percent), with the result that the stock ownership requirements of section

382(l)(5)(A)(ii) are satisfied and section 382(l)(5) applies to the ownership change as of the effective date of the plan.

(d) Assume instead that the qualified creditors acquire 30 additional shares by exercise of options more than 3 years after the plan becomes effective. Such exercise is not taken into account under paragraph (e)(2)(ii) of this section for purposes of determining whether the stock ownership requirements of section 382(l)(5)(A)(ii) are satisfied as of the effective date of the plan. Thus, the qualified creditors are deemed to own less than 50 percent of the total voting power and value of the L stock after the ownership change (100 of 210 shares) and section 382(l)(5) does not apply to the ownership change.

(e) Assume instead that, during the 3 year period after the plan becomes effective, the new investor exercises part of his option and purchases 105 shares of stock. The exercise causes a lapse of the rights to acquire the remaining 5 shares of stock. Also during that time, the qualified creditors exercise part of their options and acquire 6 additional shares of stock. Under paragraph (e)(2)(i) of this section, L may treat the lapse of that part of the new investor's option to acquire 5 shares of stock as if that part of the option had never been issued for purposes of determining whether the stock ownership requirements of section 382(l)(5)(A)(ii) are satisfied as of the effective date of the plan. Also, under paragraph (e)(2)(ii) of this section, L may take into account the 6 shares purchased by the qualified creditors by the exercise of the options in determining whether the stock ownership requirements of section 382(l)(5)(A)(ii) are satisfied as of the effective date of the plan. If L takes all of this information into account, the qualified creditors are deemed to own more than 50 percent of the total voting power or value of the L stock after the ownership change (106 of 211 shares or approximately 50.2 percent) and section 382(l)(5) applies to the ownership change as of the effective date of the plan.

(4) *Effective dates*—(i) *In general.* This paragraph (e) applies to ownership changes occurring on or after September 5, 1990.

(ii) *Special rule for interest or dividends.* Rules similar to the rules of § 1.382–2T(h)(4)(x)(E) (relating to option attribution for purposes of determining whether an ownership change occurs) apply to a right to receive or obligation to issue stock as interest or dividends on a debt instrument or stock that was issued after the filing of the petition in the title 11 or similar case for ownership changes occurring before April 8, 1992.

(f)—(h) [Reserved]

(i) *Election not to apply section 382(l)(5).* Under section 382(l)(5)(H), a loss corporation may elect not to have the provisions of section 382(l)(5) apply to an ownership change in a title 11 or similar case. This election is irrevocable and must be made by the due date (including any extensions of time) of the loss corporation's tax return for the taxable year which includes the change date. The election is to be made by attaching the following statement to the tax return of the loss corporation for that taxable year: ''This is an Election Under § 1.382–9(i) not to Apply the Provisions of Section 382(l)(5) to the Ownership Change Occurring Pursuant to a Plan of Reorganization Confirmed by the Court on [Insert Confirmation Date].''

(j) *Value of the loss corporation in an ownership change to which section 382(l)(6) applies.* Section 382(l)(6) applies to any ownership change occurring pursuant to a plan of reorganization in a title 11 or similar case to which section 382(l)(5) does not apply. In such case, the value of the loss corporation under section 382(e) is equal to the lesser of—

(1) The value of the stock of the loss corporation immediately after the ownership change (determined under the rules of paragraph (k) of this section); or

(2) The value of the loss corporation's pre-change assets (determined under the rules of paragraph (l) of this section).

(k) *Rules for determining the value of the stock of the loss corporation*—(1) *Certain ownership interests treated as stock.* For purposes of paragraph (j)(1) of this section—

(i) Stock includes stock described in section 1504(a)(4) and any stock that is not treated as stock under § 1.382–2T(f)(18)(ii) for purposes of determining whether a loss corporation has an ownership change; and

(ii) Stock does not include an ownership interest that is treated as stock under § 1.382–2T(f)(18)(iii) for purposes of determining whether a loss corporation has an ownership change.

(2) *Coordination with section 382(e)(2).* In the case of a redemption or other corporate contraction occurring after and in connection with the ownership

change, the value of the stock of the loss corporation under paragraph (j)(1) of this section is reduced under section 382(e)(2).

(3) *Coordination with section 382(e)(3).* If the loss corporation is a foreign corporation, in determining the value of the stock under paragraph (j)(1) of this section, only items treated as connected with the conduct of a trade or business in the United States are taken into account.

(4) *Coordination with section 382(l)(1).* Section 382(l)(1) does not apply in determining the value of the stock of the loss corporation under paragraph (j)(1) of this section.

(5) *Coordination with section 382(l)(4).* If, immediately after the ownership change, the loss corporation has substantial nonbusiness assets (as determined under section 382(l)(4)(B) taking into account only those assets the loss corporation held immediately before the ownership change), the value of the stock of the loss corporation under paragraph (j)(1) of this section is reduced by the excess of the value of such nonbusiness assets over those assets' share of the loss corporation's indebtedness (determined under section 382(l)(4)(D) taking into account the loss corporation's assets and liabilities immediately after the ownership change).

(6) *Special rule for stock not subject to the risk of corporate business operations*—(i) *In general.* The value of the stock of the loss corporation under paragraph (j)(1) of this section is reduced by the value of stock that is issued as part of a plan one of the principal purposes of which is to increase the section 382 limitation without subjecting the investment to the entrepreneurial risks of corporate business operations.

(ii) *Coordination of special rule and other rules affecting value.* If the value of the loss corporation is modified under another rule affecting value, appropriate adjustments are to be made so that such modification is not duplicated under this paragraph (k)(6).

(7) *Limitation on value of stock.* For purposes of paragraph (j)(1) of this section, the value of stock of the loss corporation issued in connection with the ownership change cannot exceed the cash and the value of any property (including indebtedness of the loss corporation) received by the loss corporation in consideration for the issuance of that stock.

(l) *Rules for determining the value of the loss corporation's pre-change assets*—(1) *In general.* Except as otherwise provided in this paragraph (l), the value of the loss corporation's pre-change assets is the value of its assets (determined without regard to liabilities) immediately before the ownership change.

(2) *Coordination with section 382(e)(2).* Section 382(e)(2) does not apply in determining the value of the pre-change assets of the loss corporation under paragraph (j)(2) of this section.

(3) *Coordination with section 382(e)(3).* If the loss corporation is a foreign corporation, in determining the value of the pre-change assets under paragraph (j)(2) of this section, only assets treated as connected with the conduct of a trade or business in the United States are taken into account.

(4) *Coordination with section 382(l)(1).* For purposes of paragraph (j)(2) of this section, the value of the pre-change assets of the loss corporation is determined without regard to the amount of any capital contribution to which section 382(l)(1) applies. For purposes of applying this paragraph (l)(4), the receipt of cash or property by the loss corporation in exchange for the issuance of indebtedness is considered a capital contribution if it is part of a plan one of the principal purposes of which is to increase the value of the loss corporation under paragraph (j) of this section.

(5) *Coordination with section 382(l)(4).* If, immediately after the ownership change, the loss corporation has substantial nonbusiness assets (as determined under section 382(l)(4)(B) taking into account only those assets the loss corporation held immediately before the ownership change), the value of the loss corporation's pre-change assets is reduced by the value of the nonbusiness assets.

(m) *Continuity of business requirement*—(1) *Under section 382(l)(5).* If section 382(l)(5) applies to an ownership change of a loss corporation, section 382(c) and the regulations thereunder do not apply with respect to the ownership change.

(2) *Under section 382(l)(6).* If section 382(l)(6) applies to an ownership change of a loss corporation, section 382(c) and the regulations thereunder apply to the ownership change.

(n) *Ownership change in a title 11 or similar case succeeded by another ownership change within two years*—(1) *Section 382(l)(5) applies to the first ownership change.* If section 382(l)(5) applies to an ownership change and, within the two-year period immediately following such ownership change, a second ownership change occurs, section 382(l)(5) cannot apply to the second ownership change and the section 382(a) limitation with respect to the second ownership change is zero.

(2) *Section 382(l)(6) applies to the first ownership change.* If the value of a loss corporation in an ownership change was determined under section 382(l)(6) and a second ownership change occurs within the two-year period immediately following the first ownership change, the value of the loss corporation under section 382(e) with respect to the second ownership change is not reduced under section 382(l)(1) for any increase in value of the loss corporation previously taken into account under section 382(l)(6) with respect to the first ownership change.

(o) *Treatment of certain options for ownership change purposes*—(1) Neither § 1.382–2T(h)(4)(i) nor § 1.382–4(d) (relating to the treatment of options as exercised) applies to the following options to acquire stock of a loss corporation reorganized pursuant to a plan of reorganization that is confirmed in a title 11 or similar case (within the meaning of section 368(a)(3)(A)) but only until the time the plan becomes effective—

(i) Any option created by the solicitation or receipt of acceptances to the plan;

(ii) The option created by the confirmation of the plan; and

(iii) Any option created under the plan.

(2) This paragraph (o) generally applies to any testing date occurring on or after September 5, 1990. However, this paragraph (o) does not apply on any testing date occurring on or after April 8, 1992, if, in connection with the plan of reorganization, the loss corporation issues stock (including stock described in section 1504(a)(4)) or otherwise receives a capital contribution before the effective date of the plan for a principal purpose of using before the effective date losses and credits that would be subject to limitation under section 382(a) or would be eliminated under section 382(l)(5)(B) or (C) if this paragraph (o) did not apply on the testing date. A loss corporation may elect to apply this paragraph (o) to any testing date occurring before September 5, 1990, by filing a statement substantially similar to the following with its income tax return: ''THIS IS AN ELECTION TO APPLY § 1.382–3(o) (OR § 1.382–9(o) AFTER REDESIGNATION) FOR TESTING DATES PRIOR TO SEPTEMBER 5, 1990, TO OPTIONS CREATED BY OR UNDER A PLAN OF REORGANIZATION CONFIRMED IN A TITLE 11 OR SIMILAR CASE.'' A loss corporation may elect to not apply this paragraph (o) to testing dates occurring on or after September 5, 1990, to April 8, 1992, by filing a statement substantially similar to the following with its income tax return: ''THIS IS AN ELECTION TO NOT APPLY § 1.382–3(o) (OR § 1.382–9(o) AFTER REDESIGNATION) FOR TESTING DATES OCCURRING ON OR AFTER SEPTEMBER 5, 1990, TO APRIL 8, 1992, TO OPTIONS CREATED BY OR UNDER A PLAN OF REORGANIZATION CONFIRMED IN A TITLE 11 OR SIMILAR CASE.''

(p) *Effective date for rules relating to section 382(l)(6)*—(1) *In general.* Paragraphs (i), (j), (k), (l), (m)(2), and (n)(2) of this section apply to any ownership change occurring on or after March 17, 1994.

(2) *Ownership change to which section 382(l)(6) applies occurring before March 17, 1994.* In the case of an ownership change occurring before March 17, 1994, the loss corporation may elect to apply the rules of paragraphs (j), (k), (l), (m)(2), and (n)(2) of § 1.382–9 in their entirety. The election must be made by the later of the due date (including any extensions of time) of the loss corporation's tax return for the taxable year which includes the change date or the date that the loss corporation files its first tax return after May 16, 1994. The election is made by attaching the following statement to the return: ''This is an Election to Apply §§ 1.382–9 (j), (k),

(l), (m)(2), and (n)(2) of the Income Tax Regulations to the Ownership Change Occurring Pursuant to a Plan of Reorganization Confirmed by the Court on [Insert Confirmation Date].'' In connection with making this election, on the same return the loss corporation may also elect not to apply section 382(l)(5) to the ownership change under paragraph (i) of this section (if the loss corporation has not already done so pursuant to §301.9100–7T(a) of this chapter). If, under the applicable statute of limitations, the loss corporation may file amended returns for the year of the ownership change and all subsequent years (an open year), an electing loss corporation must file an amended return for each prior affected year to reflect the elections. If, under the applicable statute of limitations, the loss corporation may not file an amended return for the year of the ownership change or any subsequent year (a closed year), an electing loss corporation must file an amended return for each affected open year to reflect the elections and the section 382 limitation resulting from the ownership change must be appropriately adjusted for the earliest open year (or years) to reflect the difference between the amount of pre-change losses actually used in closed years and the amount of pre-change losses that would have been used in such years applying the rules of paragraphs (j), (k), (l), (m)(2), (n)(2) of this section to the ownership change.

[T.D. 8388, 57 FR 346, Jan. 6, 1992; T.D. 8407, 57 FR 12210, Apr. 9, 1992. Redesignated by T.D. 8440, 57 FR 45712, 45713, Oct. 5, 1992; 57 FR 52827, Nov. 5, 1992; T.D. 8531, 59 FR 12840, Mar. 18, 1994; T.D. 8530, 59 FR 12843, Mar. 18, 1994; T.D. 8529, 59 FR 12846, Mar. 18, 1994]

§ 1.382–10 [Reserved]

§ 1.382–11 Effective dates. [Reserved]

§ 1.383–0 Effective date.

(a) The regulations under section 383 (other than the regulations described in paragraph (b) of this section) reflect the amendments made to sections 382 and 383 by the Tax Reform Act of 1986. See §1.383–1(j) for effective date rules.

(b) Sections 1.383–1A, 1.383–2A, and 1.383–3A do not reflect the amendments made to sections 382 and 383 by the Tax Reform Act of 1986.

[T.D. 8352, 56 FR 29434, June 27, 1991]

§ 1.383–1 Special limitations on certain capital losses and excess credits.

(a) *Outline of topics.* In order to facilitate the use of this section, this paragraph lists the paragraphs, subparagraphs and subdivisions contained in this section.

(a) Outline of topics.
(b) In general.
(c) Definitions.
(1) Coordination with definitions and nomenclature used in section 382.
(2) Pre-change capital loss.
(3) Pre-change credit.
(4) Pre-change loss.
(5) Regular tax liability.
(6) Section 383 credit limitation.
(i) Definition.
(ii) Example.
(d) Limitation on use of pre-change losses and pre-change credits.
(1) In general.
(2) Ordering rules for utilization of pre-change losses and pre-change credits and for absorption of the section 382 limitation and the section 383 credit limitation.
(3) Coordination with other limitations.
(i) In general.
(ii) Examples.
(e) Carryforward of unused section 382 limitation.
(1) Computation of carryforward amount.
(2) Section 383 credit reduction amount.
(3) Computation of section 383 credit reduction amount; illustration using tax rates and brackets in effect for calendar year 1988.
(4) Special rules for determining the section 383 credit reduction amount.
(i) Ordering rules.
(ii) Special rule for credits under section 38(a).
(f) Examples.
(g) Coordination with section 382 and the regulations thereunder.
(h) Alternative minimum tax.
(i) [Reserved]
(j) Effective date.
(k) Transitional rules regarding information statements

(b) *In general.* Under section 383, if an ownership change occurs with respect to a loss corporation, the section 382 limitation and the section 383 credit limitation (as defined in paragraph (c)(6) of this section) for a post-change year shall apply to limit the amount of taxable income and regular tax liability, respectively, that can be offset by pre-change capital losses and pre-

change credits of the new loss corporation. The section 383 credit limitation for a post-change year bears a direct relationship to the amount, if any, of the section 382 limitation that remains after taking into account the reduction in the loss corporation's taxable income during a post-change year as a result of its pre-change losses (as defined in paragraph (c)(4) of this section). In general, the section 383 credit limitation is an amount equal to the tax liability of the new loss corporation for the post-change year which is attributable to so much of the corporation's taxable income that would be reduced by allowing as a deduction its section 382 limitation remaining after accounting for the use of pre-change losses. As pre-change losses and pre-change credits of a corporation are used, they absorb the section 382 limitation and the section 383 credit limitation, respectively, in the manner prescribed by paragraph (d) of this section. See also section 382 and the regulations thereunder.

(c) *Definitions*—(1) *Coordination with definitions and nomenclature used in section 382.* Terms and nomenclature used in this section, and not otherwise defined herein, shall have the same respective meanings as in section 382 and the regulations thereunder, taking into account that the limitations of section 383 and this section apply to pre-change capital losses and pre-change credits.

(2) *Pre-change capital loss.* The term *pre-change capital loss* means—

(i) Any capital loss carryover under section 1212 of the old loss corporation to the taxable year ending on the change date or in which the change date occurs,

(ii) Any net capital loss of the old loss corporation for the taxable year in which the ownership change occurs, to the extent such loss is allocable to the period in such year ending on or before the change date, and

(iii) If the old loss corporation has a net unrealized built-in loss, any recognized built-in loss for any recognition period taxable year (within the meaning of section 382(h)) that is a capital loss.

(3) *Pre-change credit.* The term *pre-change credit* means—

(i) Any excess foreign taxes under section 904(c) of the old loss corporation—

(A) carried forward to the taxable year ending on the change date or in which the change date occurs, or

(B) carried forward from the taxable year that includes the change date, to the extent such credit is allocable to the period in such year ending on or before the change date,

(ii) Any credit under section 38 of the old loss corporation—

(A) carried forward to the taxable year ending on the change date or in which the change date occurs, or

(B) carried forward from a taxable year that includes the change date to the extent such credit is allocable to the period in such year ending on or before the change date, and

(iii) The available minimum tax credit of the old loss corporation under section 53 to the extent attributable to periods ending on or before the change date.

(4) *Pre-change loss.* Solely for purposes of this section, the term *prechange loss* means any pre-change loss described in §1.382–2(a)(2) other than pre-change credits described in paragraph (c)(3) of this section.

(5) *Regular tax liability.* For purposes of this section, the term *regular tax liability* has the same meaning as provided in section 26(b).

(6) *Section 383 credit limitation*—(i) *Definition.* The *section 383 credit limitation* for a post-change year of a new loss corporation is an amount equal to the excess of—

(A) The new loss corporation's regular tax liability for the post-change year, over

(B) The new loss corporation's regular tax liability for the post-change year computed, for this purpose, by allowing as an additional deduction an amount equal to the section 382 limitation remaining after the application of paragraphs (d)(2)(i) through (iv) of this section.

(ii) *Example.*

L, a new loss corporation, is a calendar year taxpayer. L has an ownership change on December 31, 1987. For 1988, L has taxable income (prior to the use of any pre-change losses) of $100,000. In addition, L has a section 382 limitation of $25,000, a pre-change net operating loss carryover of $12,000, a pre-

change minimum tax credit of $50,000, and no pre-change capital losses. L's section 383 credit limitation is the excess of its regular tax liability computed after allowing a $12,000 net operating loss deduction (taxable income of $88,000; regular tax liability of $18,170), over its regular tax liability computed after allowing an additional deduction in the amount of L's section 382 limitation remaining after the application of paragraphs (d)(2)(i) through (iv) of this section, or $13,000 (taxable income of $75,000; regular tax liability of $13,750). L's section 383 credit limitation is therefore $4,420 ($18,170 minus $13,750).

(d) *Limitation on use of pre-change losses and pre-change credits*—(1) *In general.* The amount of taxable income of a new loss corporation for any post-change year that may be offset by pre-change losses shall not exceed the amount of the section 382 limitation for the post-change year. The amount of the regular tax liability of a new loss corporation for any post-change year that may be offset by pre-change credits shall not exceed the amount of the section 383 credit limitation for the post-change year.

(2) *Ordering rules for utilization of pre-change losses and pre-change credits and for absorption of the section 382 limitation and the section 383 credit limitation.* Pre-change losses described in any subdivision of this paragraph (d)(2) can offset taxable income in a post-change year only to the extent that the section 382 limitation for that year has not been absorbed by pre-change losses described in any lower-numbered subdivisions. Pre-change credits described in any subdivision of this paragraph (d)(2) can offset regular tax liability in a post-change year only to the extent that the section 383 credit limitation for that year has not been absorbed by pre-change credits described in any lower numbered subdivisions. The section 382 limitation is absorbed by one dollar for each dollar of pre-change loss that is used to offset taxable income. The section 383 credit limitation is absorbed by one dollar for each dollar of pre-change credit that is used to offset regular tax liability. For each post-change year, the section 382 limitation and the section 383 credit limitation of a new loss corporation are absorbed by such corporation's pre-change losses and pre-change credits in the following order:

(i) Pre-change capital losses described in paragraph (c)(2)(iii) of this section that are recognized and are subject to the section 382 limitation in such post-change year,

(ii) Pre-change capital losses described in paragraphs (c)(2)(i) and (ii) of this section,

(iii) Pre-change losses that are described in § 1.382–2(a)(2) (other than losses that are pre-change capital losses) that are recognized and are subject to the section 382 limitation in such post-change year,

(iv) Pre-change losses not described in paragraphs (d)(2)(i) through (iii) of this section,

(v) Pre-change credits described in paragraph (c)(3)(i) of this section (excess foreign taxes),

(vi) Pre-change credits described in paragraph (c)(3)(ii) of this section (business credits), and

(vii) Pre-change credits described in paragraph (c)(3)(iii) of this section (minimum tax credit).

(3) *Coordination with other limitations*—(i) *In general.* Paragraphs (d)(1) and (2) of this section shall be applied after the application of all other limitations contained in subtitle A which are applicable to the use of a pre-change loss or pre-change credit in a post-change year. Thus, only otherwise currently allowable pre-change losses and pre-change credits will result in the absorption of the section 382 limitation and the section 383 credit limitation.

(ii) *Examples:*

Example (1). L is a calendar year taxpayer and has an ownership change on December 31, 1987. For 1988, L has taxable income of $300,000, a regular tax liability of $100,250 and a tentative minimum tax of $90,000. L has no pre-change losses, but has a business credit carryforward from 1985 of $25,000, no portion of which is due to the regular percentage of the investment tax credit under section 46. L has a section 382 limitation for 1988 of $50,000. L's section 383 credit limitation is $19,500, i.e., an amount equal to the excess of L's regular tax liability ($100,250) over its regular tax liability calculated by allowing an additional deduction of $50,000. Pursuant to the limitation contained in section 38(c), however, L is entitled to use only $10,250 of its business credit carryforward in 1988. The unabsorbed portion of L's section 382 limitation (computed pursuant to paragraph (e) of this section) is carried forward under section

382(b)(2). The unused portion of L's business credit carryforward, $14,750, is carried forward to the extent provided in section 39.

Example (2). Assume the same facts as in *Example (1),* except that L's tentative minimum tax is $70,000. L's use of its investment tax credit carryforward is no longer limited by section 38(c); however, pursuant to section 383 and this section, L is entitled to use only $19,500 of its business credit carryforward in 1988. The unused portion of L's business credit carryforward, $5,500, is carried forward to the extent provided in section 39. There is no unused section 382 limitation to be carried forward.

(e) *Carryforward of unused section 382 limitation*—(1) *Computation of carryforward amount.* The section 382 limitation that can be carried forward under section 382(b)(2) is the excess, if any, of (i) the section 382 limitation for the post-change year remaining after the application of paragraphs (d)(2)(i) through (iv) of this section, over (ii) the section 383 credit reduction amount for that post-change year.

(2) *Section 383 credit reduction amount.* The section 383 credit reduction amount for a post-change year is equal to the amount of taxable income attributable to the portion of the new loss corporation's regular tax liability for the year that is offset by pre-change credits. Each dollar of regular tax liability that is offset by a dollar of pre-change credit is divided by the effective marginal rate at which that dollar of tax was imposed to determine the amount of taxable income that resulted in that particular dollar of regular tax liability. The sum of these ''grossed-up'' amounts for the taxable year is the section 383 credit reduction amount. In determining the effective marginal rate at which a dollar of tax was imposed, special rules regarding rates of tax (*e.g.,* sections 11(b)(2) and (15) or taxable income brackets (*e.g.,* section 1561), or both, shall be taken into account. See *Example (3)* in paragraph (f) of this section illustrating the effect of section 1561(a). Paragraph (e)(3) of this section illustrates the gross-up computation of the section 383 credit reduction amount based on the tax table and the rates of tax prescribed by section 11(b) as in effect for taxable years beginning on January 1, 1988.

(3) *Computation of section 383 credit reduction amount; illustration using tax rates and brackets in effect for calendar year 1988.* (i) Assuming no special rules regarding rates of tax or taxable income brackets apply, the section 383 credit reduction amount for a new loss corporation is the sum of the amounts determined under paragraphs (e)(3)(ii), (iii), (iv), (v), and (vi) of this section.

(ii) The amount determined under this subdivision (ii) is the amount (if any) by which pre-change credits offset so much of the new loss corporation's regular tax liability as exceeds $113,900, divided by 0.34.

(iii) The amount determined under this subdivision (e)(3)(iii) is the amount (if any) by which pre-change credits offset so much of the new loss corporation's regular tax liability as exceeds $22,250 (but does not exceed $113,900), divided by 0.39.

(iv) The amount determined under this subdivision (e)(3)(iv) is the amount (if any) by which pre-change credits offset so much of the new loss corporation's regular tax liability as exceeds $13,750 (but does not exceed $22,250), divided by 0.34.

(v) The amount determined under this subdivision (e)(3)(v) is the amount (if any) by which pre-change credits offset so much of the new loss corporation's regular tax liability as exceeds $7,500 (but does not exceed $13,750), divided by 0.25.

(vi) The amount determined under this subdivision (e)(3)(vi) is the amount (if any) by which pre-change credits offset so much of the new loss corporation's regular tax liability as does not exceed $7,500, divided by 0.15.

(4) *Special rules for determining the section 383 credit reduction amount*—(i) *Ordering rules.* For purposes of this paragraph (e), credits, including pre-change credits, are considered to offset regular tax liability in the order that such credits are applied under the ordering rules of part IV of subchapter A of chapter 1 and section 904. For example, for purposes of this paragraph (e), excess foreign taxes carried over under section 904(c) (whether or not a pre-change credit) are considered (under section 38(c)) to offset regular tax liability before the general business credit carryovers to the taxable year

are considered (under section 39) to offset regular tax liability before general business credits arising in the taxable year.

(ii) *Special rule for credits under section 38(a).* For purposes of applying this paragraph (e), credits under section 38(a) that, under section 38(c)(2) as applicable, taking into account amendments made by section 11813 of the Revenue Reconciliation Act of 1990, effectively offset both regular tax liability and the tax imposed by section 55 (relating to minimum tax), are considered to offset regular tax liability.

(f) *Examples.* The following examples illustrate the operation of paragraphs (b) through (e) of this section. For purposes of these examples, the term *modified tax liability* means the amount determined under paragraph (c)(6)(i)(B) of this section.

Example (1). (i) L, a calendar year taxpayer, has an ownership change on December 31, 1987. Before the application of carryovers, L, a new loss corporation, has $60,000 of capital gain, $100,000 of ordinary taxable income and a section 382 limitation of $100,000 for its first post-change year beginning after the change date. L's only carryovers are an $80,000 capital loss carryover and a $100,000 net operating loss carryover. Both carryovers are from taxable years ending before the change date and thus are pre-change losses.

(ii) L first uses $60,000 of its pre-change capital loss carryover to offset its capital gain. This reduces its section 382 limitation to $40,000 (i.e., $100,000−$60,000). L's pre-change net operating loss carryover can therefore be used only to the extent of $40,000. L's remaining $20,000 pre-change capital loss carryover and remaining $60,000 pre-change net operating loss carryover are carried to later years to the extent permitted under this section and sections 172, 382(l)(2) and 1212.

Example (2). (i) L, a calendar year taxpayer, has an ownership change on December 31, 1987. L has $750,000 of ordinary taxable income (before the application of carryovers) and a section 382 limitation of $1,500,000 for 1988. L's only carryovers are from pre-1987 taxable years and consist of a $500,000 net operating loss (''NOL'') carryover and a $200,000 foreign tax credit carryover, all of which may be used under the section 904 limitation. The NOL carryover is a pre-change loss, and the foreign tax credit carryover is a pre-change credit. L has no other credits which can be used for 1988 and is not liable for an alternative minimum tax for 1988.

(ii) The following computation illustrates the application of this section for 1988:

1. Taxable income before carryovers	$750,000
2. Pre-change NOL carryover	500,000
3. Section 382 limitation	1,500,000
4. Amount of pre-change NOL carryover that can be used (lesser of line 1, 2, or 3)	500,000
5. Taxable income (line 1 minus line 4)	250,000
6. Section 382 limitation remaining (line 3 minus line 4)	1,000,000
7. Pre-change credit carryover	200,000
8. Regular tax liability (line 5 × section 11 rates): $50,000×0.15=$7,500 25,000×0.25=6,250 25,000×0.34=8,500 150,000×0.39=58,500	80,750
9. Modified tax liability (line 5 minus line 6 (but not less than zero)) × section 11 rates)	0
10. Section 383 credit limitation (line 8 minus line 9)	80,750
11. Amount of pre-change credits that can be used (lesser of line 7 or line 10)	80,750
12. Amount of pre-change credits to be carried over to 1989 under section 904(c) (line 7 minus line 11)	119,250
13. Section 383 credit reduction amount: ($80,750 minus $22,250)/0.39=$150,000 ($22,250 minus $13,750)/0.34=25,000 ($13,750 minus $7,500)/0.25=25,000 $7,500/0.15=50,000	250,000
14. Section 382 limitation to be carried to 1989 under section 382(b)(2) (Line 6 minus line 13)	750,000

Example (3). (i) Assume the same facts as in *Example (2),* except that, for purposes of section 1561(a), L is a component member of a controlled group of corporations and the taxable income of the controlled group of corporations for 1988 is $2,000,000.

(ii) The following computation illustrates the application of this section for 1988:

1. Taxable income before carryovers	$750,000
2. Pre-change NOL carryover	500,000
3. Section 382 limitation	1,500,000
4. Amount of pre-change NOL carryover that can be used (lesser of line 1, 2, or 3)	500,000
5. Taxable income (line 1 minus line 4)	250,000
6. Section 382 limitation remaining (line 3 minus line 4)	1,000,000
7. Pre-change credit carryover	200,000

8. Regular tax liability (line 5×0.34 (the effective section 11 rate under section 1561(a)))	85,000
9. Modified tax liability (line 5 minus line 6 (but not less than zero)) × section 11 rates)	0
10. Section 383 credit limitation (line 8 minus line 9)	85,000
11. Amount of pre-change credits that can be used (lesser of line 7 or line 10)	85,000
12. Amount of pre-change credits to be carried over to 1989 under section 904(c) (line 7 minus line 11)	115,000
13. Section 383 credit reduction amount (line 11 divided by 0.34)	250,000
14. Section 383 limitation to be carried to 1989 under section 382(b)(2) (line 6 minus line 13)	750,000

Example (4) . (i) L, a calendar year taxpayer, has an ownership change on December 31, 1987. L has $80,000 of ordinary taxable income (before the application of carryovers) and a section 382 limitation of $25,000 for 1988, a post-change year. L's only carryover is from a pre-1987 taxable year and is a general business credit carryforward under section 39 in the amount of $10,000 (no portion of which is attributable to the investment tax credit under section 46). The general business credit carryforward is a pre-change credit. L has no other credits which can be used for 1988 and is not liable for an alternative minimum tax for 1988.

(ii) The following computation illustrates the application of this section:

1. Taxable income	$80,000
2. Section 382 limitation	25,000
3. Pre-change credit carryover	10,000
4. Regular tax liability (line 1 × section 11 rates): $50,000×0.15=$7,500 25,000×0.25=6,250 5,000×0.34=1,700	15,450
5. Modified tax liability ((line 1 minus line 2) × section 11 rates): $50,000×0.15=$7,500 5,000×0.25=1,250	8,750
6. Section 383 credit limitation (line 4 minus line 5)	6,700
7. Amount of pre-change credits that can be used (lesser of line 3 or line 6)	6,700
8. Amount of pre-change credits to be carried over to 1989 under sections 39 and 382(l)(2) (line 3 minus line 7)	3,300
9. Regular tax payable (line 4 minus line 7)	8,750
10. Section 383 credit reduction amount: ($15,450 minus $13,750)/0.34=$5,000 ($13,750 minus $8,750)/0.25=20,000	25,000
11. Section 382 limitation to be carried to 1989 under section 382(b)(2) (line 2 minus line 10)	0

(g) *Coordination with section 382 and the regulations thereunder.* The rules and principles of section 382 (including, for example, section 382(b)(3) and section 382(l)(2)) and the regulations thereunder shall also apply with respect to section 383 and this section. To the extent section 382(h)(6) applies to credits, the principles of this section apply to such credits. In applying the rules and principles of section 382 and the regulations thereunder, appropriate adjustments shall be made to take into account that section 383 and this section apply to pre-change capital losses and pre-change credits. For example, in applying § 1.382–2T (f)(18)(ii)(C), (f)(18)(iii)(C) and (h)(4)(ix), any pre-change credits, as defined in paragraph (c)(3) of this section, must be converted to a deduction equivalent by dividing the amount of such credits by the maximum effective rate of tax provided for under section 11 (e.g., 0.34 for taxable years beginning in 1989).

(h) *Alternative minimum tax.* See § 1.383–2T for the application of the limitations contained in sections 382 and 383 in computing the alternative minimum tax under section 55.

(i) [Reserved]

(j) *Effective date.* Subject to any exception from the application of section 382 or the section 382 limitation with respect to a loss corporation, section 383 and this section apply to any loss corporation with respect to which an ownership change occurs after December 31, 1986. See § 1.382–2T(m) for effective date rules relating to ownership changes. If section 383 was not taken into account or was applied other than in accordance with this section in a prior taxable year with respect to which section 383 applies, the taxpayer should, within the period of limitation, file an amended return and pay any additional tax due plus interest.

(k) Transitional rules regarding information statements—(1) *Exception.*

An information statement described in § 1.382–2T(a)(2)(ii) of this section that would be required to be filed solely by reason of the loss corporation having pre-change capital losses (as defined in § 1.382–2T (a)(2)(ii)(A) and (B) or pre-change credits (as defined in paragraph (c)(3) of this section) is not required to be filed with the income tax return of the loss corporation for any taxable year for which the due date (including extensions) of the income tax return is on or before November 20, 1989, or for which the income tax return is filed on or before October 10, 1989.

(2) *Statement with respect to prior periods.* A corporation which is a loss corporation for any taxable year ending in 1987, 1988 or 1989 solely because it has pre-change capital losses (as defined in paragraphs (c)(2)(i) and (ii) of this section or pre-change credits (as defined in paragraph (c)(3) of this section) must attach a separate information statement to its 1988 and 1989 income tax returns. Such information statement must (i) include the information specified in § 1.382–2T (a)(2)(ii)(A) and (B) (without regard to testing dates before May 6, 1986) for each taxable year ending on or after May 6, 1986 for which the corporation was a loss corporation, (ii) state whether and to what extent pre-change capital losses (as defined in paragraphs (c)(2)(i) and (ii) of this section) or pre-change credits (as defined in paragraph (c)(3) of this section) utilized by the corporation in a taxable year to which the section 382 limitation applied, exceeded the amount permitted under this section, and (iii) be labeled ''Information Statement with Respect to Transition Periods.'' For purposes of the preceding sentence, information previously reported in an information statement, including a statement filed with a 1988 return, may be excluded. The requirements of this paragraph (k)(2) apply only with respect to 1988 and 1989 taxable years with respect to which the due date of the income tax return (including extensions) is after November 20, 1989, and for which the income tax return is not filed on or before October 10, 1989.

[T.D. 8264, 54 FR 38668, Sept. 20, 1989; T.D. 8264, 54 FR 46187, Nov. 1, 1989; T.D. 8264, 54 FR 50043, Dec. 4, 1989. Redesignated and amended by T.D. 8352, 56 FR 29434, June 27, 1991]

§ 1.383–2 Limitations on certain capital losses and excess credits in computing alternative minimum tax. [Reserved]

FINDING AIDS

A list of CFR titles, subtitles, chapters, subchapters and parts and an alphabetical list of agencies publishing in the CFR are included in the CFR Index and Finding Aids volume to the Code of Federal Regulations which is published separately and revised annually.

Table of CFR Titles and Chapters
Alphabetical List of Agencies Appearing in the CFR
Table of OMB Control Numbers
List of CFR Sections Affected

Table of CFR Titles and Chapters

(Revised as of March 31, 1998)

Title 1—General Provisions

I Administrative Committee of the Federal Register (Parts 1—49)
II Office of the Federal Register (Parts 50—299)
IV Miscellaneous Agencies (Parts 400—500)

Title 2—[Reserved]

Title 3—The President

I Executive Office of the President (Parts 100—199)

Title 4—Accounts

I General Accounting Office (Parts 1—99)
II Federal Claims Collection Standards (General Accounting Office—Department of Justice) (Parts 100—299)

Title 5—Administrative Personnel

I Office of Personnel Management (Parts 1—1199)
II Merit Systems Protection Board (Parts 1200—1299)
III Office of Management and Budget (Parts 1300—1399)
IV Advisory Committee on Federal Pay (Parts 1400—1499)
V The International Organizations Employees Loyalty Board (Parts 1500—1599)
VI Federal Retirement Thrift Investment Board (Parts 1600—1699)
VII Advisory Commission on Intergovernmental Relations (Parts 1700—1799)
VIII Office of Special Counsel (Parts 1800—1899)
IX Appalachian Regional Commission (Parts 1900—1999)
XI Armed Forces Retirement Home (Part 2100)
XIV Federal Labor Relations Authority, General Counsel of the Federal Labor Relations Authority and Federal Service Impasses Panel (Parts 2400—2499)
XV Office of Administration, Executive Office of the President (Parts 2500—2599)
XVI Office of Government Ethics (Parts 2600—2699)
XXI Department of the Treasury (Parts 3100—3199)
XXII Federal Deposit Insurance Corporation (Part 3201)
XXIII Department of Energy (Part 3301)

Title 5—Administrative Personnel—Continued

Chap.	
XXIV	Federal Energy Regulatory Commission (Part 3401)
XXV	Department of the Interior (Part 3501)
XXVI	Department of Defense (Part 3601)
XXVIII	Department of Justice (Part 3801)
XXIX	Federal Communications Commission (Parts 3900—3999)
XXX	Farm Credit System Insurance Corporation (Parts 4000—4099)
XXXI	Farm Credit Administration (Parts 4100—4199)
XXXIII	Overseas Private Investment Corporation (Part 4301)
XXXV	Office of Personnel Management (Part 4501)
XL	Interstate Commerce Commission (Part 5001)
XLI	Commodity Futures Trading Commission (Part 5101)
XLII	Department of Labor (Part 5201)
XLIII	National Science Foundation (Part 5301)
XLV	Department of Health and Human Services (Part 5501)
XLVI	Postal Rate Commission (Part 5601)
XLVII	Federal Trade Commission (Part 5701)
XLVIII	Nuclear Regulatory Commission (Part 5801)
L	Department of Transportation (Part 6001)
LII	Export-Import Bank of the United States (Part 6201)
LIII	Department of Education (Parts 6300—6399)
LIV	Environmental Protection Agency (Part 6401)
LVII	General Services Administration (Part 6701)
LVIII	Board of Governors of the Federal Reserve System (Part 6801)
LIX	National Aeronautics and Space Administration (Part 6901)
LX	United States Postal Service (Part 7001)
LXI	National Labor Relations Board (Part 7101)
LXII	Equal Employment Opportunity Commission (Part 7201)
LXIII	Inter-American Foundation (Part 7301)
LXV	Department of Housing and Urban Development (Part 7501)
LXVI	National Archives and Records Administration (Part 7601)
LXIX	Tennessee Valley Authority (Part 7901)
LXXI	Consumer Product Safety Commission (Part 8101)
LXXIV	Federal Mine Safety and Health Review Commission (Part 8401)
LXXVI	Federal Retirement Thrift Investment Board (Part 8601)
LXXVII	Office of Management and Budget (Part 8701)

Title 6—[Reserved]

Title 7—Agriculture

SUBTITLE A—OFFICE OF THE SECRETARY OF AGRICULTURE (PARTS 0—26)

SUBTITLE B—REGULATIONS OF THE DEPARTMENT OF AGRICULTURE

I Agricultural Marketing Service (Standards, Inspections, Marketing Practices), Department of Agriculture (Parts 27—209)

Title 7—Agriculture—Continued

Chap.	
II	Food and Nutrition Service, Department of Agriculture (Parts 210—299)
III	Animal and Plant Health Inspection Service, Department of Agriculture (Parts 300—399)
IV	Federal Crop Insurance Corporation, Department of Agriculture (Parts 400—499)
V	Agricultural Research Service, Department of Agriculture (Parts 500—599)
VI	Natural Resources Conservation Service, Department of Agriculture (Parts 600—699)
VII	Farm Service Agency, Department of Agriculture (Parts 700—799)
VIII	Grain Inspection, Packers and Stockyards Administration (Federal Grain Inspection Service), Department of Agriculture (Parts 800—899)
IX	Agricultural Marketing Service (Marketing Agreements and Orders; Fruits, Vegetables, Nuts), Department of Agriculture (Parts 900—999)
X	Agricultural Marketing Service (Marketing Agreements and Orders; Milk), Department of Agriculture (Parts 1000—1199)
XI	Agricultural Marketing Service (Marketing Agreements and Orders; Miscellaneous Commodities), Department of Agriculture (Parts 1200—1299)
XIII	Northeast Dairy Compact Commission (Parts 1300—1399)
XIV	Commodity Credit Corporation, Department of Agriculture (Parts 1400—1499)
XV	Foreign Agricultural Service, Department of Agriculture (Parts 1500—1599)
XVI	Rural Telephone Bank, Department of Agriculture (Parts 1600—1699)
XVII	Rural Utilities Service, Department of Agriculture (Parts 1700—1799)
XVIII	Rural Housing Service, Rural Business-Cooperative Service, Rural Utilities Service, and Farm Service Agency, Department of Agriculture (Parts 1800—2099)
XXVI	Office of Inspector General, Department of Agriculture (Parts 2600—2699)
XXVII	Office of Information Resources Management, Department of Agriculture (Parts 2700—2799)
XXVIII	Office of Operations, Department of Agriculture (Parts 2800—2899)
XXIX	Office of Energy, Department of Agriculture (Parts 2900—2999)
XXX	Office of the Chief Financial Officer, Department of Agriculture (Parts 3000—3099)
XXXI	Office of Environmental Quality, Department of Agriculture (Parts 3100—3199)
XXXII	[Reserved]
XXXIII	Office of Transportation, Department of Agriculture (Parts 3300—3399)
XXXIV	Cooperative State Research, Education, and Extension Service, Department of Agriculture (Parts 3400—3499)

Title 7—Agriculture—Continued

Chap.	
XXXV	Rural Housing Service, Department of Agriculture (Parts 3500—3599)
XXXVI	National Agricultural Statistics Service, Department of Agriculture (Parts 3600—3699)
XXXVII	Economic Research Service, Department of Agriculture (Parts 3700—3799)
XXXVIII	World Agricultural Outlook Board, Department of Agriculture (Parts 3800—3899)
XLI	[Reserved]
XLII	Rural Business-Cooperative Service and Rural Utilities Service, Department of Agriculture (Parts 4200—4299)

Title 8—Aliens and Nationality

I	Immigration and Naturalization Service, Department of Justice (Parts 1—499)

Title 9—Animals and Animal Products

I	Animal and Plant Health Inspection Service, Department of Agriculture (Parts 1—199)
II	Grain Inspection, Packers and Stockyards Administration (Packers and Stockyards Programs), Department of Agriculture (Parts 200—299)
III	Food Safety and Inspection Service, Meat and Poultry Inspection, Department of Agriculture (Parts 300—599)

Title 10—Energy

I	Nuclear Regulatory Commission (Parts 0—199)
II	Department of Energy (Parts 200—699)
III	Department of Energy (Parts 700—999)
X	Department of Energy (General Provisions) (Parts 1000—1099)
XI	United States Enrichment Corporation (Parts 1100—1199)
XVII	Defense Nuclear Facilities Safety Board (Parts 1700—1799)

Title 11—Federal Elections

I	Federal Election Commission (Parts 1—9099)

Title 12—Banks and Banking

I	Comptroller of the Currency, Department of the Treasury (Parts 1—199)
II	Federal Reserve System (Parts 200—299)
III	Federal Deposit Insurance Corporation (Parts 300—399)
IV	Export-Import Bank of the United States (Parts 400—499)
V	Office of Thrift Supervision, Department of the Treasury (Parts 500—599)
VI	Farm Credit Administration (Parts 600—699)
VII	National Credit Union Administration (Parts 700—799)

Title 12—Banks and Banking—Continued

Chap.

VIII Federal Financing Bank (Parts 800—899)

IX Federal Housing Finance Board (Parts 900—999)

XI Federal Financial Institutions Examination Council (Parts 1100—1199)

XIV Farm Credit System Insurance Corporation (Parts 1400—1499)

XV Thrift Depositor Protection Oversight Board (Parts 1500—1599)

XVII Office of Federal Housing Enterprise Oversight, Department of Housing and Urban Development (Parts 1700-1799)

XVIII Community Development Financial Institutions Fund, Department of the Treasury (Parts 1800—1899)

Title 13—Business Credit and Assistance

I Small Business Administration (Parts 1—199)

III Economic Development Administration, Department of Commerce (Parts 300—399)

Title 14—Aeronautics and Space

I Federal Aviation Administration, Department of Transportation (Parts 1—199)

II Office of the Secretary, Department of Transportation (Aviation Proceedings) (Parts 200—399)

III Commercial Space Transportation, Federal Aviation Administration, Department of Transportation (Parts 400—499)

V National Aeronautics and Space Administration (Parts 1200—1299)

Title 15—Commerce and Foreign Trade

SUBTITLE A—Office of the Secretary of Commerce (Parts 0—29)

SUBTITLE B—Regulations Relating to Commerce and Foreign Trade

I Bureau of the Census, Department of Commerce (Parts 30—199)

II National Institute of Standards and Technology, Department of Commerce (Parts 200—299)

III International Trade Administration, Department of Commerce (Parts 300—399)

IV Foreign-Trade Zones Board, Department of Commerce (Parts 400—499)

VII Bureau of Export Administration, Department of Commerce (Parts 700—799)

VIII Bureau of Economic Analysis, Department of Commerce (Parts 800—899)

IX National Oceanic and Atmospheric Administration, Department of Commerce (Parts 900—999)

XI Technology Administration, Department of Commerce (Parts 1100—1199)

XIII East-West Foreign Trade Board (Parts 1300—1399)

XIV Minority Business Development Agency (Parts 1400—1499)

Title 15—Commerce and Foreign Trade—Continued

Chap.

SUBTITLE C—Regulations Relating to Foreign Trade Agreements

XX Office of the United States Trade Representative (Parts 2000—2099)

SUBTITLE D—Regulations Relating to Telecommunications and Information

XXIII National Telecommunications and Information Administration, Department of Commerce (Parts 2300—2399)

Title 16—Commercial Practices

I Federal Trade Commission (Parts 0—999)

II Consumer Product Safety Commission (Parts 1000—1799)

Title 17—Commodity and Securities Exchanges

I Commodity Futures Trading Commission (Parts 1—199)

II Securities and Exchange Commission (Parts 200—399)

IV Department of the Treasury (Parts 400—499)

Title 18—Conservation of Power and Water Resources

I Federal Energy Regulatory Commission, Department of Energy (Parts 1—399)

III Delaware River Basin Commission (Parts 400—499)

VI Water Resources Council (Parts 700—799)

VIII Susquehanna River Basin Commission (Parts 800—899)

XIII Tennessee Valley Authority (Parts 1300—1399)

Title 19—Customs Duties

I United States Customs Service, Department of the Treasury (Parts 1—199)

II United States International Trade Commission (Parts 200—299)

III International Trade Administration, Department of Commerce (Parts 300—399)

Title 20—Employees' Benefits

I Office of Workers' Compensation Programs, Department of Labor (Parts 1—199)

II Railroad Retirement Board (Parts 200—399)

III Social Security Administration (Parts 400—499)

IV Employees' Compensation Appeals Board, Department of Labor (Parts 500—599)

V Employment and Training Administration, Department of Labor (Parts 600—699)

VI Employment Standards Administration, Department of Labor (Parts 700—799)

VII Benefits Review Board, Department of Labor (Parts 800—899)

VIII Joint Board for the Enrollment of Actuaries (Parts 900—999)

Title 20—Employees' Benefits—Continued

Chap.

IX Office of the Assistant Secretary for Veterans' Employment and Training, Department of Labor (Parts 1000—1099)

Title 21—Food and Drugs

I Food and Drug Administration, Department of Health and Human Services (Parts 1—1299)

II Drug Enforcement Administration, Department of Justice (Parts 1300—1399)

III Office of National Drug Control Policy (Parts 1400—1499)

Title 22—Foreign Relations

I Department of State (Parts 1—199)

II Agency for International Development, International Development Cooperation Agency (Parts 200—299)

III Peace Corps (Parts 300—399)

IV International Joint Commission, United States and Canada (Parts 400—499)

V United States Information Agency (Parts 500—599)

VI United States Arms Control and Disarmament Agency (Parts 600—699)

VII Overseas Private Investment Corporation, International Development Cooperation Agency (Parts 700—799)

IX Foreign Service Grievance Board Regulations (Parts 900—999)

X Inter-American Foundation (Parts 1000—1099)

XI International Boundary and Water Commission, United States and Mexico, United States Section (Parts 1100—1199)

XII United States International Development Cooperation Agency (Parts 1200—1299)

XIII Board for International Broadcasting (Parts 1300—1399)

XIV Foreign Service Labor Relations Board; Federal Labor Relations Authority; General Counsel of the Federal Labor Relations Authority; and the Foreign Service Impasse Disputes Panel (Parts 1400—1499)

XV African Development Foundation (Parts 1500—1599)

XVI Japan-United States Friendship Commission (Parts 1600—1699)

XVII United States Institute of Peace (Parts 1700—1799)

Title 23—Highways

I Federal Highway Administration, Department of Transportation (Parts 1—999)

II National Highway Traffic Safety Administration and Federal Highway Administration, Department of Transportation (Parts 1200—1299)

III National Highway Traffic Safety Administration, Department of Transportation (Parts 1300—1399)

Title 24—Housing and Urban Development

Chap.

SUBTITLE A—Office of the Secretary, Department of Housing and Urban Development (Parts 0—99)

SUBTITLE B—Regulations Relating to Housing and Urban Development

I Office of Assistant Secretary for Equal Opportunity, Department of Housing and Urban Development (Parts 100—199)

II Office of Assistant Secretary for Housing-Federal Housing Commissioner, Department of Housing and Urban Development (Parts 200—299)

III Government National Mortgage Association, Department of Housing and Urban Development (Parts 300—399)

V Office of Assistant Secretary for Community Planning and Development, Department of Housing and Urban Development (Parts 500—599)

VI Office of Assistant Secretary for Community Planning and Development, Department of Housing and Urban Development (Parts 600—699) [Reserved]

VII Office of the Secretary, Department of Housing and Urban Development (Housing Assistance Programs and Public and Indian Housing Programs) (Parts 700—799)

VIII Office of the Assistant Secretary for Housing—Federal Housing Commissioner, Department of Housing and Urban Development (Section 8 Housing Assistance Programs and Section 202 Direct Loan Program) (Parts 800—899)

IX Office of Assistant Secretary for Public and Indian Housing, Department of Housing and Urban Development (Parts 900—999)

X Office of Assistant Secretary for Housing—Federal Housing Commissioner, Department of Housing and Urban Development (Interstate Land Sales Registration Program) (Parts 1700—1799)

XII Office of Inspector General, Department of Housing and Urban Development (Parts 2000—2099)

XX Office of Assistant Secretary for Housing—Federal Housing Commissioner, Department of Housing and Urban Development (Parts 3200—3899)

XXV Neighborhood Reinvestment Corporation (Parts 4100—4199)

Title 25—Indians

I Bureau of Indian Affairs, Department of the Interior (Parts 1—299)

II Indian Arts and Crafts Board, Department of the Interior (Parts 300—399)

III National Indian Gaming Commission, Department of the Interior (Parts 500—599)

IV Office of Navajo and Hopi Indian Relocation (Parts 700—799)

V Bureau of Indian Affairs, Department of the Interior, and Indian Health Service, Department of Health and Human Services (Part 900)

VI Office of the Assistant Secretary-Indian Affairs, Department of the Interior (Part 1001)

Title 25—Indians—Continued

Chap.

VII Office of the Special Trustee for American Indians, Department of the Interior (Part 1200—1299)

Title 26—Internal Revenue

I Internal Revenue Service, Department of the Treasury (Parts 1—799)

Title 27—Alcohol, Tobacco Products and Firearms

I Bureau of Alcohol, Tobacco and Firearms, Department of the Treasury (Parts 1—299)

Title 28—Judicial Administration

I Department of Justice (Parts 0—199)

III Federal Prison Industries, Inc., Department of Justice (Parts 300—399)

V Bureau of Prisons, Department of Justice (Parts 500—599)

VI Offices of Independent Counsel, Department of Justice (Parts 600—699)

VII Office of Independent Counsel (Parts 700—799)

Title 29—Labor

SUBTITLE A—Office of the Secretary of Labor (Parts 0—99)

SUBTITLE B—Regulations Relating to Labor

I National Labor Relations Board (Parts 100—199)

II Office of Labor-Management Standards, Department of Labor (Parts 200—299)

III National Railroad Adjustment Board (Parts 300—399)

IV Office of Labor-Management Standards, Department of Labor (Parts 400—499)

V Wage and Hour Division, Department of Labor (Parts 500—899)

IX Construction Industry Collective Bargaining Commission (Parts 900—999)

X National Mediation Board (Parts 1200—1299)

XII Federal Mediation and Conciliation Service (Parts 1400—1499)

XIV Equal Employment Opportunity Commission (Parts 1600—1699)

XVII Occupational Safety and Health Administration, Department of Labor (Parts 1900—1999)

XX Occupational Safety and Health Review Commission (Parts 2200—2499)

XXV Pension and Welfare Benefits Administration, Department of Labor (Parts 2500—2599)

XXVII Federal Mine Safety and Health Review Commission (Parts 2700—2799)

XL Pension Benefit Guaranty Corporation (Parts 4000—4999)

Title 30—Mineral Resources

Chap.

I Mine Safety and Health Administration, Department of Labor (Parts 1—199)

II Minerals Management Service, Department of the Interior (Parts 200—299)

III Board of Surface Mining and Reclamation Appeals, Department of the Interior (Parts 300—399)

IV Geological Survey, Department of the Interior (Parts 400—499)

VI Bureau of Mines, Department of the Interior (Parts 600—699)

VII Office of Surface Mining Reclamation and Enforcement, Department of the Interior (Parts 700—999)

Title 31—Money and Finance: Treasury

SUBTITLE A—Office of the Secretary of the Treasury (Parts 0—50)

SUBTITLE B—Regulations Relating to Money and Finance

I Monetary Offices, Department of the Treasury (Parts 51—199)

II Fiscal Service, Department of the Treasury (Parts 200—399)

IV Secret Service, Department of the Treasury (Parts 400—499)

V Office of Foreign Assets Control, Department of the Treasury (Parts 500—599)

VI Bureau of Engraving and Printing, Department of the Treasury (Parts 600—699)

VII Federal Law Enforcement Training Center, Department of the Treasury (Parts 700—799)

VIII Office of International Investment, Department of the Treasury (Parts 800—899)

Title 32—National Defense

SUBTITLE A—Department of Defense

I Office of the Secretary of Defense (Parts 1—399)

V Department of the Army (Parts 400—699)

VI Department of the Navy (Parts 700—799)

VII Department of the Air Force (Parts 800—1099)

SUBTITLE B—Other Regulations Relating to National Defense

XII Defense Logistics Agency (Parts 1200—1299)

XVI Selective Service System (Parts 1600—1699)

XIX Central Intelligence Agency (Parts 1900—1999)

XX Information Security Oversight Office, National Archives and Records Administration (Parts 2000—2099)

XXI National Security Council (Parts 2100—2199)

XXIV Office of Science and Technology Policy (Parts 2400—2499)

XXVII Office for Micronesian Status Negotiations (Parts 2700—2799)

XXVIII Office of the Vice President of the United States (Parts 2800—2899)

XXIX Presidential Commission on the Assignment of Women in the Armed Forces (Part 2900)

Title 33—Navigation and Navigable Waters

Chap.

I Coast Guard, Department of Transportation (Parts 1—199)

II Corps of Engineers, Department of the Army (Parts 200—399)

IV Saint Lawrence Seaway Development Corporation, Department of Transportation (Parts 400—499)

Title 34—Education

SUBTITLE A—Office of the Secretary, Department of Education (Parts 1—99)

SUBTITLE B—Regulations of the Offices of the Department of Education

I Office for Civil Rights, Department of Education (Parts 100—199)

II Office of Elementary and Secondary Education, Department of Education (Parts 200—299)

III Office of Special Education and Rehabilitative Services, Department of Education (Parts 300—399)

IV Office of Vocational and Adult Education, Department of Education (Parts 400—499)

V Office of Bilingual Education and Minority Languages Affairs, Department of Education (Parts 500—599)

VI Office of Postsecondary Education, Department of Education (Parts 600—699)

VII Office of Educational Research and Improvement, Department of Education (Parts 700—799)

XI National Institute for Literacy (Parts 1100-1199)

SUBTITLE C—Regulations Relating to Education

XII National Council on Disability (Parts 1200—1299)

Title 35—Panama Canal

I Panama Canal Regulations (Parts 1—299)

Title 36—Parks, Forests, and Public Property

I National Park Service, Department of the Interior (Parts 1—199)

II Forest Service, Department of Agriculture (Parts 200—299)

III Corps of Engineers, Department of the Army (Parts 300—399)

IV American Battle Monuments Commission (Parts 400—499)

V Smithsonian Institution (Parts 500—599)

VII Library of Congress (Parts 700—799)

VIII Advisory Council on Historic Preservation (Parts 800—899)

IX Pennsylvania Avenue Development Corporation (Parts 900—999)

XI Architectural and Transportation Barriers Compliance Board (Parts 1100—1199)

XII National Archives and Records Administration (Parts 1200—1299)

XIV Assassination Records Review Board (Parts 1400-1499)

Title 37—Patents, Trademarks, and Copyrights

Chap.

I Patent and Trademark Office, Department of Commerce (Parts 1—199)

II Copyright Office, Library of Congress (Parts 200—299)

IV Assistant Secretary for Technology Policy, Department of Commerce (Parts 400—499)

V Under Secretary for Technology, Department of Commerce (Parts 500—599)

Title 38—Pensions, Bonuses, and Veterans' Relief

I Department of Veterans Affairs (Parts 0—99)

Title 39—Postal Service

I United States Postal Service (Parts 1—999)

III Postal Rate Commission (Parts 3000—3099)

Title 40—Protection of Environment

I Environmental Protection Agency (Parts 1—799)

V Council on Environmental Quality (Parts 1500—1599)

Title 41—Public Contracts and Property Management

SUBTITLE B—Other Provisions Relating to Public Contracts

50 Public Contracts, Department of Labor (Parts 50–1—50–999)

51 Committee for Purchase From People Who Are Blind or Severely Disabled (Parts 51–1—51–99)

60 Office of Federal Contract Compliance Programs, Equal Employment Opportunity, Department of Labor (Parts 60–1—60–999)

61 Office of the Assistant Secretary for Veterans Employment and Training, Department of Labor (Parts 61–1—61–999)

SUBTITLE C—Federal Property Management Regulations System

101 Federal Property Management Regulations (Parts 101–1—101–99)

105 General Services Administration (Parts 105–1—105–999)

109 Department of Energy Property Management Regulations (Parts 109–1—109–99)

114 Department of the Interior (Parts 114–1—114–99)

115 Environmental Protection Agency (Parts 115–1—115–99)

128 Department of Justice (Parts 128–1—128–99)

SUBTITLE D—Other Provisions Relating to Property Management [Reserved]

SUBTITLE E—Federal Information Resources Management Regulations System

201 Federal Information Resources Management Regulation (Parts 201–1—201–99) [Reserved]

SUBTITLE F—Federal Travel Regulation System

301 Travel Allowances (Parts 301–1—301–99)

302 Relocation Allowances (Parts 302–1—302–99)

Title 41—Public Contracts and Property Management—Continued

Chap.

303 Payment of Expenses Connected with the Death of Certain Employees (Parts 303–1—303–2)

304 Payment from a Non-Federal Source for Travel Expenses (Parts 304–1—304–99)

Title 42—Public Health

I Public Health Service, Department of Health and Human Services (Parts 1—199)

IV Health Care Financing Administration, Department of Health and Human Services (Parts 400—499)

V Office of Inspector General-Health Care, Department of Health and Human Services (Parts 1000—1999)

Title 43—Public Lands: Interior

SUBTITLE A—Office of the Secretary of the Interior (Parts 1—199)

SUBTITLE B—Regulations Relating to Public Lands

I Bureau of Reclamation, Department of the Interior (Parts 200—499)

II Bureau of Land Management, Department of the Interior (Parts 1000—9999)

III Utah Reclamation Mitigation and Conservation Commission (Parts 10000—10005)

Title 44—Emergency Management and Assistance

I Federal Emergency Management Agency (Parts 0—399)

IV Department of Commerce and Department of Transportation (Parts 400—499)

Title 45—Public Welfare

SUBTITLE A—Department of Health and Human Services (Parts 1—199)

SUBTITLE B—Regulations Relating to Public Welfare

II Office of Family Assistance (Assistance Programs), Administration for Children and Families, Department of Health and Human Services (Parts 200—299)

III Office of Child Support Enforcement (Child Support Enforcement Program), Administration for Children and Families, Department of Health and Human Services (Parts 300—399)

IV Office of Refugee Resettlement, Administration for Children and Families Department of Health and Human Services (Parts 400—499)

V Foreign Claims Settlement Commission of the United States, Department of Justice (Parts 500—599)

VI National Science Foundation (Parts 600—699)

VII Commission on Civil Rights (Parts 700—799)

VIII Office of Personnel Management (Parts 800—899)

Title 45—Public Welfare—Continued

Chap.

X Office of Community Services, Administration for Children and Families, Department of Health and Human Services (Parts 1000—1099)

XI National Foundation on the Arts and the Humanities (Parts 1100—1199)

XII Corporation for National and Community Service (Parts 1200—1299)

XIII Office of Human Development Services, Department of Health and Human Services (Parts 1300—1399)

XVI Legal Services Corporation (Parts 1600—1699)

XVII National Commission on Libraries and Information Science (Parts 1700—1799)

XVIII Harry S. Truman Scholarship Foundation (Parts 1800—1899)

XXI Commission on Fine Arts (Parts 2100—2199)

XXII Christopher Columbus Quincentenary Jubilee Commission (Parts 2200—2299)

XXIII Arctic Research Commission (Part 2301)

XXIV James Madison Memorial Fellowship Foundation (Parts 2400—2499)

XXV Corporation for National and Community Service (Parts 2500—2599)

Title 46—Shipping

I Coast Guard, Department of Transportation (Parts 1—199)

II Maritime Administration, Department of Transportation (Parts 200—399)

IV Federal Maritime Commission (Parts 500—599)

Title 47—Telecommunication

I Federal Communications Commission (Parts 0—199)

II Office of Science and Technology Policy and National Security Council (Parts 200—299)

III National Telecommunications and Information Administration, Department of Commerce (Parts 300—399)

Title 48—Federal Acquisition Regulations System

1 Federal Acquisition Regulation (Parts 1—99)

2 Department of Defense (Parts 200—299)

3 Department of Health and Human Services (Parts 300—399)

4 Department of Agriculture (Parts 400—499)

5 General Services Administration (Parts 500—599)

6 Department of State (Parts 600—699)

7 United States Agency for International Development (Parts 700—799)

8 Department of Veterans Affairs (Parts 800—899)

9 Department of Energy (Parts 900—999)

10 Department of the Treasury (Parts 1000—1099)

Title 48—Federal Acquisition Regulations System—Continued

Chap.

12 Department of Transportation (Parts 1200—1299)

13 Department of Commerce (Parts 1300—1399)

14 Department of the Interior (Parts 1400—1499)

15 Environmental Protection Agency (Parts 1500—1599)

16 Office of Personnel Management Federal Employees Health Benefits Acquisition Regulation (Parts 1600—1699)

17 Office of Personnel Management (Parts 1700—1799)

18 National Aeronautics and Space Administration (Parts 1800—1899)

19 United States Information Agency (Parts 1900—1999)

20 Nuclear Regulatory Commission (Parts 2000—2099)

21 Office of Personnel Management, Federal Employees Group Life Insurance Federal Acquisition Regulation (Parts 2100—2199)

23 Social Security Administration (Parts 2300—2399)

24 Department of Housing and Urban Development (Parts 2400—2499)

25 National Science Foundation (Parts 2500—2599)

28 Department of Justice (Parts 2800—2899)

29 Department of Labor (Parts 2900—2999)

34 Department of Education Acquisition Regulation (Parts 3400—3499)

35 Panama Canal Commission (Parts 3500—3599)

44 Federal Emergency Management Agency (Parts 4400—4499)

51 Department of the Army Acquisition Regulations (Parts 5100—5199)

52 Department of the Navy Acquisition Regulations (Parts 5200—5299)

53 Department of the Air Force Federal Acquisition Regulation Supplement (Parts 5300—5399)

54 Defense Logistics Agency, Department of Defense (Part 5452)

57 African Development Foundation (Parts 5700—5799)

61 General Services Administration Board of Contract Appeals (Parts 6100—6199)

63 Department of Transportation Board of Contract Appeals (Parts 6300—6399)

99 Cost Accounting Standards Board, Office of Federal Procurement Policy, Office of Management and Budget (Parts 9900—9999)

Title 49—Transportation

SUBTITLE A—Office of the Secretary of Transportation (Parts 1—99)

SUBTITLE B—Other Regulations Relating to Transportation

I Research and Special Programs Administration, Department of Transportation (Parts 100—199)

II Federal Railroad Administration, Department of Transportation (Parts 200—299)

Title 49—Transportation—Continued

Chap.

III Federal Highway Administration, Department of Transportation (Parts 300—399)

IV Coast Guard, Department of Transportation (Parts 400—499)

V National Highway Traffic Safety Administration, Department of Transportation (Parts 500—599)

VI Federal Transit Administration, Department of Transportation (Parts 600—699)

VII National Railroad Passenger Corporation (AMTRAK) (Parts 700—799)

VIII National Transportation Safety Board (Parts 800—999)

X Surface Transportation Board, Department of Transportation (Parts 1000—1399)

Title 50—Wildlife and Fisheries

I United States Fish and Wildlife Service, Department of the Interior (Parts 1—199)

II National Marine Fisheries Service, National Oceanic and Atmospheric Administration, Department of Commerce (Parts 200—299)

III International Fishing and Related Activities (Parts 300—399)

IV Joint Regulations (United States Fish and Wildlife Service, Department of the Interior and National Marine Fisheries Service, National Oceanic and Atmospheric Administration, Department of Commerce); Endangered Species Committee Regulations (Parts 400—499)

V Marine Mammal Commission (Parts 500—599)

VI Fishery Conservation and Management, National Oceanic and Atmospheric Administration, Department of Commerce (Parts 600—699)

CFR Index and Finding Aids

Subject/Agency Index

List of Agency Prepared Indexes

Parallel Tables of Statutory Authorities and Rules

List of CFR Titles, Chapters, Subchapters, and Parts

Alphabetical List of Agencies Appearing in the CFR

Alphabetical List of Agencies Appearing in the CFR

(Revised as of March 31, 1998)

Agency	CFR Title, Subtitle or Chapter
ACTION	45, XII
Administrative Committee of the Federal Register	1, I
Advanced Research Projects Agency	32, I
Advisory Commission on Intergovernmental Relations	5, VII
Advisory Committee on Federal Pay	5, IV
Advisory Council on Historic Preservation	36, VIII
African Development Foundation	22, XV
Federal Acquisition Regulation	48, 57
Agency for International Development, United States	22, II
Federal Acquisition Regulation	48, 7
Agricultural Marketing Service	7, I, IX, X, XI
Agricultural Research Service	7, V
Agriculture Department	
Agricultural Marketing Service	7, I, IX, X, XI
Agricultural Research Service	7, V
Animal and Plant Health Inspection Service	7, III; 9, I
Chief Financial Officer, Office of	7, XXX
Commodity Credit Corporation	7, XIV
Cooperative State Research, Education, and Extension Service	7, XXXIV
Economic Research Service	7, XXXVII
Energy, Office of	7, XXIX
Environmental Quality, Office of	7, XXXI
Farm Service Agency	7, VII, XVIII
Federal Acquisition Regulation	48, 4
Federal Crop Insurance Corporation	7, IV
Food and Consumer Service	7, II
Food Safety and Inspection Service	9, III
Foreign Agricultural Service	7, XV
Forest Service	36, II
Grain Inspection, Packers and Stockyards Administration	7, VIII; 9, II
Information Resources Management, Office of	7, XXVII
Inspector General, Office of	7, XXVI
National Agricultural Library	7, XLI
National Agricultural Statistics Service	7, XXXVI
Natural Resources Conservation Service	7, VI
Operations, Office of	7, XXVIII
Rural Business-Cooperative Service	7, XVIII, XLII
Rural Development Administration	7, XLII
Rural Housing Service	7, XVIII, XXXV
Rural Telephone Bank	7, XVI
Rural Utilities Service	7, XVII, XVIII, XLII
Secretary of Agriculture, Office of	7, Subtitle A
Transportation, Office of	7, XXXIII
World Agricultural Outlook Board	7, XXXVIII
Air Force Department	32, VII
Federal Acquisition Regulation Supplement	48, 53
Alaska Natural Gas Transportation System, Office of the Federal Inspector	10, XV
Alcohol, Tobacco and Firearms, Bureau of	27, I
AMTRAK	49, VII
American Battle Monuments Commission	36, IV
American Indians, Office of the Special Trustee	25, VII

Agency	CFR Title, Subtitle or Chapter
Animal and Plant Health Inspection Service	7, III; 9, I
Appalachian Regional Commission	5, IX
Architectural and Transportation Barriers Compliance Board	36, XI
Arctic Research Commission	45, XXIII
Armed Forces Retirement Home	5, XI
Arms Control and Disarmament Agency, United States	22, VI
Army Department	32, V
Engineers, Corps of	33, II; 36, III
Federal Acquisition Regulation	48, 51
Assassination Records Review Board	36, XIV
Benefits Review Board	20, VII
Bilingual Education and Minority Languages Affairs, Office of	34, V
Blind or Severely Disabled, Committee for Purchase From People Who Are	41, 51
Board for International Broadcasting	22, XIII
Census Bureau	15, I
Central Intelligence Agency	32, XIX
Chief Financial Officer, Office of	7, XXX
Child Support Enforcement, Office of	45, III
Children and Families, Administration for	45, II, III, IV, X
Christopher Columbus Quincentenary Jubilee Commission	45, XXII
Civil Rights, Commission on	45, VII
Civil Rights, Office for	34, I
Coast Guard	33, I; 46, I; 49, IV
Commerce Department	44, IV
Census Bureau	15, I‘
Economic Affairs, Under Secretary	37, V
Economic Analysis, Bureau of	15, VIII
Economic Development Administration	13, III
Emergency Management and Assistance	44, IV
Export Administration, Bureau of	15, VII
Federal Acquisition Regulation	48, 13
Fishery Conservation and Management	50, VI
Foreign-Trade Zones Board	15, IV
International Trade Administration	15, III; 19, III
National Institute of Standards and Technology	15, II
National Marine Fisheries Service	50, II, IV
National Oceanic and Atmospheric Administration	15, IX; 50, II, III, IV, VI
National Telecommunications and Information Administration	15, XXIII; 47, III
National Weather Service	15, IX
Patent and Trademark Office	37, I
Productivity, Technology and Innovation, Assistant Secretary for	37, IV
Secretary of Commerce, Office of	15, Subtitle A
Technology, Under Secretary for	37, V
Technology Administration	15, XI
Technology Policy, Assistant Secretary for	37, IV
Commercial Space Transportation	14, III
Commodity Credit Corporation	7, XIV
Commodity Futures Trading Commission	5, XLI; 17, I
Community Planning and Development, Office of Assistant Secretary for	24, V, VI
Community Services, Office of	45, X
Comptroller of the Currency	12, I
Construction Industry Collective Bargaining Commission	29, IX
Consumer Product Safety Commission	5, LXXI; 16, II
Cooperative State Research, Education, and Extension Service	7, XXXIV
Copyright Office	37, II
Cost Accounting Standards Board	48, 99
Council on Environmental Quality	40, V
Customs Service, United States	19, I
Defense Contract Audit Agency	32, I
Defense Department	5, XXVI; 32, Subtitle A
Advanced Research Projects Agency	32, I
Air Force Department	32, VII

Agency	CFR Title, Subtitle or Chapter
Army Department	32, V; 33, II; 36, III, 48, 51
Defense Intelligence Agency	32, I
Defense Logistics Agency	32, I, XII; 48, 54
Engineers, Corps of	33, II; 36, III
Federal Acquisition Regulation	48, 2
National Imagery and Mapping Agency	32, I
Navy Department	32, VI; 48, 52
Secretary of Defense, Office of	32, I
Defense Contract Audit Agency	32, I
Defense Intelligence Agency	32, I
Defense Logistics Agency	32, XII; 48, 54
Defense Nuclear Facilities Safety Board	10, XVII
Delaware River Basin Commission	18, III
Drug Enforcement Administration	21, II
East-West Foreign Trade Board	15, XIII
Economic Affairs, Under Secretary	37, V
Economic Analysis, Bureau of	15, VIII
Economic Development Administration	13, III
Economic Research Service	7, XXXVII
Education, Department of	5, LIII
Bilingual Education and Minority Languages Affairs, Office of	34, V
Civil Rights, Office for	34, I
Educational Research and Improvement, Office of	34, VII
Elementary and Secondary Education, Office of	34, II
Federal Acquisition Regulation	48, 34
Postsecondary Education, Office of	34, VI
Secretary of Education, Office of	34, Subtitle A
Special Education and Rehabilitative Services, Office of	34, III
Vocational and Adult Education, Office of	34, IV
Educational Research and Improvement, Office of	34, VII
Elementary and Secondary Education, Office of	34, II
Employees' Compensation Appeals Board	20, IV
Employees Loyalty Board	5, V
Employment and Training Administration	20, V
Employment Standards Administration	20, VI
Endangered Species Committee	50, IV
Energy, Department of	5, XXIII; 10, II, III, X
Federal Acquisition Regulation	48, 9
Federal Energy Regulatory Commission	5, XXIV; 18, I
Property Management Regulations	41, 109
Energy, Office of	7, XXIX
Engineers, Corps of	33, II; 36, III
Engraving and Printing, Bureau of	31, VI
Enrichment Corporation, United States	10, XI
Environmental Protection Agency	5, LIV; 40, I
Federal Acquisition Regulation	48, 15
Property Management Regulations	41, 115
Environmental Quality, Office of	7, XXXI
Equal Employment Opportunity Commission	5, LXII; 29, XIV
Equal Opportunity, Office of Assistant Secretary for	24, I
Executive Office of the President	3, I
Administration, Office of	5, XV
Environmental Quality, Council on	40, V
Management and Budget, Office of	25, III, LXXVII; 48, 99
National Drug Control Policy, Office of	21, III
National Security Council	32, XXI; 47, 2
Presidential Documents	3
Science and Technology Policy, Office of	32, XXIV; 47, II
Trade Representative, Office of the United States	15, XX
Export Administration, Bureau of	15, VII
Export-Import Bank of the United States	5, LII; 12, IV
Family Assistance, Office of	45, II
Farm Credit Administration	5, XXXI; 12, VI
Farm Credit System Insurance Corporation	5, XXX; 12, XIV
Farm Service Agency	7, VII, XVIII

Agency	CFR Title, Subtitle or Chapter
Federal Acquisition Regulation	48, 1
Federal Aviation Administration	14, I
Commercial Space Transportation	14, III
Federal Claims Collection Standards	4, II
Federal Communications Commission	5, XXIX; 47, I
Federal Contract Compliance Programs, Office of	41, 60
Federal Crop Insurance Corporation	7, IV
Federal Deposit Insurance Corporation	5, XXII; 12, III
Federal Election Commission	11, I
Federal Emergency Management Agency	44, I
Federal Acquisition Regulation	48, 44
Federal Employees Group Life Insurance Federal Acquisition Regulation	48, 21
Federal Employees Health Benefits Acquisition Regulation	48, 16
Federal Energy Regulatory Commission	5, XXIV; 18, I
Federal Financial Institutions Examination Council	12, XI
Federal Financing Bank	12, VIII
Federal Highway Administration	23, I, II; 49, III
Federal Home Loan Mortgage Corporation	1, IV
Federal Housing Enterprise Oversight Office	12, XVII
Federal Housing Finance Board	12, IX
Federal Inspector for the Alaska Natural Gas Transportation System, Office of	10, XV
Federal Labor Relations Authority, and General Counsel of the Federal Labor Relations Authority	5, XIV; 22, XIV
Federal Law Enforcement Training Center	31, VII
Federal Maritime Commission	46, IV
Federal Mediation and Conciliation Service	29, XII
Federal Mine Safety and Health Review Commission	5, LXXIV; 29, XXVII
Federal Pay, Advisory Committee on	5, IV
Federal Prison Industries, Inc.	28, III
Federal Procurement Policy Office	48, 99
Federal Property Management Regulations	41, 101
Federal Property Management Regulations System	41, Subtitle C
Federal Railroad Administration	49, II
Federal Register, Administrative Committee of	1, I
Federal Register, Office of	1, II
Federal Reserve System	12, II
Board of Governors	5, LVIII
Federal Retirement Thrift Investment Board	5, VI, LXXVI
Federal Service Impasses Panel	5, XIV
Federal Trade Commission	5, XLVII; 16, I
Federal Transit Administration	49, VI
Federal Travel Regulation System	41, Subtitle F
Fine Arts, Commission on	45, XXI
Fiscal Service	31, II
Fish and Wildlife Service, United States	50, I, IV
Fishery Conservation and Management	50, VI
Food and Drug Administration	21, I
Food and Consumer Service	7, II
Food Safety and Inspection Service	9, III
Foreign Agricultural Service	7, XV
Foreign Assets Control, Office of	31, V
Foreign Claims Settlement Commission of the United States	45, V
Foreign Service Grievance Board	22, IX
Foreign Service Impasse Disputes Panel	22, XIV
Foreign Service Labor Relations Board	22, XIV
Foreign-Trade Zones Board	15, IV
Forest Service	36, II
General Accounting Office	4, I, II
General Services Administration	5, LVII
Contract Appeals, Board of	48, 61
Federal Acquisition Regulation	48, 5
Federal Property Management Regulations System	41, 101, 105
Federal Travel Regulation System	41, Subtitle F
Payment From a Non-Federal Source for Travel Expenses	41, 304
Payment of Expenses Connected With the Death of Certain Employees	41, 303

Agency	CFR Title, Subtitle or Chapter
Relocation Allowances	41, 302
Travel Allowances	41, 301
Geological Survey	30, IV
Government Ethics, Office of	5, XVI
Government National Mortgage Association	24, III
Grain Inspection, Packers and Stockyards Administration	7, VIII; 9, II
Great Lakes Pilotage	46, III
Harry S. Truman Scholarship Foundation	45, XVIII
Health and Human Services, Department of	5, XLV; 45, Subtitle A
Child Support Enforcement, Office of	45, III
Children and Families, Administration for	45, II, III, IV, X
Community Services, Office of	45, X
Family Assistance, Office of	45, II
Federal Acquisition Regulation	48, 3
Food and Drug Administration	21, I
Health Care Financing Administration	42, IV
Human Development Services, Office of	45, XIII
Indian Health Service	25, V
Inspector General (Health Care), Office of	42, V
Public Health Service	42, I
Refugee Resettlement, Office of	45, IV
Health Care Financing Administration	42, IV
Housing and Urban Development, Department of	5, LXV; 24, Subtitle B
Community Planning and Development, Office of Assistant Secretary for	24, V, VI
Equal Opportunity, Office of Assistant Secretary for	24, I
Federal Acquisition Regulation	48, 24
Federal Housing Enterprise Oversight, Office of	12, XVII
Government National Mortgage Association	24, III
Housing—Federal Housing Commissioner, Office of Assistant Secretary for	24, II, VIII, X, XX
Inspector General, Office of	24, XII
Public and Indian Housing, Office of Assistant Secretary for	24, IX
Secretary, Office of	24, Subtitle A, VII
Housing—Federal Housing Commissioner, Office of Assistant Secretary for	24, II, VIII, X, XX
Human Development Services, Office of	45, XIII
Immigration and Naturalization Service	8, I
Independent Counsel, Office of	28, VII
Indian Affairs, Bureau of	25, I, V
Indian Affairs, Office of the Assistant Secretary	25, VI
Indian Arts and Crafts Board	25, II
Indian Health Service	25, V
Information Agency, United States	22, V
Federal Acquisition Regulation	48, 19
Information Resources Management, Office of	7, XXVII
Information Security Oversight Office, National Archives and Records Administration	32, XX
Inspector General	
Agriculture Department	7, XXVI
Health and Human Services Department	42, V
Housing and Urban Development Department	24, XII
Institute of Peace, United States	22, XVII
Inter-American Foundation	5, LXIII; 22, X
Intergovernmental Relations, Advisory Commission on	5, VII
Interior Department	
American Indians, Office of the Special Trustee	25, VII
Endangered Species Committee	50, IV
Federal Acquisition Regulation	48, 14
Federal Property Management Regulations System	41, 114
Fish and Wildlife Service, United States	50, I, IV
Geological Survey	30, IV
Indian Affairs, Bureau of	25, I, V
Indian Affairs, Office of the Assistant Secretary	25, VI
Indian Arts and Crafts Board	25, II
Land Management, Bureau of	43, II
Minerals Management Service	30, II

Agency	CFR Title, Subtitle or Chapter
Mines, Bureau of	30, VI
National Indian Gaming Commission	25, III
National Park Service	36, I
Reclamation, Bureau of	43, I
Secretary of the Interior, Office of	43, Subtitle A
Surface Mining and Reclamation Appeals, Board of	30, III
Surface Mining Reclamation and Enforcement, Office of	30, VII
Internal Revenue Service	26, I
International Boundary and Water Commission, United States and Mexico, United States Section	22, XI
International Development, United States Agency for	22, II
Federal Acquisition Regulation	48, 7
International Development Cooperation Agency, United States	22, XII
International Development, United States Agency for	22, II; 48, 7
Overseas Private Investment Corporation	5, XXXIII; 22, VII
International Fishing and Related Activities	50, III
International Investment, Office of	31, VIII
International Joint Commission, United States and Canada	22, IV
International Organizations Employees Loyalty Board	5, V
International Trade Administration	15, III; 19, III
International Trade Commission, United States	19, II
Interstate Commerce Commission	5, XL
James Madison Memorial Fellowship Foundation	45, XXIV
Japan–United States Friendship Commission	22, XVI
Joint Board for the Enrollment of Actuaries	20, VIII
Justice Department	5, XXVIII; 28, I
Drug Enforcement Administration	21, II
Federal Acquisition Regulation	48, 28
Federal Claims Collection Standards	4, II
Federal Prison Industries, Inc.	28, III
Foreign Claims Settlement Commission of the United States	45, V
Immigration and Naturalization Service	8, I
Offices of Independent Counsel	28, VI
Prisons, Bureau of	28, V
Property Management Regulations	41, 128
Labor Department	5, XLII
Benefits Review Board	20, VII
Employees' Compensation Appeals Board	20, IV
Employment and Training Administration	20, V
Employment Standards Administration	20, VI
Federal Acquisition Regulation	48, 29
Federal Contract Compliance Programs, Office of	41, 60
Federal Procurement Regulations System	41, 50
Labor-Management Standards, Office of	29, II, IV
Mine Safety and Health Administration	30, I
Occupational Safety and Health Administration	29, XVII
Pension and Welfare Benefits Administration	29, XXV
Public Contracts	41, 50
Secretary of Labor, Office of	29, Subtitle A
Veterans' Employment and Training, Office of the Assistant Secretary for	41, 61; 20, IX
Wage and Hour Division	29, V
Workers' Compensation Programs, Office of	20, I
Labor-Management Standards, Office of	29, II, IV
Land Management, Bureau of	43, II
Legal Services Corporation	45, XVI
Library of Congress	36, VII
Copyright Office	37, II
Management and Budget, Office of	5, III, LXXVII; 48, 99
Marine Mammal Commission	50, V
Maritime Administration	46, II
Merit Systems Protection Board	5, II
Micronesian Status Negotiations, Office for	32, XXVII
Mine Safety and Health Administration	30, I
Minerals Management Service	30, II

Agency	CFR Title, Subtitle or Chapter
Mines, Bureau of	30, VI
Minority Business Development Agency	15, XIV
Miscellaneous Agencies	1, IV
Monetary Offices	31, I
National Aeronautics and Space Administration	5, LIX; 14, V
Federal Acquisition Regulation	48, 18
National Agricultural Library	7, XLI
National Agricultural Statistics Service	7, XXXVI
National Archives and Records Administration	5, LXVI; 36, XII
Information Security Oversight Office	32, XX
National Bureau of Standards	15, II
National Capital Planning Commission	1, IV
National Commission for Employment Policy	1, IV
National Commission on Libraries and Information Science	45, XVII
National and Community Service, Corporation for	45, XXV
National Council on Disability	34, XII
National Credit Union Administration	12, VII
National Drug Control Policy, Office of	21, III
National Foundation on the Arts and the Humanities	45, XI
National Highway Traffic Safety Administration	23, II, III; 49, V
National Imagery and Mapping Agency	32, I
National Indian Gaming Commission	25, III
National Institute for Literacy	34, XI
National Institute of Standards and Technology	15, II
National Labor Relations Board	5, LXI; 29, I
National Marine Fisheries Service	50, II, IV
National Mediation Board	29, X
National Oceanic and Atmospheric Administration	15, IX; 50, II, III, IV, VI
National Park Service	36, I
National Railroad Adjustment Board	29, III
National Railroad Passenger Corporation (AMTRAK)	49, VII
National Science Foundation	5, XLIII; 45, VI
Federal Acquisition Regulation	48, 25
National Security Council	32, XXI
National Security Council and Office of Science and Technology Policy	47, II
National Telecommunications and Information Administration	15, XXIII; 47, III
National Transportation Safety Board	49, VIII
National Weather Service	15, IX
Natural Resources Conservation Service	7, VI
Navajo and Hopi Indian Relocation, Office of	25, IV
Navy Department	32, VI
Federal Acquisition Regulation	48, 52
Neighborhood Reinvestment Corporation	24, XXV
Northeast Dairy Compact Commission	7, XIII
Nuclear Regulatory Commission	5, XLVIII; 10, I
Federal Acquisition Regulation	48, 20
Occupational Safety and Health Administration	29, XVII
Occupational Safety and Health Review Commission	29, XX
Offices of Independent Counsel	28, VI
Operations Office	7, XXVIII
Overseas Private Investment Corporation	5, XXXIII; 22, VII
Panama Canal Commission	48, 35
Panama Canal Regulations	35, I
Patent and Trademark Office	37, I
Payment From a Non-Federal Source for Travel Expenses	41, 304
Payment of Expenses Connected With the Death of Certain Employees	41, 303
Peace Corps	22, III
Pennsylvania Avenue Development Corporation	36, IX
Pension and Welfare Benefits Administration	29, XXV
Pension Benefit Guaranty Corporation	29, XL
Personnel Management, Office of	5, I, XXXV; 45, VIII
Federal Acquisition Regulation	48, 17
Federal Employees Group Life Insurance Federal Acquisition Regulation	48, 21

Agency	CFR Title, Subtitle or Chapter
Federal Employees Health Benefits Acquisition Regulation	48, 16
Postal Rate Commission	5, XLVI; 39, III
Postal Service, United States	5, LX; 39, I
Postsecondary Education, Office of	34, VI
President's Commission on White House Fellowships	1, IV
Presidential Commission on the Assignment of Women in the Armed Forces	32, XXIX
Presidential Documents	3
Prisons, Bureau of	28, V
Productivity, Technology and Innovation, Assistant Secretary	37, IV
Public Contracts, Department of Labor	41, 50
Public and Indian Housing, Office of Assistant Secretary for	24, IX
Public Health Service	42, I
Railroad Retirement Board	20, II
Reclamation, Bureau of	43, I
Refugee Resettlement, Office of	45, IV
Regional Action Planning Commissions	13, V
Relocation Allowances	41, 302
Research and Special Programs Administration	49, I
Rural Business-Cooperative Service	7, XVIII, XLII
Rural Development Administration	7, XLII
Rural Housing Service	7, XVIII, XXXV
Rural Telephone Bank	7, XVI
Rural Utilities Service	7, XVII, XVIII, XLII
Saint Lawrence Seaway Development Corporation	33, IV
Science and Technology Policy, Office of	32, XXIV
Science and Technology Policy, Office of, and National Security Council	47, II
Secret Service	31, IV
Securities and Exchange Commission	17, II
Selective Service System	32, XVI
Small Business Administration	13, I
Smithsonian Institution	36, V
Social Security Administration	20, III; 48, 23
Soldiers' and Airmen's Home, United States	5, XI
Special Counsel, Office of	5, VIII
Special Education and Rehabilitative Services, Office of	34, III
State Department	22, I
Federal Acquisition Regulation	48, 6
Surface Mining and Reclamation Appeals, Board of	30, III
Surface Mining Reclamation and Enforcement, Office of	30, VII
Surface Transportation Board	49, X
Susquehanna River Basin Commission	18, VIII
Technology Administration	15, XI
Technology Policy, Assistant Secretary for	37, IV
Technology, Under Secretary for	37, V
Tennessee Valley Authority	5, LXIX; 18, XIII
Thrift Depositor Protection Oversight Board	12, XV
Thrift Supervision Office, Department of the Treasury	12, V
Trade Representative, United States, Office of	15, XX
Transportation, Department of	5, L
Coast Guard	33, I; 46, I; 49, IV
Commercial Space Transportation	14, III
Contract Appeals, Board of	48, 63
Emergency Management and Assistance	44, IV
Federal Acquisition Regulation	48, 12
Federal Aviation Administration	14, I
Federal Highway Administration	23, I, II; 49, III
Federal Railroad Administration	49, II
Federal Transit Administration	49, VI
Maritime Administration	46, II
National Highway Traffic Safety Administration	23, II, III; 49, V
Research and Special Programs Administration	49, I
Saint Lawrence Seaway Development Corporation	33, IV
Secretary of Transportation, Office of	14, II; 49, Subtitle A
Surface Transportation Board	49, X

Agency	CFR Title, Subtitle or Chapter
Transportation, Office of	7, XXXIII
Travel Allowances	41, 301
Treasury Department	5, XXI; 17, IV
Alcohol, Tobacco and Firearms, Bureau of	27, I
Community Development Financial Institutions Fund	12, XVIII
Comptroller of the Currency	12, I
Customs Service, United States	19, I
Engraving and Printing, Bureau of	31, VI
Federal Acquisition Regulation	48, 10
Federal Law Enforcement Training Center	31, VII
Fiscal Service	31, II
Foreign Assets Control, Office of	31, V
Internal Revenue Service	26, I
International Investment, Office of	31, VIII
Monetary Offices	31, I
Secret Service	31, IV
Secretary of the Treasury, Office of	31, Subtitle A
Thrift Supervision, Office of	12, V
Truman, Harry S. Scholarship Foundation	45, XVIII
United States and Canada, International Joint Commission	22, IV
United States and Mexico, International Boundary and Water Commission, United States Section	22, XI
United States Enrichment Corporation	10, XI
Utah Reclamation Mitigation and Conservation Commission	43, III
Veterans Affairs Department	38, I
Federal Acquisition Regulation	48, 8
Veterans' Employment and Training, Office of the Assistant Secretary for	41, 61; 20, IX
Vice President of the United States, Office of	32, XXVIII
Vocational and Adult Education, Office of	34, IV
Wage and Hour Division	29, V
Water Resources Council	18, VI
Workers' Compensation Programs, Office of	20, I
World Agricultural Outlook Board	7, XXXVIII

Table of OMB Control Numbers

The OMB control numbers for chapter I of title 26 were consolidated into §§601.9000 and 602.101 at 50 FR 10221, Mar. 14, 1985. At 61 FR 58008, Nov. 12, 1996, §601.9000 was removed. Section 602.101 is reprinted below for the convenience of the user.

PART 602—OMB CONTROL NUMBERS UNDER THE PAPERWORK REDUCTION ACT

§602.101 OMB Control numbers.

(a) *Purpose.* This part collects and displays the control numbers assigned to collections of information in Internal Revenue Service regulations by the Office of Management and Budget (OMB) under the Paperwork Reduction Act of 1980. The Internal Revenue Service intends that this part (together with 26 CFR 601.9000) comply with the requirements of §§1320.7(f), 1320.12, 1320.13, and 1320.14 of 5 CFR part 1320 (OMB regulations implementing the Paperwork Reduction Act), for the display of control numbers assigned by OMB to collections of information in Internal Revenue Service regulations. This part does not display control numbers assigned by the Office of Management and Budget to collections of information of the Bureau of Alcohol, Tobacco, and Firearms.

(b) *Cross-reference.* For display of control numbers assigned by the Office of Management and Budget to Internal Revenue Service collections of information in the Statement of Procedural Rules (26 CFR part 601), see 26 CFR 601.9000.

(c) *Display.*

CFR part or section where identified and described	Current OMB control No.
1.23–5	1545–0074
1.25–1T	1545–0922
	1545–0930
1.25–2T	1545–0922
	1545–0930
1.25–3T	1545–0922
	1545–0930
1.25–4T	1545–0922
1.25–5T	1545–0922
1.25–6T	1545–0922
1.25–7T	1545–0922
1.25–8T	1545–0922
1.28–1	1545–0619
1.31–2	1545–0074
1.32–2	1545–0074
1.37–1	1545–0074
1.37–3	1545–0074
1.41–2	1545–0619
1.41–3	1545–0619
1.41–4A	1545–0074
1.41–4 (b) and (c)	1545–0074
1.41–8(d)	1545–0732
1.41–9	1545–0619
1.42–1T	1545–0984
	1545–0988
1.42–2	1545–1005
1.42–5	1545–1291
1.42–6	1545–1102
1.42–8	1545–1102
1.42–10	1545–1102
1.42–13	1545–1357
1.42–14	1545–1423
1.43–3(a)(3)	1545–1292
1.43–3(b)(3)	1545–1292
1.44A–1	1545–0068
1.44A–3	1545–0074
1.44B–1	1545–0219
1.458–1	1545–0879
1.458–2	1545–0152
1.46–1	1545–0123
	1545–0155
1.46–3	1545–0155
1.46–4	1545–0155
1.46–5	1545–0155
1.46–6	1545–0155
1.46–8	1545–0155
1.46–9	1545–0155
1.46–10	1545–0118
1.46–11	1545–0155
1.47–1	1545–0166
	1545–0155
1.47–3	1545–0166
	1545–0155
1.47–4	1545–0123
1.47–5	1545–0092
1.47–6	1545–0099
1.48–3	1545–0155
1.48–4	1545–0808
	1545–0155
1.48–5	1545–0155
1.48–6	1545–0155
1.48–12	1545–0155
1.50A–1	1545–0895
1.50A–2	1545–0895
1.50A–3	1545–0895
1.50A–4	1545–0895
1.50A–5	1545–0895
1.50A–6	1545–0895

CFR part or section where identified and described	Current OMB control No.
1.50A–7	1545–0895
1.50B–1	1545–0895
1.50B–2	1545–0895
1.50B–3	1545–0895
1.50B–4	1545–0895
1.50B–5	1545–0895
1.51–1	1545–0219
	1545–0241
	1545–0244
	1545–0797
1.52–2	1545–0219
1.52–3	1545–0219
1.56–1	1545–0123
1.56(g)–1	1545–1233
1.56A–1	1545–0227
1.56A–2	1545–0227
1.56A–3	1545–0227
1.56A–4	1545–0227
1.56A–5	1545–0227
1.57–5	1545–0227
1.58–1	1545–0175
1.58–9(c)(5)(iii)(B)	1545–1093
1.58–9(e)(3)	1545–1093
1.61–2	1545–0771
1.61–2T	1545–0771
1.61–4	1545–0187
1.61–15	1545–0074
1.62–2	1545–1148
1.63–1	1545–0074
1.67–2T	1545–0110
1.67–3T	1545–0118
1.67–3	1545–1018
1.71–1T	1545–0074
1.72–4	1545–0074
1.72–6	1545–0074
1.72–9	1545–0074
1.72–17	1545–0074
1.72–17A	1545–0074
1.72–18	1545–0074
1.74–1	1545–1100
1.79–2	1545–0074
1.79–3	1545–0074
1.83–2	1545–0074
1.83–5	1545–0074
1.83–6	1545–1448
1.103–10	1545–0123
	1545–0940
1.103–15AT	1545–0720
1.103–18	1545–1226
1.103(n)–2T	1545–0874
1.103(n)–4T	1545–0874
1.103A–2	1545–0720
1.105–4	1545–0074
1.105–5	1545–0074
1.105–6	1545–0074
1.108(a)–1	1545–0046
1.108(a)–2	1545–0046
1.108(c)–1	1545–1421
1.117–5	1545–0869
1.119–1	1545–0067
1.120–3	1545–0057
1.121–1	1545–0072
1.121–2	1545–0072
1.121–3	1545–0072
1.121–4	1545–0072
	1545–0091
1.121–5	1545–0072
1.127–2	1545–0768
1.132–1T	1545–0771
1.132–2	1545–0771
1.132–2T	1545–0771
1.132–5	1545–0771
1.132–5T	1545–0771
	1545–1098
1.141–1	1545–1451
1.141–12	1545–1451
1.142–2	1545–1451
1.148–0	1545–1098
1.148–1	1545–1098
1.148–2	1545–1098
	1545–1347
1.148–3	1545–1098
	1545–1347
1.148–4	1545–1098
	1545–1347
1.148–5	1545–1098
1.148–6	1545–1098
	1545–1451
1.148–7	1545–1098
1.148–7	1545–1347
1.148–8	1545–1098
1.148–11	1545–1098
1.148–11	1545–1347
1.149(e)–1	1545–0720
1.150–1	1545–1347
1.151–1	1545–0074
1.152–3	1545–0071
1.152–4	1545–0074
1.152–4T	1545–0074
1.162–1	1545–0139
1.162–2	1545–0139
1.162–3	1545–0139
1.162–4	1545–0139
1.162–5	1545–0139
1.162–6	1545–0139
1.162–7	1545–0139
1.162–8	1545–0139
1.162–9	1545–0139
1.162–10	1545–0139
1.162–11	1545–0139
1.162–12	1545–0139
1.162–13	1545–0139
1.162–14	1545–0139
1.162–15	1545–0139
1.162–16	1545–0139
1.162–17	1545–0139
1.162–18	1545–0139
1.162–19	1545–0139
1.162–20	1545–0139
1.162–27	1545–1466
1.163–5	1545–0786
	1545–1132
1.163–8T	1545–0995
1.163–10T	1545–0074
1.163–13	1545–1491
1.163(d)–1	1545–1421
1.165–1	1545–0177
1.165–2	1545–0177
1.165–3	1545–0177
1.165–4	1545–0177
1.165–5	1545–0177
1.165–6	1545–0177
1.165–7	1545–0177
1.165–8	1545–0177
1.165–9	1545–0177
1.165–10	1545–0177
1.165–11	1545–0074
	1545–0177
	1545–0786
1.165–12	1545–0786
1.166–1	1545–0123
1.166–2	1545–1254
1.166–4	1545–0123
1.166–10	1545–0123

CFR part or section where identified and described	Current OMB control No.
1.167(a)–5T	1545–1021
1.167(a)–7	1545–0172
1.167(a)–11	1545–0152
	1545–0172
1.167(a)–12	1545–0172
1.167(d)–1	1545–0172
1.167(e)–1	1545–0172
1.167(f)–11	1545–0172
1.167(l)–1	1545–0172
1.168(d)–1	1545–1146
1.168(f)(8)–1T	1545–0923
1.168(i)–1	1545–1331
1.168–5	1545–0172
1.169–4	1545–0172
1.170–1	1545–0074
1.170–2	1545–0074
1.170–3	1545–0123
1.170A–1	1545–0074
1.170A–2	1545–0074
1.170A–4(A)(b)	1545–0123
1.170A–8	1545–0074
1.170A–9	1545–0052
	1545–0074
1.170A–11	1545–0123
	1545–0074
1.170A–12	1545–0020
	1545–0074
1.170A–13	1545–0074
	1545–0754
	1545–0908
	1545–1431
1.170A–13(f)	1545–1464
1.170A–14	1545–0763
1.171–4	1545–1491
1.171–5	1545–1491
1.172–1	1545–0172
1.172–13	1545–0863
1.173–1	1545–0172
1.174–3	1545–0152
1.174–4	1545–0152
1.175–3	1545–0187
1.175–6	1545–0152
1.177–1	1545–0172
1.179–2	1545–1201
1.179–3	1545–1201
1.179–5	1545–0172
1.180–2	1545–0074
1.182–6	1545–0074
1.183–1	1545–0195
1.183–2	1545–0195
1.183–3	1545–0195
1.183–4	1545–0195
1.190–3	1545–0074
1.194–2	1545–0735
1.194–4	1545–0735
1.197–1T	1545–1425
1.213–1	1545–0074
1.215–1T	1545–0074
1.217–2	1545–0182
1.243–3	1545–0123
1.243–4	1545–0123
1.243–5	1545–0123
1.248–1	1545–0172
1.261–1	1545–1041
1.263(e)–1	1545–0123
1.263A–1	1545–0987
1.263A–1T	1545–0187
1.263A–2	1545–0987
1.263A–3	1545–0987
	1545–0987
1.263A–8(b)(2)(iii)	1545–1265
1.263A–9(d)(1)	1545–1265
1.263A–9(f)(1)(ii)	1545–1265
1.263A–9(f)(2)(iv)	1545–1265
1.263A–9(g)(2)(iv)(C)	1545–1265
1.263A–9(g)(3)(iv)	1545–1265
1.265–1	1545–0074
1.265–2	1545–0123
1.266–1	1545–0123
1.267(f)–1	1545–0885
1.268–1	1545–0184
1.274–1	1545–0139
1.274–2	1545–0139
1.274–3	1545–0139
1.274–4	1545–0139
1.274–5A	1545–0139
	1545–0771
1.274–5T	1545–0074
	1545–0172
	1545–0771
1.274–6	1545–0139
	1545–0771
1.274–6T	1545–0074
	1545–0771
1.274–7	1545–0139
1.274–8	1545–0139
1.279–6	1545–0123
1.280C–4	1545–1155
1.280F–3T	1545–0074
1.281–4	1545–0123
1.302–4	1545–0074
1.305–3	1545–0123
1.305–5	1545–1438
1.307–2	1545–0074
1.312–15	1545–0172
1.316–1	1545–0123
1.331–1	1545–0074
1.332–4	1545–0123
1.332–6	1545–0123
1.337(d)–1	1545–1160
1.337(d)–2	1545–1160
1.338–1	1545–1295
1.338(b)–1	1545–1295
1.338(h)(10)–1	1545–1295
1.341–7	1545–0123
1.351–3	1545–0074
1.355–5	1545–0123
1.362–2	1545–0123
1.367(a)–1T	1545–0026
1.367(a)–2T	1545–0026
1.367(a)–3	1545–0026
	1545–1478
1.367(a)–3T	1545–0026
1.367(a)–6T	1545–0026
1.367(d)–1T	1545–0026
1.367(e)–1T	1545–1487
1.367(e)–2T	1545–1124
1.368–3	1545–0123
1.371–1	1545–0123
1.371–2	1545–0123
1.374–3	1545–0123
1.381(b)–1	1545–0123
1.381(c)(4)–1	1545–0123
	1545–0152
	1545–0879
1.381(c)(5)–1	1545–0123
	1545–0152
1.381(c)(6)–1	1545–0123
	1545–0152
1.381(c)(8)–1	1545–0123
1.381(c)(10)–1	1545–0123
1.381(c)(11)–1(k)	1545–0123
1.381(c)(13)–1	1545–0123
1.381(c)(17)–1	1545–0045

CFR part or section where identified and described	Current OMB control No.
1.381(c)(25)–1	1545–0045
1.382–1T	1545–0123
1.382–2	1545–0123
1.382–2T	1545–0123
1.382–3	1545–1281
	1545–1345
1.382–4	1545–1120
1.382–6	1545–1381
1.382–8T	1545–1434
1.382–9	1545–1260
	1545–1120
	1545–1275
	1545–1324
1.382–91	1545–1260
	1545–1324
1.383–1	1545–0074
	1545–1120
1.401(a)–11	1545–0710
1.401(a)–20	1545–0928
1.401(a)–31	1545–1341
1.401(a)–50	1545–0710
1.401(a)(31)–1	1545–1341
1.401(b)–1	1545–0197
1.401(f)–1	1545–0710
1.401(k)–1	1545–1039
	1545–1069
1.401–1	1545–0020
	1545–0197
	1545–0200
	1545–0534
	1545–0710
1.401–12(n)	1545–0806
1.401–14	1545–0710
1.402(c)–2	1545–1341
1.402(f)–1	1545–1341
1.403(b)–1	1545–0710
1.403(b)–2	1545–1341
1.404(a)–4	1545–0710
1.404(a)–12	1545–0710
1.404A–2	1545–0123
1.404A–6	1545–0123
1.408–2	1545–0390
1.408–5	1545–0747
1.408–6	1545–0203
	1545–0390
1.408–7	1545–0119
1.410(a)–2	1545–0710
1.410(d)–1	1545–0710
1.411(a)–11T	1545–1471
1.411(d)–6T	1545–1477
1.412(b)–5	1545–0710
1.412(c)(1)–2	1545–0710
1.412(c)(2)–1	1545–0710
1.412(c)(3)–2	1545–0710
1.414(c)–5	1545–0797
1.414(r)–1	1545–1221
1.415–2	1545–0710
1.415–6	1545–0710
1.417(e)–1T	1545–1471
1.441–3T	1545–0134
1.442–1	1545–0074
	1545–0123
	1545–0134
	1545–0152
1.442–2T	1545–0134
1.442–3T	1545–0134
1.443–1	1545–0123
1.444–3T	1545–1036
1.446–1	1545–0074
	1545–0152
1.446–4(d)	1545–1412
1.448–1(g)	1545–0152
1.448–1(h)	1545–0152
1.448–1(i)	1545–0152
1.448–2T	1545–0152
1.451–1	1545–0091
1.451–3	1545–0152
	1545–0736
1.451–4	1545–0123
1.451–5	1545–0074
1.451–6	1545–0074
1.451–7	1545–0074
1.453–1	1545–0152
1.453–2	1545–0152
1.453–8	1545–0152
	1545–0228
1.453–10	1545–0152
1.453A–1	1545–0152
	1545–1134
1.453A–2	1545–0152
	1545–1134
1.453A–3	1545–0963
1.454–1	1545–0074
1.455–2	1545–0152
1.455–6	1545–0123
1.456–2	1545–0123
1.456–6	1545–0123
1.456–7	1545–0123
1.458–1	1545–0879
1.458–2	1545–0152
1.460–6	1545–1031
1.460–6T	1545–1572
1.461–1	1545–0074
1.461–2	1545–0096
1.461–4	1545–0917
1.461–5	1545–0917
1.463–1T	1545–0916
1.465–1T	1545–0712
1.466–1T	1545–0152
1.466–4	1545–0152
1.468A–3	1545–1269
	1545–1378
	1545–1511
1.468A–4	1545–0954
1.468A–7	1545–0954
1.468A–8	1545–1269
1.468B–1(j)	1545–1299
1.468B–2(k)	1545–1299
1.468B–2(l)	1545–1299
1.468B–3(b)	1545–1299
1.468B–3(e)	1545–1299
1.468B–5(b)	1545–1299
1.469–1	1545–1008
1.469–2T	1545–0712
	1545–1091
1.469–4T	1545–0985
	1545–1037
1.471–2	1545–0123
1.471–5	1545–0123
1.471–6	1545–0123
1.471–8	1545–0123
1.471–11	1545–0123
	1545–0152
1.472–1	1545–0042
	1545–0152
1.472–2	1545–0152
1.472–3	1545–0042
1.472–5	1545–0152
1.472–8	1545–0028
	1545–0042
1.475(b)–4	1545–1496
1.481–4	1545–0152
1.481–5	1545–0152
1.482–1	1545–1364

CFR part or section where identified and described	Current OMB control No.
1.482–4	1545–1364
1.482–7	1545–1364
1.501(a)–1	1545–0056
	1545–0057
1.501(c)(3)–1	1545–0056
1.501(c)(9)–5	1545–0047
1.501(c)(17)–3	1545–0047
1.501(e)–1	1545–0814
1.503(c)–1	1545–0047
	1545–0052
1.505(c)–1T	1545–0916
1.507–1	1545–0052
1.507–2	1545–0052
1.508–1	1545–0052
	1545–0056
1.509(a)–3	1545–0047
1.509(a)–5	1545–0047
1.509(c)–1	1545–0052
1.512(a)–1	1545–0687
1.512(a)–4	1545–0047
	1545–0687
1.521–1	1545–0051
	1545–0058
1.527–2	1545–0129
1.527–5	1545–0129
1.527–6	1545–0129
1.527–9	1545–0129
1.528–8	1545–0127
1.533–2	1545–0123
1.534–2	1545–0123
1.542–3	1545–0123
1.545–2	1545–0123
1.545–3	1545–0123
1.547–2	1545–0045
	1545–0123
1.547–3	1545–0123
1.551–4	1545–0074
1.552–3	1545–0099
1.552–4	1545–0099
1.552–5	1545–0099
1.556–2	1545–0704
1.561–1	1545–0044
1.561–2	1545–0123
1.562–3	1545–0123
1.563–2	1545–0123
1.564–1	1545–0123
1.565–1	1545–0043
	1545–0123
1.565–2	1545–0043
1.565–3	1545–0043
1.565–5	1545–0043
1.565–6	1545–0043
1.585–1	1545–0123
1.585–3	1545–0123
1.585–8	1545–1290
1.586–2	1545–0123
1.593–1	1545–0123
1.593–6	1545–0123
1.593–6A	1545–0123
1.593–7	1545–0123
1.595–1	1545–0123
1.597–2	1545–1300
1.597–4	1545–1300
1.597–6	1545–1300
1.597–7	1545–1300
1.611–2	1545–0099
1.611–3	1545–0007
	1545–0099
1.612–4	1545–0074
1.612–5	1545–0099
1.613–3	1545–0099
1.613–4	1545–0099
1.613–6	1545–0099
1.613–7	1545–0099
1.613A–3	1545–0919
1.613A–3(e)	1545–1251
1.613A–3(l)	1545–0919
1.613A–5	1545–0099
1.613A–6	1545–0099
1.614–2	1545–0099
1.614–3	1545–0099
1.614–5	1545–0099
1.614–6	1545–0099
1.614–8	1545–0099
1.617–1	1545–0099
1.617–3	1545–0099
1.617–4	1545–0099
1.631–1	1545–0007
1.631–2	1545–0007
1.641(b)–2	1545–0092
1.642(c)–1	1545–0092
1.642(c)–2	1545–0092
1.642(c)–5	1545–0074
1.642(c)–6	1545–0020
	1545–0074
	1545–0092
1.642(g)–1	1545–0092
1.642(i)–1	1545–0092
1.663(b)–2	1545–0092
1.664–1	1545–0196
1.664–2	1545–0196
1.664–3	1545–0196
1.664–4	1545–0020
	1545–0196
1.665(a)–0A through	
1.665(g)–2A	1545–0192
1.666(d)–1A	1545–0092
1.671–4	1545–1442
1.701–1	1545–0099
1.702–1	1545–0074
1.703–1	1545–0099
1.704–2	1545–1090
1.706–1	1545–0099
	1545–0074
	1545–0134
1.706–1T	1545–0099
1.707–3(c)(2)	1545–1243
1.707–5(a)(7)(ii)	1545–1243
1.707–6(c)	1545–1243
1.707–8	1545–1243
1.708–1	1545–0099
1.732–1	1545–0099
1.736–1	1545–0074
1.743–1	1545–0074
1.751–1	1545–0074
	1545–0099
	1545–0941
1.752–5	1545–1090
1.754–1	1545–0099
1.755–1	1545–0099
1.755–2T	1545–1021
1.761–2	1545–1338
1.801–1	1545–0123
	1545–0128
1.801–3	1545–0123
1.801–5	1545–0128
1.801–8	1545–0128
1.804–4	1545–0128
1.811–2	1545–0128
1.812–2	1545–0128
1.815–6	1545–0128
1.818–4	1545–0128
1.818–5	1545–0128
1.818–8	1545–0128

CFR part or section where identified and described	Current OMB control No.
1.819–2	1545–0128
1.821–1	1545–1027
1.821–3	1545–1027
1.821–4	1545–1027
1.822–5	1545–1027
1.822–6	1545–1027
1.822–8	1545–1027
1.822–9	1545–1027
1.823–2	1545–1027
1.823–5	1545–1027
1.823–6	1545–1027
1.825–1	1545–1027
1.826–1	1545–1027
1.826–2	1545–1027
1.826–3	1545–1027
1.826–4	1545–1027
1.826–6	1545–1027
1.831–3	1545–0123
1.831–4	1545–0123
1.832–4	1545–1227
1.832–5	1545–0123
1.848–2(g)(8)	1545–1287
1.848–2(h)(3)	1545–1287
1.848–2(i)(4)	1545–1287
1.851–2	1545–1010
1.851–4	1545–0123
1.852–1	1545–0123
1.852–4	1545–0123
	1545–0145
1.852–6	1545–0123
	1545–0144
1.852–7	1545–0074
1.852–9	1545–0074
	1545–0123
	1545–0144
	1545–0145
1.852–11	1545–1094
1.853–3	1545–0123
1.853–4	1545–0123
1.854–2	1545–0123
1.855–1	1545–0123
1.856–2	1545–0123
	1545–1004
1.856–6	1545–0123
1.856–7	1545–0123
1.856–8	1545–0123
1.857–8	1545–0123
1.857–9	1545–0074
1.858–1	1545–0123
1.860–2	1545–0045
1.860–4	1545–0045
	1545–1054
	1545–1057
1.860E–2(a)(5)	1545–1276
1.860E–2(a)(7)	1545–1276
1.860E–2(b)(2)	1545–1276
1.861–2	1545–0089
1.861–3	1545–0089
1.861–8	1545–0126
1.861–8(e)(6) and (g)	1545–1224
1.861–9T	1545–0121
	1545–1072
1.863–1	1545–1476
1.863–3	1545–1467
1.863–3A	1545–0126
1.863–4	1545–0126
1.863–7	1545–0132
1.864–4	1545–0126
1.871–1	1545–0096
1.871–6	1545–0795
1.871–7	1545–0089
1.871–10	1545–0089
	1545–0165
1.874–1	1545–0089
1.881–4	1545–1440
1.882–4	1545–0126
1.884–0	1545–1070
1.884–1	1545–1070
1.884–2	1545–1070
1.884–2T	1545–0126
	1545–1070
1.884–4	1545–1070
1.884–5	1545–1070
1.892–1T	1545–1053
1.892–2T	1545–1053
1.892–3T	1545–1053
1.892–4T	1545–1053
1.892–5T	1545–1053
1.892–6T	1545–1053
1.892–7T	1545–1053
1.897–2	1545–0123
	1545–0902
1.897–3	1545–0123
1.897–5T	1545–0902
1.897–6T	1545–0902
1.901–2	1545–0746
1.901–2A	1545–0746
1.901–3	1545–0122
1.902–1	1545–0122
	1545–1458
1.904–1	1545–0121
	1545–0122
1.904–2	1545–0121
	1545–0122
1.904–3	1545–0121
1.904–4	1545–0121
1.904–5	1545–0121
1.904(f)–1	1545–0121
	1545–0122
1.904(f)–2	1545–0121
1.904(f)–3	1545–0121
1.904(f)–4	1545–0121
1.904(f)–5	1545–0121
1.904(f)–6	1545–0121
1.904(f)–7	1545–1127
1.905–2	1545–0122
1.905–3T	1545–1056
1.905–4T	1545–1056
1.905–5T	1545–1056
1.911–1	1545–0067
	1545–0070
1.911–2	1545–0067
	1545–0070
1.911–3	1545–0067
	1545–0070
1.911–4	1545–0067
	1545–0070
1.911–5	1545–0067
	1545–0070
1.911–6	1545–0067
	1545–0070
1.911–7	1545–0067
	1545–0070
1.913–13	1545–0067
1.921–1T	1545–0190
	1545–0884
	1545–0935
	1545–0939
1.921–2	1545–0884
1.921–3T	1545–0935
1.923–1T	1545–0935
1.924(a)–1T	1545–0935
1.925(a)–1T	1545–0935
1.925(b)–1T	1545–0935

CFR part or section where identified and described	Current OMB control No.
1.926(a)–1T	1545–0935
1.927(a)–1T	1545–0935
1.927(b)–1T	1545–0935
1.927(d)–1	1545–0884
1.927(d)–2T	1545–0935
1.927(e)–1T	1545–0935
1.927(e)–2T	1545–0935
1.927(f)–1	1545–0884
1.931–1	1545–0074
	1545–0123
1.934–1	1545–0782
1.935–1	1545–0074
	1545–0087
	1545–0803
1.936–1	1545–0215
	1545–0217
1.936–4	1545–0215
1.936–5	1545–0704
1.936–6	1545–0215
1.936–7	1545–0215
1.936–10(c)	1545–1138
1.952–2	1545–0126
1.953–2	1545–0126
1.954–1	1545–1068
1.954–2	1545–1068
1.955–2	1545–0123
1.955–3	1545–0123
1.955A–2	1545–0755
1.955A–3	1545–0755
1.956–1	1545–0704
1.956–2	1545–0704
1.959–1	1545–0704
1.959–2	1545–0704
1.960–1	1545–0122
1.962–2	1545–0704
1.962–3	1545–0704
1.962–4	1545–0704
1.964–1	1545–0126
	1545–0704
	1545–1072
1.964–3	1545–0126
1.970–2	1545–0126
1.985–2	1545–1051
	1545–1131
1.985–3	1545–1051
1.988–0	1545–1131
1.988–1	1545–1131
1.988–2	1545–1131
1.988–3	1545–1131
1.988–4	1545–1131
1.988–5	1545–1131
1.992–1	1545–0190
	1545–0938
1.992–2	1545–0190
	1545–0884
	1545–0938
1.992–3	1545–0190
	1545–0938
1.992–4	1545–0190
	1545–0938
1.993–3	1545–0938
1.993–4	1545–0938
1.994–1	1545–0938
1.995–5	1545–0938
1.1012–1	1545–0074
	1545–1139
1.1014–4	1545–0184
1.1015–1	1545–0020
1.1017–2	1545–0028
	1545–0046
1.1031(d)–1T	1545–1021
1.1033(a)–2	1545–0184
1.1033(g)–1	1545–0184
1.1034–1	1545–0072
1.1039–1	1545–0184
1.1041–1T	1545–0074
1.1042–1T	1545–0916
1.1044(a)–1	1545–1421
1.1060–1T	1545–1021
1.1071–1	1545–0184
1.1071–4	1545–0184
1.1081–4	1545–0028
	1545–0046
	1545–0123
1.1081–11	1545–0074
	1545–0123
1.1082–1	1545–0046
1.1082–2	1545–0046
1.1082–3	1545–0046
	1545–0184
1.1082–4	1545–0046
1.1082–5	1545–0046
1.1082–6	1545–0046
1.1083–1	1545–0123
1.1092(b)–1T	1545–0644
1.1092(b)–2T	1545–0644
1.1092(b)–3T	1545–0644
1.1092(b)–4T	1545–0644
1.1092(b)–5T	1545–0644
1.1211–1	1545–0074
1.1212–1	1545–0074
1.1221–2	1545–1403
1.1221–2(d)(2)(iv)	1545–1480
1.1221–2(e)(5)	1545–1480
1.1221–2(g)(5)(ii)	1545–1480
1.1221–2(g)(6)(ii)	1545–1480
1.1221–2(g)(6)(iii)	1545–1480
1.1221–2T(c)	1545–1403
1.1231–1	1545–0177
	1545–0184
1.1231–2	1545–0177
	1545–0184
1.1231–2	1545–0074
1.1232–3	1545–0074
1.1237–1	1545–0184
1.1239–1	1545–0091
1.1242–1	1545–0184
1.1243–1	1545–0123
1.1244(e)–1	1545–0123
	1545–1447
1.1245–1	1545–0184
1.1245–2	1545–0184
1.1245–3	1545–0184
1.1245–4	1545–0184
1.1245–5	1545–0184
1.1245–6	1545–0184
1.1247–1	1545–0122
1.1247–2	1545–0122
1.1247–4	1545–0122
1.1247–5	1545–0122
1.1248–7	1545–0074
1.1250–1	1545–0184
1.1250–2	1545–0184
1.1250–3	1545–0184
1.1250–4	1545–0184
1.1250–5	1545–0184
1.1251–1	1545–0184
1.1251–2	1545–0074
	1545–0184
1.1251–3	1545–0184
1.1251–4	1545–0184
1.1252–1	1545–0184
1.1252–2	1545–0184
1.1254–1(c)(3)	1545–1352

CFR part or section where identified and described	Current OMB control No.
1.1254–4	1545–1493
1.1254–5(d)(2)	1545–1352
1.1258–1	1545–1452
1.1272–3	1545–1353
1.1273–2(h)(2)	1545–1353
1.1274–3(d)	1545–1353
1.1274–5(b)	1545–1353
1.1274A–1(c)	1545–1353
1.1275–2	1545–1450
1.1275–3	1545–0887
	1545–1353
	1545–1450
1.1275–4	1545–1450
1.1275–6	1545–1450
1.1287–1	1545–0786
1.1291–9	1545–1507
1.1291–10	1545–1507
	1545–1304
1.1294–1T	1545–1002
	1545–1028
1.1295–1T	1545–1028
	1545–1555
1.1295–3T	1545–1555
1.1297–3T	1545–1028
1.1311(a)–1	1545–0074
1.1361–1	1545–0731
1.1362–1	1545–1308
1.1362–2	1545–1308
1.1362–3	1545–1308
1.1362–4	1545–1308
1.1362–5	1545–1308
1.1362–6	1545–1308
1.1362–7	1545–1308
1.1367–1(f)	1545–1139
1.1368–1(f)(2)	1545–1139
1.1368–1(f)(3)	1545–1139
1.1368–1(f)(4)	1545–1139
1.1368–1(g)(2)	1545–1139
1.1374–1A	1545–0130
1.1377–1	1545–1462
1.1383–1	1545–0074
1.1385–1	1545–0074
	1545–0098
1.1388–1	1545–0118
	1545–0123
1.1398–1	1545–1375
1.1398–2	1545–1375
1.1402(a)–2	1545–0074
1.1402(a)–5	1545–0074
1.1402(a)–11	1545–0074
1.1402(a)–15	1545–0074
1.1402(a)–16	1545–0074
1.1402(b)–1	1545–0171
1.1402(c)–2	1545–0074
1.1402(e)(1)–1	1545–0074
1.1402(e)(2)–1	1545–0074
1.1402(e)–1A	1545–0168
1.1402(e)–2A	1545–0168
1.1402(e)–3A	1545–0168
1.1402(e)–4A	1545–0168
1.1402(e)–5A	1545–0168
1.1402(f)–1	1545–0074
1.1402(h)–1	1545–0064
1.1441–1	1545–1484
1.1441–2	1545–0795
1.1441–3	1545–0165
	1545–0795
1.1441–4	1545–1484
1.1441–5	1545–0096
	1545–0795
1.1441–6	1545–0055
	1545–0795
1.1441–7	1545–0795
1.1441–8	1545–1053
	1545–1484
1.1441–8T	1545–1053
1.1441–9	1545–1484
1.1443–1	1545–0096
1.1445–1	1545–0902
1.1445–2	1545–0902
	1545–1060
1.1445–3	1545–0902
	1545–1060
1.1445–4	1545–0902
1.1445–5	1545–0902
1.1445–6	1545–0902
	1545–1060
1.1445–7	1545–0902
1.1445–8	1545–0096
1.1445–9T	1545–0902
1.1445–10T	1545–0902
1.1451–1	1545–0054
1.1451–2	1545–0054
1.1461–1	1545–0054
	1545–0055
	1545–0795
1.1461–2	1545–0054
	1545–0055
	1545–0096
	1545–0795
1.1461–3	1545–0054
	1545–0055
	1545–0096
	1545–0795
1.1461–4	1545–0054
	1545–0055
	1545–0096
1.1462–1	1545–0795
1.1492–1	1545–0026
1.1494–1	1545–0026
1.1502–5	1545–0257
1.1502–9	1545–0121
1.1502–13	1545–0123
	1545–0885
	1545–1161
	1545–1433
1.1502–16	1545–0123
1.1502–18	1545–0123
1.1502–19	1545–0123
1.1502–20	1545–1160
1.1502–21T	1545–1237
1.1502–31	1545–1344
1.1502–32	1545–1344
1.1502–33	1545–1344
1.1502–47	1545–0123
1.1502–75	1545–0025
	1545–0123
	1545–0133
	1545–0152
1.1502–76	1545–1344
1.1502–77	1545–0123
1.1502–77T	1545–1046
1.1502–78	1545–0582
1.1502–95T	1545–1218
1.1503–2A	1545–1083
1.1552–1	1545–0123
1.1561–3	1545–0123
1.1563–1	1545–0123
	1545–0797
1.1563–3	1545–0123
1.6001–1	1545–0058
	1545–0074
	1545–0099
	1545–0123

CFR part or section where identified and described	Current OMB control No.
	1545–0865
1.6011–1	1545–0055
	1545–0074
	1545–0085
	1545–0089
	1545–0090
	1545–0091
	1545–0096
	1545–0121
	1545–0458
	1545–0666
	1545–0675
	1545–0908
1.6011–2	1545–0055
	1545–0938
1.6011–3	1545–0238
	1545–0239
1.6012–1	1545–0067
	1545–0085
	1545–0089
	1545–0675
	1545–0074
1.6012–2	1545–0047
	1545–0051
	1545–0067
	1545–0123
	1545–0126
	1545–0130
	1545–0128
	1545–0175
	1545–0687
	1545–0890
	1545–1023
	1545–1027
1.6012–3	1545–0047
	1545–0067
	1545–0092
	1545–0196
	1545–0687
1.6012–4	1545–0067
1.6012–5	1545–0067
	1545–0967
	1545–0970
	1545–0991
	1545–0936
	1545–1023
	1545–1033
	1545–1079
1.6012–6	1545–0067
1.6012–7T	1545–1348
	1545–0089
	1545–0129
1.6013–1	1545–0074
1.6013–2	1545–0091
1.6013–6	1545–0074
1.6013–7	1545–0074
1.6015(a)–1	1545–0087
1.6015(b)–1	1545–0087
1.6015(d)–1	1545–0087
1.6015(e)–1	1545–0087
1.6015(f)–1	1545–0087
1.6015(g)–1	1545–0087
1.6015(h)–1	1545–0087
1.6015(i)–1	1545–0087
1.6017–1	1545–0074
	1545–0087
	1545–0090
1.6031(b)–1T	1545–0099
1.6031(c)–1T	1545–0099
1.6031–1	1545–0099
	1545–0970
1.6032–1	1545–0099

CFR part or section where identified and described	Current OMB control No.
1.6033–2	1545–0047
	1545–0049
	1545–0052
	1545–0092
	1545–0687
	1545–1150
1.6033–3	1545–0052
1.6034–1	1545–0092
	1545–0094
1.6035–1	1545–0704
1.6035–2	1545–0704
1.6035–3	1545–0704
1.6037–1	1545–0130
	1545–1023
1.6038–2	1545–0704
	1545–0805
	1545–1317
1.6038A–2	1545–1191
1.6038A–3	1545–1191
	1545–1440
1.6038B–1T	1545–0026
1.6039–2	1545–0820
1.6041–1	1545–0008
	1545–0108
	1545–0112
	1545–0115
	1545–0120
	1545–0295
	1545–0350
	1545–0367
	1545–0387
	1545–0441
	1545–0957
1.6041–2	1545–0008
	1545–0119
	1545–0350
	1545–0441
1.6041–3	1545–1148
1.6041–4	1545–0115
	1545–0295
	1545–0367
	1545–0387
	1545–0957
1.6041–5	1545–0295
	1545–0367
	1545–0387
	1545–0957
1.6041–6	1545–0008
	1545–0115
1.6041–7	1545–0112
	1545–0295
	1545–0350
	1545–0367
	1545–0387
	1545–0441
	1545–0957
1.6042–1	1545–0110
1.6042–2	1545–0110
	1545–0295
	1545–0367
	1545–0387
	1545–0957
1.6042–3	1545–0295
	1545–0367
	1545–0387
	1545–0957
1.6042–4	1545–0110
1.6043–1	1545–0041
1.6043–2	1545–0041
	1545–0110
	1545–0295
	1545–0387

CFR part or section where identified and described	Current OMB control No.
1.6043–3	1545–0047
1.6044–1	1545–0118
1.6044–2	1545–0118
1.6044–3	1545–0118
1.6044–4	1545–0118
1.6044–5	1545–0118
1.6045–1	1545–0715
1.6045–2	1545–0115
1.6045–4	1545–1085
1.6046–1	1545–0704
	1545–0794
	1545–1317
1.6046–2	1545–0704
1.6046–3	1545–0704
1.6047–1	1545–0119
	1545–0295
	1545–0387
1.6049–1	1545–0112
	1545–0117
	1545–0295
	1545–0367
	1545–0387
	1545–0597
	1545–0957
1.6049–2	1545–0117
1.6049–3	1545–0117
1.6049–4	1545–0096
	1545–0112
	1545–0117
	1545–1018
	1545–1050
1.6049–5	1545–0096
	1545–0112
	1545–0117
1.6049–6	1545–0096
1.6049–7	1545–1018
1.6049–7T	1545–0112
	1545–0117
	1545–0118
1.6050A–1	1545–0115
1.6050B–1	1545–0120
1.6050D–1	1545–0120
	1545–0232
1.6050E–1	1545–0120
1.6050H–1	1545–0901
	1545–1380
1.6050H–2	1545–0901
	1545–1339
	1545–1380
1.6050H–1T	1545–0901
1.6050I–2	1545–1449
1.6050J–1T	1545–0877
1.6050K–1	1545–0941
1.6050P–1	1545–1419
1.6050P–1T	1545–1419
1.6052–1	1545–0008
1.6052–2	1545–0008
1.6060–1	1545–0074
1.6061–1	1545–0123
1.6061–2T	1545–1348
1.6062–1	1545–0123
1.6063–1	1545–0123
1.6065–1	1545–0123
1.6071–1	1545–0123
	1545–0810
1.6072–1	1545–0074
1.6072–2	1545–0123
	1545–0807
1.6073–1	1545–0087
1.6073–2	1545–0087
1.6073–3	1545–0087
1.6073–4	1545–0087

CFR part or section where identified and described	Current OMB control No.
1.6074–1	1545–0123
1.6074–2	1545–0123
1.6081–1	1545–0066
	1545–0148
	1545–0233
	1545–1057
	1545–1081
1.6081–2	1545–0148
	1545–1054
	1545–1036
1.6081–3	1545–0233
1.6081–4	1545–0188
	1545–1479
1.6081–6	1545–0148
	1545–1054
1.6081–7	1545–0148
	1545–1054
1.6091–3	1545–0089
1.6107–1	1545–0074
1.6109–1	1545–0074
1.6109–2	1545–0074
1.6115–1	1545–1464
1.6151–1	1545–0074
1.6152–1	1545–0135
	1545–0233
1.6153–1	1545–0087
1.6153–4	1545–0087
1.6154–2	1545–0257
1.6154–3	1545–0135
1.6154–5	1545–0976
1.6161–1	1545–0087
1.6162–1	1545–0087
1.6164–1	1545–0135
1.6164–2	1545–0135
1.6164–3	1545–0135
1.6164–5	1545–0135
1.6164–6	1545–0135
1.6164–7	1545–0135
1.6164–8	1545–0135
1.6164–9	1545–0135
1.6302–1	1545–0257
1.6302–2	1545–0098
	1545–0257
1.6411–1	1545–0098
	1545–0135
	1545–0582
1.6411–2	1545–0098
	1545–0582
1.6411–3	1545–0098
	1545–0582
1.6411–4	1545–0582
1.6414–1	1545–0096
1.6425–1	1545–0170
1.6425–2	1545–0170
1.6425–3	1545–0170
1.6654–1	1545–0087
	1545–0140
1.6654–2	1545–0087
1.6654–3	1545–0087
1.6654–4	1545–0087
1.6655–1	1545–0142
1.6655–2	1545–0142
1.6655–3	1545–0142
1.6655–7	1545–0123
1.6655(e)–1	1545–1421
1.6661–3	1545–0988
	1545–1031
1.6661–4	1545–0739
1.6662–3(c)	1545–0889
1.6662–4(e) and (f)	1545–0889
1.6662–6	1545–1426
1.6694–1	1545–0074

CFR part or section where identified and described	Current OMB control No.
1.6694–2	1545–0074
1.6694–2(c)	1545–1231
1.6694–3(e)	1545–1231
1.6695–1	1545–0074
	1545–1385
1.6696–1	1545–0074
	1545–0240
1.6851–1	1545–0086
	1545–0138
1.6851–2	1545–0086
	1545–0138
1.7476–1	1545–0197
1.7476–2	1545–0197
1.7519–2T	1545–1036
1.7520–1	1545–1343
1.7520–2	1545–1343
1.7520–3	1545–1343
1.7520–4	1545–1343
1.9100–1	1545–0074
1.9101–1	1545–0008
2.1–4	1545–0123
2.1–5	1545–0123
2.1–6	1545–0123
2.1–10	1545–0123
2.1–11	1545–0123
2.1–12	1545–0123
2.1–13	1545–0123
2.1–20	1545–0123
2.1–22	1545–0123
2.1–26	1545–0123
3.2	1545–0123
4.954–1	1545–1068
4.954–2	1545–1068
5.6411–1	1545–0098
	1545–0582
	1545–0042
	1545–0074
	1545–0129
	1545–0172
	1545–0619
5c.44F–1	1545–0619
5c.128–1	1545–0123
5c.168(f)(8)–1	1545–0123
5c.168(f)(8)–2	1545–0123
5c.168(f)(8)–6	1545–0123
5c.168(f)(8)–8	1545–0123
5c.305–1	1545–0110
5c.442–1	1545–0152
5f.103–1	1545–0720
5f.103–3	1545–0720
5f.6045–1	1545–0715
6a.103A–2	1545–0123
	1545–0720
6a.103A–3	1545–0720
7.367(b)–1	1545–0026
7.367(b)–3	1545–0026
7.367(b)–7	1545–0026
7.367(b)–9	1545–0026
7.367(b)–10	1545–0026
7.465–1	1545–0712
7.465–2	1545–0712
7.465–3	1545–0712
7.465–4	1545–0712
7.465–5	1545–0712
7.936–1	1545–0217
7.999–1	1545–0216
7.6039A–1	1545–0015
7.6041–1	1545–0115
11.410–1	1545–0710
11.412(c)–7	1545–0710
11.412(c)–11	1545–0710
12.7	1545–0190
12.8	1545–0191
12.9	1545–0195
14a.422A–1	1545–0123
15A.453–1	1545–0228
16.3–1	1545–0159
16A.126–2	1545–0074
16A.1255–1	1545–0184
16A.1255–2	1545–0184
18.1371–1	1545–0130
18.1378–1	1545–0130
18.1379–1	1545–0130
18.1379–2	1545–0130
20.2011–1	1545–0015
20.2014–5	1545–0015
	1545–0260
20.2014–6	1545–0015
20.2016–1	1545–0015
20.2031–2	1545–0015
20.2031–3	1545–0015
20.2031–4	1545–0015
20.2031–6	1545–0015
20.2031–7	1545–0020
20.2031–10	1545–0015
20.2032–1	1545–0015
20.2032A–3	1545–0015
20.2032A–4	1545–0015
20.2032A–8	1545–0015
20.2039–4	1545–0015
20.2051–1	1545–0015
20.2053–3	1545–0015
20.2053–9	1545–0015
20.2053–10	1545–0015
20.2055–1	1545–0015
20.2055–2	1545–0015
	1545–0092
20.2055–3	1545–0015
20.2056(b)–4	1545–0015
20.2056(b)–7	1545–0015
20.2056A–2	1545–1443
20.2056A–3	1545–1360
20.2056A–4	1545–1360
20.2056A–10	1545–1360
20.2106–1	1545–0015
20.2106–2	1545–0015
20.2204–1	1545–0015
20.2204–2	1545–0015
20.6001–1	1545–0015
20.6011–1	1545–0015
20.6018–1	1545–0015
	1545–0531
20.6018–2	1545–0015
20.6018–3	1545–0015
20.6018–4	1545–0015
	1545–0022
20.6036–2	1545–0015
20.6061–1	1545–0015
20.6065–1	1545–0015
20.6075–1	1545–0015
20.6081–1	1545–0015
	1545–0181
20.6091–1	1545–0015
20.6161–1	1545–0015
	1545–0181
20.6161–2	1545–0015
	1545–0181
20.6163–1	1545–0015
20.6166–1	1545–0181
20.6166A–1	1545–0015
20.6166A–3	1545–0015
20.6324A–1	1545–0754
20.7520–1	1545–1343
20.7520–2	1545–1343

CFR part or section where identified and described	Current OMB control No.
20.7520–3	1545–1343
20.7520–4	1545–1343
22.0	1545–0015
25.2511–2	1545–0020
25.2512–2	1545–0020
25.2512–3	1545–0020
25.2512–5	1545–0020
25.2512–9	1545–0020
25.2513–1	1545–0020
25.2513–2	1545–0020
	1545–0021
25.2513–3	1545–0020
25.2518–2	1545–0959
25.2522(a)–1	1545–0196
25.2522(c)–3	1545–0020
	1545–0196
25.2523(a)–1	1545–0020
	1545–0196
25.2523(f)–1	1545–0015
25.2701–2	1545–1241
25.2701–4	1545–1241
25.2701–5	1545–1273
25.2702–5	1545–1485
25.2702–6	1545–1273
25.6001–1	1545–0020
	1545–0022
25.6011–1	1545–0020
25.6019–1	1545–0020
25.6019–2	1545–0020
25.6019–3	1545–0020
25.6019–4	1545–0020
25.6061–1	1545–0020
25.6065–1	1545–0020
25.6075–1	1545–0020
25.6081–1	1545–0020
25.6091–1	1545–0020
25.6091–2	1545–0020
25.6151–1	1545–0020
25.6161–1	1545–0020
25.7520–1	1545–1343
25.7520–2	1545–1343
25.7520–3	1545–1343
25.7520–4	1545–1343
26.2601–1	1545–0985
26.2632–1	1545–0985
26.2642–1	1545–0985
26.2642–2	1545–0985
26.2642–3	1545–0985
26.2642–4	1545–0985
26.2652–2	1545–0985
26.2662–1	1545–0015
	1545–0985
26.2662–2	1545–0985
31.3102–3	1545–0029
	1545–0059
	1545–0065
31.3121(b)(19)–1	1545–0029
31.3121(d)–1	1545–0004
31.3121(i)–1	1545–0034
31.3121(k)–4	1545–0137
31.3121(r)–1	1545–0029
31.3121(s)–1	1545–0029
31.3302(a)–2	1545–0028
31.3302(a)–3	1545–0028
31.3302(b)–2	1545–0028
31.3302(e)–1	1545–0028
31.3306(c)(18)–1	1545–0029
31.3401(a)–1	1545–0029
31.3401(a)(6)	1545–1484
31.3401(a)(6)–1	1545–0029
	1545–0096
	1545–0795

CFR part or section where identified and described	Current OMB control No.
31.3401(a)(7)–1	1545–0029
31.3401(a)(8)(A)–1	1545–0029
	1545–0666
31.3401(a)(8)(C)–1	1545–0029
31.3401(a)(15)–1	1545–0182
31.3401(c)–1	1545–0004
31.3402(b)–1	1545–0010
31.3402(c)–1	1545–0010
31.3402(f)(1)–1	1545–0010
31.3402(f)(2)–1	1545–0010
	1545–0410
31.3402(f)(3)–1	1545–0010
31.3402(f)(4)–1	1545–0010
31.3402(f)(4)–2	1545–0010
31.3402(f)(5)–1	1545–0010
	1545–1435
31.3402(h)(1)–1	1545–0029
31.3402(h)(3)–1	1545–0010
31.3402(h)(3)–1	1545–0029
31.3402(h)(4)–1	1545–0010
31.3402(i)–(1)	1545–0010
31.3402(i)–(2)	1545–0010
31.3402(k)–1	1545–0065
31.3402(l)–(1)	1545–0010
31.3402(m)–(1)	1545–0010
31.3402(n)–(1)	1545–0010
31.3402(o)–2	1545–0415
31.3402(o)–3	1545–0008
	1545–0010
	1545–0415
	1545–0717
31.3402(p)–1	1545–0415
	1545–0717
31.3402(q)–1	1545–0238
	1545–0239
31.3404–1	1545–0029
31.3405(c)–1	1545–1341
31.3406(a)–1	1545–0112
31.3406(a)–2	1545–0112
31.3406(a)–3	1545–0112
31.3406(a)–4	1545–0112
31.3406(b)(2)–1	1545–0112
31.3406(b)(2)–2	1545–0112
31.3406(b)(2)–3	1545–0112
31.3406(b)(2)–4	1545–0112
31.3406(b)(2)–5	1545–0112
31.3406(b)(3)–1	1545–0112
31.3406(b)(3)–2	1545–0112
31.3406(b)(3)–3	1545–0112
31.3406(b)(3)–4	1545–0112
31.3406(b)(4)–1	1545–0112
31.3406(c)–1	1545–0112
31.3406(d)–1	1545–0112
31.3406(d)–2	1545–0112
31.3406(d)–3	1545–0112
31.3406(d)–4	1545–0112
31.3406(d)–5	1545–0112
31.3406(e)–1	1545–0112
31.3406(f)–1	1545–0112
31.3406(g)–1	1545–0096
	1545–0112
31.3406(g)–2	1545–0112
31.3406(g)–3	1545–0112
31.3406(h)–1	1545–0112
31.3406(h)–2	1545–0112
31.3406(h)–3	1545–0112
31.3406(i)–1	1545–0112
31.3501(a)–1T	1545–0771
31.3503–1	1545–0024
31.3504–1	1545–0029
31.6001–1	1545–0798
31.6001–2	1545–0034

CFR part or section where identified and described	Current OMB control No.
	1545–0798
31.6001–3	1545–0798
31.6001–4	1545–0028
31.6001–5	1545–0798
31.6001–6	1545–0029
	1459–0798
31.6011(a)–1	1545–0029
	1545–0034
	1545–0035
	1545–0059
	1545–0074
	1545–0718
	1545–0256
31.6011(a)–2	1545–0001
	1545–0002
31.6011(a)–3	1545–0028
31.6011(a)–3A	1545–0955
31.6011(a)–4	1545–0034
	1545–0035
	1545–0718
	1545–1413
31.6011(a)–5	1545–0718
	1545–0028
31.6011(a)–6	1545–0028
31.6011(a)–7	1545–0074
31.6011(a)–8	1545–0028
31.6011(a)–9	1545–0028
31.6011(a)–10	1545–0112
31.6011(b)–1	1545–0003
31.6011(b)–2	1545–0029
31.6051–1	1545–0008
	1545–0182
	1545–0458
31.6051–2	1545–0008
31.6051–3	1545–0008
31.6053–1	1545–0029
	1545–0062
	1545–0064
	1545–0065
31.6053–2	1545–0008
31.6053–3	1545–0065
	1545–0714
31.6053–4	1545–0065
31.6065(a)–1	1545–0029
31.6071(a)–1	1545–0001
	1545–0028
	1545–0029
31.6071(a)–1A	1545–0955
31.6081(a)–1	1545–0008
	1545–0028
31.6091–1	1545–0028
	1545–0029
31.6157–1	1545–0955
31.6205–1	1545–0029
31.6301(c)–1AT	1545–0035
	1545–0112
	1545–0257
31.6302–1	1545–1413
31.6302–2	1545–1413
31.6302–3	1545–1413
31.6302–4	1545–1413
31.6302(c)–2	1545–0001
	1545–0257
31.6302(c)–2A	1545–0955
31.6302(c)–3	1545–0257
31.6402(a)–2	1545–0256
31.6413(a)–1	1545–0029
31.6413(a)–2	1545–0029
	1545–0256
31.6413(c)–1	1545–0029
	1545–0171
31.6414–1	1545–0029

CFR part or section where identified and described	Current OMB control No.
32.1	1545–0029
	1545–0415
32.2	1545–0029
35a.3406–2	1545–0112
35a.9999–3	1545–0112
35a.9999–5	1545–0029
36.3121(l)(1)–1	1545–0137
36.3121(l)(1)–2	1545–0137
36.3121(l)(3)–1	1545–0123
36.3121(1)(7)–1	1545–0123
36.3121(1)(10)–1	1545–0029
36.3121(1)(10)–3	1545–0029
36.3121(1)(10)–4	1545–0257
40.6302(c)–3(b)(2)(ii)	1545–1296
40.6302(c)–3(b)(2)(iii)	1545–1296
40.6302(c)–3(e)	1545–1296
40.6302(c)–3(f)(2)(ii)	1545–1296
41.4481–1	1545–0143
41.4481–1T	1545–0143
41.4481–2	1545–0143
41.4482(b)–1T	1545–0143
41.4483–3	1545–0143
41.6001–1	1545–0143
41.6001–2	1545–0143
41.6001–3	1545–0143
41.6071(a)–1	1545–0143
41.6081(a)–1	1545–0143
41.6091–1	1545–0143
41.6109–1	1545–0143
41.6151(a)–1	1545–0143
41.6156–1	1545–0143
41.6161(a)(1)–1	1545–0143
44.4401–1	1545–0235
44.4403–1	1545–0235
44.4412–1	1545–0236
44.4901–1	1545–0236
44.4905–1	1545–0236
44.4905–2	1545–0236
44.6001–1	1545–0235
44.6011(a)–1	1545–0235
	1545–0236
44.6071–1	1545–0235
44.6091–1	1545–0235
44.6151–1	1545–0235
44.6419–1	1545–0235
44.6419–1	1545–0235
44.6419–2	1545–0235
46.4371–4	1545–0023
46.4374–1	1545–0023
46.4701–1	1545–0023
	1545–0257
48.4041–4	1545–0023
48.4041–5	1545–0023
48.4041–6	1545–0023
48.4041–7	1545–0023
48.4041–9	1545–0023
48.4041–10	1545–0023
48.4041–11	1545–0023
48.4041–12	1545–0023
48.4041–13	1545–0023
48.4041–18	1545–0023
48.4041–19	1545–0023
48.4041–20	1545–0023
48.4041–21	1545–1270
48.4042–2	1545–0023
48.4061(a)–1	1545–0023
48.4061(a)–2	1545–0023
48.4061(b)–3	1545–0023
48.4064–1	1545–0014
	1545–0242
48.4071–1	1545–0023
48.4073–1	1545–0023

CFR part or section where identified and described	Current OMB control No.
48.4073–3	1545–0023
	1545–1074
	1545–1087
48.4081–2(c)(3)	1545–1270
48.4081–3(d)(2)(iii)	1545–1270
48.4081–3(e)(2)(ii)	1545–1270
48.4081–3(f)(2)(ii)	1545–1270
48.4081–4(b)(2)(ii)	1545–1270
48.4081–4(b)(3)(i)	1545–1270
48.4081–4(c)	1545–1270
48.4081–6(c)(1)(ii)	1545–1270
48.4081–7	1545–1270
48.4081–9	1545–1270
48.4082–2	1545–1418
48.4101–1	1545–1418
48.4101–2	1545–1418
48.4161(a)–1	1545–0723
48.4161(a)–2	1545–0723
48.4161(a)–3	1545–0723
48.4161(b)–1	1545–0723
	1545–0723
48.4216(a)–2	1545–0023
48.4216(a)–3	1545–0023
48.4216(c)–1	1545–0023
48.4221–1	1545–0023
48.4221–2	1545–0023
48.4221–3	1545–0023
48.4221–4	1545–0023
48.4221–5	1545–0023
48.4221–6	1545–0023
48.4221–7	1545–0023
48.4222(a)–1	1545–0023
	1545–0014
48.4223–1	1545–0023
	1545–0723
	1545–0723
	1545–0723
	1545–0257
48.6302(c)–1	1545–0023
	1545–0257
48.6412–1	1545–0723
48.6416(a)–1	1545–0023
	1545–0723
48.6416(a)–2	1545–0723
48.6416(a)–3	1545–0723
48.6416(b)(2)–3	1545–1087
48.6416(b)(1)–1	1545–0723
48.6416(b)(1)–2	1545–0723
48.6416(b)(1)–3	1545–0723
48.6416(b)(1)–4	1545–0723
48.6416(b)(2)–1	1545–0723
48.6416(b)(2)–2	1545–0723
48.6416(b)(2)–3	1545–0723
	1545–1087
48.6416(b)(2)–4	1545–0723
48.6416(b)(3)–1	1545–0723
48.6416(b)(3)–2	1545–0723
48.6416(b)(3)–3	1545–0723
48.6416(b)(4)–1	1545–0723
48.6416(b)(5)–1	1545–0723
48.6416(c)–1	1545–0723
48.6416(e)–1	1545–0023
	1545–0723
48.6416(f)–1	1545–0023
	1545–0723
48.6416(g)–1	1545–0723
48.6416(h)–1	1545–0723
48.6420(c)–2	1545–0023
48.6420(f)–1	1545–0023
48.6420–1	1545–0162
	1545–0723
48.6420–2	1545–0162
	1545–0723
48.6420–3	1545–0162
	1545–0723
48.6420–4	1545–0162
	1545–0723
48.6420–5	1545–0162
	1545–0723
48.6420–6	1545–0162
	1545–0723
48.6420–7	1545–0162
	1545–0723
48.6421–0	1545–0162
	1545–0723
48.6421–1	1545–0162
	1545–0723
48.6421–2	1545–0162
	1545–0723
48.6421–3	1545–0162
	1545–0723
48.6421–4	1545–0162
	1545–0723
48.6421–5	1545–0162
	1545–0723
48.6421–6	1545–0162
	1545–0723
48.6421–7	1545–0162
	1545–0723
48.6424–0	1545–0723
48.6424–1	1545–0723
48.6424–2	1545–0723
48.6424–3	1545–0723
48.6424–4	1545–0723
48.6424–5	1545–0723
48.6424–6	1545–0723
48.6427–0	1545–0723
48.6427–1	1545–0023
	1545–0162
	1545–0723
48.6427–2	1545–0162
	1545–0723
48.6427–3	1545–0723
48.6427–4	1545–0723
48.6427–5	1545–0723
48.6427–8	1545–1418
48.6427–9	1545–1418
49.4251–1	1545–1075
49.4251–2	1545–1075
49.4253–3	1545–0023
49.4253–4	1545–0023
49.4264(b)–1	1545–0023
	1545–0226
	1545–0226
	1545–0912
	1545–0912
	1545–0257
	1545–0230
	1545–0224
	1545–0225
	1545–0224
	1545–0230
49.4271–1(d)	1545–0685
52.4682–1(b)(2)(iii)	1545–1153
52.4682–2(b)	1545–1153
	1545–1361
52.4682–2(d)	1545–1153
	1545–1361
52.4682–3(c)(2)	1545–1153
52.4682–3(g)	1545–1153
52.4682–4(f)	1545–1153
	1545–0257
52.4682–5(d)	1545–1361
52.4682–5(f)	1545–1361

CFR part or section where identified and described	Current OMB control No.
53.4940–1	1545–0052
	1545–0196
53.4942(a)–1	1545–0052
53.4942(a)–2	1545–0052
53.4942(a)–3	1545–0052
53.4942(b)–3	1545–0052
53.4945–1	1545–0052
53.4945–4	1545–0052
53.4945–5	1545–0052
53.4945–6	1545–0052
53.4947–1	1545–0196
53.4947–2	1545–0196
53.4948–1	1545–0052
53.4961–2	1545–0024
53.4963–1	1545–0024
53.6001–1	1545–0052
53.6011–1	1545–0049
	1545–0052
	1545–0092
	1545–0196
53.6065–1	1545–0052
53.6071–1	1545–0049
53.6081–1	1545–0066
	1545–0148
53.6161–1	1545–0575
54.4972–1	1545–0197
54.4975–7	1545–0575
54.4977–1T	1545–0771
54.4981A–1T	1545–0203
54.6011–1	1545–0575
54.6011–1T	1545–0575
54.9801–3T	1545–1537
54.9801–4T	1545–1537
54.9801–5T	1545–1537
54.9801–6T	1545–1537
55.6001–1	1545–0123
55.6011–1	1545–0999
	1545–0123
	1545–1016
55.6061–1	1545–0999
55.6071–1	1545–0999
56.4911–6	1545–0052
56.4911–7	1545–0052
56.4911–9	1545–0052
56.4911–10	1545–0052
56.6001–1	1545–1049
56.6011–1	1545–1049
56.6081–1	1545–1049
56.6161–1	1545–1049
	1545–0257
145.4051–1	1545–0745
145.4052–1	1545–0120
	1545–0745
	1545–1076
145.4061–1	1545–0745
	1545–0257
	1545–0230
	1545–0224
156.6001–1	1545–1049
156.6011–1	1545–1049
156.6081–1	1545–1049
156.6161–1	1545–1049
301.6011–2	1545–0225
	1545–0350
	1545–0387
	1545–0441
	1545–0957
301.6017–1	1545–0090
301.6034–1	1545–0092
301.6035–1	1545–0123
301.6036–1	1545–0013
	1545–0773

CFR part or section where identified and described	Current OMB control No.
301.6047–1	1545–0367
	1545–0957
301.6057–1	1545–0710
301.6057–2	1545–0710
301.6058–1	1545–0710
301.6059–1	1545–0710
301.6103(c)–1	1545–0280
301.6104(a)–1	1545–0495
301.6104(a)–5	1545–0056
301.6104(a)–6	1545–0056
301.6104(b)–1	1545–0094
	1545–0742
301.6104(d)–1	1545–0092
301.6109–1	1545–0003
	1545–0295
	1545–0367
	1545–0387
	1545–0957
	1545–1461
301.6109–3T	1545–1564
301.6110–3	1545–0074
301.6110–5	1545–0074
301.6111–1T	1545–0865
	1545–0881
301.6112–1T	1545–0865
301.6114–1	1545–1126
	1545–1484
301.6222(a)–2T	1545–0790
301.6222(b)–1T	1545–0790
301.6222(b)–2T	1545–0790
301.6222(b)–3T	1545–0790
301.6227(b)–1T	1545–0790
	1545–0790
301.6231(a)(7)–1	1545–0790
301.6241–1T	1545–0130
301.6316–4	1545–0074
301.6316–5	1545–0074
301.6316–6	1545–0074
301.6316–7	1545–0029
301.6324A–1	1545–0015
301.6361–1	1545–0074
	1545–0024
301.6361–2	1545–0024
301.6361–3	1545–0074
301.6402–2	1545–0024
	1545–0073
	1545–0091
301.6402–3	1545–0055
	1545–0073
	1545–0091
	1545–0132
301.6402–5	1545–0928
301.6404–1	1545–0024
301.6404–2T	1545–0024
301.6404–3	1545–0024
301.6405–1	1545–0024
301.6501(c)–1	1545–1241
301.6501(d)–1	1545–0074
	1545–0430
301.6501(o)–2	1545–0728
301.6511(d)–1	1545–0582
	1545–0024
301.6511(d)–2	1545–0582
	1545–0024
301.6511(d)–3	1545–0024
	1545–0582
301.6652–2	1545–0092
301.6656–1	1545–0794
301.6656–2	1545–0794
301.6685–1	1545–0092
301.6689–1T	1545–1056
301.6707–1T	1545–0865

CFR part or section where identified and described	Current OMB control No.
	1545–0881
301.6708–1T	1545–0865
301.6712–1	1545–1126
301.6723–1A(d)	1545–0909
301.6903–1	1545–0013
301.6905–1	1545–0074
301.7001–1	1545–0123
301.7101–1	1545–1029
301.7207–1	1545–0092
301.7216–2	1545–0074
301.7216–2(o)	1545–1209
301.7425–3	1545–0854
301.7430–2(c)	1545–1356
301.7507–8	1545–0123
301.7507–9	1545–0123
301.7513–1	1545–0429
301.7517–1	1545–0015
301.7605–1	1545–0795
301.7623–1	1545–0409
301.7623–1T	1545–1534
301.7654–1	1545–0803
301.7701–3	1545–1486
301.7701–4	1545–1465
301.7701–16	1545–0795
301.7701(b)–1	1545–0089
301.7701(b)–2	1545–0089
301.7701(b)–3	1545–0089
301.7701(b)–4	1545–0089
301.7701(b)–5	1545–0089
301.7701(b)–6	1545–0089
301.7701(b)–7	1545–0089
	1545–1126
301.7701(b)–9	1545–0089
301.7805–1	1545–0805
301.9001–1	1545–0220
301.9100–1	1545–1488
301.9100–4T	1545–0016
	1545–0042
	1545–0074
	1545–0129
	1545–0172
	1545–0619
301.9100–6T	1545–0872
301.9100–7T	1545–0982
301.9100–8	1545–1112
301.9100–11T	1545–0123
301.9100–12T	1545–0026
	1545–0074
	1545–0172
	1545–1027
301.9100–13T	1545–0046
301.9100–14T	1545–0046
301.9100–15T	1545–0046
301.9100–16T	1545–0152
302.1–7	1545–0024
305.7701–1	1545–0823
305.7871–1	1545–0823
404.6048–1	1545–0160
420.0–1	1545–0710
Part 502	1545–0844
Part 503	1545–0837
Part 509	1545–0846
Part 513	1545–0834
Part 514	1545–0845
Part 516	1545–0841
Part 517	1545–0849
Part 520	1545–0833
Part 521	1545–0848
601.104	1545–0233
601.105	1545–0091
601.201	1545–0019
	1545–0819
601.204	1545–0152
601.401	1545–0257
601.504	1545–0150
601.601	1545–0800
601.602	1545–0295
	1545–0387
	1545–0957
601.702	1545–0429

(26 U.S.C. 7805)

[T.D. 8011, 50 FR 10222, Mar. 14, 1985]

EDITORIAL NOTE: For FEDERAL REGISTER citations affecting §602.101, see the List of CFR Sections Affected in the Findings Aids section of 26 CFR part 600–end.

EFFECTIVE DATE NOTE: By T.D. 8734, 62 FR 53498, Oct. 14, 1997, the table in §602.101 was amended by removing the entries for 1.1441–8T, 1.1461–3, 1.1461–4, 35a.9999–3, part 502, part 503, part 516, part 517, and part 520; adding entries for 1.1441–1, 1.1441–4, 11.1441–8, 1.1441–9, 31.3401(a)(6), and 301.6114–1; and revising the entries for 1.1441–5, 1.1441–6, 1.1461–1, and 301.6402–3, effective Jan. 1, 1999. At 63 FR 2723, Jan. 16, 1998, the entry for ''11.1441–8'' was corrected to read ''1.1441–8'', effective Jan. 1, 1999. For the convenience of the user, the revised text is set forth as follows:

§ 602.101 OMB Control numbers.

* * * * *

CFR part or section where identified and described	Current OMB control No.
* * * * *	
1.1441–5	1545–0096
	1545–0795
	1545–1484
1.1441–6	1545–0055
	1545–0795
	1545–1484
1.1461–1	1545–0054
	1545–0055
	1545–0795
	1545–1484
* * * * *	
301.6402–3	1545–0055
	1545–0073
	1545–0091
	1545–0132
	1545–1484
* * * * *	

List of CFR Sections Affected

All changes to the sections of part 1 (§§ 1.301 to 1.400) of title 26 of the Code of Federal Regulations which were made by documents published in the FEDERAL REGISTER since January 1, 1986, are enumerated in the following list. Entries indicate the nature of the changes effected. Page numbers refer to FEDERAL REGISTER pages. The user should consult the entries for chapters and parts as well as sections for revisions.

For the period before January 1, 1986, see the ''List of CFR Sections Affected, 1949–1963, 1964–1972, and 1973–1985'' published in seven separate volumes.

1986

26 CFR

51 FR Page

Chapter I

1.338–1T (c), (e)(1)(i)(B) and (C), (ii), (2)(ii) and (3), (f)(7)(ii), (h), and (j)(2) amended; (e)(2)(i) revised; (e)(1)(i)(D) added (temporary) 748

(b)(8) and (f)(3)(i) amended; (f)(9) added (temporary) 3587, 10621

(c), (d) heading and (2), (e)(1), (2)(i) and (ii) and (3), (j), (k)(1), (2)(v), (4) heading and (5) revised; (d)(1) introductory text, (i), and (iv), (e)(2)(iv), and (k)(2)(i) amended; (k)(3)(iii) and (6) removed; (d)(1)(v) and (k)(7) redesignated as (d)(1)(vi) and new (k)(6); new (k)(6)(i) and (ii) revised; (b)(9), new (d)(1)(v), and (k)(7) added; (d)(3) and (k)(4) nomenclature changes 5190

(c), (e)(1)(ii) (A) and (B), (2)(ii)(A), (f)(7)(ii), (h) (1), (2), and (4) *Examples* (*1*) and (*2*), (j) (2) and (4), and (k)(1) and (7) (iv) and (v) amended; (m) added (temporary) 17932

(m)(1) introductory text and (7)(iii)(B) corrected.....20274

(m)(15) *Example* (*10*) corrected 20480

26 CFR—Continued

51 FR Page

Chapter I—Continued

(c), (e)(1)(ii)(A) and (2) heading, (ii), and (iii), (h)(2)(ii), and (k)(1) revised; (d)(3), (e)(1)(ii)(B) and (2)(iv), (j)(4)(ii), (k)(2)(i), and (l)(3)(i) amended; (e)(2)(vi) added (temporary) 23739

(d)(3) and (k)(1)(ii)(C) corrected 34469

1.338–2T (j) *Examples* (*1*) and (*2*) amended (temporary) 17936

1.338–3T (b)(2) revised (temporary) 23741

1.338–4T (f)(5) *Answer* (vii)(A), (6)(iv) *Answer* 1 (i)(C)(*1*), and (j)(2) *Answer 5* (i) amended (temporary)..... 749

(h)(1), (2)(i) and (iii), and (3) *Answer 1* (i), *Answer 2* (vi), and (j)(1) and (2) *Answer 6* amended; (h)(2)(vi) and (3) *Answer 2* (vi) *Examples (4)* through (*9*) added (temporary) 3587, 10621

(a)(2) and (3) and (b)(1)(ii) and (2) amended (temporary).....5193

(c)(1) *Answers 2* and *4*, (2) *Question* and *Answer*, (4) *Answer*, and (5) *Answer*, and (f)(1)(ii) *Question 2*, (3) *Answer*, (4) *Question 4*, (5) *Answer*, and (6)(ii) *Answers 1* and *2* and (iv) *Answers 2* and *3* amended; (f)(6)(i)(A) revised (temporary) 5194

26 CFR—Continued

51 FR Page

Chapter I—Continued

(g)(2) *Answer*, (h)(2)(iii), (3) *Answers 1, 2*, and *3*, (j)(1), (2) *Answers 4* and *5*, (k)(1) *Questions 1* and *4* and *Answer 3*, and (l)(1) *Question* amended (temporary) 5194
(f)(6)(ii) *Answer 1* corrected 6219
(f)(6)(iv) *Answer 3* corrected 11017
(a) (3) and (4) table, (f)(6)(iv) *Answer*, and (j)(2) *Answer 5* amended; (l)(5) added (temporary) 17936
(f)(6)(ii) *Answers 1* and *2*, (h)(2)(iii) and (3) *Answers 2* and *3* and (j)(2) *Answer 5* amended (temporary) 23741
(h)(3) *Answer 3 Example* (i) correctly designated 33033
1.338–5T Added (temporary) 5173
(j)(7)(vii) *Examples* (*1*) and (*2*) corrected 6219
(j)(7)(iii) corrected 9005
(c)(2)(iii)(A), (c)(6) *Examples (8) and (17)*, (j)(6)(ii)(A) corrected 11017
(c)(2)(iii)(A), (6) *Examples* (*8*) and (*17*), and (j)(6)(ii)(A) corrected 11017
(a)(2), (c)(2)(v)(C), and (j)(8)(ii) heading and text, and (iii) heading and text amended (temporary) 17936
(c)(2)(v)(C) and (j)(8)(ii) revised (temporary) 23742
1.338(b)–1T Added (temporary) 3589, 10623
1.338(b)–2T Added (temporary) 3591, 10624
(a)(3) added (temporary) 23742
(a)(3) corrected 33033
1.338(b)–3T Added (temporary) 3592, 10626
1.338(b)–4T Added (temporary) 23742
(a)(3) corrected 33033
(c)(1)(vii) corrected 34469
1.338(h)(10)–1T Added (temporary) 743
(f)(4) amended; (f)(5) added (temporary) 3589, 10623
(d)(3) and (d)(4) amended (temporary) 5196
(d)(3), (e)(5), (g) *Example* (*7*), and (j)(2)(iii) corrected 8671
(g) *Example* (*7*) correctly designated and corrected 10381

26 CFR—Continued

51 FR Page

Chapter I—Continued

(e)(8)(i), (g) *Example* (*7*), and (j)(5) *Example* (*1*) corrected 10540
(d)(7) (i) and (ii) amended; (d)(9) added (temporary) 17936
(f)(2)(ii) revised; (g) Examples (2) and (7) amended (temporary) 23744
1.367(a)–1 Removed 17938
1.367(a)–1T Added (temporary) 17938
1.367(a)–2T Added (temporary) 17942
1.367(a)–3T Added (temporary) 17943
1.367(a)–4T Redesignated as 1.367(a)–7T (temporary) 17938
Added (temporary) 17947
1.367(a)–5T Added (temporary) 17949
1.367(a)–6T Added (temporary) 17950
1.367(a)–7T Redesignated from 1.367(a)–4T (temporary) 17938
1.367(d)–1T Added (temporary) 17953
1.368–2 Technical correction 3466
(j)(4) corrected 6400
1.381(c)(4)–1 (a)(1)(ii) amended 2481

1987

26 CFR

52 FR Page

Chapter I

1.382–1T Added (temporary) 29674
1.382–2T Added (temporary) 29675

1988

26 CFR

53 FR Page

Chapter I

1.304–4T Added (temporary) 22171
1.338(b)–3T (g)(1)(ii) and (j) Examples (*6*) and (*7*) amended; (j) Example (*8*) added (temporary) 27043
Comment time extended 32899
1.367(d)1–T Intercompany pricing rules study 43522

1989

26 CFR

54 FR Page

Chapter I

1.355–0 Added 289
1.355–1 Revised 289
1.355–2 Revised 290
(c)(2), Examples 3 and 4, (d)(1), and (5)(iv) corrected 5577
1.355–3 Revised 294

26 CFR—Continued

54 FR Page

Chapter I—Continued
1.355–4 Revised 296
1.355–6 Heading added 296
1.382–1T (a)(2)(iv) added (temporary) 38666
1.382–2T (a)(1), (2)(ii), (f)(18)(ii)(C), and (iii)(C), (22)(ii) and (iii), and (h)(4)(ix) introductory text amended; (a)(2)(iv), (f)(22) (iv), and (v) added; (f)(1) revised 38666
(h)(4)(x)(Z) added (temporary) 52936
1.383–1T Added (temporary) 38668
(f) Examples (1), (2), and (4) and (g) corrected 46187
Example 1 corrected 50043
1.383–2T Heading added (temporary) 38671

1990

26 CFR

55 FR Page

Chapter I
1.337(d)–1 Added 49031
1.337(d)–1T Added (temporary) 9432
Removed 49031
1.337(d)–2T Added (temporary) 49034
1.367(a)–1T (e) redesignated as (g); new (e) and (f) added (temporary) 1408
1.367(e)–0T Added (temporary) 1409
1.367(e)–1T Added (temporary) 1409
1.367(e)–2T Added (temporary) 1412
1.381(b)–1 (a)(1) revised (temporary) 1417

1991

26 CFR

56 FR Page

Chapter I
1.337(d)–1 (a)(3), (5) *Example* 8, (b)(3), (d)(1) and (e)(1) revised; (e)(3) added 47389
1.337(d)–2 Added 47390
1.337(d)–2T Removed 47390
1.338–6T Added 11095
1.382–0 Added 29433
1.382–1 Heading added 29434
1.382–1T Amended 29434
1.382–2 Redesignated as 1.382–4A; new 1.382–2 added; (a)(1) and (2) redesignated from 1.382–2T (f)(1) and (22) 29434

26 CFR—Continued

56 FR Page

Chapter I—Continued
1.382–2T Nomenclature change; (a)(1) introductory text, (i)(B), (iii), (2)(ii), (e)(2)(iv) *Examples* 1, 2, and 3, (f)(1)(i), (ii), (18)(ii)(C), (iii)(C), (22)(iv), (v) and (h)(4)(ix) amended; (f)(1) and (22) redesignated as 1.382–2 (a)(1) and (2); new (f)(1) and (22) added 29434
(a)(2)(iv) redesignated as 1.383–1 (k) 29435
1.382(a)–1 Redesignated as 1.382–1A 29433
Correctly designated 52120
1.382(b)–1 Redesignated as 1.382–2A 29433
Correctly designated 52120
1.382(c)–1 Redesignated as 1.382–3A 29433
1.382–1A—1.382–4A Undesignated center heading added 29434
1.382–1A Redesignated from 1.382(a)–1; heading revised 29433
1.382–2A Redesignated from 1.382(b)–1; heading revised 29433
1.382–3A Redesignated from 1.382(c)–1; heading revised 29433
1.382–4A Redesignated from 1.382–2; heading revised 29433
1.383–0 Added 29434
1.383–1 Redesignated as 1.383–1A; new 1.383–1 redesignated from 1.383–1T; (a), (c)(2)(ii), (3)(i)(B), (ii)(B), (4), (d)(2)(iii), (e)(4)(i), (ii) and (g) amended 29434
1.383–1T Redesignated as 1.383–1 29434
(k) redesignated from 1.382–2T (a)(2)(iv); (k) heading revised; (k)(1) amended; nomenclature change 29435
1.383–2 Redesignated as 1.383–2A 29434
Redesignated from 1.383–2T; heading amended 29435
1.383–2T Redesignated as 1.383–2 29435
1.383–3 Redesignated as 1.383–3A 29434
Correctly redesignated as 1.383–3A 52120
1.383–1A Redesignated from 1.383–1; Heading revised; amended 29434

26 CFR—Continued

56 FR Page

Chapter I—Continued
1.383–2A Redesignated from 1.383–2; Heading revised; amended 29434
1.383–3A Redesignated from 1.383–3; Heading revised; amended 29434
Correctly redesignated from 1.383–3 52120

1992

26 CFR

57 FR Page

Chapter I
1.337(d)–1 (a)(5) Example 8 amended 53550
1.337(d)–2 (c)(1)(i) introductory text amended 53550
1.355–2 (d)(3)(iv) amended 28463
1.367(b)–2 Added 6555
1.367(b)–7 Added 6555
1.367(b)–8 Added 6555
1.367(b)–9 Added 6556
1.382–1 Removed; new 1.382–1 redesignated from 1.382–1T; heading and introductory text revised 45711
1.382–1T Redesignated as 1.382–1 45711
1.382–2 (a)(3) added 10740
(a)(3)(ii) *Example* 2 and *Example* 3 corrected 24188
Heading revised; (a)(3) redesignated as 1.382–3 (a)(1) 45712
1.382–2T (f)(7) revised; (g)(4) *Example 5* added 10741
(h)(4)(x)(J) added 12210
(j)(2)(iii)(A) amended 38282
(f)(7), (g)(4) *Example* 5, (h)(4)(x)(J) and (j)(2)(iii)(A) amended; (h)(4)(x)(Z) revised 45712
(f)(7) corrected 52827
1.382–3 Added 346
1.382–3 (e) and (o) added 12210
Redesignated as 1.382–9; new 1.382–3 redesignated from 1.382–4; (a) heading and (2) added; (a)(1) redesignated from 1.382–2 (a)(3); (a)(1) introductory text, *Example* 1, *Example* 2, *Example* 3, (iii)(A), (B), (C) and (k)(2)(ii) amended 45712
(a)(1)(ii) *Example* 1 corrected 52827
1.382–4 Added 38282
Redesignated as 1.382–3 45712

26 CFR—Continued

57 FR Page

Chapter I—Continued
Added 45713
1.382–5 Added 45713
1.382–6 Added 45713
1.382–7 Added 45713
1.382–8 Added 45713
1.382–9 Redesignated from 1.382–3 45712
(o)(2) amended 45713
1.382–10 Added 45713
1.382–11 Added 45713
Heading corrected 52827
1.383–0—1.383–2 CFR correction 39359
1.383–2 (c) correctly designated from 1.383–2T; CFR correction 39359
1.383–2T Correctly designated as 1.383–2; CFR correction 39359

1993

26 CFR

58 FR Page

Chapter I
1.301-1 (n) removed 25557
1.305-1 Removed 25557
Corrected 26524
1.311-1 Removed 25557
1.311-2 Removed 25557
1.333-1 Removed 25557
1.333-2 Removed 25557
1.333-3 Removed 25557
1.333-4 Removed 25557
1.333-5 Removed 25557
1.333-6 Removed 25557
1.334-1 (c) removed 25557
1.334-2 Removed 25557
1.336-1 Removed 25557
1.337-1 Removed 25557
1.337-2 Removed 25557
1.337-3 Removed 25557
1.337-4 Removed 25557
1.337-5 Removed 25557
1.337-6 Removed 25557
1.358-5 Removed 25557
1.367(e)–0T Removed 5929
1.367(e)–0 Added 5930
1.367(e)–1T Removed 5929
1.367(e)–1 Added 5930
(c)(3)(ii)(B) corrected 11099
1.382-0 Removed 25557
1.382-1 Amended 51573
1.382-1A Removed 25557
1.382-2A Removed 25557
1.382-2T (j)(2)(iii)(B)(*1*), (D)(*1*) and (F)(*1*) amended 51573

26 CFR—Continued

58 FR Page

Chapter I—Continued
1.382-3 (j) added 51573
1.382-3A Removed 25557
1.382-4A Removed 25557

1994

26 CFR

59 FR Page

Chapter I
1.304-5 Added 2960
1.337(d)–1 (a)(5) introductory text amended 41674
(a)(5) *Example 8* amended 41675
1.337(d)–2 (c)(4) *Example* amended 41674
1.338-0 Added 2960
1.338-1 Added 2963
1.338-1T Removed 2960
1.338-2 Added 2966
1.338-2T Removed 2960
1.338-3 Added 2969
1.338-3T Removed 2960
1.338-4 Added 2972
1.338-4T Revised 2957
1.338–4T (h)(4) corrected 15501
1.338-5 Added 2978
1.338-5T Removed 2960
1.338-6T Removed 2960
1.338(b)-1 Added 2979
1.338(b)-1T Removed 2960
1.338(b)-2T (a)(3) removed 2960
(a)(2) revised; (d) *Example* (*1*) amended 2981
(c)(2), (3)(i), (ii), (d) introductory text and *Example* 2 amended 2984
1.338(b)-3T (b) revised 2981
(a)(1), (g)(1)(i), (h)(1)(ii) and (j) *Examples* 4, 6 and 7 amended 2984
1.338(b)-4T Removed 2960
1.338(h)(10)-1 Added 2981
1.338(h)(10)-1T Removed 2960
1.338(i)-1 Added 2984
1.367(a)-4T (b)(4) removed 2960
1.382-1 Amended 12835, 12842, 12846, 32080
1.382-2 (a)(1)(i)(B) revised; (a)(3), (4) and (b) added 12836
1.382-2T (a)(2)(i) heading revised; (a)(2)(i)(B) and (f)(18)(iii) amended; (h)(4)(x)(Z) removed; (h)(4)(xiii), (m)(4)(vi) and (vii) added 12837
1.382-4 Revised 12837

26 CFR—Continued

59 FR Page

Chapter I—Continued
1.382-6 Heading revised; text added 32080
1.382-9 (o)(1) revised 12840
(i) through (l), (m)(2), (n) and (p) added 12843
(a) and (e)(1) amended; (d) added 12846

1995

26 CFR

60 FR Page

Chapter I
1.301–1 (d)(1)(iii), (h)(2)(ii)(*b*) and (j)(1) amended 2500
1.305–3 (e) *Examples 1* through *15* amended; *Example 15* revised 66136
1.305–5 (d) *Examples 1* through *9* amended; (b) and (d) *Examples 4, 5* and *7* revised; (d) *Examples 8* and *9* redesignated as (d) *Examples 9* and *10*; new (d) *Example 8* and (e) added 66136
1.305–7 (a) amended 66138
1.312–3 Amended 2500
1.337(d)–1 (a)(5) *Example 8* amended 36679
1.337(d)–2 (g)(1) amended 36679
1.338–0 Amended 54944
1.338–2 (c)(3) added 54944
1.338–4 (f)(4) *Example 2* amended 36679
1.341–6 (b)(1), (2)(i), (iii), (3), (h)(4) and (n) amended 2500
1.341–7 (e)(10) amended 36679
1.358–2(d) Removed 66079
1.358–6 Added 66079
1.367(a)–3T (a), (c) through (f), (g)(1) and (h)(1) revised 66743

1996

26 CFR

61 FR Page

Chapter I
1.351–1 (a)(3) added 19189
(c)(6) redesignated as (c)(7); new (c)(6) added 19545
1.358–6 (c)(4) *Example 2* corrected 11547
1.367(a)–3 Added 68637
1.367(a)–3T (a), (c) and (d) revised 68641
1.367(a)–7T Removed 515
1.367(e)–0 Removed 42169

26 CFR—Continued

61 FR Page

Chapter I—Continued

1.367(e)–0T Added 42169
1.367(e)–1 Removed 42169
1.367(e)–1T Added 42169
1.382–1 Amended 33314
1.382–2 (a)(1)(iv) added; (f)(18)(i) redesignated as (a)(3)(i); (a)(1)(iii) and new (3)(i) amended 33315
1.382–2T (e)(2)(iv) Example 1, 2, (f)(4), (5), (18)(i) and (h)(2)(i)(A) amended; (f)(1) redesignated as (f)(1)(i); new (f)(1)(i) heading, (ii) and (iii) added 33315
1.382–5T Added 33316
1.382–8T Added 33316
1.383–1A Undesignated center heading and section removed 515
1.383–2A Removed 515
1.383–3A Removed 51

1997

26 CFR

62 FR Page

1.302–2 (c) introductory text amended 38028
1.338–0 Amended 2268, 3459
1.338–3 (b)(4) revised; (d)(8)(ii) Examples 1 through 4 amended 2268
1.338–4 (a)(5), (c)(4), (d)(2)(iii), (g)(2) and (j)(3)(i)(A)(2) amended; (h) revised 3459
1.338–4T Removed 3461

26 CFR—Continued

62 FR Page

1.338(b)–2T (b)(2), (c)(1) and (3)(iii) revised; (c)(4) added; (d) Example 1 and 2 amended 2269
1.338(b)–3T (e)(1), (f)(1) and (2) revised; (j) amended 2270
1.338(i)–1 (a) and (b) revised 3461

1998

(Regulations published January 1, 1998 through April 1, 1998)

26 CFR

63 FR Page

1.338–2 (c)(3)(ii) revised; (c)(3)(iv)(B) amended 4178
1.354–1 (d) amended; (d) Example 4 added; (e) revised 410
1.355–1 (b) amended; (c) added 410
1.356–3 (b) redesignated as (c); new (b) added; new (c) amended 410
1.356–6T Added 411
1.368–1 (d)(1) removed; (d)(2), (3) and (4) redesignated as (d)(1), (2) and (3); (a), (b), new (d)(1), (5) introductory text and Examples 1 through 5 amended; new (d)(4) and (5) Examples 6 through 12 added 4178
1.368–1T Added 4185
1.368–2 (j)(3)(ii) revised; (j)(3)(iv) and (k) added; (j)(4) removed; (j)(5), (6) and (7) redesignated as (j)(4), (5) and (6); (a), (f), (j)(1), (3)(iii) and new (6) Examples 1 through 9 amended 4182